H04L

TRANSMISSION OF DIGITAL INFORMATION, e.g. TELEGRAPHIC COMMUNICATION (typewriters B41J; order telegraphs, fire or police telegraphs G08B; visual telegraphy G08B, G08C; teleautographic systems G08C; ciphering or deciphering apparatus per se G09C; coding, decoding or code conversion, in general H03M; arrangements common to telegraphic and telephonic communication H04M; selecting H04Q)

Definition statement

This place covers:

Transmission of signals having been supplied in digital form, e.g. data transmission, telegraphic communication, or methods or arrangements for monitoring.

As the scope of H04L covers a diversity of subject matter, the user is referred to the definitions for the main groups of H04L. The following list is intended to assist the user.

Systems:

- characterised by the code used, e.g. Morse or Baudot; details, see definition for groups H04L 15/00, H04L 17/00, H04L 13/00;
- step by step systems, see definition for group H04L 19/00;
- mosaic printer telegraph systems, see definition for group H04L 21/00;
- systems not covered by H04L 15/00-H04L 21/00, see definition for group H04L 23/00;
- baseband systems, see definition for group H04L 25/00;
- modulated carrier systems, see definition for group H04L 27/00;
- data switching networks, see definition for group H04L 12/00.

Arrangements of general application:

- security: errors; secrecy, see definition for groups H04L 1/00 H04L 9/00;
- multiple communications, see definition for groups H04L 5/00 H04L 7/00;
- other arrangements, apparatus or systems, see definition for group H04L 29/00.

network architectures or network communication protocols for network security H04L 63/00

References

Limiting references

This place does not cover:

Arrangements applicable to telegraphic or telephonic communication	H04M

Informative references

Attention is drawn to the following places, which may be of interest for search:

Typewriters	B41J
Order telegraphs, fire or police telegraphs	G08B
Visual telegraphy	G08B, G08C
Teleautographic systems	G08C
Ciphering or deciphering apparatus per se	G09C
Coding, decoding or code conversion, in general	H03M

Spread spectrum techniques in general	H04B 1/69
Selecting	H04Q

H04L 1/00

Arrangements for detecting or preventing errors in the information received (correcting synchronisation H04L 7/00; {for digital computers G06F 11/00} ; arrangements in the transmission path H04B)

Definition statement

This place covers:

Codes for error detection or error correction, i.e. theoretical code construction and coding circuit architecture designs are classified in H04M 13/00; the application of such codes in transmission systems is covered by H04L 1/00 subgroups.

References

Limiting references

This place does not cover:

Codes for error detection or error correction per se, i.e. theoretical code construction and coding circuit architecture designs	H03M 13/00
Transmission	H04B

Informative references

Attention is drawn to the following places, which may be of interest for search:

Error correction in synchronization	H04L 7/00
Computer systems	G06F
Error correction or detection in electrical digital data processing	G06F 11/00 - G06F 11/20
Coin-feed or like apparatus with coded identity card or credit card	G07F 7/08
Error correction in speech coding	G10L 19/005
Diversity Systems for radio transmission systems	H04B 7/02
Error detection and correction for transmission of compressed video (e.g. MPEG)	H04N 19/89, H04N 21/2383

Special rules of classification

Classification into the main group H04L 1/00 itself should be avoided and instead its relevant subgroups should be used by identifying the particular error technique used. If no other group can be assigned for error control applicable to transmission systems, then it may be assigned to this main group.

In addition an Indexing Code can be given under H04L 2001/0092 for network topology, which is of interest to H04L 1/00.

Synonyms and Keywords

In patent documents, the following abbreviations are often used:

AM	Acknowledged Mode

AMC	Adaptive Modulation and Coding
AMR	Adaptive Multirate
ARQ	Automatic Repeat reQuest
BCCH	Broadcast Control Channel
BCH	Broadcast Channel
BER	Bit Error Rate
BLER	Block Error Rate
BPSK	Binary Phase Shift Keying
BW	Bandwidth
C-RNTI	Cell Radio Network Temporary Identity
CDMA	Code Division Multiple Access
CE	Cyclic Extension
CP	Cyclic Prefix
CQI	Channel Quality Indicator
CRC	Cyclic Redundancy Check
CSI	Channel State Information
DCCH	Dedicated Control Channel
DCI	Downlink Control Information
DFT	Discrete Fourier Transform
DL	Downlink
DL-SCH	Downlink Shared Channel
DRA	Dynamic Resource Allocation
DRX	Discontinuous Reception
DTCH	Dedicated Traffic Channel
DTX	Discontinuous Transmission
E-UTRA	Evolved UMTS Terrestrial Radio Access
E-UTRAN	Evolved UMTS Terrestrial Radio Access Network
EPC	Evolved Packet Core
FDD	Frequency Division Duplex
FDM	Frequency Division Multiplexing
FDMA	Frequency Division Multiple Access
FEC	Forward Error Correction
H-ARQ	Hybrid ARQ
HSDPA	High Speed Downlink Packet Access
HSUPA	High Speed Uplink Packet Access
IP	Internet Protocol
IPSec	Internet Protocol Security
LTE	Long Term Evolution
MAC	Medium Access Control
MAC	Message Authentication

NACK	Negative ACK
NAS	Non-Access Stratum
OFDM	Orthogonal Frequency Division Multiplexing
PAPR	Peak-to-Average Power Ratio
PDCCH	Physical Dedicated Control Channel
PDCP	Packet Data Convergence Protocol
PHICH	Physical Hybrid ARQ Indicator Channel
PUCCH	Physical Uplink Control Channel
PUSCH	Physical Uplink Shared Channel
QAM	Quadrature Amplitude Modulation
QPSK	Quadrature Phase Shift Keying
RRC	Radio Resource Control
SDMA	Space (or Spatial) Division Multiple Access
SIMO	Single Input Multiple Output
SIP	Session Initiation Protocol
SIR	Signal-to-Interference Ratio
STC	Space Time Coding
UEP	Unequal error protections
UM	Unacknowledged Mode
VoIP	Voice over Internet Protocol
WCDMA	Wideband Code Division Multiple Access

H04L 1/0001

{Systems modifying transmission characteristics according to link quality, e.g. power backoff (adaptive data allocation for multicarrier modulation H04L 5/0044; controlling transmission power for radio systems H04W 52/04)}

Definition statement

This place covers:

General link adaptation techniques, including power control for non-radio links, and handshaking procedures involving link adaptation.

References

Limiting references

This place does not cover:

Splitting-up the transmission path, e.g. time, frequency etc.	H04L 5/0001
Allocating sub-channels of the transmission path	H04L 5/003
Allocation of payload for multicarrier modulation system	H04L 5/0044
Negotiation of transmission parameters unrelated to channel quality	H04L 5/1438
Adaptation of equalizers (attention: Indexing Code)	H04L 25/03019, H04L 2025/03535

Transmit line pre-equalization, e.g. precoding, MIMO calibration	H04L 25/03343
Multichannel equalizers (attention: Indexing Code)	H04L 2025/03426
Adaptation of timing of transmitters in a network	H04J 3/06
Mode change for facsimile transmission	H04N 1/3333
Network traffic and resource management	H04W 28/00
Communication route selection based on channel quality	H04W 40/12
Control of transmission power in radio systems	H04W 52/04
Wireless resource allocation	H04W 72/04

Special rules of classification

Adaptive techniques are covered by specific subgroups under H04L 1/0001 unless they are other aspects, e.g. frequency hopping, adaptive slew rate, adaptive interleaving, DSL power back-off.

ARQ adaptive retransmission aspects should be classified mainly under the H04L 1/16, H04L 1/18 subgroups.

H04L 1/0002

{by adapting the transmission rate}

Definition statement

This place covers:

The end raw rate at which bits are transmitted through the channel, e.g. after encoding.

References

Limiting references

This place does not cover:

Management of data rate of a bus	H04L 12/4013
Network nodes adapting their rate to physical link properties	H04L 12/40136
Allocation of payload for multicarrier modulation system	H04L 27/2608
Network congestion	H04L 47/25 , H04L 47/26
Negotiation of communication rate in wireless communication systems	H04W 28/22
Power control taking into account the transmission rate	H04W 52/267

H04L 1/0003

{by switching between different modulation schemes}

Definition statement

This place covers:

Also adaptive CDMA and direct sequence spread spectrum is covered by this subgroup.

References

Limiting references

This place does not cover:

Management of data rate of a bus	H04L 12/4013
Network nodes adapting their rate to physical link properties	H04L 12/40136
CDMA system aspects	H04B 1/00
Negotiation of communication rate in wireless communication systems; network traffic / resource management	H04W 28/22

Special rules of classification

Adaptation of modulation is classified in H04L 1/0003 even if line bitrate remains constant, e.g. switch-over from 8-QAM to 8-PSK.

Adaptation of modulation and coding schemes (MCS/AMR) are classifed also under H04L 1/0009.

Particular ARQ physical mapping aspects should be classified mainly under the H04L 1/1893 or H04L 1/1861.

H04L 1/0004

{applied to control information}

Special rules of classification

If the adaptation concerns both control and payload then only H04L 1/0003 is used.

H04L 1/0005

{applied to payload information}

Special rules of classification

If the adaptation concerns both control and payload then only H04L 1/0003 is used.

H04L 1/0006

{by adapting the transmission format}

Definition statement

This place covers:

This group covers adaptive formatting aspects, e.g. adaptive slot allocation, or adaptive packet formats other than coding.

References

Limiting references

This place does not cover:

Adaptation of format of signaling	H04L 1/0029
Channel / frequency assignment	H04W 72/00

H04L 1/0007

{by modifying the frame length}

Definition statement

This place covers:

Frame or packet length adaptation at lower OSI layers.

References

Limiting references

This place does not cover:

Maximum packet size (MTU) for TCP/IP	H04L 47/36

H04L 1/0009

{by adapting the channel coding (H04L 1/1812 takes precedence)}

Definition statement

This place covers:

Also switching between uncoded and coded modes.

References

Limiting references

This place does not cover:

Adapting channel coding for congestion	H04L 47/38
Unequal or adaptive error correction protection	H03M 13/35

Special rules of classification

ARQ redundancy schemes are classified under the subgroups of H04L 1/1812.

Repetition coding per se is classified also in H04L 1/08; other types of codes under the subgroups of H04L 1/004.

Adaptation of space-time coded transmissions, in particular modification of the space-time matrix is classified under the subgroups of H04L 1/0618.

Adaptation of modulation and coding schemes (MCS) are classified also under H04L 1/0003.

H04L 1/001

{applied to control information}

Special rules of classification

If the adaptation concerns both control and payload then only H04L 1/0009 is used.

H04L 1/0011

{applied to payload information}

Special rules of classification

If the adaptation concerns both control and payload then only H04L 1/0009 is used.

H04L 1/0013

{Rate matching, e.g. puncturing or repetition of code symbols}

Definition statement

This place covers:

The coding rate must be adapted in rate matching operations for link adaptation.

Special rules of classification

Use of multiple puncturing patterns is covered by H04L 1/0068; general rate matching without regard to link quality is covered H04L 1/0067.

H04L 1/0014

{by adapting the source coding}

References

Limiting references

This place does not cover:

Adaptive speech coding per se, no transmission involved	G10L 19/00
Adaptive video coding per se, no transmission involved	H04N 19/10

H04L 1/0015

{characterised by the adaptation strategy}

Definition statement

This place covers:

This class is used for special adaptation strategies for adopting a transmission mode, e.g. select an MCS mode, which do not fall within its subclasses. For example, use of special utility or cost functions is classified here.

H04L 1/0016

{involving special memory structures, e.g. look-up tables}

Definition statement

This place covers:

This class is used for uncommon memory structures, e.g. switching tables, look-up tables and the like.

H04L 1/0017

{where the mode-switching is based on Quality of Service requirement}

Definition statement

This place covers:

Guarantee of QoS and interaction of QoS parameters of higher layers and of the physical and data link layers. Adaptation takes into account types of data, e.g. real-time data.

References

Limiting references

This place does not cover:

Wireless network traffic management	H04W 28/02

H04L 1/0018

{based on latency requirement}

Special rules of classification

Latency aspects per se should be classified only here and not in any higher subgroups.

H04L 1/0019

{in which mode-switching is based on a statistical approach}

Definition statement

This place covers:

Special statistical approaches for mode-switching including future system or channel conditions mode-switching decision, e.g. calculation of confidence intervals or sequential testing for early decisions.

H04L 1/002

{Algorithms with memory of the previous states, e.g. Markovian models}

Definition statement

This place covers:

Algorithms explicitly using Markov chains.

H04L 1/0021

{in which the algorithm uses adaptive thresholds}

Definition statement

This place covers:

Algorithms in which the adaptation thresholds themselves are adapted according to e.g. state of transmitter or receiver.

H04L 1/0022

{in which mode-switching is influenced by the user}

Definition statement

This place covers:

E.g. during the negotiation phase.

References

Limiting references

This place does not cover:

Re-negotiation phase of parameters unrelated to channel quality	H04L 5/1438

H04L 1/0023

{characterised by the signalling}

Definition statement

This place covers:

Signaling conveying adaptation commands or channel quality indicators, scheduling and formatting aspects thereof.

References

Limiting references

This place does not cover:

Signaling for administration of a divided path	H04L 5/0091
MIMO systems with feedback	H04B 7/0417
Antenna switching / beamforming based on receiver feedback	H04B 7/061, H04B 7/0619
Monitoring or testing of receivers with feedback of measurements to the transmitter	H04B 17/24
Measuring or estimating channel quality parameters	H04B 17/309

Special rules of classification

The appropriate sub-group should be assigned and the main sub-class be avoided.

Signal quality per se is classified in H04L 1/20.

H04L 1/0025

{Transmission of mode-switching indication}

Definition statement

This place covers:

Both for forward and reverse direction.

H04L 1/0026

{Transmission of channel quality indication}

References

Limiting references

This place does not cover:

Monitoring or testing of receivers with feedback of measurements to the transmitter	H04B 17/24

H04L 1/0028

{Formatting}

Definition statement

This place covers:

How the actual signaling is conveyed.

Special rules of classification

The appropriate sub-group should be assigned and the main sub-class be avoided. Mere error control coding of signaling is not assigned by this class.

H04L 1/0029

{Reduction of the amount of signalling, e.g. retention of useful signalling or differential signalling (power control H04W 52/04)}

References

Limiting references

This place does not cover:

Wireless Transmission Power Control	H04W 52/04

Special rules of classification

Protection of CQI (channel quality indicator) or TFCI (or transport format combination indicator) with error control is classified in H04L 1/0072.

H04L 1/0031

{Multiple signaling transmission (H04L 1/1664, F15 take precedence)}

References

Limiting references

This place does not cover:

Details of the supervisory signal being transmitted together with payload signals; piggybacking	H04L 1/1664

Systems acting by means of fluids in general; Fluid-pressure actuators, e.g. servo-motors; Details of fluid-pressure systems, not otherwise provided for	F15

Special rules of classification

The class should not be assigned if the commands include an acknowledgement indication.

Piggybacked acknowledgements or transmission of command with acknowledgement indication is classified in H04L 1/1664 , H04L 1/1671 .

H04L 1/0032

{Without explicit signalling}

Special rules of classification

Implicit signaling is not classified here either but in relevant subgroups under H04L 1/0033, H04L 1/0036.

H04L 1/0033

{arrangements specific to the transmitter}

Definition statement

This place covers:

Specific parameters of transmitter aspects, i.e. circuit or computer-based implementation, e.g. amplifying circuit, etc. according to channel quality.

Special rules of classification

The class should be assigned only if its subclass is not relevant.

H04L 1/0034

{where the transmitter decides based on inferences, e.g. use of implicit signalling}

Definition statement

This place covers:

Mode switching based on ACK/NACK indications (ACK/NACKs are used as derivative channel quality indicators).

H04L 1/0036

{arrangements specific to the receiver}

Definition statement

This place covers:

Specific parameters of receiver aspects, i.e. circuit or computer-based implementation, e.g. demodulator, etc. according to channel quality.

Special rules of classification

The class should be assigned only if any subclass is not relevant.

H04L 1/0038

{Blind format detection (for detection of modulation format H04L 27/0012)}

References

Limiting references

This place does not cover:

Identification of modulation type	H04L 27/0012
CDMA code identification	H04B 1/707

H04L 1/0039

{other detection of signalling, e.g. detection of TFCI explicit signalling (H04L 1/0046, H04L 27/0012 and H04L 25/0262 take precedence)}

References

Limiting references

This place does not cover:

Code rate detection or code type detection	H04L 1/0046
Arrangements for detecting the data rate of an incoming signal	H04L 25/0262
Arrangements for identifying the type of modulation	H04L 27/0012

Special rules of classification

Code rate detection of code type detection are classified in H04L 1/0046.

H04L 1/004

{by using forward error control (H04L 1/0618 takes precedence; coding, decoding or code conversion, for error detection or correction H03M 13/00)}

Definition statement

This place covers:

Application of FEC codes in transmission systems.

References

Limiting references

This place does not cover:

Space-time coding	H04L 1/0618
Error correction in synchronization	H04L 7/00
Error correction or detection in electrical digital data processing	G06F 11/00 - G06F 11/20
Error correction in speech coding	G10L 19/005
Error detection/correction (code construction per se, coding and decoding architectures)	H03M 13/00
Codes for error detection or error correction per se	H03M 13/00

Error correction for video transmission (e.g. MPEG)	H04N 19/89

Special rules of classification

Adaptive FEC is classified in H04L 1/0009.

Space-time/frequency coding/decoding is classified in H04L 1/0618, H04L 1/0606

Repetition coding is classified in H04L 1/08.

Hybrid ARQ redundancy schemes (ARQ combined with FEC) are classified under the subgroups of H04L 1/1812.

H04L 1/0041

{Arrangements at the transmitter end}

Definition statement

This place covers:

Hardware circuit design or functional computer-implemented arrangements.

H04L 1/0042

{Encoding specially adapted to other signal generation operation, e.g. in order to reduce transmit distortions, jitter, or to improve signal shape (H04L 1/0067 takes precedence)}

Definition statement

This place covers:

The FEC encoding operation is specifically designed by taking into account other signal generation operations (e.g. properties of the modulator or local oscillator).

References

Limiting references

This place does not cover:

Rate matching	H04L 1/0067
For PSK signal shaping, e.g. trellis shaping, coset coding	H04L 27/186
QAM signal shaping, e.g. trellis shaping, coset coding	H04L 27/3416

Special rules of classification

Classes H04L 1/0058, H04L 1/006, H04L 1/0067 are considered first before giving the above subclass.

H04L 1/0045

{Arrangements at the receiver end}

Definition statement

This place covers:

Hardware circuit design or functional computer-implemented arrangements.

H04L 1/0046

{Code rate detection or code type detection (H04L 1/0038 takes precedence; detection of the data rate H04L 25/0262; for packet format H04L 1/0091)}

References

Limiting references

This place does not cover:

Blind format detection	H04L 1/0038
Packet format detection	H04L 1/0091
Data rate detection	H04L 25/0262

Special rules of classification

Adaptive code rate or code type detection is classified in H04L 1/0038.

Packet format detection is classified in H04L 1/0091.

H04L 1/0047

{Decoding adapted to other signal detection operation (in conjunction with sequence estimation or equalization H04L 25/03286)}

Definition statement

This place covers:

The FEC encoding operation is specifically designed by taking into account other signal generation operations (e.g. properties of the demodulator, sensitivity to errors of later signal processing stages).

References

Limiting references

This place does not cover:

Sequence estimation or equalization	H04L 25/03286

H04L 1/0048

{in conjunction with detection of multiuser or interfering signals, e.g. iteration between CDMA or MIMO detector and FEC decoder (for spatial equalizer H04L 25/03286)}

References

Limiting references

This place does not cover:

Synchronization based on error correcting/detecting codes	H04L 7/048
with channel-decoding circuitry	H04L 25/03286
In conjunction with spatial equalization	H04L 25/03343, H04L 2025/03426

H04L 1/005

{Iterative decoding, including iteration between signal detection and decoding operation}

References

Limiting references

This place does not cover:

Turbo equalization	H04L 25/03171
Turbo coding and decoding per se	H03M 13/2957

H04L 1/0054

{Maximum-likelihood or sequential decoding, e.g. Viterbi, Fano, ZJ algorithms}

References

Limiting references

This place does not cover:

Sequence estimation, e.g. Viterbi decoding arrangements	H03M 13/39 - H03M 13/41

H04L 1/0056

{Systems characterized by the type of code used (H04L 1/08 takes precedence)}

References

Limiting references

This place does not cover:

By repeating transmission, e.g. Verdan system	H04L 1/08

Special rules of classification

Repetition coding is classified in H04L 1/08.

H04L 1/0057

{Block codes (H04L 1/0061, H04L 1/0064 take precedence)}

Definition statement

This place covers:

Block codes such as Reed-Solomon codes, LDPC codes, etc.

References

Limiting references

This place does not cover:

Error detection codes	H04L 1/0061
Concatenated codes	H04L 1/0064

Special rules of classification

Classes H04L 1/0061 and H04L 1/0064 take precedence.

H04L 1/0058

{Block-coded modulation}

References

Limiting references

This place does not cover:

Coded modulation with block coding per se	H03M 13/251

H04L 1/006

{Trellis-coded modulation}

References

Limiting references

This place does not cover:

Coded modulation with trellis coding per se	H03M 13/256

H04L 1/0067

{Rate matching (H04L 1/0013 and H04L 1/08 take precedence)}

References

Limiting references

This place does not cover:

By repeating transmission, e.g. Verdan system	H04L 1/08

Special rules of classification

Adaptive rate matching according to link quality is covered by H04L 1/0013.

Repetition coding is covered by H04L 1/08.

H04L 1/0069

{Puncturing patterns}

Definition statement

This place covers:

Puncturing patterns (adaptive and non-adaptive).

H04L 1/007

{Unequal error protection (for format H04L 1/0078; for codes per se H03M 13/35)}

References

Limiting references

This place does not cover:

Avoidance of errors by organising the transmitted data in a format specifically designed to deal with errors	H04L 1/0078
Unequal error protection	H03M 13/35

Special rules of classification

Unequal error protection formatting arrangements is covered by H04L 1/0086.

General aspects of UEP is covered by old Indexing Code H04L 2001/0098. (not used anymore).

H04L 1/0071

{Use of interleaving (interleaving per se H03M 13/27)}

Definition statement

This place covers:

Use of interleavers, which interchange data elements in the time domain in transmission systems.

Relationships with other classification places

Diversity arrangements, see H04L 1/02.

References

Limiting references

This place does not cover:

Assignment of physical channels and/or subcarriers	H04L 5/00, H04L 27/26
Interleaving per se and its memory designs	H03M 13/27
Spatial/frequency diversity for radio communication	H04B 7/02

Special rules of classification

Turbo coding interleavers are not classified here since they are considered integral part of the turbo coder.

Non-adaptive formatting arrangements is covered by H04L 1/0086.

H04L 1/0072

{Error control for data other than payload data, e.g. control data}

Special rules of classification

Adaptive FEC for control data is covered by H04L 1/001.

H04L 1/0073

{Special arrangements for feedback channel}

Definition statement

This place covers:

Details of FEC of feedback such as CQI, ACK.

Special rules of classification

ACK/NACK repetition coding is covered by H04L 1/1858.

H04L 1/0075

{Transmission of coding parameters to receiver (H04L 1/0023 takes precedence)}

Definition statement

This place covers:

Details concerning transmission of FEC related parameters related to signaling information.

Special rules of classification

Transmission of signaling for adaptation purposes is covered by H04L 1/0023.

H04L 1/0076

{Distributed coding, e.g. network coding, involving channel coding (coding in both space and time H04L 1/0618; cooperative diversity H04B 7/022)}

Definition statement

This place covers:

Details of error control at intermediate node, e.g. exclusive OR signal coding or stronger re-encoding arrangements at relay.

References

Limiting references

This place does not cover:

Cooperative diversity	H04B 7/022
Active relay systems	H04B 7/15

Special rules of classification

Coding in both space and time is covered by H04L 1/0618.

Topology aspect is covered by H04L 2001/0097.

H04L 1/0078

{Avoidance of errors by organising the transmitted data in a format specifically designed to deal with errors, e.g. location (forward error control, e.g. FEC, CRC H04L 1/004; adaptive formatting H04L 1/0006; mappings H04L 27/00)}

References

Limiting references

This place does not cover:

Physical mapping	H04L 27/00

Special rules of classification

Adaptive formatting is covered by H04L 1/0006.

FEC coding, e.g. CRC is covered by H04L 1/004.

H04L 1/0079

{Formats for control data (H04L 1/16 takes precedence; training sequences H04L 25/00 and H04L 27/00)}

References

Limiting references

This place does not cover:

By using return channel in which the signals are sent back to the transmitter to be checked	H04L 1/16

Baseband systems	H04L 25/00
Training sequences	H04L 25/0226, H04L 27/2613
Modulated-carrier systems	H04L 27/00

Special rules of classification

Acknowledgement formats is covered by H04L 1/16 and H04L 1/1607.

H04L 1/0082

{fields explicitly indicating existence of error in data being transmitted, e.g. so that downstream stations can avoid decoding erroneous packet; relays}

Special rules of classification

Arrangements for preventing errors in the return channel, e.g. handshaking are covered by Indexing Code H04L 2001/125.

H04L 1/0086

{Unequal error protection (H04L 27/00 and H04L 1/004 take precedence for layer 1/2 aspects, e.g. bit loading)}

References

Limiting references

This place does not cover:

by using forward error control	H04L 1/004
Bit loading is covered by	H04L 5/0046
Constellation mapping aspects	H04L 27/00

Special rules of classification

UEP for coding is covered by H04L 1/007.

General aspects of UEP is covered by old Indexing Code H04L 2001/0098. (not used anymore).

H04L 1/009

{arrangements specific to transmitters}

Definition statement

This place covers:

Hardware circuit design or functional computer-implemented functions.

H04L 1/0091

{arrangements specific to receivers, e.g. format detection (detection of data rate H04L 25/0262; detection of coding rate H04L 1/0046)}

Definition statement

This place covers:

Hardware circuit design or functional computer-implemented functions.

References

Limiting references

This place does not cover:

Data rate detection is covered by	H04L 25/0262.

Special rules of classification

Code rate detection is covered by H04L 1/0046.

H04L 1/02

by diversity reception (in general H04B 7/02)

Definition statement

This place covers:

Space-time coding techniques (i.e. for radio) are classified beneath, see relevant subclasses.

In addition, non-radio diversity arrangements involving redundant, simultaneous signal transmission.

References

Limiting references

This place does not cover:

Radio diversity arrangements (except space-time coded arrangements) are covered by	H04B 7/02

Special rules of classification

The class should be assigned only if any subclass is not applicable.

H04L 1/04

using frequency diversity

References

Limiting references

This place does not cover:

Radio frequency diversity is covered by	H04B 7/12

H04L 1/0612

{Space-time modulation}

Definition statement

This place covers:

Arrangements with constellation plane partitioning taking space-time diversity into account in equivalence to trellis coded modulation in non-diversity schemes.

H04L 1/0618

{Space-time coding}

References

Limiting references

This place does not cover:

Radio space diversity arrangements	H04B 7/06, H04B 7/08

H04L 1/0625

{Transmitter arrangements}

Definition statement

This place covers:

Hardware circuit design or functional computer-implemented arrangement.

H04L 1/0631

{Receiver arrangements}

Definition statement

This place covers:

Hardware circuit design or functional computer-implemented arrangement.

References

Limiting references

This place does not cover:

Sphere detection	H04L 25/03242

H04L 1/0643

{block codes}

Definition statement

This place covers:

Transmitted space-time matrices that are considered each as one block coded entity.

Special rules of classification

For symbol block coding prior to space-time matrix transmission H04L 1/0057.

H04L 1/065

{by means of convolutional encoding}

Special rules of classification

For symbol convolutional coding prior to space-time matrix transmission H04L 1/0059.

H04L 1/0662

{Limited orthogonality systems}

Definition statement

This place covers:

Semi-orthogonal space-time matrix arrangements to increase the transmission rate.

H04L 1/0675

{characterised by the signaling}

Definition statement

This place covers:

Signaling pertaining to the space-time matrix.

Special rules of classification

For normal adaptive transmissions H04L 1/0001.

H04L 1/08

by repeating transmission, e.g. Verdan system {(H04L 1/1858 and H04L 1/189 take precedence)}

References

Informative references

Attention is drawn to the following places, which may be of interest for search:

Adaptive and non-adaptive rate matching	H04L 1/0013, H04L 1/0067
Transmission or retransmission of more than one copy of an acknowledgement message	H04L 1/1858
Transmission or retransmission of more than one copy of a message	H04L 1/189

H04L 1/12

by using return channel

Special rules of classification

Arrangements for preventing errors in the return channel, e.g. handshaking are covered also by Indexing Code H04L 2001/125.

H04L 1/14

in which the signals are sent back to the transmitter to be checked {echo systems}

References

Limiting references

This place does not cover:

Echo cancellation	H04B 3/20

Informative references

Attention is drawn to the following places, which may be of interest for search:

Loop-back testing	H04L 1/243

H04L 1/16

in which the return channel carries supervisory signals, e.g. repetition request signals

References

Limiting references

This place does not cover:

Status reports for improving the reliability of multicast or broadcast data in data switching networks	H04L 12/1863

H04L 1/1621

{Group acknowledgement, i.e. the acknowledgement message defining a range of identifiers, e.g. of sequence numbers}

Definition statement

This place covers:

Explicit indications of ranges of acknowledged data packets, e.g. sequence numbers SN:5 to 16, 23 to 25. Rules may be involved to further compress the sequence number or other signaling.

H04L 1/1628

{List acknowledgements, i.e. the acknowledgement message consisting of a list of identifiers, e.g. of sequence numbers (H04L 1/1614 takes precedence)}

Special rules of classification

Bitmaps where list acknowledgements appear as 0s and 1s are in H04L 1/1614.

H04L 1/18

Automatic repetition systems, e.g. van Duuren system; {ARQ protocols}

References

Limiting references

This place does not cover:

TCP / IP protocols per se	H04L 29/06095

H04L 1/1832

{Details of sliding window management}

References

Limiting references

This place does not cover:

Window size / update for TCP/IP	H04L 12/569

H04L 1/1838

{for semi-reliable protocols, e.g. for less sensitive applications such as streaming video (buffer level management for video bitstream receiver H04N 21/44004)}

References

Limiting references

This place does not cover:

Buffer level management for video bitstream receiver.	H04N 21/44004

H04L 1/1858

{Transmission or retransmission of more than one copy of acknowledgement message (repetition in general H04L 1/08)}

References

Informative references

Attention is drawn to the following places, which may be of interest for search:

Repetition coding in general	H04L 1/08

H04L 1/1861

{Physical mapping arrangements (for ACK signaling see also H04L 5/0053)}

Definition statement

This place covers:

Constellation / mapping rearrangements due to retransmissions, and mapping of receiver-initiated transmissions to resource blocks.

References

Limiting references

This place does not cover:

Allocation of signaling	H04L 5/0053

H04L 1/1864

{ARQ related signaling (H04L 1/1607 takes precedence)}

Special rules of classification

Acknowledgement signaling per se is classified in H04L 1/1607.

H04L 1/187

{Details of sliding window management}

References

Limiting references

This place does not cover:

Window size / update for TCP/IP	H04L 12/569

H04L 1/1877

{for semi-reliable protocols, e.g. for less sensitive applications like streaming video (buffer level management for video bitstream control arrangements H04N 21/44004)}

References

Limiting references

This place does not cover:

Buffer level management for video bitstream receiver	H04N 21/44004

H04L 1/189

{Transmission or retransmission of more than one copy of a message (repetition in general H04L 1/08)}

Special rules of classification

Repetition coding in general H04L 1/08.

H04L 1/1893

{Physical mapping arrangements (physical resource mapping in general H04L 5/00)}

Definition statement

This place covers:

Constellation / mapping rearrangements due to retransmissions, and mapping of transmitter-initiated transmissions to resource blocks.

References

Limiting references

This place does not cover:

Physical resource mapping in general	H04L 5/00

H04L 1/20

using signal quality detector

References

Limiting references

This place does not cover:

Measurement characteristics of individual pulses	G01R 29/02
Measurement of noise, signal-to-noise	G01R 29/26
Measurement of signal quality by testing	G01R 31/31708
Measurement of optical signal-to-noise, bit error rate, quality factor	H04B 10/07953

Measuring or estimating channel quality parameters	H04B 17/309

H04L 1/201

{Frame classification, e.g. bad, good or erased (frame indication per se H04L 1/0082)}

Special rules of classification

Frame indication per se H04L 1/0082.

H04L 1/205

{jitter monitoring}

References

Limiting references

This place does not cover:

Measurement of noise, signal-to-noise	G01R 29/26
Jitter measurement by testing	G01R 31/31709

H04L 1/22

using redundant apparatus to increase reliability {(see G06F 11/08 - G06F 11/20)}

Definition statement

This place covers:

E.g. redundant stand-by links.

References

Limiting references

This place does not cover:

Redundancy in electrical buses	H04L 12/40176
Redundant control systems	G05B 9/03
Error detection / correction	G06F 11/08
Redundant systems in computer networks	G06F 11/16
Switching spare elements	G06F 11/20
Other transmission systems with redundant channels	H04B 1/74

H04L 1/24

Testing correct operation

Definition statement

This place covers:

Testing correct operation.

References

Limiting references

This place does not cover:

Testing / monitoring arrangements	H04L 12/2697, H04L 12/2602
Measurement of non-linear distortion	G01R 23/20
Measuring characteristics of individual pulses, e.g. deviation from pulse flatness, rise time, duration	G01R 29/02
Arrangements for testing circuits and fault location	G01R 31/00
Testing storage memories	G11C 29/00
Testing of line transmission systems	H04B 3/46
Testing for optical arrangements	**H04B10/08**
Testing of transmitters / receivers	H04B 17/00
SDH/SONET monitoring	H04J 3/14
Monitoring / testing of exchanges	H04M 3/22
Testing arrangements for wireless transmission	H04W 24/00

H04L 1/243

{at the transmitter, using a loop-back}

Special rules of classification

Echo systems are in H04L 1/14.

H04L 5/00

Arrangements affording multiple use of the transmission path (multiplex communication in general H04J; {orthogonal multiplex systems H04J 11/00})

Definition statement

This place covers:

Arrangements for dividing a transmission path, for allocating sub-channels, signalling for multiple channel indication and duplex/half-duplex systems.

This group works at the physical layer, for wireless or line communications (ADSL).

The arrangements for dividing the transmission path involve multiple access techniques capable of supporting multiple users by sharing the available system resources. Examples of such multiple-access techniques include Frequency Division Multiple Access (FDMA) systems, Orthogonal FDMA

(OFDMA) systems, multicarrier Code Division Multiple Access (multicarrier CDMA) systems, i.e. any combination of multicarrier signals and a code division.

An OFDM system may implement a radio technology such as Evolved UTRA (E-UTRA), Ultra Mobile Broadband (UMB), IEEE 802.11 (Wi-Fi), IEEE 802.16 (WiMax), IEEE 802.20, Flash-OFDM, etc.

3GPP Long Term Evolution (LTE) is a release of UMTS that uses E-UTRA, which employs OFDM on the downlink and SC-FDMA on the uplink.

References

Limiting references

This place does not cover:

Multicarrier modulation techniques	H04L 27/2626
Multicarrier demodulation techniques	H04L 27/2647
Multicarrier synchronisation aspects	H04L 27/2655
Spread-spectrum techniques	H04B 1/69
Frequency hopping for spread spectrum	H04B 1/713
Spatial multiplexing for diversity systems (the same signal is transmitted by the different antennas).	H04B 7/0697
Time division multiple access (TDMA)	H04J 3/00
Orthogonal CDMA (i.e. using Walsh codes)	H04J 11/00
Code division multiple access (CDMA)	H04J 13/00
Code allocation	H04J 13/16
Wireless communication networks; Local resource management	H04W 72/00

Informative references

Attention is drawn to the following places, which may be of interest for search:

Data switching networks	H04L 12/00
Systems using multi-frequency codes	H04L 27/26
Conditioning for two-way transmission in general	H04B 3/20
Multiplex communication in general	H04J

Special rules of classification

When the multiple access scheme relies on the use of multicarrier signals, and if what is important is how the signal is modulated/demodulated, or "hardware" aspects in the transmitter or the receiver to produce or recover (like synchronisation) such signal or aspects related to the peak power reduction, then the classes under H04L 27/2601 are relevant. Otherwise, to indicate that the signal involved is, for example, an OFDM signal, then the class under H04L 5/0007 is used instead.

Subgroups H04L 5/22, H04L 5/225, H04L 5/24, H04L 5/245, H04L 5/26 are inactive. The classification should be done in H04J 3/00.

Glossary of terms

In this place, the following terms or expressions are used with the meaning indicated:

ADSL	Asymmetric Digital Subscriber Line

DMT	Discrete Multi-Tone
MC-CDMA	Multicarrier CDMA
OFDM	Orthogonal Frequency Division Multiplexing
OFDMA	Orthogonal Frequency Division Multiple Access
SC-FDMA	Single-Carrier Frequency Division Multiple Access
CC	Component Carrier
CoMP	Cooperative Multi-point
FDM	Frequency Division Multiplexing
FDMA	Frequency Division Multiple Access
IFDMA	Interleaved Frequency Division Multiple Access
MIMO	Multiple-Input Multiple-Output
PRB	Physical Resource Block
RA	Resource Allocation
SDMA	Spatial Division Multiple Access
SRS	Sounding Reference Signal
TDD	Time Division Duplex

Synonyms and Keywords

In patent documents, the following words/expressions are often used with the meaning indicated:

"pilot signals"	"Reference Signals" or "training signals" or "sounding signals".
"persistent allocation"	that the resources allocated to the user equipment (UE) are valid until the UE receives another allocation which will then override the previous one. This would typically happen in case the channel conditions have changed (or AMR codec changes) and, thus, the previous allocation would no longer be suitable for the user.

H04L 5/0001

{Arrangements for dividing the transmission path (duplexing H04L 5/14; multiplexing of different sources on one path H04J)}

Definition statement

This place covers:

This group answers the question "How is the transmission path split up?". Since the signals are digital, it is considered that there is always a time dimension, and thus, the minimum number of dimensions is two.

References

Limiting references

This place does not cover:

Two-way operation using the same type of signal	H04L 5/14
Multiplex communication in general	H04J

H04L 5/0007

{the frequencies being orthogonal, e.g. OFDM(A), DMT}

Definition statement

This place covers:

The case of an access method allowing multiple users to share the same frequency band by subdividing the band into orthogonal frequency channels. If the frequencies are not orthogonal then the group H04L 5/0005 should be given instead.

Frequency hopping for multicarrier signals, SC-FDMA and IFDMA are also covered by H04L 5/0007.

H04L 5/0017

{in which a distinct code is applied, as a temporal sequence, to each frequency}

Special rules of classification

This group should contain the cases of spreading codes in the time domain, where chips of the code are applied in sequence, once at a time, to each of the subcarriers.

H04L 5/0019

{in which one code is applied, as a temporal sequence, to all frequencies}

Special rules of classification

This group should contain the cases of spreading codes in the time domain, where each frequency sees the same spreading code (for example, multicarrier DS-CDMA).

H04L 5/0021

{in which codes are applied as a frequency-domain sequences, e.g. MC-CDMA}

Special rules of classification

This group should contain the cases of spreading codes in the frequency domain. Each chip of the spreading code is transmitted through a different subcarrier.

H04L 5/0023

{Time-frequency-space}

Definition statement

This place covers:

The combination OFDM and MIMO; or frequency reuse.

H04L 5/0028

{Variable division (signaling therefor H04L 5/0092)}

Definition statement

This place covers:

Changes from time-frequency to time-frequency-space, for example.

References

Limiting references

This place does not cover:

Indication of how the channel is divided	H04L 5/0092

H04L 5/003

{Arrangements for allocating sub-channels of the transmission path}

Definition statement

This place covers:

Sub-channels are what the path is split up into according to H04L 5/0001.

H04L 5/0032

{Distributed allocation, i.e. involving a plurality of allocating devices, each making partial allocation}

Definition statement

This place covers:

This group answers the question of "Who makes the allocation?". Cooperative allocation (for example in CoMP systems or cognitive radio systems or when dealing with ICIC, Inter-cell Interference Cancellation) is classified under H04L 5/0032, which implies a plurality of base stations that cooperates or exchanges information to perform the allocation.

H04L 5/0037

{Inter-user or inter-terminal allocation}

Definition statement

This place covers:

The allocation for plurality of users, thus, to indicate which user gets what.

H04L 5/0042

{intra-user or intra-terminal allocation}

Definition statement

This place covers:

Single user case, what a single user does with its resources.

H04L 5/0044

{allocation of payload}

Definition statement

This place covers:

Allocation of payload or data in the available subchannels.

H04L 5/0046

{Determination of how many bits are transmitted on different sub-channels}

Definition statement

This place covers:

The case of having different modulations in the different subcarriers.

H04L 5/0048

{Allocation of pilot signals, i.e. of signals known to the receiver}

Definition statement

This place covers:

Pilot or reference signal patterns.

H04L 5/0053

{Allocation of signaling, i.e. of overhead other than pilot signals}

Definition statement

This place covers:

Where (for example, in the time-frequency grid) to send ACK/NacK signals, CQI (Channel Quality Indicator) signals and in general any control signalling which is not a known signal to the receiver (pilots, sounding reference symbols, SRS, or synchronisation signals are known to the receiver and they are classified under H04L 5/0048). In order words, which physical resources are used for signalling.

H04L 5/0064

{Rate requirement of the data, e.g. scalable bandwidth, data priority}

Special rules of classification

According to QoS (Quality of Service) is also classified here.

H04L 5/0078

{Timing of allocation}

Definition statement

This place covers:

The subgroups answer the question "How often the allocation is updated?". For Persistent allocation (if the update is due to channel conditions change, then H04L 5/0085), fixed allocation (H04L 5/008).

H04L 5/0092

{Indication of how the channel is divided}

Definition statement

This place covers:

How the channel is divided, for instance, for indicating that the whole frequency band is divided into a certain number of subcarriers, or that the base station informs the mobile how according to H04L 5/0001 the channel is divided. Both uplink or downlink.

H04L 5/0094

{Indication of how sub-channels of the path are allocated}

Definition statement

This place covers:

The signalling of the Content of the allocation. For example, which carriers are allocated, how many bits are allocated to each subcarrier, etc. Both uplink or downlink.

H04L 5/06

the signals being represented by different frequencies (combined with time-division multiplexing H04L 5/26)

Definition statement

This place covers:

FDM. Different data signals for transmission on a single communications channel are multiplexed, whereby each signal (single carrier) is assigned a non-overlapping frequency range within the main channel.

References

Limiting references

This place does not cover:

combined with the use of different frequencies	H04L 5/26

H04L 5/14

Two-way operation using the same type of signal, i.e. duplex ({duplex repeaters H04L 25/22} ; conditioning for two-way transmission in general H04B 3/20; {for interconnection between telephone switching centres H04Q 3/00})

Definition statement

This place covers:

ADSL systems. FDD systems.

References

Limiting references

This place does not cover:

Repeaters for converting two wires to four wires	H04L 25/22
Reducing echo effects or singing	H04B 3/20
Selecting arrangements	H04Q 3/00

H04L 5/143

{for modulated signals (H04L 5/1469 takes precedence)}

Definition statement

This place covers:

For example, Zipper (a time-synchronised frequency division duplex implementation of discrete multi-tone, DMT, modulation).

H04L 7/00

Arrangements for synchronising receiver with transmitter {(synchronisation of electronic time-pieces G04G 7/00; synchronisation of generators of electric oscillations or pulses H03L; synchronising in TV system H04N 5/04; regeneration of clock signals for television systems H04N 7/0352)}

Definition statement

This place covers:

Bit or symbol synchronization of digital receivers.

Synchronization of packets or bursts in radio or optical transmission.

Bit or symbol synchronization of digital recording system, if this system is not specially adapted to recording.

Bit or symbol synchronization of in a memory system, if the system is not specially adapted to memorizing.

References

Limiting references

This place does not cover:

Synchronization of OFDM	H04L 27/2601
Synchronisation of electronic time-pieces	G04G 7/00
Synchronisation of generators of electric oscillations or pulses	H03L
Synchronization in CDMA	H04B 1/69
Synchronization of frames and in TDM networks, including timestamps	H04J 3/06
Synchronising in TV system	H04N 5/04
Regeneration of clock signals for television systems	H04N 7/0352

Informative references

Attention is drawn to the following places, which may be of interest for search:

Recording	G11B 20/00
Memory systems	G11C
PLL or DLL	H03L 7/00

Glossary of terms

In this place, the following terms or expressions are used with the meaning indicated:

OFDM	Orthogonal Frequency Division Multiplexing
CDMA	Code Division Multiple Access
TDM	Time Division Multiplex
PLL	Phase Locked Loop
DLL	Delay Locked Loop

H04L 7/0004

{Initialisation of the receiver (H04L 7/0075 and H04L 7/10 take precedence)}

Definition statement

This place covers:

Calibration of synchronizers.

Special rules of classification

H04L 7/0075 and H04L 7/10 take precedence.

H04L 7/0008

{Synchronisation information channels, e.g. clock distribution lines}

Definition statement

This place covers:

Source synchronous systems.

Transmission of clock on a dedicated channel, line or link.

Clockwise and counterclockwise clock distribution.

Clock distributed as sinus or standing wave

References

Limiting references

This place does not cover:

Clock distribution in computers or integrated circuits	G06F 1/04
Clock distribution in semiconductor memory systems	G11C

Informative references

Attention is drawn to the following places, which may be of interest for search:

Data over clock	H04L 5/04, H04J 7/00, H04J 9/00

H04L 7/0012

{by comparing receiver clock with transmitter clock}

Definition statement

This place covers:

The received clock is compared with a local clock of the receiver. The comparison controls the synchronisation.

References

Limiting references

This place does not cover:

The data is not used in the detection of the error or in other parts of the synchronisation. Using the received data for synchronization is classified under H04L 7/02 or H04L 7/04.

Special rules of classification

Synchronization of received clock and local clock by PLL or DLL, H03L 7/00 takes precedence.

H04L 7/0016

{correction of synchronization errors}

Definition statement

This place covers:

Correction of the synchronisation error in receiver or transmitter

References

Limiting references

This place does not cover:

Detection of synchronisation error by means of signal transition, e.g. PLL	H04L 7/033

H04L 7/002

{correction by interpolation}

Definition statement

This place covers:

Applies also to clock interpolation in the transmitter for the purpose of synchronisation.

Special rules of classification

If clock interpolation for synchronization is performed at the transmitter, also H04L 7/0091 should be applied.

H04L 7/0025

{interpolation of clock signal}

Definition statement

This place covers:

Covers interpolation of received clock of source synchronous systems.

Covers interpolation of local, e.g. interpolation among several local phase shifted clocks.

References

Informative references

Attention is drawn to the following places, which may be of interest for search:

Selection out of many clock phases for synchronisation, e.g. phase picking, if the control uses transitions of the received data	H04L 7/0337

H04L 7/0029

{interpolation of received data signal}

References

Informative references

Attention is drawn to the following places, which may be of interest for search:

Detection of synchronization error by monitoring at least on equalizer tap weight	H04L 7/0058
Equalizers per se	H04L 25/03
Rate adaption	H04L 25/05
Digital Filters, e.g. FIR Filter	H03H 17/06

Synonyms and Keywords

In patent documents, the following abbreviations are often used:

SRC	Sample Rate Conversion

H04L 7/0033

{Correction by delay}

Definition statement

This place covers:

Delay of other signals than clock or information data, e.g. delay of additional signalling among transmitter and receiver

References

Limiting references

This place does not cover:

Delay of command signals specific for memory systems, e.g. strobe signal DQS	G11C

Informative references

Attention is drawn to the following places, which may be of interest for search:

Selection out of many clock phases for synchronisation, e.g. phase picking, if the control uses transitions of the received data	H04L 7/0337

H04L 7/0037

{Delay of clock signal}

Definition statement

This place covers:

Delay of a received clock signal, e.g. a clock signal received by via a clock line. Delay of a clock signal in the receiver or in the transmitter

References

Limiting references

This place does not cover:

H04L 7/0337 takes precedence if the synchronization makes use of the transitions of the received data signal

H04L 7/0041

{Delay of data signal}

Definition statement

This place covers:

Delay of a received data signal.

Delay of the data signal in the transmitter, e.g. the transmitter receiver an information regarding the synchronisation error.

References

Limiting references

This place does not cover:

H04L 7/0337 takes precedence if the synchronization makes use of the transitions of the received data signal

H04L 7/005

{Correction by an elastic buffer}

Definition statement

This place covers:

An elastic buffer or FIFO is used to compensate the synchronisation error

References

Informative references

Attention is drawn to the following places, which may be of interest for search:

Rate adaption, e.g. from 8 kHz to 9.2 kHz	H04L 25/05
Elastic buffers in computer systems	G06F 5/06
Synchronisation using elastic buffers in time multiplexing systems or packet multiplexing systems	H04J 3/062

Glossary of terms

In this place, the following terms or expressions are used with the meaning indicated:

FIFO	First-In First-Out buffer

H04L 7/0054

{Detection of the synchronisation error by features other than the received signal transition (by means of signal transition H04L 7/033)}

Definition statement

This place covers:

Synchronization by sample processing, e.g. Wave-Difference-Method.

Determination of gradients.

References

Limiting references

This place does not cover:

By means of signal transition	H04L 7/033

Special rules of classification

Synchronization by determining maximum of first derivation of sampled waveform as estimate of zero or threshold crossing: H04L 7/0334 takes precedence.

Synchronization by determining zero of the second derivation of the sampled waveform: H04L 7/007 takes precedence.

H04L 7/0058

{detection of error based on equalizer tap values}

Definition statement

This place covers:

Detection of error by monitoring of equalizer taps, e.g. center tap tracking.

H04L 7/0062

{detection of error based on data decision error, e.g. Mueller type detection}

Definition statement

This place covers:

Error of the data decision, e.g. subtracting input from output of the decision device, to control synchronisation.

Timing Function: Combining of the error with input signals or not decided symbols.

References

Informative references

Attention is drawn to the following places, which may be of interest for search:

Synchronization based on data transition by sample processing of at least three levels, e.g. soft decisions.	H04L 7/0334

H04L 7/0066

{detection of error based on transmission code rule}

Definition statement

This place covers:

Synchronization using properties of line codes like Manchester, PPM or RZ. Synchronization using properties of block codes as 4b/5b.

Also covers violations of such coding rules to transmit synch information.

References

Informative references

Attention is drawn to the following places, which may be of interest for search:

Line coding	H04L 25/4902
Block coding mb/nb	H04L 25/4908

Glossary of terms

In this place, the following terms or expressions are used with the meaning indicated:

PPM	Pulse Position Modulation

H04L 7/007

{detection of error based on maximum signal power, e.g. peak value, maximizing autocorrelation}

Definition statement

This place covers:

Covers SCCL detectors, Sample Correlate Choose Largest.

References

Informative references

Attention is drawn to the following places, which may be of interest for search:

Synchronization by maximum signal power on symbols known to the receiver, e.g. fixed synchronization information or UW. Correlation of UW for synchronization	H04L 7/042

Glossary of terms

In this place, the following terms or expressions are used with the meaning indicated:

UW	Unique Word

H04L 7/0075

{with photonic or optical means}

Definition statement

This place covers:

This group covers clock synchronisation using at least one optical device that is essential for the functioning of the synchronizer. A synchronizer used in an optical transmission system but using exclusively electrical means for synchronization has to be classified in the other respective groups of H04L 7/00.

References

Informative references

Attention is drawn to the following places, which may be of interest for search:

Non-linear optical devices	G02F 1/35
Computer systems or integrated circuits with clock distribution at least partially optical	G06F 1/105
Laser devices	**H01D**
Optical regenerators and retiming, e.g. 2R,3R	H04B 10/29
Optical TDM, alignment of optical frames and time slots	H04J 14/08

Synonyms and Keywords

In patent documents, the following abbreviations are often used:

NOLM	Non-linear Optical Loop Mirror

TOAD	Terahertz Optical Asymmetric Demultiplexer

H04L 7/0079

{Receiver details}

Definition statement

This place covers:

Details in the construction of the synchronizer in the receiver, e.g. adaption of signals among various parts of the receiver; constructional details

References

Informative references

Attention is drawn to the following places, which may be of interest for search:

Details of RF receivers	H04B 1/0003, H04B 1/16

H04L 7/0083

{taking measures against momentary loss of synchronisation, e.g. inhibiting the synchronisation, using idle words or using redundant clocks}

References

Informative references

Attention is drawn to the following places, which may be of interest for search:

Introducing fill or idle bits into the data to maintain synchronization	H04L 2007/045
Error detection or correction of clock faults in computer systems	G06F 11/1604
PLL or DLL with redundancy	H03L 7/07
PLL or DLL with arrangements for protection against power supply fail	H03L 7/14
Fail safe clock arrangements in TDM equipment	H04J 3/0688

Special rules of classification

This class can be applied additionally to any other class in H04L 7/00

H04L 7/0087

{Preprocessing of received signal for synchronisation, e.g. by code conversion, pulse generation or edge detection}

References

Informative references

Attention is drawn to the following places, which may be of interest for search:

Synchronization by spectral filtering	H04L 7/027

H04L 7/0091

{Transmitter details}

Definition statement

This place covers:

The transmitter is adapted to the synchronisation process, e.g. the receiver provides signalling concerning the synchronisation error to the transmitter.

References

Informative references

Attention is drawn to the following places, which may be of interest for search:

Synchronization in computer networks, e.g. Time of Day	G06F 1/04
Buffers between clock domains	G06F 5/06; H04L 7/00

H04L 7/02

Speed or phase control by the received code signals, the signals containing no special synchronisation information {(H04L 7/0075 takes precedence; tuning or selecting resonant circuits H03J; using the properties of error detecting or correcting codes H04L 7/048)}

Definition statement

This place covers:

The error is based on the received code signal.

Synchronisation is achieved by intermediate buffering, multiple phases and/or intermediate clocks. Synchronisation of interfaces or among equipments having different clock phases or clock domains

References

Limiting references

This place does not cover:

with photonic or optical means	H04L 7/0075
using the properties of error detecting or error correcting codes	H04L 7/048
Tuning resonant circuits	H03J

Informative references

Attention is drawn to the following places, which may be of interest for search:

Synchronization based on transition of the received code signal	H04L 7/033
Computer systems with synchronization between clock domains	G06F 1/12
Computer systems with buffering between clock domains	G06F 5/06
Bistable circuits with means to increase reliability, e.g. avoid metastability	H03K 3/0375

H04L 7/027

extracting the synchronising or clock signal from the received signal spectrum, e.g. by using a resonant or bandpass circuit

Definition statement

This place covers:

A spectral line at clock rate of NRZ data can be generated, e.g. by squaring or differentiating and subsequent filtering, e.g. SAW filter or FFT.

Covers detection of synchronization error by measuring a spectral property of a known code signal, e.g. UW or dotting.

References

Informative references

Attention is drawn to the following places, which may be of interest for search:

Repeaters with retiming	H04L 25/242
Manipulating pulses with desired output intervals by the use of time reference signals, e.g. clock signals	H03K 5/135
Manipulating pulses by resonant circuits	H03K 5/145

Synonyms and Keywords

In patent documents, the following abbreviations are often used:

Dotting	Sequence of alternating pulses, e.g. 1010..
UW	Unique Word

H04L 7/033

using the transitions of the received signal to control the phase of the synchronising-signal-generating means, e.g. using a phase-locked loop

Definition statement

This place covers:

PLL with edge detectors, and at least partial analog loop elements, e.g. VCO;

Edge detectors like HOGGE type or ALEXANDER type.

The term "control" does not limit the scope to "tracking" or "closed loop" but includes also feed-forward control.

References

Informative references

Attention is drawn to the following places, which may be of interest for search:

Measuring phase angle between a voltage and a current	G01R 25/00
Transition or edge detectors	H03K 5/1534
PLL or DLL	H03L 7/00

Special rules of classification

Initialization of the PLL is further classified in H04L 7/0004.

Special adaptions for preventing loss of synchronization or loss of lock are also classified in H04L 7/0083

H04L 7/0331

{with a digital phase-locked loop [PLL] processing binay samples, e.g. add/subtract logic for correction of receiver clock (H04L 7/0337 takes precedence)}

Definition statement

This place covers:

This group also covers detection of the synchronization error by measuring the length of the received bits, e.g. by oversampling and sample processing of binary samples.

Covers correction of the synchronization error by add/subtract logic.

Digital implementation of DTTL.

References

Informative references

Attention is drawn to the following places, which may be of interest for search:

Synchronization by integrate/dump	H04L 7/0332
Selection or interpolation among plural phase shifted clocks	H04L 7/0337
Comparing the phase or frequency	H03D 13/00
DPLL in general	H03L 7/099

Special rules of classification

H04L 7/0337 takes precedence

For the pulse length measurement is done by analogue means, e.g. integrate/dump, H04L 7/0332 takes precedence.

Synonyms and Keywords

In patent documents, the following abbreviations are often used:

PWD	Pulse Width Distortion
DTTL	Data Transition Tracking Loop

H04L 7/0332

{with an integrator-detector}

Definition statement

This place covers:

Analogue techniques of determining the synchronization error by measuring a pulse length esp. for line codes with a transition in the bit cell like Manchester coding or NRZI.

Analogue implementation of DTTL.

References

Limiting references

This place does not cover:

Digital implementation of DTTL	H04L 7/0331

Informative references

Attention is drawn to the following places, which may be of interest for search:

Line coding	H04L 25/49

Glossary of terms

In this place, the following terms or expressions are used with the meaning indicated:

DTTL	Data Transition Tracking Loop

H04L 7/0334

{Processing of samples having at least three levels, e.g. soft decisions}

Definition statement

This place covers:

Samples processed of more than binary values, if the processing evaluates a symbol transition.

First and also higher order derivatives of the sampled waveform, if a transition is detected.

Statistical analysis of the samples, e.g. histogram.

References

Limiting references

This place does not cover:

Synchronization by detection of decision error of samples	H04L 7/0062

Informative references

Attention is drawn to the following places, which may be of interest for search:

Demodulators	H04L 27/00

H04L 7/0337

{Selecting between two or more discretely delayed clocks or selecting between two or more discretely delayed received code signals}

Definition statement

This place covers:

The selected phase is looped back into the phase error detection.

Comparison of the actually selected phase with a previously selected phase is not feed backward under this definition. Such a comparison functions as a filter, e.g. for reducing large phase jumps or jitter.

Phase aligners in switches of communication networks or packet receivers.

Phase aligners for electronic displays, e.g. DVI or HDMI interfaces, if the invention is not specially adapted to such a display, e.g. using special signals.

Synchronization by phase picking.

Covers also interpolation among different clock phases.

References

Informative references

Attention is drawn to the following places, which may be of interest for search:

Computer interfaces or busses	G06F 13/40
Electronic displays	G09G
Synchronization in a TDM node	H04J 3/0685

Special rules of classification

Selection in an open loop control: H04L 7/0338 takes precedence.

H04L 7/04

Speed or phase control by synchronisation signals {(H04L 7/0075 takes precedence)}

Definition statement

This place covers:

Documents that only refer to the use of a synchronisation signal, e.g. UW, without further specifying their structure or the way it is detected.

Comma free codes.

Forbidden code words.

Relationships with other classification places

Synchronization signals in TDM frames: H04J 3/0602.

References

Informative references

Attention is drawn to the following places, which may be of interest for search:

Synchronization information for carrier synchronization in demodulators	H04L 2027/0083
Buffers between clock domains	G06F 5/06; H04L 7/00

Special rules of classification

Special synchronisation signals, e.g. midambles or variable UW: H04L 7/041.

Synonyms and Keywords

In patent documents, the following abbreviations are often used:

Dotting	Alternating 1010... sequence or sequence of complex phase reversal, e.g. ABAB constellation points during training of a MODEM
UW	Unique Word as generic synonym for synchronisation data in the received signal.

H04L 7/041

{using special codes as synchronising signal}

Definition statement

This place covers:

Code construction.

Theory of codes used for synchronization.

Training sequences or midambles.

Variable Synchronization codes, e.g. according to synchronization state or for transmission of low rate data like signalling.

References

Limiting references

This place does not cover:

Training sequences for carrier synchronization	H04L 2027/0093
Corresponding special codes for TDM frames	H04J 3/0605

H04L 7/042

{Detectors therefor, e.g. correlators, state machines (digital correlators in general G06F 17/15)}

Definition statement

This place covers:

Cross-correlation or auto-correlation.

Peak detection, threshold control at the output of the correlator.

References

Informative references

Attention is drawn to the following places, which may be of interest for search:

Correlation computing	G06F 17/15
Detectors of FAW in TDM frames	H04J 3/0608
Selective call receivers	H04W 88/022

Special rules of classification

Windowing around expected location of the synchronization information, H04L 7/08 takes precedence.

Synchronization state machines or diagrams for acquisition, search, verify or lock, H04L 7/10 takes precedence.

Synonyms and Keywords

In patent documents, the following abbreviations are often used:

UW	Unique Word. This term is even used even if the bits of the synchronization information could occur in other places of the received data, e.g. mimic in the payload

H04L 7/043

{Pseudo-noise [PN] codes variable during transmission (synchronisation of spread spectrum receivers H04B 1/69)}

Definition statement

This place covers:

PN codes used for synchronisation, if the PN synchronisation signals is varying during transmission, e.g. by a feedback shift-register. Fixed synchronisation signals, e.g. unique words, FAW signals, are not to be classified in this group. This also applies even if the synchronisation signal can be presented as a state of such a PN-code generator. Only if the generator is active and shifts, then the document is classified here.

References

Limiting references

This place does not cover:

Scrambling	H04L 25/03866
Synchronisation of Spread Spectrum receivers	H04B 1/69
PN codes for synchronization of TDM frames	H04J 3/0611

Glossary of terms

In this place, the following terms or expressions are used with the meaning indicated:

PN code	Pseudo-Noise or pseudorandom code
FAW	Frame Alignment Word

H04L 7/044

{using a single bit, e.g. start stop bit}

Definition statement

This place covers:

Synchronization by using a start bit or start/stop bit, incl. the use of the transition of the stop bit to the adjacent start bit.

Covers single synch pulses with differing length from information pulse length.

References

Limiting references

This place does not cover:

Two or more pulses with differing length compared to the length of the data bits	H04L 7/06

Informative references

Attention is drawn to the following places, which may be of interest for search:

Start/Stop transmission in general	H04L 25/38

H04L 7/046

{using a dotting sequence}

Definition statement

This place covers:

Complex phase reversals used for symbol synchronization in digital demodulators.

References

Limiting references

This place does not cover:

Transmission of a dotting sequence without further transmission of user data is a transmission of a clock signal	H04L 7/0008

Informative references

Attention is drawn to the following places, which may be of interest for search:

Detection of dotting by spectral analysis, e.g. filter around basic frequency	H04L 7/027
If the dotting is degraded at the receiver to a sinus	H04L 2007/047
Digital demodulators	H04L 27/00

Glossary of terms

In this place, the following terms or expressions are used with the meaning indicated:

Dotting sequence	Alternating sequence, e.g. 1010... , 01010, ABAB

H04L 7/048

{using the properties of error detecting or error correcting codes, e.g. parity as synchronisation signal}

Definition statement

This place covers:

Use of Error Correcting or detecting codes for alignment of packets or ATM cells.

References

Informative references

Attention is drawn to the following places, which may be of interest for search:

Error Detection or correction codes in general, e.g. ECC or FEC	H04L 1/00
Synchronisation based on error coding or decoding or code conversion	H03M 13/33

Glossary of terms

In this place, the following terms or expressions are used with the meaning indicated:

ATM	Asynchronous Transfer Mode

H04L 7/06

the synchronisation signals differing from the information signals in amplitude, polarity, or frequency {or length}

Definition statement

This place covers:

H04L as such is directed to transmission of digital signals, meaninig the information is transmitted in binary form. Synchronisation signals classified here have a different form than the information signal, e.g. a higher amplitude, a longer pulse width.

References

Informative references

Attention is drawn to the following places, which may be of interest for search:

Detection the differing parameter based on the coding rule	H04L 7/0066
Detection of the differing length by a digital means	H04L 7/0331
Single pulse for synchronization	H04L 7/044
Line codes and detectors therefore	H04L 25/49

H04L 7/065

{and superimposed by modulation}

Definition statement

This place covers:

Synchronisation information is not transmitted in series with the information signals, i.e. as this is the case for packet headers. Instead, a synchronisation signal is provided by modulation of the information signal, e.g. by an amplitude modulation using a low modulation index

References

Informative references

Attention is drawn to the following places, which may be of interest for search:

Amplitude modulation of the synchronization information	H04J 7/00
The synchronization information is multiplexed as a differing type of modulation	H04J 9/00

H04L 7/08

the synchronisation signals recurring cyclically

Definition statement

This place covers:

Detection by windowing around the expected recurring location of the synchronization information.

References

Limiting references

This place does not cover:

Frame synchronization of TDM frames	H04J 3/0602

H04L 7/10

Arrangements for initial synchronisation

Definition statement

This place covers:

Variable synchronization information for initialisation.

During initialisation, variable means of the detector, e.g. low detection threshold and increasing threshold when synchronisation information is detected.

Signalling or handshaking for initialisation.

References

Limiting references

This place does not cover:

Details of the phase-locked loop for assuring initial synchronisation	H03L 7/10

Special rules of classification

Other means for synchronisation, H04L 7/0004 takes precedence.

Start/Stop bit detection, H04L 7/044 takes precedence.

Dotting detection, H04L 7/046 takes precedence.

H04L 9/00

{Cryptographic mechanisms or cryptographic} arrangements for secret or secure communication {(network architectures or network communication protocols for network security H04L 63/00 or for wireless network security H04W 12/00; security arrangements for protecting computers or computer systems against unauthorized activity G06F 21/00)}

Definition statement

This place covers:

Cryptographic mechanisms including cryptographic protocols and cryptographic algorithms, whereby a cryptographic protocol is a distributed cryptographic algorithm defined by a sequence of steps precisely specifying the actions required of two or more entities to achieve specific security objectives (e.g. cryptographic protocol for key agreement), and whereby a cryptographic algorithm is specifying the steps followed by a single entity to achieve specific security objectives (e.g. cryptographic algorithm for symmetric key encryption).

H04L 9/00 focuses on cryptographic mechanisms such as encryption schemes, digital signatures, hash functions, random number generation, key management, said cryptographic mechanisms providing information security such as privacy or confidentiality, data integrity, message authentication, entity authentication, authorization, validation, certification, time-stamping.

H04L 9/00 covers also countermeasures against attacks on cryptographic mechanisms.

Relationships with other classification places

H04L 63/00 Networking architectures and network communication protocols for securing the traffic flowing through data packet networks and providing secure exchanges among applications communicating through data packet networks.

H04L 63/00 covers specifically network architectures and network communication protocols for supporting:

- filtering (e.g. transferring, blocking, dropping) traffic according to security rules;
- authenticating and authorizing the entities sending and/or receiving the traffic;
- protecting the data packets against unauthorized reading or modification;
- detecting intruders and preventing the transmission of unauthorized, malicious or forged packets;
- lawful interception for legally authorised parties to access protected information.

H04L 63/00 focuses on network architectures (i.e. network entities involved, roles played by these entities) and network communication protocols (i.e. how these network entities communicate) regardless of the specifics of the cryptographic mechanism used.

G06F 21/00 Security arrangements for protecting computers or computer systems against unauthorised activity, where the cryptographic mechanisms are not relevant.

References

Limiting references

This place does not cover:

Network architectures or network communication protocols for network security	H04L 63/00
Pseudo-random number generators (if not intended for cryptographic purposes)	G06F 7/584
Finite field arithmetic over elliptic curve (if not intended for cryptographic purposes)	G06F 7/725
Security arrangements for protecting computers, components thereof, programs or data against unauthorised activity	G06F 21/00
Coding or ciphering apparatuses for cryptographic or other purposes involving the need for secrecy	G09C
Network architectures or network communication protocols for wireless network security	H04W 12/00

Informative references

Attention is drawn to the following places, which may be of interest for search:

Protection against unauthorized use of memory	G06F 12/14
Character or pattern recognition	G06K 9/00
Payments on Internet	G06Q 20/00
Electronic commerce or auctions	G06Q 30/00
Smarts-cards and PIN encryption	G07F 7/10
Copy protection	G11B 20/00086
Aspects related to secret communication for (analogue) speech signals	H04K 1/00
Secrecy systems for scanning, transmission or reproduction of documents	H04N 1/44
Subscription TV encryption	H04N 7/167
Content distribution	H04N 21/00

Special rules of classification

The classification of additional information is not seen as mandatory; it will be up to the classifier to decide whether the additional information should be classified or not (is pertinent or not). If considered pertinent, it should be classified.

Indexing Codes are to be used as orthogonal cross.

Invention may be assign more than one code if necessary.

Examples: US2007061572 is to be classified under H04L 9/0863, H04L 9/3273 and H04L 9/3226 since the subject-matter relates to different aspects.

Synonyms and Keywords

In patent documents, the following abbreviations are often used:

MAC	Message authentication code

DPA	Differential power analysis
SPA	Simple power analysis
PRNG	Pseudo random number generator
PKI	Public key infrastructure
KDC	Key distribution server
TTP	Trusted third party
CA	Certificate authority
IBE	Identity based encryption
DH	Diffie-Hellman
QKD	Quantum key distribution
TPM	Trusted platform module
PUF	Physically unclonable function
CRL	Certificate revocation list

In patent documents, the following words/expressions are often used as synonyms:

- "encryption" and "ciphering"

H04L 9/002

{Countermeasures against attacks on cryptographic mechanisms (network architectures or network communication protocols for protection against malicious traffic H04L 63/1441)}

Definition statement

This place covers:

Subject-matter directed to protection and enhancement of cryptographic mechanisms against cryptographic attacks as replay, brute force or birthday attacks.

References

Limiting references

This place does not cover:

Network architectures or network communication protocols for protection against malicious traffic	H04L 63/1441

H04L 9/006

{involving public key infrastructure [PKI] trust models (network architecture or network communication protocol for supporting authentication of entities using certificates in a packet data network H04L 63/0823)}

Definition statement

This place covers:

Subject-matter directed to authentication infrastructures based on public-key cryptography.

References

Limiting references

This place does not cover:

Network architecture or network communication protocol for supporting authentication of entities using certificates in a packet data network	H04L 63/0823

H04L 9/008

{involving homomorphic encryption}

Definition statement

This place covers:

Subject-matter directed to homomorphic cryptographic mechanisms.

H04L 9/06

the encryption apparatus using shift registers or memories for block-wise {or stream} coding, e.g. DES systems {or RC4; Hash functions; Pseudorandom sequence generators}

Definition statement

This place covers:

Subject-matter directed to symmetric-key encryption as DES, (i.e. same keys are used for encryption and decryption), hash functions as MD5, stream ciphers as RC4 or pseudorandom sequence generation.

H04L 9/0618

{Block ciphers, i.e. encrypting groups of characters of a plain text message using fixed encryption transformation}

Definition statement

This place covers:

Encrypting groups of characters of a plain text message using a fixed encryption transformation.

H04L 9/0625

{with splitting of the data block into left and right halves, e.g. Feistel based algorithms, DES, FEAL, IDEA or KASUMI}

Definition statement

This place covers:

Subject-matter directed to cryptographic mechanisms as Feistel based algorithms, DES, FEAL, IDEA or KASUMI algorithms.

H04L 9/0631

{Substitution permutation network [SPN], i.e. cipher composed of a number of stages or rounds each involving linear and nonlinear transformations, e.g. AES algorithms}

Definition statement

This place covers:

Ciphers composed of a number of stages/rounds each involving linear or nonlinear transformations, as AES algorithm.

H04L 9/0637

{Modes of operation, e.g. cipher block chaining [CBC], electronic codebook [ECB] or Galois/counter mode [GCM]}

Definition statement

This place covers:

Subject-matter directed to modes of operation for block ciphers, as CBC (cipher block chaining), CFB (cipher feedback) or OFB (output feedback).

H04L 9/0643

{Hash functions, e.g. MD5, SHA, HMAC or f9 MAC}

Definition statement

This place covers:

The design, structure or function of cryptographic hash functions, as message authentication codes (MAC) or modification detection codes (MDC).

H04L 9/065

{Encryption by serially and continuously modifying data stream elements, e.g. stream cipher systems, RC4, SEAL or A5/3}

Definition statement

This place covers:

Subject-matter directed to synchronous or asynchronous stream ciphers (i.e. encrypting individual characters of a plaintext message one at a time, using an encryption transformation which varies with time), and to key-stream generation.

H04L 9/0656

{Pseudorandom key sequence combined element-for-element with data sequence, e.g. one-time-pad [OTP] or Vernam's cipher}

Definition statement

This place covers:

Subject-matter directed to encryption (combination) of data with (pseudo)random key-stream.

H04L 9/0662

{with particular pseudorandom sequence generator}

Definition statement

This place covers:

Subject-matter directed to the design, structure, functionality or mechanism of pseudorandom sequence generators.

H04L 9/0668

{producing a non-linear pseudorandom sequence}

Definition statement

This place covers:

Subject-matter directed to the design, structure, functionality or mechanism of pseudorandom sequence generators using non-linear functions.

H04L 9/08

Key distribution {or management, e.g. generation, sharing or updating, of cryptographic keys or passwords (network architectures or network communication protocols for supporting key management in a packet data network H04L 63/06)}

Definition statement

This place covers:

Subject-matter directed to management of secret material including generation, distribution, sharing, updating of cryptographic keys or passwords.

References

Limiting references

This place does not cover:

Network architectures or network communication protocols for supporting key management in a packet data network	H04L 63/06

H04L 9/0816

{Key establishment, i.e. cryptographic processes or cryptographic protocols whereby a shared secret becomes available to two or more parties, for subsequent use}

Definition statement

This place covers:

Subject-matter directed to processes or cryptographic protocols whereby a secret (as cryptographic key, password) becomes available to two or more parties, for subsequent cryptographic use.

H04L 9/0819

{Key transport or distribution, i.e. key establishment techniques where one party creates or otherwise obtains a secret value, and securely transfers it to the other(s) (network architectures or network communication protocols for key distribution in a packet data network H04L 63/062)}

Definition statement

This place covers:

Subject-matter directed to key establishment techniques where one party creates or otherwise obtains a secret value, and securely transfers it to other(s).

References

Limiting references

This place does not cover:

Network architectures or network communication protocols for key distribution in a packet data network	H04L 63/062

H04L 9/0822

{using key encryption key}

Definition statement

This place covers:

Subject-matter directed to managing (e.g. transport, distribute) cryptographic keys for securing information by using key encryption keys. Before transmission/distribution the cryptographic keys are encrypted with the key encryption keys. Passwords may be also used as cryptographic keys for encryption.

H04L 9/0825

{using asymmetric-key encryption or public key infrastructure [PKI], e.g. key signature or public key certificates}

Definition statement

This place covers:

Subject-matter directed to managing (e.g. transport, distribute) cryptographic keys for securing information by using public key encryption. The cryptographic key is either encrypted with a private key (i.e. signature) and decrypted with the corresponding public key, or it is encrypted with a public key and decrypted with the corresponding private key. A public key infrastructure (PKI) may be also used wherein the public keys are certified.

H04L 9/0827

{involving distinctive intermediate devices or communication paths (network architectures or network communication protocols using different networks H04L 63/18)}

Definition statement

This place covers:

Subject-matter directed to exchanging/distributing cryptographic keys between communication partners by using distinctive intermediate devices or communication paths/channels. The paths/channels may be out-of-band channels or virtual paths.

References

Limiting references

This place does not cover:

Network architectures or network communication protocols using different networks	H04L 63/18

H04L 9/083

{involving central third party, e.g. key distribution center [KDC] or trusted third party [TTP]}

Definition statement

This place covers:

Subject-matter directed to centralized key units as key distribution center (KDC), trusted third party (TTP) or key translation center (KTC) that are used for cryptographic key management.

Examples: "Handbook of Applied Cryptography" by A.J. Menezes, P.C. van Oorschot, S. A. Vanstone, 5th Edition, June 2001, Pages 546-549.

H04L 9/0833

{involving conference or group key (network architectures or network communication protocols for key management in group communication in a packet data network H04L 63/065)}

Definition statement

This place covers:

Subject-matter directed to secure mechanisms for distributing cryptographic group keys to different communication entities. To ensure the security of a multi-party communication, the multi-party communication messages are transmitted in encrypted form. The group key used for encrypting and decrypting the multi-party communication messages are only known to the group members, so as to ensure that the encrypted messages may be interpreted only by the group members.

References

Limiting references

This place does not cover:

Network architectures or network communication protocols for key management in group communication in a packet data network	H04L 63/065

H04L 9/0836

{using tree structure or hierarchical structure}

Definition statement

This place covers:

Subject-matter directed to mechanisms for distributing cryptographic conference or group keys to different communication entities involving tree or hierarchical structures wherein the central key unit is the root and the group members are the leafs.

H04L 9/0838

{Key agreement, i.e. key establishment technique in which a shared key is derived by parties as a function of information contributed by, or associated with, each of these (network architectures or network communication protocols for key exchange in a packet data network H04L 63/061)}

Definition statement

This place covers:

Subject-matter directed to key establishment techniques in which a shared key is derived by parties as a function of information contributed by, or associated with, each of these, ideally such that no party can predetermine the resulting value.

References

Limiting references

This place does not cover:

Network architectures or network communication protocols for key exchange in a packet data network	H04L 63/061

H04L 9/0841

{involving Diffie-Hellman or related key agreement protocols}

Definition statement

This place covers:

Subject-matter directed to key agreement protocols that allow users or entities to exchange public key values and from these values and knowledge of their own corresponding private keys, securely compute a shared key, allowing for further secure communication.

Examples: "Handbook of Applied Cryptography" by A.J. Menezes, P.C. van Oorschot, S. A. Vanstone, 5th Edition, June 2001, Pages 515-516.

H04L 9/0844

{with user authentication or key authentication, e.g. ElGamal, MTI, MQV-Menezes-Qu-Vanstone protocol or Diffie-Hellman protocols using implicitly-certified keys}

Definition statement

This place covers:

Subject-matter directed to key agreement protocols providing user authentication or key authentication, to schemes as ElGamal, MTI, MQV or related protocols, to key agreement protocols using implicitly-certified keys, or to password-authenticated key agreement mechanisms as PAKE (password-authenticated key exchange), EKE (encrypted key exchange) or SPEKE (simple password exponential key exchange).

Examples: "Handbook of Applied Cryptography" by A.J. Menezes, P.C. van Oorschot, S. A. Vanstone, 5th Edition, June 2001, Pages 517-523.

H04L 9/0847

{involving identity based encryption [IBE] schemes}

Definition statement

This place covers:

Subject-matter directed to key agreement protocols involving IBE schemes (the public key of a user is the binary sequence corresponding to information identifying him in a non-ambiguous way).

Examples: "Handbook of Applied Cryptography" by A.J. Menezes, P.C. van Oorschot, S. A. Vanstone, 5th Edition, June 2001, Pages 561-562.

H04L 9/085

{Secret sharing or secret splitting, e.g. threshold schemes}

Definition statement

This place covers:

Subject-matter directed to distribution of a secret amongst a group of participants, each of which is allocated a share of the secret; the secret can be reconstructed only when a sufficient number of shares are combined together; individual shares are of no use on their own (threshold schemes).

H04L 9/0852

{Quantum cryptography (transmission systems employing electromagnetic waves other than radio waves, e.g. light, infra-red H04B 10/00; wavelength-division multiplex systems H04J 14/02)}

Definition statement

This place covers:

Subject-matter directed to quantum key distribution (QKD), i.e. the process of using quantum communication to establish a shared key between two parties without a third party learning anything about that key, even if said third party can eavesdrop on all communication between said two parties.

References

Limiting references

This place does not cover:

Transmission systems employing electromagnetic waves other than radio-waves	H04B 10/00
Wavelength-division multiplex systems	H04J 14/02

H04L 9/0855

{involving additional nodes, e.g. quantum relays, repeaters, intermediate nodes or remote nodes}

Definition statement

This place covers:

Subject-matter directed to QKD involving additional nodes as quantum relays, repeaters, intermediate or remote nodes.

H04L 9/0858

{Details about key distillation or coding, e.g. reconciliation, error correction, privacy amplification, polarisation coding or phase coding}

Definition statement

This place covers:

Subject-matter directed to reconciliation, error correction, privacy amplification, polarisation or phase coding for QKD systems.

H04L 9/0861

{Generation of secret information including derivation or calculation of cryptographic keys or passwords}

Definition statement

This place covers:

Subject-matter directed to generation, derivation, calculation or extraction of cryptographic keys or passwords.

H04L 9/0863

{involving passwords or one-time passwords (network architectures or network communication protocols for using one-time keys in a packet data network H04L 63/067)}

Definition statement

This place covers:

Subject-matter directed to derivation or generation of encryption keys from passwords.

References

Limiting references

This place does not cover:

Network architectures or network communication protocols for using one-time keys in a packet data network	H04L 63/067

H04L 9/0866

{involving user or device identifiers, e.g. serial number, physical or biometrical information, DNA, hand-signature or measurable physical characteristics}

Definition statement

This place covers:

Subject-matter directed to cryptographic key derivation or extraction involving user or device identifiers as serial number of a device, measurable physical characteristics provided by a device like a PUF (physical unclonable function), or biometrical information of a user.

H04L 9/0869

{involving random numbers or seeds}

Definition statement

This place covers:

Subject-matter directed to cryptographic mechanisms for cryptographic keys generation involving random numbers or seeds.

H04L 9/0872

{using geo-location information, e.g. location data, time, relative position or proximity to other entities}

Definition statement

This place covers:

Subject-matter directed to cryptographic key derivation/generation using data regarding geographical position, time, relative or proximity position to other entities.

H04L 9/0875

{based on channel impulse response [CIR]}

Definition statement

This place covers:

Subject-matter directed to mechanisms for cryptographic key generation / derivation using channel characteristics.

H04L 9/0877

{using additional device, e.g. trusted platform module [TPM], smartcard, USB or hardware security module [HSM]}

Definition statement

This place covers:

Subject-matter directed to cryptographic keys generation using secure crypto-processors as trusted platform modules, smartcards or hardware security modules.

H04L 9/088

{Usage controlling of secret information, e.g. techniques for restricting cryptographic keys to pre-authorized uses, different access levels, validity of crypto-period, different key- or password length, or different strong and weak cryptographic algorithms (network architectures or network communication protocols for using time-dependent keys in a packet data network H04L 63/068)}

Definition statement

This place covers:

Subject-matter relating to cryptographic techniques (as control vectors, key notarization) for restricting cryptographic keys to pre-authorized uses, to crypto-periods of keys (long-term, short-term, ephemeral keys), or to controlling encryption strength (export regulation for cryptographic algorithms).

References

Limiting references

This place does not cover:

Network architectures or network communication protocols for using time-dependent keys in a packet data network	H04L 63/068

H04L 9/0891

{Revocation or update of secret information, e.g. encryption key update or rekeying}

Definition statement

This place covers:

Subject-matter relating to cryptographic keys revocation (compromised keys have to be revoked) or updating (old key is replaced by new key).

H04L 9/0894

{Escrow, recovery or storing of secret information, e.g. secret key escrow or cryptographic key storage}

Definition statement

This place covers:

Subject-matter directed to cryptographic mechanisms for secret key escrow (user traffic is encrypted such that the session keys used for the encryption are available to properly authorized third parties under special circumstances), for secret key recovery (encrypted data have to be recovered following loss or destruction of keying material due to equipment failure or malicious activities), or for storing/ restoring of secret keys (as backups).

H04L 9/0897

{involving additional devices, e.g. trusted platform module [TPM], smartcard or USB}

Definition statement

This place covers:

Subject-matter directed to involving additional (portable) units (as TPM, smartcards) in the cryptographic mechanisms for escrow, recovery or storing of secret information.

H04L 9/14

using a plurality of keys or algorithms {(network architectures or network communication protocols wherein the sending and receiving network entities apply hybrid encryption, i.e. combination of symmetric and asymmetric encryption H04L 63/045)}

Definition statement

This place covers:

Subject-matter directed to cryptographic mechanisms using a plurality of keys or algorithms (as hybrid encryption, i.e. combination of symmetric and public-key encryption) for providing information security.

References

Limiting references

This place does not cover:

Network architectures or network communication protocols wherein the sending and receiving network entities apply hybrid encryption, i.e. combination of symmetric and asymmetric encryption	H04L 63/045

H04L 9/16

the keys or algorithms being changed during operation

Definition statement

This place covers:

Subject-matter directed to cryptographic mechanisms using a plurality of keys or algorithms changing dynamically or during operation.

H04L 9/30

Public key, i.e. encryption algorithm being computationally infeasible to invert or user's encryption keys not requiring secrecy

Definition statement

This place covers:

Subject-matter directed to asymmetric-key or public key cryptography.

H04L 9/3006

{underlying computational problems or public-key parameters}

Definition statement

This place covers:

Subject-matter directed to the interaction between the intractability of several computational problems (as the quadratic residuosity problem) and the security of public-key cryptosystems, or to details relating to public-key parameters (as generators and elements of high order).

H04L 9/3013

{involving the discrete logarithm problem, e.g. ElGamal or Diffie-Hellman systems}

Definition statement

This place covers:

Subject-matter directed to public-key schemes based on the discrete logarithm problem.

H04L 9/302

{involving the integer factorization problem, e.g. RSA or quadratic sieve [QS] schemes}

Definition statement

This place covers:

Subject-matter directed to public-key schemes based on the integer factorization problem.

H04L 9/3026

{details relating to polynomials generation, e.g. generation of irreducible polynomials}

Definition statement

This place covers:

Subject-matter directed to polynomials generation in public-key schemes.

H04L 9/3033

{details relating to pseudo-prime or prime number generation, e.g. primality test}

Definition statement

This place covers:

Subject-matter directed to pseudo-prime or prime number generation in public-key schemes.

H04L 9/304

{based on error correction codes, e.g. McEliece}

Definition statement

This place covers:

Subject-matter directed to public-key schemes involving error correction codes.

H04L 9/3066

{involving algebraic varieties, e.g. elliptic or hyper-elliptic curves}

Definition statement

This place covers:

Subject-matter directed to details of the algebraic or abelian varieties used in the public-key cryptographic schemes, as algebraic groups, rings, fields or elliptic curves.

H04L 9/3073

{involving pairings, e.g. identity based encryption [IBE], bilinear mappings or bilinear pairings, e.g. Weil or Tate pairing}

Definition statement

This place covers:

Subject-matter directed to public-key schemes involving pairings or mappings, as identity based encryption (IBE) schemes.

H04L 9/3093

{involving Lattices or polynomial equations, e.g. NTRU scheme}

Definition statement

This place covers:

Subject-matter directed to public-key schemes involving Lattices (e.g. vector spaces) or polynomial equations.

H04L 9/32

including means for verifying the identity or authority of a user of the system {or for message authentication, e.g. authorization, entity authentication, data integrity or data verification, non-repudiation, key authentication or verification of credentials} ({network architectures or network communication protocols for supporting entities authentication in a packet data network H04L 63/08; applying verification of the received information H04L 63/12; } computer systems G06F; coin-freed or like apparatus with coded identity card or credit card G07F 7/08)

Definition statement

This place covers:

Subject-matter directed to cryptographic mechanisms for authentication or identification, including mechanisms (involving cryptographic primitives or data structures as signatures, certificates, credentials) for authorization, entity authentication, message authentication, data integrity, key authentication, non-repudiation, verification or proof of knowledge.

References

Limiting references

This place does not cover:

Network architectures or network communication protocols for supporting entities authentication in a packet data network	H04L 63/08
Network architectures or network communication protocols applying verification of the received information	H04L 63/12
Electrical digital data processing	G06F
by coded identity card or credit card	G07F 7/08

H04L 9/321

{involving a third party or a trusted authority}

Definition statement

This place covers:

Subject-matter directed to cryptographic mechanisms for authentication between two devices involving a third device.

H04L 9/3213

{using tickets or tokens, e.g. Kerberos (network architectures or network communication protocols for entities authentication using tickets in a packet data network H04L 63/0807)}

Definition statement

This place covers:

Subject-matter directed to cryptographic mechanisms for authentication using tickets or tokens (as Kerberos authentication protocols).

Examples: "Handbook of Applied Cryptography" by A.J. Menezes, P.C. van Oorschot, S. A. Vanstone, 5th Edition, June 2001, Pages 501-502.

References

Limiting references

This place does not cover:

Network architectures or network communication protocols for entities authentication using tickets in a packet data network	H04L 63/0807

H04L 9/3215

{using a plurality of channels (network architectures or network communication protocols using different networks H04L 63/18)}

Definition statement

This place covers:

Subject-matter directed to authentication involving the use of a plurality of channels, as for example the use of a wire channel and a wireless channel.

References

Limiting references

This place does not cover:

Network architectures or network communication protocols using different networks	H04L 63/18

H04L 9/3218

{using proof of knowledge, e.g. Fiat-Shamir, GQ, Schnorr, ornon-interactive zero-knowledge proofs}

Definition statement

This place covers:

Subject-matter directed to identification mechanisms using knowledge proofs, as (NIZKP) non-interactive zero-knowledge proofs (Fiat-Shamir, Schnorr protocols).

H04L 9/3221

{interactive zero-knowledge proofs}

Definition statement

This place covers:

Subject-matter directed to identification mechanisms using interactive zero-knowledge proofs.

H04L 9/3226

{using a predetermined code, e.g. password, passphrase or PIN (network architectures or network communication protocols for supporting authentication of entities using passwords in a packet data network H04L 63/083)}

Definition statement

This place covers:

Subject-matter directed to cryptographic mechanisms for authentication or authorization using predetermined codes as passwords, passphrases, personal identification numbers (PIN).

References

Limiting references

This place does not cover:

Network architectures or network communication protocols for supporting authentication of entities using passwords in a packet data network	H04L 63/083

H04L 9/3228

{One-time or temporary data, i.e. information which is sent for every authentication or authorization, e.g. one-time-password, one-time-token or one-time-key}

Definition statement

This place covers:

Subject-matter directed to authentication or authorization using predetermined codes, said predetermined codes comprising information which is sent for every authentication or authorization, as one-time-password, one-time-token or one-time-key.

H04L 9/3231

{Biological data, e.g. fingerprint, voice or retina (network architectures or network communication protocols for supporting authentication of entities using biometrical features in a packet data network H04L 63/0861)}

Definition statement

This place covers:

Subject-matter directed to cryptographic mechanisms for identification or verification of an individual using biometrical data as fingerprint, voice or retina.

References

Limiting references

This place does not cover:

Network architectures or network communication protocols for supporting authentication of entities using biometrical features in a packet data network	H04L 63/0861

H04L 9/3234

{involving additional secure or trusted devices, e.g. TPM, smartcard, USB or software token (network architectures or network communication protocols for supporting authentication of entities using an additional device in a packet data network H04L 63/0853)}

Definition statement

This place covers:

Subject-matter directed to cryptographic mechanisms for authentication or authorization involving hardware tokens like trusted platform module (TPM), smartcard, USB or software tokens.

References

Limiting references

This place does not cover:

Network architectures or network communication protocols for supporting authentication of entities using an additional device in a packet data network	H04L 63/0853

H04L 9/3236

{using cryptographic hash functions}

Definition statement

This place covers:

Subject-matter directed to authentication mechanisms using cryptographic hash functions.

H04L 9/3239

{involving non-keyed hash functions, e.g. modification detection codes [MDCs], MD5, SHA or RIPEMD}

Definition statement

This place covers:

Subject-matter directed to authentication mechanisms involving modification detection codes (MDC's) as MD5, SHA or RIPEMD, also called non-keyed hash functions.

H04L 9/3242

{involving keyed hash functions, e.g. message authentication codes [MACs], CBC-MAC or HMAC}

Definition statement

This place covers:

Subject-matter directed to authentication mechanisms involving message authentication codes (MAC's) as CBC-MAC or HMAC, also called keyed hash functions.

H04L 9/3247

{involving digital signatures}

Definition statement

This place covers:

Subject-matter directed to authentication mechanisms involving digital signatures.

H04L 9/3249

{using RSA or related signature schemes, e.g. Rabin scheme}

Definition statement

This place covers:

Subject-matter directed to authentication mechanisms involving RSA or related signature schemes, as the Rabin signature scheme.

Examples: "Handbook of Applied Cryptography" by A.J. Menezes, P.C. van Oorschot, S. A. Vanstone, 5th Edition, June 2001, Pages 433-447.

H04L 9/3252

{using DSA or related signature schemes, e.g. elliptic based signatures, ElGamal or Schnorr schemes}

Definition statement

This place covers:

Subject-matter directed to authentication mechanisms involving DSA or related signature schemes, as elliptic curve digital signature algorithm ECDSA or ElGamal signature scheme.

Examples: "Handbook of Applied Cryptography" by A.J. Menezes, P.C. van Oorschot, S. A. Vanstone, 5th Edition, June 2001, Pages 452-462.

H04L 9/3255

{using group based signatures, e.g. ring or threshold signatures}

Definition statement

This place covers:

Subject-matter directed to authentication mechanisms using digital signatures where signers can establish groups such that each member of the group can produce signatures anonymously on behalf of the group.

H04L 9/3257

{using blind signatures}

Definition statement

This place covers:

Subject-matter directed to authentication mechanisms using signatures schemes in which the content of a message is disguised before it is signed.

Examples: "Handbook of Applied Cryptography" by A.J. Menezes, P.C. van Oorschot, S. A. Vanstone, 5th Edition, June 2001, Page 475.

H04L 9/3263

{involving certificates, e.g. public key certificate [PKC] or attribute certificate [AC]; Public key infrastructure [PKI] arrangements (network architectures or network communication protocols for supporting authentication of entities using certificates in a packet data network H04L 63/0823)}

Definition statement

This place covers:

Subject-matter directed to cryptographic mechanisms involving digital certificates as public key certificates or attribute certificates, or to public key infrastructure (PKI) based authentication/ verification using certificates.

Examples: "Handbook of Applied Cryptography" by A.J. Menezes, P.C. van Oorschot, S. A. Vanstone, 5th Edition, June 2001, Pages 559-561.

References

Limiting references

This place does not cover:

Network architectures or network communication protocols for supporting authentication of entities using certificates in a packet data network	H04L 63/0823

H04L 9/3265

{using certificate chains, trees or paths; Hierarchical trust model}

Definition statement

This place covers:

Subject-matter directed to authentication mechanisms involving multiple certification authorities (CA) in public-key systems. Trust relationships between the CA's determine how certificates issued by one CA may be utilized or verified by entities certified by distinct CA's. Hierarchical trust models for certification and cross-certificates are also covered by this subgroup.

Examples: "Handbook of Applied Cryptography" by A.J. Menezes, P.C. van Oorschot, S. A. Vanstone, 5th Edition, June 2001, Pages 572-575.

H04L 9/3268

{using certificate validation, registration, distribution or revocation, e.g. certificate revocation list [CRL]}

Definition statement

This place covers:

Subject-matter directed to cryptographic mechanisms involving certificate generation, validation, registration, distribution (pull, push model) or revocation (certificate revocation list CRL).

Examples: "Handbook of Applied Cryptography" by A.J. Menezes, P.C. van Oorschot, S. A. Vanstone, 5th Edition, June 2001, Pages 576-577.

H04L 9/3271

{using challenge-response}

Definition statement

This place covers:

Subject-matter directed to cryptographic mechanisms comprising protocols where a verifier sends a claimant a challenge (usually a random value or a nonce) that the claimant combines with a shared secret (often by hashing the challenge and secret together) to generate a response that is sent to the verifier. The verifier knows the shared secret and can independently compute the response and compare it with the response generated by the claimant.

Examples: "Handbook of Applied Cryptography" by A.J. Menezes, P.C. van Oorschot, S. A. Vanstone, 5th Edition, June 2001, Pages 397-405.

H04L 9/3273

{for mutual authentication (network architectures or network communication protocols for achieving mutual authentication in a packet data network H04L 63/0869)}

Definition statement

This place covers:

Subject-matter directed to authentication between parties that may corroborate their identities to the other.

References

Limiting references

This place does not cover:

Network architectures or network communication protocols for achieving mutual authentication in a packet data network	H04L 63/0869

H04L 9/3278

{using physically unclonable functions [PUF]}

Definition statement

This place covers:

Subject-matter directed to authentication using PUF.

H04L 9/3297

{involving time stamps, e.g. generation of time stamps}

Definition statement

This place covers:

Subject-matter directed to cryptographic mechanisms for authentication involving time stamps or generation of timestamps.

Examples: "Handbook of Applied Cryptography" by A.J. Menezes, P.C. van Oorschot, S. A. Vanstone, 5th Edition, June 2001, Pages 581-583.

H04L 9/34

Bits, or blocks of bits, of the telegraphic message being interchanged in time {(for speech signals H04K 1/06)}

Definition statement

This place covers:

Subject-matter directed to cryptographic mechanisms involving interchanging in time bits or block of bits of the message.

References

Limiting references

This place does not cover:

by transmitting the information of elements thereof at unnatural speeds or in jumbled order or backwards	H04K 1/06

H04L 9/36

with means for detecting characters not meant for transmission

Definition statement

This place covers:

Subject-matter directed to cryptographic mechanisms involving means for detecting characters not meant for transmission.

H04L 9/38

Encryption being effected by mechanical apparatus, e.g. rotating cams, switches, keytape punchers

Definition statement

This place covers:

Subject-matter directed to cryptographic mechanisms involving encryption effected by mechanical apparatus, as rotating cams, switches or key-tape punchers.

H04L 12/00

Data switching networks (interconnection of, or transfer of information or other signals between, memories, input/output devices or central processing units G06F 13/00)

Definition statement

This place covers:

Transfer of information having been supplied in digital form in data switching networks, e.g.

Systems characterised by network topology;

Systems in which paths are physically permanent during the communication, e.g. connection oriented communication, virtual circuits;

Systems in which the path identification data is included in each information unit, e.g. connectionless communication, datagram;

Hybrid switching systems;

Arrangements for connecting networks having different types of switching systems;

Topology management and discovery;

Local area networks and interworking arrangements there between;

Flow control and congestion control. Traffic scheduling and balancing;

Routing, pathfinding;

Access control and network resource allocation;

Asynchronous transfer mode networks.

References

Limiting references

This place does not cover:

Interconnection of, or transfer of information or other signals between, memories, input/output devices or central processing units	G06F 13/00
Interprocessor communication using networks	G06F 15/173

Informative references

Attention is drawn to the following places, which may be of interest for search:

Communication control	H04L 29/02
Data transfer characterised by protocol	H04L 29/06
Computer-aided management of electronic mail	G06Q 10/10
Multiplexing systems in general	H04J
Automatic or semi-automatic exchanges	H04M 3/00
Telephony conferences arrangements	H04M 3/56
Manual exchanges	H04M 5/00
Conferences, e.g. video conferences	H04N 7/15
Selecting equipment	H04Q

Glossary of terms

In this place, the following terms or expressions are used with the meaning indicated:

Circuit switching	A system in which a communication path is physically permanent during the communication
Packet switching	A system in which information is divided into discrete data units, characterised by a data payload and an address part known as a header part. The data units are able to travel over different communication paths to the destination
Message switching systems	A system in which a message is sent into a network with the address of its destination added and it is routed to its destination through the network, e.g. electronic mail network systems
Hybrid switching	Combinations of different switching systems (e.g. packet switching systems and circuit switching systems)
Gateway	Arrangements for connecting between networks having different types of switching systems

Synonyms and Keywords

In patent documents, the following words/expressions are often used as synonyms:

- "packet", "cell" and "frame"

H04L 12/10

Current supply arrangements

Definition statement

This place covers:

- Usage of an independent power supply network
- Extracting power from the data signal in the line
- Power-over-Ethernet technologies (PoE, PoE+, PoE plus, IEEE 802.2af, IEEE 802.3at)

This groups contains documents dealing with different ways to supply power to terminals connected to a network.

References

Limiting references

This place does not cover:

Internal power supply in a computer	G06F 1/26
Transmission of data over power lines	H04B 3/54
Current supply to telephones	H04M 19/08

Informative references

Attention is drawn to the following places, which may be of interest for search:

Details regarding the feeding of energy to the node from the bus	H04L 12/40045

Glossary of terms

In this place, the following terms or expressions are used with the meaning indicated:

PoE	Power-over-Ethernet
PSE	Power Sourcing Equipment
PD	Powered Device

H04L 12/12

Arrangements for remote connection or disconnection of substations or of equipment thereof

Definition statement

This place covers:

- Transition between different power-saving modes
- Conditions of entry into a sleep mode
- Wake-on LANs
- Energy Efficient Ethernet (IEEE 802.3az)

It covers activation or deactivation of terminals or nodes connected to a network. Sometimes, a power on/off is involved, while other documents deal more with logical (de-)activations.

References

Limiting references

This place does not cover:

Power modes management in wireless networks	H04W 52/02

Informative references

Attention is drawn to the following places, which may be of interest for search:

Details regarding the setting of the power status of a node according to activity on a bus	H04L 12/40039

Glossary of terms

In this place, the following terms or expressions are used with the meaning indicated:

WoL	Wake-on-LAN

H04L 12/14

{Metering,} charging {or billing} arrangements {specially adapted for data wireline or wireless communications (payment schemes, architectures or protocols per se G06Q 20/00)}

Definition statement

This place covers:

Aspects of billing, charging, accounting, tariffing for the transport of data packets in wireless or wireline data networks, including data sub networks of voice networks.

Relationships with other classification places

G06Q: data processing systems or methods, specially adapted for administrative, commercial, financial, managerial, supervisory or forecasting purposes.

H04M: telephonic communication.

H04W: wireless communications networks.

References

Limiting references

This place does not cover:

Payment schemes, architectures or protocols "as such".	G06Q 20/00
Billing for commerce in data processing systems or methods specially adapted for administrative, commercial, financial, managerial, supervisory or forecasting purposes. This includes the non technical aspects which relate to billing and charging in data networks.	G06Q 30/00

Application-oriented references

Examples of places where the subject matter of this place is covered when specially adapted, used for a particular purpose, or incorporated in a larger system:

Arrangements for maintenance or administration with service quality level based billing	H04L 12/2475
Metering arrangements in telephonic communication, such as billing and charging of telephone calls or the billing architecture of telephonic networks.	H04M 15/00
Prepayment voice telephony systems	H04M 17/00
Accounting or billing for services or facilities specially adapted for wireless communication	H04W 4/24

Special rules of classification

Features for which there is no matching subgroup under H04L 12/14 should be classified under H04M 15/00 or H04M 17/00 if appropriate subgroups are provided there.

H04L 12/1403

{Architecture for metering, charging or billing}

Definition statement

This place covers:

This group is used for features related to the interrelation between network nodes, addition of new network nodes, software downloaded to user, self-billing, sampling, backup of billing data, etc. for charging purposes.

H04L 12/1407

{Policy-and-charging control [PCC] architecture}

Definition statement

This place covers:

Charging aspects of the Policy and Charging Rules Function / Policy Charging Rules Node, or Policy and Charging Control architectures.

Special rules of classification

If flow control or admission control aspects are relevant, this is classified in H04L 47/20 , H04L 12/5695 or H04W 28/10.

If network maintenance or administration aspects are relevant, this is classified in H04L 12/244.

H04L 12/1414

{in real-time}

Definition statement

This place covers:

Advice of charge (AoC) during a communication.

H04L 12/1417

{Advice of charge with threshold, e.g. user indicating maximum cost}

Definition statement

This place covers:

Advice of charge (AoC) with a threshold, e.g. user indicating maximum cost.

H04L 12/1421

{Indication of expected costs}

Definition statement

This place covers:

This includes e.g. providing the user a preview of estimated costs before he/she starts a communication, for example before start of a file transfer.

H04L 12/1425

{involving dedicated fields in the data packet for billing purposes}

Definition statement

This place covers:

Special fields, for example in IP-headers of SIP-headers, used for charging or billing.

H04L 12/1428

{Invoice generation, e.g. customization, lay-out, database processing, algorithms for calculating the bill or formatting invoices as WWW pages (invoicing in general G06Q 30/04)}

References

Limiting references

This place does not cover:

Invoicing in general	G06Q 30/04

H04L 12/1432

{Metric aspects}

Definition statement

This place covers:

This group is used for metric aspects whereby the charging is based neither on volume nor on time, for instance based on distance / number of hops, or the use of more complicated formulas for determining the charging.

H04L 12/1435

{volume-based}

Definition statement

This place covers:

This group is used for exceptional volume based charging, for instance only charging for volume of useful data, not overhead data (overhead data being for example: session set-up / tear down, retransmission of erroneous packets).

H04L 12/1439

{time-based}

Definition statement

This place covers:

This group is used for exceptional time based charging, for example only charging for actual transmission time, or time based charging where this would otherwise be uncommon.

H04L 12/1446

{inter-operator billing}

Definition statement

This place covers:

This includes for example: clearing of revenue, format conversion, meta format for billing.

H04L 12/145

{trading network capacity or selecting route based on tariff}

Definition statement

This place covers:

This includes for example the exchanges for trading the capacity, or selecting operators / routes based on tariff.

References

Informative references

Attention is drawn to the following places, which may be of interest for search:

Arrangements for maintenance or administration with service quality level based billing,	H04L 12/2475

H04L 12/1453

{Methods or systems for payment or settlement of the charges for data transmission involving significant interaction with the data transmission network}

Definition statement

This place covers:

Aspects of payment or settlement of charges involving interaction with the data transmission network, see the subgroups below.

H04L 12/146

{using digital cash}

Definition statement

This place covers:

Payment using e-cash, credit units, tokens, points.

H04L 12/1467

{involving prepayment}

Definition statement

This place covers:

Features related to prepayment accounts are classified here.

Special rules of classification

The on-line / real-time metering / charging aspects are additionally classified under "Architecture" by tagging with the subgroup code H04L 12/1403.

More detailed features are classified under H04M 17/00.

H04L 12/1475

{the splitting involving a third party}

Definition statement

This place covers:

Cost splitting involving a third party, such as an advertiser, a sponsor.

This could include a discount to the user based on the acceptance of an advertisement where e.g. the advertiser pays the remaining amount.

Even when the third party bears the full cost, this is still classified here.

H04L 12/1478

{the splitting involving only the communication parties}

Definition statement

This place covers:

Cost splitting involving only the communication parties, e.g. the "A" party and the "B" party in a standard two-party communication, or additional parties in case of teleconferencing.

H04L 12/1482

{involving use of telephony infrastructure for billing for the transport of data, e.g. call detail record [CDR] or intelligent network infrastructure}

Definition statement

This place covers:

This includes e.g. the use of call detail record CDR, or the Intelligent Network infrastructure.

H04L 12/1485

{Tariff-related aspects}

Definition statement

This place covers:

This includes variable tariff dependent on subscription-contract, time-of day, flow, QoS/diffserv, bandwidth usage.

Aspects related to network maintenance or administration with service quality level based billing are also classified under H04L 12/2475.

H04L 12/1489

{dependent on congestion}

Definition statement

This place covers:

This includes variable tariffs dependent on congestion, i.e. congestion pricing.

H04L 12/1492

{negotiation of tariff}

Definition statement

This place covers:

This includes negotiation of the tariff, between the user and the provider, or between providers. Also automatic negotiation by algorithms, i.e. without user involvement, is classified here.

H04L 12/1496

{involving discounts}

Definition statement

This place covers:

Discounts on the overall charge where only one communication party, typically the "A" party, pays the cost.

Special rules of classification

If another communication party is involved, this is classified under H04L 12/1475 .

H04L 12/18

for broadcast or conference {, e.g. multicast (multicast or broadcast switches H04L 49/201)}

Definition statement

This place covers:

- Computer conferences, e.g. whiteboard applications or multimedia conferences, which take place (at least partially) over a data switching network.
- Multicast transmission, since it is considered as a kind of restricted broadcast.

It is a subgroup of H04L 12/00 and hence contains only documents with broadcast, multicast or conference arrangements in data switching networks, and where there is a disclosure of subject-matter relevant for the broadcast, multicast or conference per se.

Further details of subgroups

- H04L 12/1804:

This subgroup is not active and contains networks adapted for stock quotations. Computer supported buying and selling of stocks without network aspects is classified in G06Q 40/04 .

- H04L 12/1809:

This subgroup is not active and contains networks specifically adapted for auctions. Computer supported auctioneering such as Internet auctions without network aspects is classified in G06Q 30/08 .

- H04L 12/1813:

This subgroup includes documents regarding data exchange in real-time between a group of user equipment connected to a data-switching network. The documents provide solutions suitable for groups of more than two pieces of user equipment but do not exclude two users in a degenerate situation.

Instant messaging is classified in H04L 12/581.

- H04L 12/1818:

This subgroup contains documents related to conference administration arrangements for setting up and starting a conference. It covers aspects related to events before the actual conference takes place.

- H04L 12/1822:

This subgroup contains documents related to conference administration arrangements during the conference itself.

Examples of documents classified here: US2007274460, US7408890, US7426540.

- H04L 12/1827:

This subgroup contains documents directed to solving problems such as transmission errors and/or delays, and terminals with limited capabilities.

Examples of documents classified here: EP1876755, WO2004008336

- H04L 12/1831:

This subgroup contains documents directed to the recording of conference content, participant activities and/or behaviour, etc. for later retrieval.

- H04L 12/1836:

This subgroup contains documents where not all the receivers of the broadcast or multicast data are connected through the same kind of networks, which influences the broadcast/multicast service.

- H04L 12/184:

This subgroup contains documents where not all the receivers have the same capabilities, which influences the broadcast/multicast service.

Layered encoding of data as such is classified in H04N 19/00.

- H04L 12/1845:

The size of the location is not relevant; the data transmission can take place within a room, a building, a city, or a nation etc. (protocols for adapting network applications to user terminal location

H04L 29/08657; services specially adapted for wireless communication networks making use of the location of users or terminals H04W 4/02)

- H04L 12/185:

This subgroup contains inter alia documents related to the IGMP or MLD protocols for joining and leaving a multicast group.

It also contains documents dealing with changes to the multicast service as the result of a node failure or a member joining or leaving the group.

Routing tree calculation is classified in H04L 45/48 .

- H04L 12/1854:

This subgroup contains documents dealing with systems where the data forwarding to every receiver is also the responsibility of the receivers themselves, e.g. application layer multicast.

- H04L 12/1859:

This subgroup covers documents where the multicast or broadcast aspect is relevant for the push service, such as pushing common data to a group of users. Arrangements for push based network services in general, such as pushing personal data to (a) user(s), are classified in H04L 29/08693.

Push systems in relation to Internet retrieval, see G06F 17/30864.

- H04L 12/1868:

This subgroup contains documents dealing with the problem of how to make sure that each receiver has received the data and what to do when this is not the case.

- H04L 12/1877:

This subgroup contains documents dealing with any action (e.g. verifications, increased resources, alternative paths, etc.) taken prior to transmission in order to ensure network reliability. Arrangements for detecting or preventing errors in received information in general, see H04L 1/00.

- H04L 12/1881:

This subgroup contains documents concerning the transmission order of multicast and/or broadcast data packets onto the network, e.g. vis-à-vis unicast data.

- H04L 12/1886:

The restrictions are for instance applied to avoid flooding of data by dividing the recipients into multicast groups or using subnets or subdomains.

- H04L 12/189:

This subgroup only contains documents dealing with multicast or broadcast problems that are a result of (at least some) network links being wireless, e.g. intermittent connectivity or bandwidth constraints.

Documents concerned with the wireless part of the network for broadcast or multicast services such as MBMS are classified in H04W 4/06, e.g. radio channel allocation.

- H04L 12/1895:

This subgroup contains documents where real-time information is unidirectionally communicated to a group of recipients.

Relationships with other classification places

H04H: Broadcast communication in broadcast networks, e.g. radio or television networks.

H04N: Pictorial communication, e.g. television.

References

Limiting references

This place does not cover:

One-way streaming of real-time multimedia data	H04L 29/06448
Routing aspects for multicast	H04L 45/16
Flow control for multicast	H04L 47/18
Packet switches for multicast or broadcast	H04L 49/201
Telephone conferences	H04M 3/56
Video conferences	H04N 7/15
Arrangements for the radio link of a wireless network for broadcast or multicast services such as MBMS, e.g. radio channel allocation	H04W 4/06
Push-to-talk systems	H04W 4/10, H04L 29/06442

Informative references

Attention is drawn to the following places, which may be of interest for search:

Signalling and protocols for real-time multimedia conferences	H04L 29/06414

Special rules of classification

The rule for classification in this group is "multiple places, no priority". This means that a document should be classified in all the subgroups that are appropriate for the document.

Glossary of terms

In this place, the following terms or expressions are used with the meaning indicated:

Chat room	A chat room is a special type of computer conference where the users normally are not aware of the (true) identities of other participants' before joining the chat. The chat room application executes mainly on a server which is often accessed through a web browser. No participant has control over the admission of other participants.
Instant messaging, IM	Instant messaging is data exchange in real-time between at least two end users connected to a packet-switching network where the users are aware of the identity and the presence of the other party or parties before starting the data exchange.

H04L 12/22

Arrangements for preventing the taking of data from a data transmission channel without authorisation (means for verifying the identity or the authority of a user of a secure or secret communication system H04L 9/32)

Definition statement

This place covers:

This subgroup is not used.

Relationships with other classification places

This subgroup was initially used to classify network security aspects, which are now classified in:

- H04L 63/00: Network architectures or network communication protocols for network security and/or
- H04W 12/00: Network architectures or network communication protocols for wireless network security

References

Limiting references

This place does not cover:

Cryptographic means for verifying the identity or authority of a user of the system	H04L 9/32

H04L 12/24

Arrangements for maintenance or administration

Definition statement

This place covers:

Aspects relating to operation, administration, maintenance, and provisioning of heterogeneous packet-switched data networks (e.g. IP, Ethernet, ...) both using proprietary and standardised network management architecture and protocols (e.g. TMN, SNMP) irrespective of the physical transport medium and the type of service carried.

Although typical Network Management functions, aspects related to accounting/billing and security are in general not classified here. The only exceptions are Service quality based billing and security of the network management system (e.g. authorised access to the manager, security of management messages).

Relationships with other classification places

Aspects related to the management of the fulfilment of an agreement between two different parties (usually not within the same network/domain), typically known as Service Level Agreement (SLA), are classified under the H04L 12/2464 subgroups.

Aspects related to the monitoring of the performance of a network communications are classified under the H04L 12/2602 subgroups (e.g. monitoring of QoS parameters).

Aspects related to the testing of a network or a network element are classified under H04L 12/2697.

References

Limiting references

This place does not cover:

Detection or prevention of error at physical layer	H04L 1/00
Account or billing for the transport of the data-packets	H04L 12/14
Operation and Maintenance of homogeneous ATM networks	H04L 2012/5625
Arrangement for network security	H04L 29/06551
Controlling or operating of remote end-user devices' applications	H04L 29/08567
Network management of traditional telephonic (circuit-switched) networks	H04M 3/22

Informative references

Attention is drawn to the following places, which may be of interest for search:

Interconnection arrangements between voice switching centres. Network operation, administration, maintenance or provisioning	H04M 7/0081
Arrangements providing connection between exchanges	H04Q 3/0016
Selecting arrangements for multiplex systems using optical techniques	H04Q 11/0001
Wireless communication networks. Supervisory, monitoring or testing arrangements	H04W 24/00
Wireless communication networks. Network traffic or resource management	H04W 28/00

Special rules of classification

In these subgroups, at each hierarchical level, unless otherwise indicated, classification is made in the first appropriate place (first place priority Rule). When several particular technical subjects are disclosed, this rule is separately applied to each of them.

Glossary of terms

In this place, the following terms or expressions are used with the meaning indicated:

Network Management, NM	Refers to the activities, methods, procedures, and tools that pertain to the operation, administration, maintenance, and provisioning of networked systems.
Network Management functions	Functions that are performed as part of network management include Fault, Configuration, Accounting, Performance Security management (FCAPS).
Operation	Deals with keeping the network up and running smoothly.
Administration	Deals with keeping track of resources in the network and how they are assigned. It includes all the "housekeeping" that is necessary to keep the network under control.
Maintenance	Is concerned with performing repairs and upgrades—for example, when equipment must be replaced, when a router needs a patch for an operating system image, when a new switch is added to a network. Maintenance also involves corrective and preventive measures to make the managed network run "better", such as adjusting device configuration parameters.
Provisioning	Is concerned with configuring resources in the network to support a given service. For example, this might include setting up the network so that a new customer can receive the requested service.
Network Manager	An entity that acts in a manager role for performing the network management functions.
Agent	A software module that performs management functions requested by a Manager.
Network element, NE, managed device, managed node	Means manageable logical entity uniting one or more physical devices which are networked. Network elements usually have management agents responsible for performing the network management functions. They can be any type of device, including, but not limited to: hosts, gateways, terminal servers, routers, switches, bridges, hubs, modem, IP telephones, IP video cameras, computer hosts, and printers.

Managed object	An abstract representation of network resources of the network element that is managed.

Synonyms and Keywords

In patent documents, the following abbreviations are often used:

ITU	International Telecommunication Union
IETF	International Engineering Task Force
OMA-DM	Open Mobile Alliance - Device Management
3GPP	3rd Generation Partnership Project
NM	Network Management
NMS	Network Management System
TMN	Telecommunications Management Network
SNMP	Simple Network Management Protocol
MIB	Management Information Base
TR-069	Technical Report 69 (Broadband forum standard)
SOAP	Simple Object Access Protocol

In patent documents, the following words/expressions are often used with the meaning indicated:

"management"	"controlling", "commanding" , "operating".
"configured to"	"adapted to", "suitable for" defining functional features of structural elements.

H04L 12/2401

{involving integration or standardization}

Definition statement

This place covers:

Use of standards NM protocols, standards architecture, arrangement and representation instrumental for an integrated management.

Special rules of classification

This group covers a hierarchy of different miscellaneous aspects focusing on integration and standardisation. Classification is preferably made in the appropriate subdivision below.

H04L 12/2402

{using standardized network management architectures, e.g. TMN [Telecommunication Management network], UNMA [Unified Network Management Architecture]}

Definition statement

This place covers:

Aspects related to the specific type of standards NM architecture used.

Special rules of classification

If the type of standardized architecture is merely cited as general information the group is not to be allocated.

H04L 12/2403

{using standardized network management protocols, e.g. SNMP [Simple Network Management Protocol], CMIP [Common Management Interface Protocol]}

Definition statement

This place covers:

Aspects related to modification or specific use of standards NM protocols. Additional examples are TR-069, OMA-DM.

Special rules of classification

If the type of standardized protocol is merely cited as general information the group is not to be allocated.

H04L 12/2404

{Multivendor or multistandard integration}

Definition statement

This place covers:

- Managing network equipments from different vendors following different communication protocols and standards technologies;
- Integration products capable of communicating with different managed nodes in their own protocol and capable of representing a unified network view to the network managers.

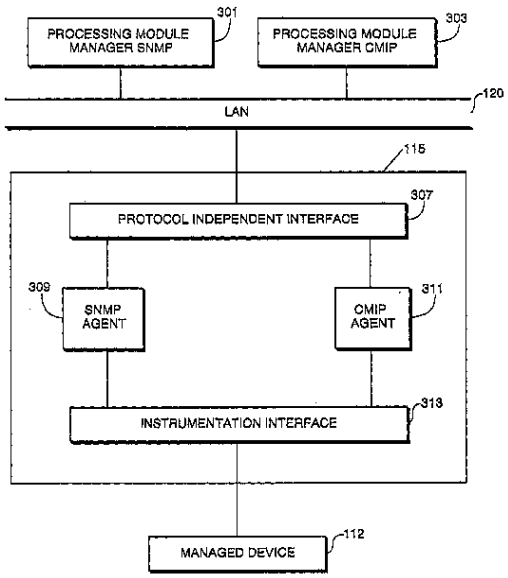

FIG. 3

Examples: EP1162784

H04L 12/2405

{Mapping or translation of multiple network management protocols}

Definition statement

This place covers:

Using different NM protocols, conversion of NM commands and reports from one protocol (e.g. CMIP) into another protocol (e.g. SNMP), mapping between different version of the same NM protocols (SNMP v2 and v3).

FIG. 1C

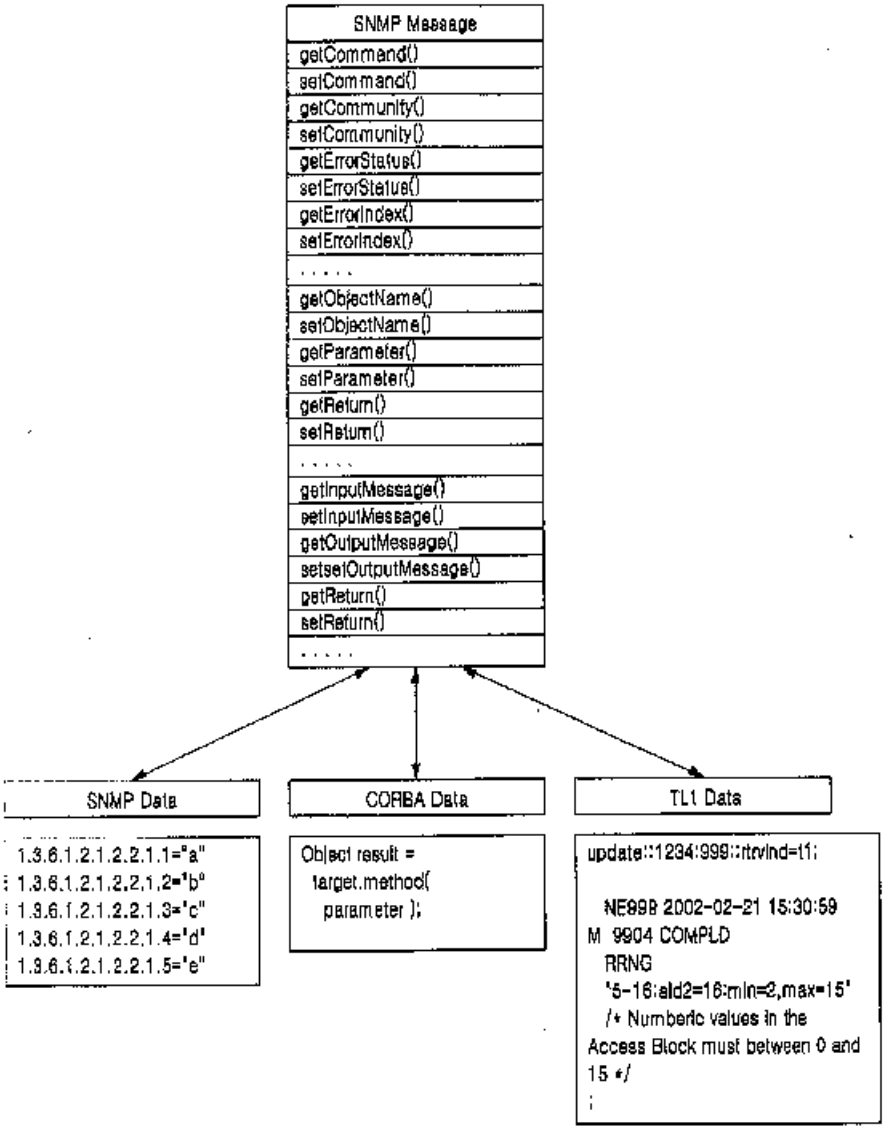

Examples: EP1720286

H04L 12/2406

{using object oriented techniques, e.g. CORBA [Common Object Request Broker Architecture] for representation of network management data}

Definition statement

This place covers:

Using object oriented techniques (e.g. CORBA) for representation of NM data. Processing managed entities as Objects.

Special rules of classification

This class is to be allocated for OO-Techniques other than the typical use of objects in, e.g., SNMP (e.g. MIB's objects or OMA) which can be considered in the class H04L 12/2403.

H04L 12/2407

{using relational databases for representation of network management data, e.g. managing via SQL [Structured Query Language]}

Definition statement

This place covers:

Use of networks being modelled by a (1:1) image in a relational database, e.g., management is done by issuing respective (SQL) commands.

H04L 12/2408

{using Internet technology, e.g. a standard Web Browser at the management workstation}

Definition statement

This place covers:

- NM from a Workstation connected to the Internet, e.g. using a standard Internet Browser;
- Transfer of NM information via internet messages (email, html, xml);
- Web-service NM, OMA, SOAP.

H04L 12/2409

{Architectural aspects of network management arrangements}

Definition statement

This place covers:

- Aspects on how the NMS is structurally organised;
- Aspects on how the NMS is connected for retrieving the management information.

H04L 12/241

{Arrangements involving multiple distributed management centers cooperatively managing the network}

Definition statement

This place covers:

- Multiple NM centres or NM units communicating with each other and managing the network together - often each manager being responsible for his own NM domain and all managers being on the same hierarchical level - peer to peer relation;
- Replacement of failed NM node by a peer one.

Special rules of classification

In group H04L 12/2404, the different multivendor network managers, do not necessarily cooperates with each other but they operate independently.

H04L 12/2411

{Arrangements involving a hierarchical management structure}

Definition statement

This place covers:

Hierarchical structures like main manager > medium (mid - level -) managers > sub-managers.

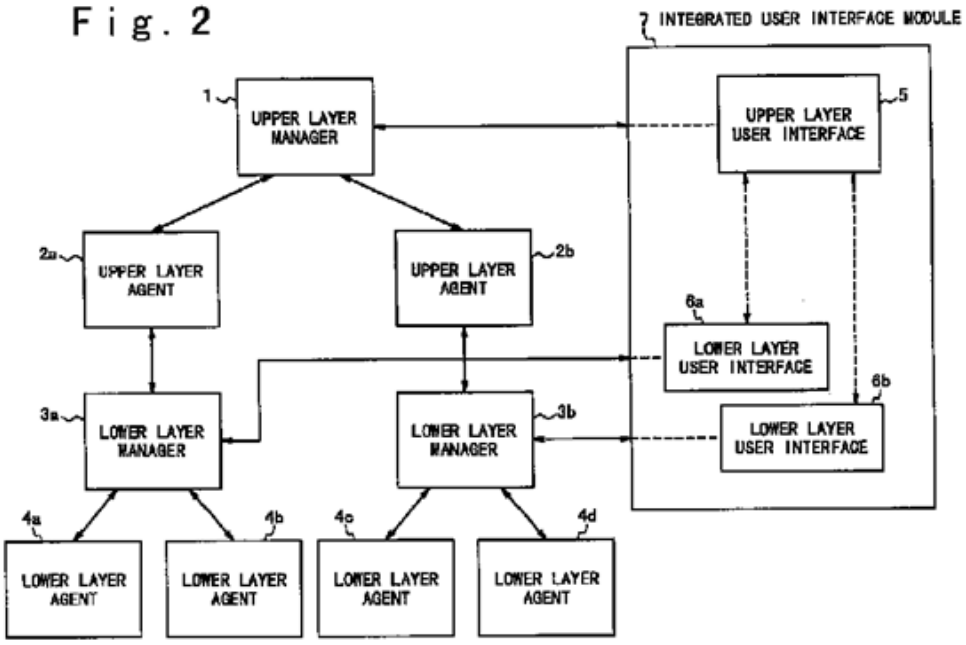

Examples: EP0838919, US2002174207

H04L 12/2412

{Aspects of network management Agents}

Definition statement

This place covers:

Usage of NM (mobile) agents.

Management agents are usually implemented in the managed network nodes themselves or reside "close" to the managed nodes in the network. They usually support the standard NM protocols or provide a mapping functionality between the nodes' proprietary and the managers standardized protocol (e.g. proxy). Mobile management agents can be often programmed in JAVA.

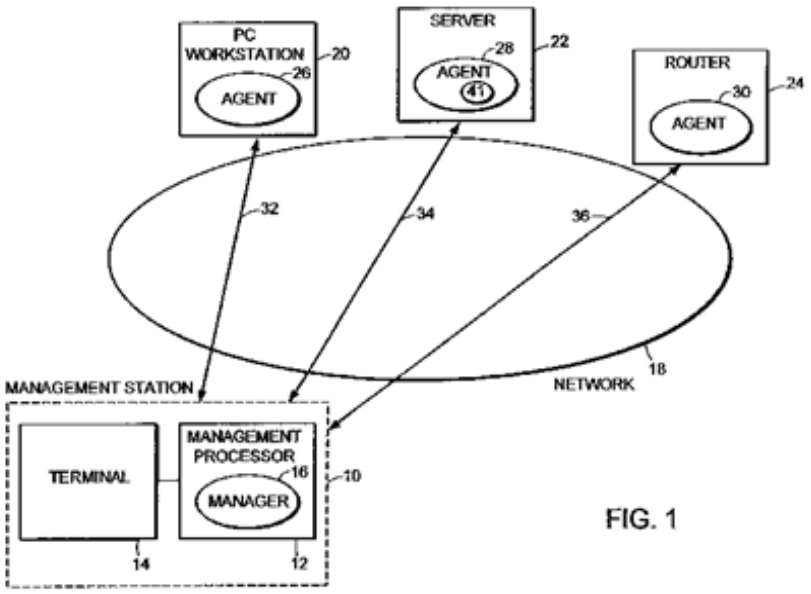

FIG. 1

Examples: EP0831617

Special rules of classification

This class is to be allocated for use and features of Agents other than the typical use already done in, e.g., SNMP standardised protocols, which can be considered in the class H04L 12/2403.

H04L 12/2413

{Arrangements involving CNM [Customer Network Management]}

Definition statement

This place covers:

Giving the customer (limited) access to NM functions.

H04L 12/2414

{involving network analysis}

Definition statement

This place covers:

Aspects related to the (on-line) analysis of the operating network.

Special rules of classification

This group covers miscellaneous aspects focusing on the analysis of the network.

Classification is preferably made in the appropriate subdivision below.

H04L 12/2415

{using statistical methods, e.g. distribution tests, or establishing statistical profiles, or calculating probabilities}

Definition statement

This place covers:

Evaluation of monitored data applying advanced statistical methods and tests going beyond basic counting and averaging of frames, errors. The analysis is based on-line while the network is fully operative.

H04L 12/2416

{for automatically determining the actual topology of a network (Topology discovery in routers H04L 45/02)}

Definition statement

This place covers:

- Determination, retrieval or use of network topology (also based on routing table information) for network management purposes (e.g. fault localisation, network analysis, configuration, graphical representation...).
- Discovery of links, network elements and adjacencies;
- Aspects relating to topology change after migration;
- Planning of the appropriate topology.

References

Limiting references

This place does not cover:

Topology discovery for routing purposes	H04L 45/02
Topology discovery in wireless networks	H04W 40/24

H04L 12/2419

{involving management of faults or events or alarms}

Definition statement

This place covers:

Fault detection, localization, issuing alarms, handling of special events.

References

Limiting references

This place does not cover:

Alarm or messages triggered by the user, customer (trouble ticket)	H04L 12/2489

Informative references

Attention is drawn to the following places, which may be of interest for search:

Fault management in exchanges' connections	H04Q 3/0075

H04L 12/242

{Alarm or event filtering, e.g. for reduction of information}

Definition statement

This place covers:

Reduction of the "alarm stream" to filter out the relevant alarms, events, etc. Often the network manager is overwhelmed with floods of alarms in complex networks. Filters can be set to only show these events the network managers considers "relevant" at a given time.

H04L 12/2421

{Alarm and event correlation}

Definition statement

This place covers:

- Correlating events (alarms) usually for determining the common cause of these alarms as being the "real" problem causing a flood of alarms;
- Determination of the root of a problem in general.

H04L 12/2422

{Automatic restoration of network faults}

Definition statement

This place covers:

- Automatically "repairing" broken links, nodes, routes by a NMS;
- Network disaster recovery.

H04L 12/2423

{involving Artificial Intelligence algorithms, e.g. expert systems, rule based systems, genetic algorithms}

Definition statement

This place covers:

Applying artificial intelligence methods (expert systems, rule based systems, genetic algorithms) in NM usually for finding the cause of problems or for predicting network behaviour and proactive error prevention.

H04L 12/2424

{Configuration management of network or network elements (management of devices network applications for proprietary or special purpose network environments H04L 29/08567; automatic configuration in wireless networks H04W 24/02)}

Definition statement

This place covers:

(Automatic) Configuration of network components, nodes, network elements.

References

Limiting references

This place does not cover:

Management of device's network applications for proprietary or special purpose network environments	H04L 29/08567

Informative references

Attention is drawn to the following places, which may be of interest for search:

Automatic Configuration of system equipment in wireless networks	H04W 24/02

H04L 12/2439

{Bandwidth or capacity management, i.e. automatically increasing or decreasing capacities, e.g. bandwidth on demand}

References

Limiting references

This place does not cover:

Traffic shaping and scheduling, protocols for congestion control, protocols for resource reservation	H04L 12/569

Informative references

Attention is drawn to the following places, which may be of interest for search:

Bandwidth allocation and management in exchanges' connections	H04Q 3/0066

H04L 12/244

{Assignment of logical groupings to network elements; Policy based network management or configuration}

Definition statement

This place covers:

- Assignment of logical grouping to network elements;
- Policies for Group Memberships;
- Management using a pre-defined policy.

H04L 12/2455

{Hardware and software tools for network management}

Definition statement

This place covers:

Simulation tools, software tools, graphical interface aspects, specific hardware devices.

Special rules of classification

This group covers miscellaneous aspects relating to software or hardware tools.

Classification is preferably made in the appropriate subdivision below.

H04L 12/2456

{for network design, e.g. with integrated simulation and design testing}

Definition statement

This place covers:

- Network design tools (e.g. with integrated simulation and design testing) which operates off-line;
- Modelling or abstraction of the network for behaviour simulation.

References

Informative references

Attention is drawn to the following places, which may be of interest for search:

Network design in exchanges connections	H04Q 3/0079

H04L 12/2457

{Network management software packages}

Definition statement

This place covers:

NM software tools like HP Openview, Netview 6000, with GUIs (Graphical User Interfaces) capable of managing large and complex data networks.

H04L 12/2458

{using GUI [Graphical User Interface]}

Definition statement

This place covers:

- Using a GUI to represent the architecture of the network, monitoring results for NM purposes;
- which/how the management information are displayed.

H04L 12/2459

{using dedicated network management hardware}

Definition statement

This place covers:

- (portable) hardware equipment for managing (e.g. configuring, logging management data, etc.) a device at a time;
- Craft terminals used by fields technicians;
- Built-in NM hardware.

H04L 12/246

{using dedicated tools for LAN [Local Area Network] management}

Definition statement

This place covers:

Usually NM tools operating at MAC level.

H04L 12/2461

{Security in network management, e.g. restricting network management access (protocols or architecture for network security H04L 29/06551)}

Definition statement

This place covers:

- Only security related to the NM system;
- Aspects relating to keeping the manager and the management data secure;
- Restricting access control to the NMS, encryption of management data.

References

Limiting references

This place does not cover:

Protocols or architecture for network security	H04L 29/06551

H04L 12/2462

{Decision processes by autonomous network management units using voting and bidding}

Definition statement

This place covers:

- Process for electing a unit as a master;
- Bidding and electing units based on best QoS level.

H04L 12/2463

{Specific management aspects for broadband networks}

Definition statement

This place covers:

NM for traditional broadband digital cross-connect switches supporting user's communication, now being replaced by ATM or DSL-based infrastructure.

H04L 12/2464

{Network service management, ensuring proper service fulfilment according to an agreement or contract between two parties, e.g. between an IT-provider and a customer}

Definition statement

This place covers:

Aspects relating to Service level management between parties for service deployment, assurance and review over heterogeneous packet-switched data networks (e.g. IP, Ethernet, etc.) irrespective of the physical transport medium and the type of service carried.

Glossary of terms

In this place, the following terms or expressions are used with the meaning indicated:

Service Level Management	Provides for continual identification, monitoring and review of the levels of IT services specified in the Service Level Agreements (SLAs). Service Level Management ensures that arrangements are in place with internal IT Support-Providers and external suppliers in the form of Operational Level Agreements (OLAs) and Underpinning Contracts (UCs), respectively.

Service Level Management functions	Ensuring that the agreed IT services are delivered when and where they are supposed to be; Liaising with Availability Management, Capacity Management, Incident Management and Problem Management To ensure that the required levels and quality of service are achieved within the resources agreed producing and maintaining a Service Catalogue (a list of standard IT service options and agreements made available to customers) Ensuring that appropriate IT Service Continuity plans exist to support the business and its continuity requirements.
Service Level Agreement, SLA	Service level agreement is a part of a service contract where the level of service is formally defined.
Quality of Service, QoS	Quality measure relating to specific network parameters of traffic packets (bit rate, delays, packet loss...) which describe the treatment experienced by the packets while passing through the network .
SLA vs QoS	In order to meet the SLA requirements specific internal QoS management processes are to be implemented. SLA is namely directed to an 'aggregation' of (end-to-end) QoS parameters rather than to specific internal network metrics or is directed to QoS related to a customer (QoE).
Quality of Experience, QoE	A subjective measure of a customer's experiences with a service.

Synonyms and Keywords

In patent documents, the following words/expressions are often used with the meaning indicated:

"QoS"	"Service Level performance".

H04L 12/2465

{Managing SLA [Service Level Agreement] or interaction between SLA and QoS [Quality of Service]}

Definition statement

This place covers:

- General aspects relating to the description of the terms or properties of the SLA;
- Aspects relating to mapping/converting SLA requirements into QoS parameters.

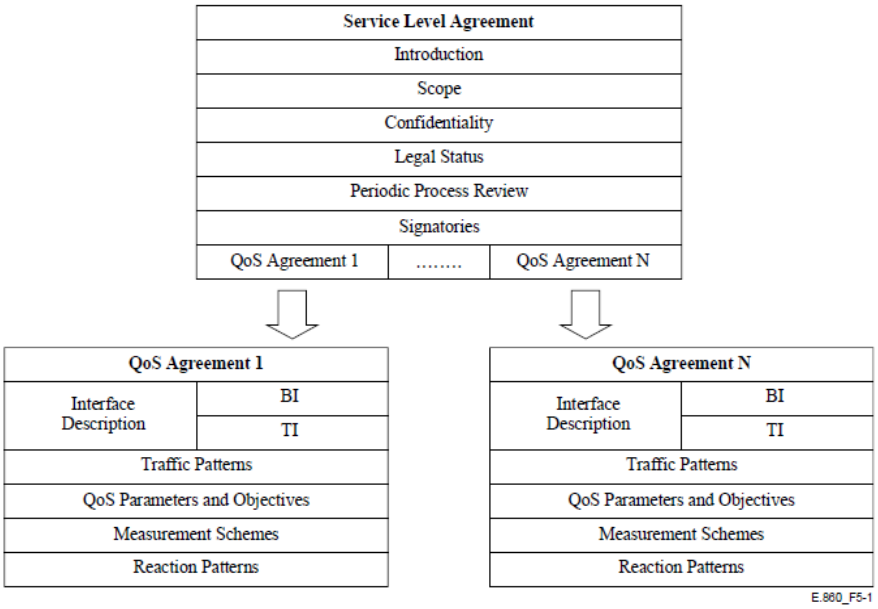

Figure 5-1/E.860 – Generic structure of a Service Level Agreement

ITU-T Rec. E.860 (Figure)

H04L 12/2466

{Defining or negotiating SLA contracts, guarantees or penalties (SLA negotiation in wireless networks H04W 28/24)}

References

Informative references

Attention is drawn to the following places, which may be of interest for search:

SLA negotiation in wireless networks	H04W 28/24

H04L 12/2467

{Measuring SLA quality parameters, e.g. against possible contract or guarantee violations (Monitoring performance metrics on a simple network level H04L 12/2634)}

References

Informative references

Attention is drawn to the following places, which may be of interest for search:

Monitoring performance metrics on a simple network level	H04L 12/2634

H04L 12/2471

{determining service performance, i.e. performance on service level, e.g. response time or MTBF [Mean Time Between Failure]}

Definition statement

This place covers:

- Aspects relating to the benchmarking for specific services;
- Aspects relating to mean time to failure (MTTF), mean time to recover (MTTR);
- Aspects relating to the overall performance of a network, e.g. delay, reliability.

H04L 12/2472

{Ensuring SLA (flow or congestion control at network level H04L 12/569)}

References

Informative references

Attention is drawn to the following places, which may be of interest for search:

Flow or congestion control at network level	H04L 12/569

H04L 12/2474

{by proactively reacting to service quality change (e.g. degradation or upgrade) by reconfiguration (mere restoration of network faults H04L 12/2422)}

References

Limiting references

This place does not cover:

Restoration of network faults	H04L 12/2422

H04L 12/2475

{Service quality level based billing, e.g. dependent on measured service level customer is charged more or less (general charging or billing for transport of data packets H04L 12/14)}

References

Limiting references

This place does not cover:

General charging or billing for transport of data packets	H04L 12/14

H04L 12/2476

{Generating service level reports}

Definition statement

This place covers:

Generating a report based on data showing the performance levels for individual customers or individual services.

H04L 12/2477

{Measuring contribution of individual network components to actual service level (alarm or event correlation H04L 12/2421)}

Definition statement

This place covers:

Identifying network entities, such as nodes, links, applications, that affect or are responsible for actual quality of service, such as service failure or service quality degradation.

References

Informative references

Attention is drawn to the following places, which may be of interest for search:

Alarm or event correlation	H04L 12/2421

H04L 12/2478

{Testing of service level quality}

Definition statement

This place covers:

- Simulating service usage by active agents to automatically measure service level compliance.
- Testing based on artificial traffic, artificial customer's behaviour.

H04L 12/2483

{Automatic provisioning of the service triggered by the service manager, e.g. concrete service implementation by automatic configuration of network components (for initializing configuration, i.e. provisioning of network or devices H04L 12/2425)}

References

Informative references

Attention is drawn to the following places, which may be of interest for search:

Initializing Configuration, i.e. provisioning of network or devices	H04L 12/2425

H04L 12/2484

{Service discovery by the Service Manager (automatically determining the actual topology of a network H04L 12/2416; topology discovery in routers H04L 45/02; arrangements for service discovery, e.g. Service Location Protocol [SLP] H04L 29/08648)}

Definition statement

This place covers:

Identifying service elements or services and dependencies among the elements and services of a network

References

Informative references

Attention is drawn to the following places, which may be of interest for search:

Automatically determining the actual topology of a network	H04L 12/2416
Arrangements for service discovery, e.g. Service Location Protocol (SLP)	H04L 29/08648
Topology discovery in routers	H04L 45/02

H04L 12/2485

{Customer care}

Definition statement

This place covers:

Order and problem handling, Informing end-user of service situation.

H04L 12/2486

{Customer Relationship Management (for arrangements involving Customer Network Management, i.e. giving the customer access to network management functions H04L 12/2413)}

Definition statement

This place covers:

- Handling of customer data, contracts, customer history
- Monitoring and recording customer interactions with the provider
- Data mining techniques for customer's data processing

References

Limiting references

This place does not cover:

Arrangements involving Customer Network Management, i.e. giving the customer access to network management functions	H04L 12/14
Arrangements involving CNM	H04L 12/2413

H04L 12/2487

{Customer-centric QoS [Quality of Service Measurement]}

Definition statement

This place covers:

- Aspects relating to the quality or satisfaction as perceived by the customer/user, Quality of Experience (QoE)
- Aspects relating to reports provided by the customer about the service quality

H04L 12/2488

{Filtering out customers affected by service problems}

Definition statement

This place covers:

Identifying customers affected by service problems as network element failures, network congestion or service degradation

H04L 12/2489

{Handling of Trouble Tickets}

Definition statement

This place covers:

Aspects relating to the generation of error messages or notifications originated by a customer or a customer's terminal to be treated by the Service Provider.

References

Limiting references

This place does not cover:

Alarm messages (automatically) triggered by faulty network elements	H04L 12/2419

H04L 12/249

{Managing simple transport services, i.e. providing only network infrastructure}

Definition statement

This place covers:

Aspects wherein access to the network itself is the service.

H04L 12/2491

{based on type of value added network service under agreement}

Special rules of classification

The subgroups should be allocated only in combination with at least one of the groups from H04L 12/2464 - H04L 12/249 and only if essential for the characterisation of the service management aspects.

H04L 12/2492

{wherein the managed service relates to web hosting (web hosting as such H04L 29/0809, web-browsers G06F 17/30861, video-hosting H04N 21/2743)}

References

Limiting references

This place does not cover:

Web hosting	H04L 29/0809
Web-browsers	G06F 17/30861
Video-hosting	H04N 21/2743

H04L 12/2493

{wherein the managed service relates to voice services (protocols for real-time multimedia communications H04L 29/06176; management of telephonic communication services H04M 3/22; management of VoIP services H04M 7/0081)}

References

Limiting references

This place does not cover:

Protocols for real-time multimedia communications	H04L 29/06176
Management of telephonic communication services	H04M 3/22
Management of VoIP services	H04M 7/0081

H04L 12/2494

{wherein the managed service relates to audio / video / TV (protocols for real-time multimedia communications H04L 29/06176; interactive television or VoD H04N 21/00)}

References

Limiting references

This place does not cover:

Protocols for real-time multimedia communications	H04L 29/06176

Interactive television or VoD	H04N 21/00

H04L 12/2495

{wherein the managed service relates to messaging (messaging, such as e-mail in packet-switching networks H04L 12/58)}

References

Limiting references

This place does not cover:

Messaging, such as e-mail in packet-switching networks	H04L 12/58

H04L 12/2496

{wherein the managed service relates to chat services (conducting a computer conference H04L 12/1822; instant messaging H04L 12/581)}

References

Limiting references

This place does not cover:

Conducting a computer conference	H04L 12/1822
Instant messaging	H04L 12/581

H04L 12/26

Monitoring arrangements; Testing arrangements

References

Limiting references

This place does not cover:

Aspects related to monitoring and testing of service level agreed between two different parties (usually not within the same network/domain), typically known as Service Level Agreement (SLA) compliance	H04L 12/2464

Special rules of classification

In these subgroups, at each hierarchical level, unless otherwise indicated, classification is made in the first appropriate place (first place priority Rule). When several particular technical subjects are disclosed, this rule is separately applied to each of them.

H04L 12/2602

{Monitoring arrangements}

Definition statement

This place covers:

- Monitoring aspects, that means basically observing the network by measuring passing traffic or setting counters here and there at different points in the network;
- Aspects of testing in the sense of "active monitoring", by introducing new packets or modifying data packets;
- Monitoring QoS parameters of packets irrespective of the use and application;
- Monitoring of metrics of network element;
- Measuring performance at network/link level (availability, status)
- Report of monitored parameters.

References

Limiting references

This place does not cover:

Monitoring at physical layer	H04L 1/00
Monitoring for security reasons	H04L 29/06884
Monitoring of networked distributed applications	H04L 29/08099

Special rules of classification

Aspects related to testing, with the meaning that something is done upon the network to see its reaction, e.g. by means of test packets or dummy traffic are classified under H04L 12/2697 only if a corresponding entry is not available under H04L 12/2602 or in case network elements are tested off-line while the network is not yet operative.

Synonyms and Keywords

In patent documents, the following words/expressions are often used with the meaning indicated:

"testing"	"monitoring".

H04L 12/2605

{involving a reduction of monitoring data}

Definition statement

This place covers:

Aspects relating to the selection of specific type/group of packets .

H04L 12/2607

{using sampling of monitoring data, i.e. storing only a selection of packets}

Definition statement

This place covers:

Aspects relating to the storing of selection of packets.

H04L 12/261

{using adaptive sampling}

Definition statement

This place covers:

Dynamically adjusting the sampling rate according to specific criteria, e.g. traffic burstiness, packet rate, statistics.

H04L 12/2613

{using flow Flow generation}

Definition statement

This place covers:

- Aggregating captured packet data into flows, a flow being defined as a unidirectional sequence of packets all sharing same network parameters;
- Monitoring flow, wherein the flow is usually characterised by a n-tuple of network parameters, e.g. Source/Destination address, Port number, protocol number (e.g. IETF IPFIX, NetFlow);
- Monitoring of flow on different OSI-layers.

H04L 12/2615

{using filtering (alarm or event filtering H04L 12/242)}

Definition statement

This place covers:

- Reduction of monitored data by applying filters to extract specific type of packets or part of packets;
- Deep packet inspection (e.g. BPF, libpcap);
- Using hashing, masking for extracting and storing packets or part of packets.

References

Limiting references

This place does not cover:

Alarm or event filtering	H04L 12/242

H04L 12/2618

{processing of captured monitoring data}

Definition statement

This place covers:

- Aspects focusing on aggregation and post-processing of the monitored data;
- Storing of (part of) monitored packets.

H04L 12/2621

{for graphical visualization of monitoring data (graphical user interfaces H04L 12/2458)}

Definition statement

This place covers:

Displaying, showing of the monitoring data/result in graphs, x-y axis, drawings.

References

Limiting references

This place does not cover:

Use of a GUI as a tool for monitoring or managing a network	H04L 12/2458

H04L 12/2626

{for traffic related reporting}

Definition statement

This place covers:

Reporting the overall traffic on a Tap-Point in the network

H04L 12/2628

{for device related reporting (reporting of sensed information of home appliances H04L 12/2803)}

Definition statement

This place covers:

Reporting traffic characteristics for a specific device or network node

References

Limiting references

This place does not cover:

Reporting of sensed information of home appliances managing a network	H04L 12/2803

H04L 12/2631

{for time frame related reporting}

Definition statement

This place covers:

Formatting traffic reports with respect to certain time intervals, e.g. per second, minute, hour, day or week, or configurable timeframes

H04L 12/2634

{Monitoring using or based on specific metrics}

Definition statement

This place covers:

- Aspect of monitoring of packets on a network (link/node) level including QoS parameters;
- Aspect of monitoring of network elements' parameters (temperature, power consumption, etc.) via network protocols.

References

Informative references

Attention is drawn to the following places, which may be of interest for search:

Measuring performance on a service level	H04L 12/2467

H04L 12/2639

{based on connectivity}

Definition statement

This place covers:

- Monitoring whether a link is active or a device is connected
- Checking or verifying both physical and logical connectivity, e.g., by using connectivity check messages
- Use of techniques at layer 2 or 3 of the OSI-stack.

H04L 12/2642

{based on functioning (monitoring the activity of the application user H04L 29/08675; monitoring appliance functionality of home appliances H04L 12/2803)}

Definition statement

This place covers:

Monitoring the status of the connected device, e.g. whether the device is or working properly, monitoring network element resource metrics like CPU or memory utilization or printer utilization.

References

Limiting references

This place does not cover:

Monitoring appliance functionality of home appliances	H04L 12/2803
Monitoring the activity of the application user	H04L 29/08675

H04L 12/2644

{using errors (management of events, faults or alarms H04L 12/2419)}

References

Limiting references

This place does not cover:

Management of events, faults or alarms	H04L 12/2419

H04L 12/2647

{using packet loss}

Definition statement

This place covers:

Monitoring of transmission data loss for all upper layers (Layers 2, 3 and above), as e.g. packet/frame/PDU loss, is classified in subgroups H04L 12/2649, H04L 12/2652.

A loss is often recognized via expiration of a timer (timeout) and can be caused by full buffer, overloading, discarding.

H04L 12/2655

{based on transmission error}

Definition statement

This place covers:

Monitoring of transmission errors include all layer independent errors which can be recognized after reception of any transmitted data as bit errors (as e.g. CRC/checksum errors), packet errors (as e.g. duplicate packet errors, packets received after close errors), framing errors (frames too long/short), alignment errors, framing checksum (FCS) errors, bad header errors, carrier sense errors, packet collisions, late collision errors, excessive collision errors, backward errors, duplicate message acknowledgements (ACKs), out of order packet errors.

H04L 12/2657

{based on delays}

Definition statement

This place covers:

Different type of packet delays (transition time), also due to node or stack processing, buffering.

Special rules of classification

This class and the subgroups refer to delays irrespective of the use that is done of the delay information. For example the use of delay information for synchronizing time/clock is to be classified in H04J 3/0635.

H04L 12/2671

{based on utilization of link capacity}

Definition statement

This place covers:

Level of congestion, i.e. percentage or absolute value of link capacity available or used.

H04L 12/2673

{based on throughput}

Definition statement

This place covers:

Observing the time required to get a certain amount of bits across a link or path, thus the ratio of bits per time unit.

H04L 12/2676

{based on packet rate}

Definition statement

This place covers:

Monitoring bandwidth or packet data rate used by a traffic stream.

H04L 12/2692

{using threshold monitoring}

Definition statement

This place covers:

Monitoring if observed parameters or metrics are within upper or lower thresholds.

H04L 12/2694

{using protocol analyzers}

Definition statement

This place covers:

Use and protocols of protocol/packet analyzer for network monitoring purposes.

H04L 12/2697

{Testing equipment; Routine testing}

Definition statement

This place covers:

- Testing, with the meaning that something is done upon the network to see its reaction, e.g. by means of test packets or dummy traffic.
- Aspects relating to use of test traffic for interoperability measurement;
- Generation of specific type of testing traffic and routine;

- Characterisation of the type of test traffic to be used;
- Aspects relating to testing network or network elements, when the network or network element are not yet operative by simulating with quasi-real traffic.
- Hardware test elements, e.g. test-on-chip

References

Limiting references

This place does not cover:

Testing of service level quality under SLA	H04L 12/2478

Informative references

Attention is drawn to the following places, which may be of interest for search:

Testing in ATM	H04L 2012/5628
Testing in Wired Telephony	H04M 3/30
Testing in Wireless Networks	H04W 24/00

Special rules of classification

This subgroup is used for classification of aspects related to testing in the sense of "active monitoring", e.g. by introducing new packets or modifying data packets, only if a corresponding entry is not available under H04L 12/2602.

H04L 12/28

characterised by path configuration, e.g. local area networks [LAN], wide area networks [WAN]

Definition statement

This place covers:

Header group accommodating those networks whose topology respond to regular LAN topologies (bus, ring or star). His head group contains also WAN and MAN topologies. Documents dealing with very generic network topologies on Layer 2 should be classified here.

H04L 12/2801

{Broadband local area networks}

Definition statement

This place covers:

- DOCSIS-related technologies (cable modems, cable modem termination systems);
- MoCA networks;
- HFC networks.

This group concerns mostly cable modems and developments of data services on existing cable infrastructures. One can find in this group variations on the basic IEEE 802.14 standard for accessing an optical cable using mostly TDMA. Some architectures for access to video on demand networks using HFC (Hybrid Fibre Coax) physical media. Of course some LANs using ATM as transport technology are also to be fund in the group.

References

Limiting references

This place does not cover:

Multimedia protocols	H04L 29/06176
Telephony over cable networks	H04M 7/006
Video on demand and video coding	H04N 7/173, H04N 7/24

Informative references

Attention is drawn to the following places, which may be of interest for search:

Point-to-multipoint connection of the data network to end users in an access network	H04L 12/2861
Arrangements for combining access network resources elements, e.g. channel bonding	H04L 12/2863

Glossary of terms

In this place, the following terms or expressions are used with the meaning indicated:

DOCSIS	Data Over Cable Service Interface Specification
CMTS	Cable Modem Termination System
CM	Cable Modem
MoCA	Multimedia over COAX Alliance

H04L 12/2803

{Home automation networks}

Definition statement

This place covers:

Network of appliances in a same home exchanging within said network messages which are generic with regard to the type of appliance.

This group covers all network aspects of domotics.

It covers:

- Transmission media such as power transmission lines or dedicated wiring for controlling home appliances;
- Using the home telephone wiring for building a LAN. HomePNA(Phone-line Networking Alliance).
- Addressing issues concerning the identification of devices in different
- areas of a dwelling
- Network control. Using e.g. a regular TV receiver or dedicated terminal Tapping devices used to connect appliances to the selected wiring (Echelon's LON network).
- Some standard architectures for home control use: CEBUS or FieldBus, PNA.

References

Limiting references

This place does not cover:

Factory automation	G05B 19/418
Transmission of data over power lines	H04B 3/54
Remote control of lights using a control bus	H05B 37/0254

Informative references

Attention is drawn to the following places, which may be of interest for search:

Monitoring functionality	H04L 12/2642
Access arrangements	H04L 12/2856
High-speed IEEE 1394 serial bus	H04L 12/40052
Single bridge functionality	H04L 12/4625
Protocol conversion	H04L 29/06068
Arrangements for network security	H04L 29/06551
Protocols for network applications involving the use of web-based technology	H04L 29/0809
Protocols for network applications involving the use of web-based technology for remote control or remote monitoring	H04L 29/08099
Arrangements for service discovery	H04L 29/08648
Device-related reporting	H04L 43/065
Retrieval from the Internet	G06F 17/30861
Arrangements for transmitting signals characterised by the use of a wireless electrical link	G08C 17/00
Telephonic communication systems adapted for combination with telemetering systems	H04M 11/002
Telephonic communication systems adapted for combination with remote control systems	H04M 11/007
Receiver circuitry for displaying additional information being controlled by a remote control apparatus	H04N 5/44582
Adaptations of television systems for transmission by electric cable for domestic distribution	H04N 7/106
Arrangements in telecontrol or telemetry systems for selectively calling a substation from a main station, in which substation desired apparatus is selected for applying a control signal thereto or for obtaining measured values therefrom	H04Q 9/00

Special rules of classification

This group covers all network aspects of domotics.

The following topics are well represented in the group:

Use of networks (involving wireless links, power transmission lines, home telephone wiring) for controlling or monitoring home appliances or for exchanging control messages between audio video appliances.

In the definition above, the following criteria are emphasized:

- There should be at least one network of appliances; this condition is not fulfilled for a simple application of remote control of a heating system by telephone or Internet;
- The devices connected to the network are appliances, i.e. devices having a sensor or actor role in the home automation; a network involving printers and computers (these computers having no appliance function) only does not fulfill this condition;
- There should be general aspects of the network, i.e. aspects which are not specific to a single type of application; this is the case for instance when the invention relates to a message data field used for controlling appliances, but not if the invention concerns specifically the use of a few commands to accomplish a certain operation; this difference can be understood as a difference of layer;

The subgroup relates to control or monitoring with several appliances in a same home; this condition is not fulfilled when the appliances are communicating only via the Internet or the mobile cellular network; this condition is also not fulfilled by the interconnection of audio-video devices with their broadcast network; hotels can be considered as home if the privacy concept coincides with the hotel; building automation of purely mechanical and lighting devices can be considered as a home if it is separate from the city infrastructure.

H04L 12/2805

{Home Audio Video Interoperability [HAVI] networks}

Definition statement

This place covers:

HAVi networks encompasses connections to control Audio and Video hardware using FireWire.

Glossary of terms

In this place, the following terms or expressions are used with the meaning indicated:

HAVi	Home Audio Video Interoperability

H04L 12/2807

{Exchanging configuration information on appliance services in a home automation network (adress allocation H04L 29/12207; arrangements for maintenance or administration involving network analysis for automatically determining the actual topology of a network H04L 12/2416; hardware or software tools for network management using graphical user interfaces H04L 12/2458)}

Definition statement

This place covers:

Exchange and retrieval of information regarding which element having which attributes are present in the network.

References

Limiting references

This place does not cover:

Network management of home networks, for instance by initialisation of the network, configuration and self-configuration of the network	H04L 12/24
for automatically determining the actual topology of a network	H04L 12/2416
using GUI (Graphical User Interface)	H04L 12/2458
Address allocation	H04L 29/12207
Configuration of devices by assignment of identifiers and addresses	H04L 61/00

H04L 12/2809

{indicating that an appliance service is present in a home automation network (monitoring functionality H04L 12/2642; arrangements for service discovery H04L 29/08648)}

Definition statement

This place covers:

Exchange of information indicating which services or operations are available on the home network appliances.

References

Limiting references

This place does not cover:

Discovering of devices as part of configuration	H04L 12/2424
based on functioning	H04L 12/2642
Arrangements for service discovery, e.g. Service Location Protocol	H04L 29/08648
Address allocation to terminals or nodes connected to a network	H04L 61/20

H04L 12/281

{indicating a format for calling an appliance service function in a home automation network (protocols for network applications involving the use of web-based technology H04L 29/08099)}

Definition statement

This place covers:

Description of capabilities of devices and services in a home network.

Exchange of information describing access methods and parameters of devices or services available on the home network appliances.

Emphasis is on "description", i.e. the data structure indicating the commands and parameters with which control of the operation of a device's appliance can be triggered.

References

Limiting references

This place does not cover:

for remote control or remote monitoring	H04L 29/08099

H04L 12/2812

{describing content present in a home automation network, e.g. audio video content (retrieval from the Internet G06F 17/30861)}

Definition statement

This place covers:

Description of contents available in a home network. Exchange of information describing contents available on the home network appliances. Emphasis is on "contents".

References

Limiting references

This place does not cover:

Protocols for network applications involving the use of web-based technology, e.g. Hyper Text Transfer Protocol (HTTP)	H04L 29/0809
Information retrieval from the Internet	G06F 17/30861 - G06F 17/30905

H04L 12/2814

{Exchanging control software or macros for controlling appliance services in a home automation network (arrangements for maintenance or administration involving configuration of the network and network elements H04L 12/2424)}

Definition statement

This place covers:

Self explanatory, pieces of software, firmware used to control home appliances.

References

Limiting references

This place does not cover:

Configuration management of network or network elements	H04L 12/2424
Protocols for network applications	H04L 29/08081
Programme loading or initiating	G06F 9/445 - G06F 9/44594

H04L 12/2816

{Controlling appliance services of a home automation network by calling their functionalities (arrangements in telecontrol or telemetry systems for selectively calling a substation from a main station; in which substation desired apparatus is selected for applying a control signal thereto or for obtaining measured values therefrom H04Q 9/00)}

Definition statement

This place covers:

Exchange of information that triggers action of at least one device.

References

Limiting references

This place does not cover:

Arrangements in telecontrol or telemetry systems for selectively calling a substation from a main station, in which substation desired apparatus is selected for applying a control signal thereto or for obtaining measured values therefrom	H04Q 9/00

H04L 12/2818

{from a device located outside both the home and the home network (access arrangements H04L 12/2856; protocols for network applications involving the use of web-based technology for remote control or remote monitoring H04L 29/08099; telephonic communication systems adapted for combination with remote control systems H04M 11/007; arrangements for transmitting signals characterised by the use of a wireless eletrical link G08C 17/00)}

Definition statement

This place covers:

Complex home network provisions for being remotely accessed. Access to a home network (with at least two appliances) from a device outside the home network.

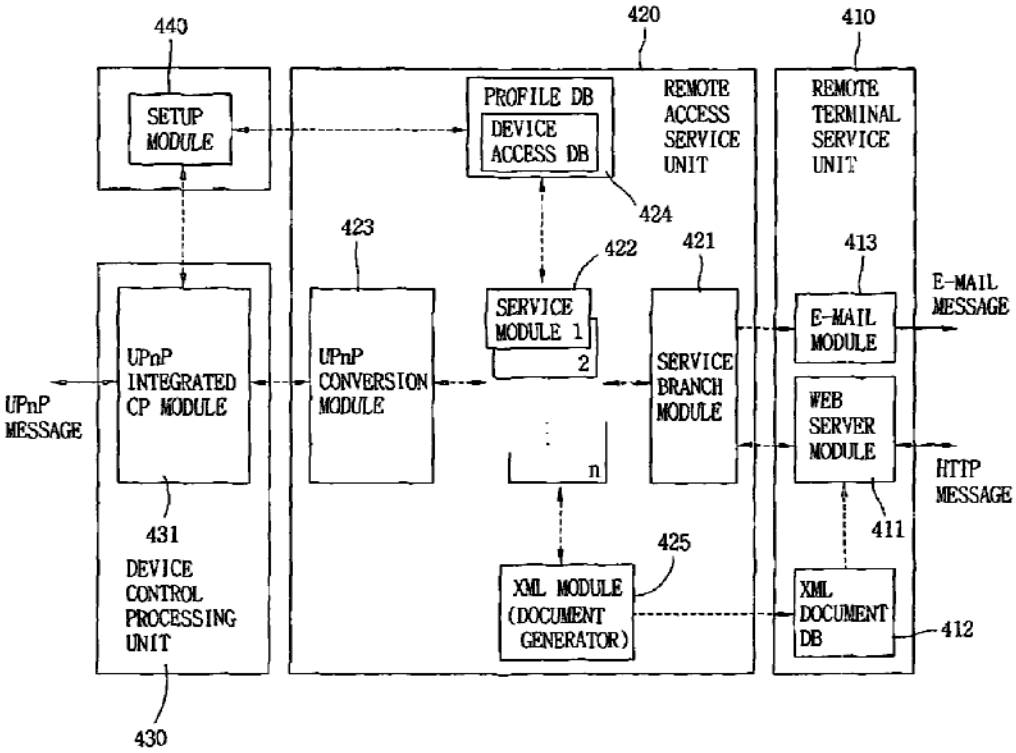

In that example, a device control processor which communicates with a remote access service unit and operating a home network device using universal plug and play (UPnP) message, stores list of controlled devices, each device state, event list and service request list.

The processor converts request/message received from service unit/UPnP device into message/ request for transmission to respective units.

References

Limiting references

This place does not cover:

Remote control by Internet	H04L 29/08099
Arrangements for transmitting signals characterised by the use of a wireless electrical link	G08C 17/00
Remote control by local wireless signals	G08C 17/02

Remote control via a telephone connection	H04M 11/007

H04L 12/282

{based on user interaction within the home (receiver circuitry for displaying additional information being controlled by a remote control apparatus H04N 5/44582)}

Definition statement

This place covers:

User interaction from within network for the control of appliances, e.g. through remote controller, PDA, cell phone, RF ID etc.

References

Limiting references

This place does not cover:

User interface for managing and configuring a home network	H04L 12/24
Receiver circuitry for displaying additional information being controlled by a remote control apparatus	H04N 5/44582

H04L 12/2821

{Avoiding conflicts related to the use of home appliances (arrangements for network security H04L 29/06551)}

Definition statement

This place covers:

The home appliance or another device prevents the home appliance from having to execute commands which disturb ongoing operations.

References

Limiting references

This place does not cover:

Arrangements for network security	H04L 29/06551
Access control according to access rights are classified only in network security	H04L 29/06823

H04L 12/2823

{Reporting information sensed by appliance or service execution status of appliance services in a home automation network (device-related reporting H04L 43/065; arrangements in telecontrol or telemetry systems for selectively calling a substation from a main station, in which substation desired apparatus is selected for applying a control signal thereto or for obtaining measured values therefrom H04Q 9/00)}

Definition statement

This place covers:

Exchange of information for reporting or monitoring the operation of home appliances so as to trigger operation of other home appliance functions. The status of a service or the sensed situation of an appliance is advertised on a home network for reaction by other home devices to create an environment conforming to specific rules or profiles.

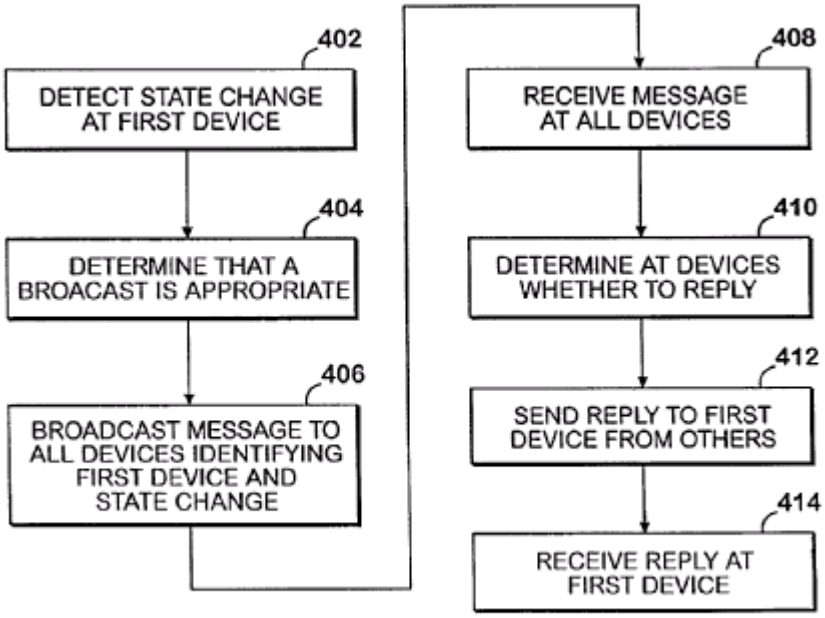

FIG.4

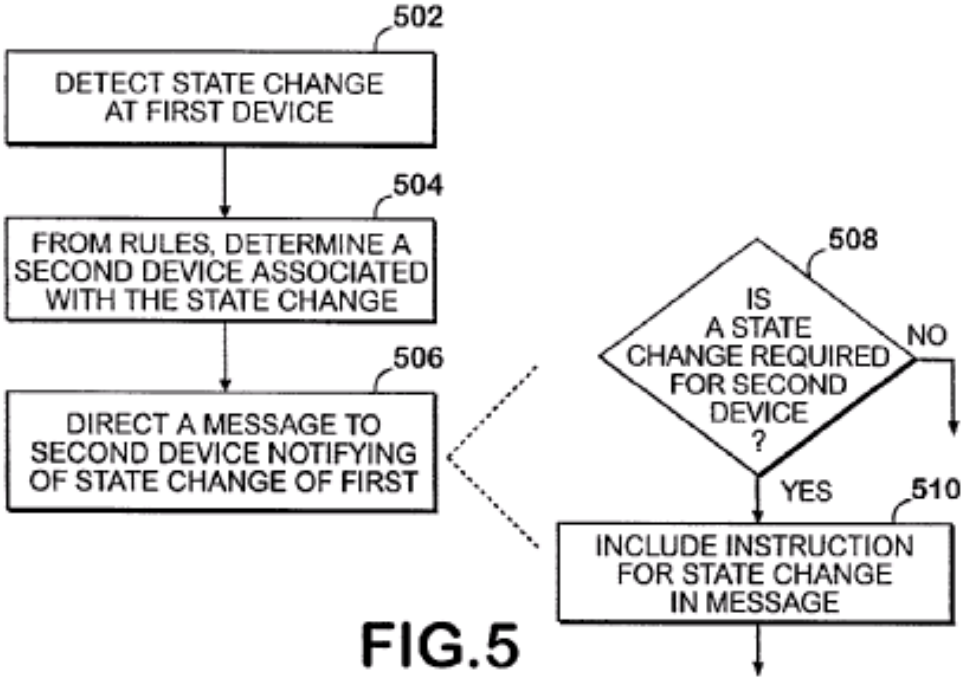

FIG.5

In that document, the rules of device interaction may include instructions that are to be transmitted from the aggregator in response to the aggregator receiving change of state messages from devices of the environment.

References

Limiting references

This place does not cover:

Advertising the status of network devices	H04L 12/24
Alarm systems in general	G08B 25/00
Arrangements in telecontrol or telemetry systems for selectively calling a substation from a main station, in which substation desired apparatus is selected for applying a control signal thereto or for obtaining measured values therefrom	H04Q 9/00

H04L 12/2825

{Reporting to a device located outside the home and the home network (access arrangements H04L 12/2856; protocols for network applications involving the use of web-based technology for remote control or remote monitoring H04L 29/08099; telephonic communication systems adapted for combination with telemetering systems H04M 11/002)}

Definition statement

This place covers:

Self-explanatory : reporting the operation of home appliances or a particular network event affecting a home appliance to one or more external devices, i.e. to devices outside the home network.

References

Limiting references

This place does not cover:

Access arrangements	H04L 12/2856
Protocols for network applications involving the use of web-based technology for remote control or remote monitoring	H04L 29/08099
Telephonic communication systems adapted for combination with telemetering systems	H04M 11/002

H04L 12/2827

{Reporting to a device within the home network; wherein the reception of the information reported automatically triggers the execution of a home appliance functionality}

Definition statement

This place covers:

Self explanatory: in contrast to the preceding class, the exchange of messages only occurs among home appliances within the same home automation network.

H04L 12/2829

{involving user profiles according to which the execution of a home appliance functionality is automatically triggered}

Definition statement

This place covers:

Self explanatory: a user profile defines rules or a policy for triggering specific actions or the emission of a command to a device in response to the occurrence of an event at a given home appliance.

H04L 12/283

{Processing of data at an internetworking point of a home automation network}

Definition statement

This place covers:

Device adapted to communicate with different types of networks.

H04L 12/2832

{Interconnection of the control functionalities between home networks (single bridge functionality H04L 12/4625)}

Definition statement

This place covers:

Bridges between home networks (e.g. HAVi/UPNP).

Home gateway performing interface adaptation (also lower layer adaptation, kind of bridge).

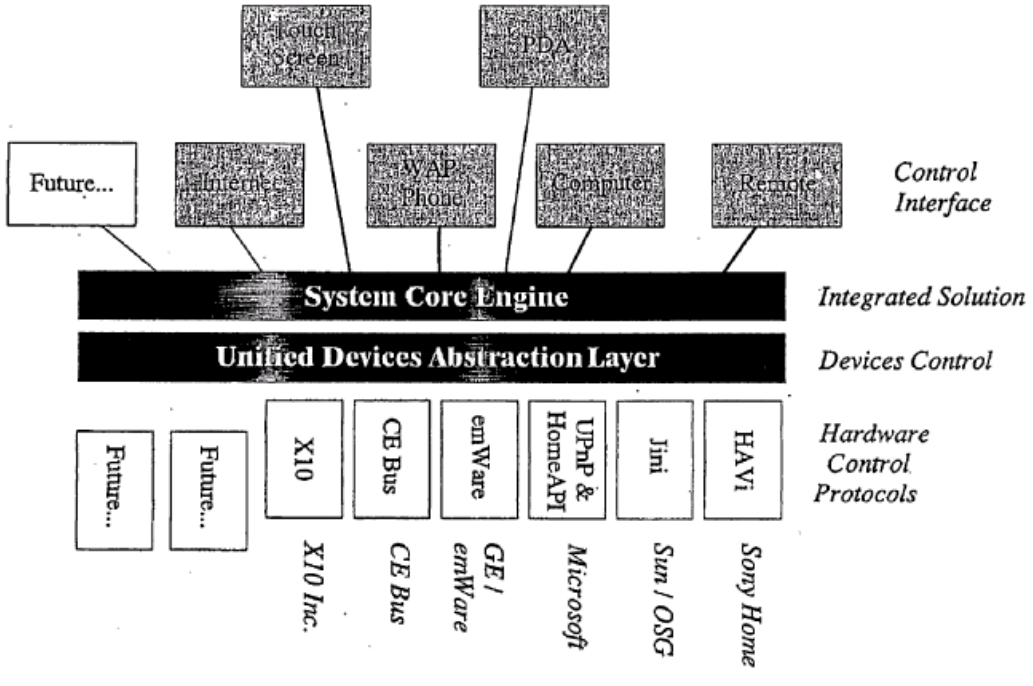

References

Limiting references

This place does not cover:

Bridging devices	H04L 12/462
Single bridge functionality	H04L 12/4625
Protocol conversion	H04L 29/06068
Devices adapted for communicating using different protocols	H04L 29/06163

H04L 12/2834

{Switching of information between an external network and a home network (access arrangements H04L 12/2856)}

Definition statement

This place covers:

Switching (or forwarding, routing) at a gateway between external network(s) and home network(s). Contains operational details on residential/home gateways.

References

Limiting references

This place does not cover:

Multiplexing of signals from an external network for distribution to the home network	H04L 12/2838

Access arrangements	H04L 12/2856
Bridging devices	H04L 12/462, H04L 12/4625

H04L 12/2836

{Protocol conversion between an external network and a home network (protocol conversion H04L 29/06068; adaptation of digital video signals for transport over a specific home network H04N 7/24; controlling appliance services of a home automation network from a device located outside the home and the home network H04L 12/2818)}

Definition statement

This place covers:

Protocol conversion between home network(s) and external network(s). If the conversion is only from one controlling protocol to another, the corresponding Indexing Code entry should be used.

References

Limiting references

This place does not cover:

from a device located outside both the home and the home network	H04L 12/2818
Protocol conversion	H04L 29/06068
Devices adapted for communicating using different protocols	H04L 29/06163

H04L 12/2838

{Distribution of signals within a home automation network, e.g. involving splitting/multiplexing signals to/from different paths (adaptations of television systems for transmission by electric cable for domestic distribution H04N 7/106; hybrid transport H04L 12/6418; home network arrangements specially adapted for distribution of digital video signals H04N 7/24)}

Definition statement

This place covers:

Distribution of signals within a home network. Data signal distribution from/to appliances within the home network. The mere transmission of signals in a home network without a particular way to convey said signal in the home network should not be classified here.

Example: WO2006100515.

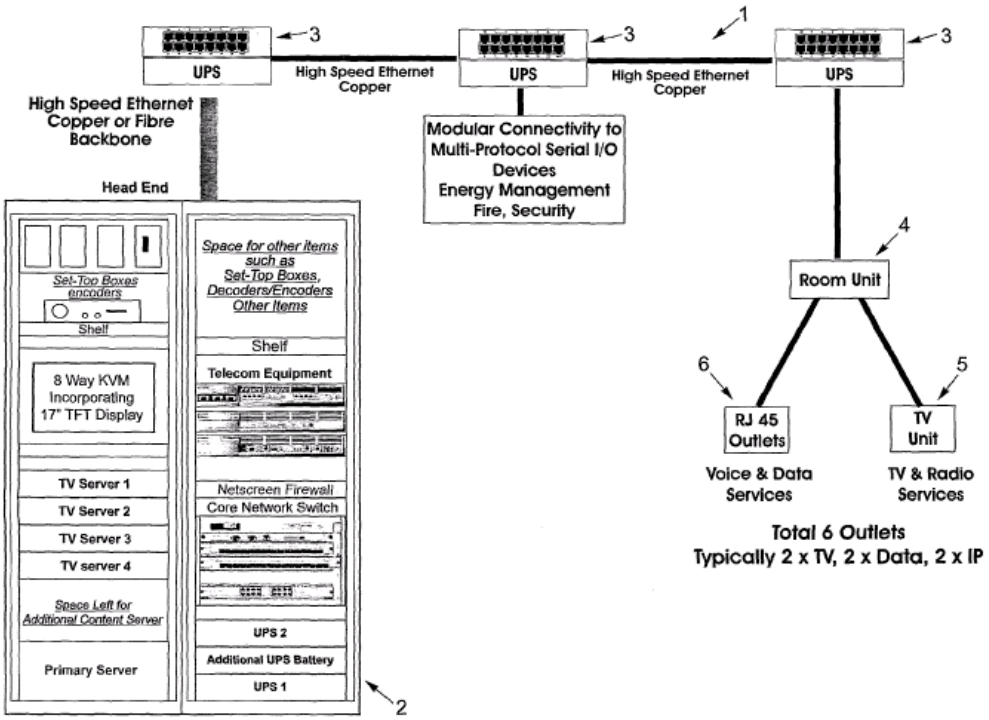

The main aspect of the document is that the signals are all distributed in the home through one Ethernet cable on which all packets are transmitted according to TCP/IP. There are no improvements to the TCP/IP no details on the head end and the switching within the head end. No details about control of devices, that's why signal distribution appears to be the only main aspect within home network.

Second example: US6751441

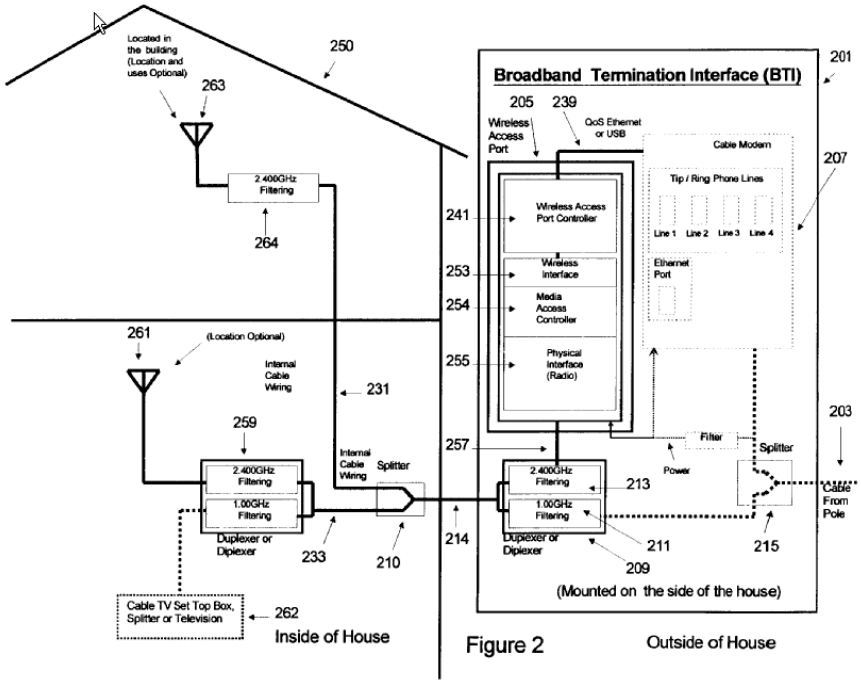

Figure 2

Signals from cable network are split into TV and data signals; the data signals are modulated at the WLAN frequency but distributed to the rooms along the cables. Within the rooms the signals are radiated through an antenna.

References

Limiting references

This place does not cover:

Hybrid transport	H04L 12/6418
Domestic distribution of TV signals	H04N 7/106

H04L 12/2852

{Metropolitan area networks}

Definition statement

This place covers:

A MAN, Metropolitan Area Network, refers to the access technology as well as to the size. The reference book "Computer Networks" written by Tanenbaum gives a definition of it: "A MAN is a network that covers an entire city, but uses LAN technology".

H04L 12/2854

{Wide area networks, e.g. public data networks}

Definition statement

This place covers:

This group is very general about WANs. It contains public data networks such as Frame Relay and X.25 packet networks.

H04L 12/2856

{Access arrangements, e.g. Internet access (asynchronous transfer mode networks H04L 12/5601; broadband local area networks H04L 12/2801; optical access or distribution networks H04Q 11/0067; access to open networks H04L 12/5691; digital subscriber line end-user equipment and bit-level processing of data on a PSTN-based network H04M 11/00; home network gateways H04L 12/2834; wireless access networks H04W)}

Definition statement

This place covers:

An access network is a part of a global wired communication network that connects subscribers to their service providers in the public data network.

It consists generally of end-user equipments connected to an access multiplexer. The access multiplexer is connected to an access server through an aggregation network, wherein the access server is the interface between the access network and the public data network.

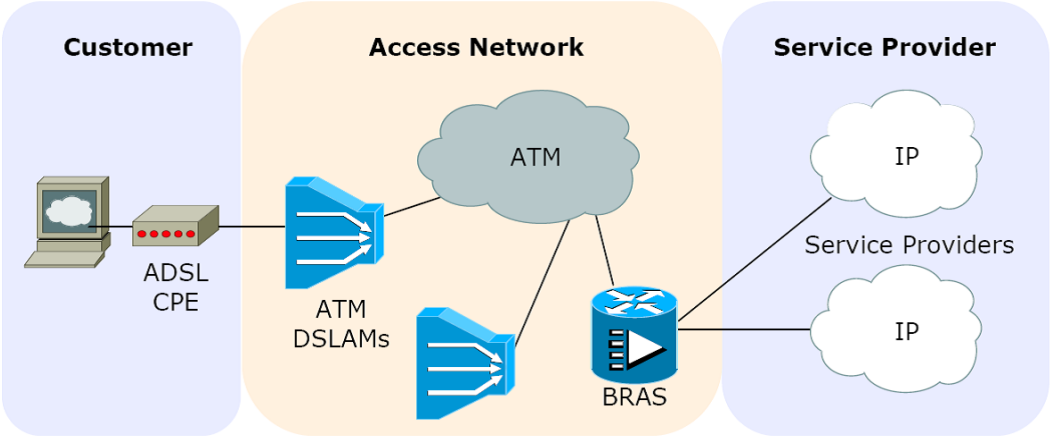

References

Limiting references

This place does not cover:

Switching of information between an external network and a home network	H04L 12/2834
Management of WDM parameters in optical multiplex systems	H04J 14/02
Access arrangements for providing telephone service in networks other than PSTN/ISDN	H04M 7/0066
Circuit-switched access networks	H04M 7/1205
Telephonic communication systems adapted for combination with other electrical systems	H04M 11/00
Transfer of video data (multimedia streaming) from a video content server to a subscriber	H04N 7/173
Wireless communications networks	H04W

Informative references

Attention is drawn to the following places, which may be of interest for search:

Access to a packet-switched data network over a hybrid coaxial infrastructure	H04L 12/2801
Asynchronous Transfer Mode (ATM) networks	H04L 12/5601
Admission & flow control, QoS management	H04L 12/569
Access to open networks	H04L 12/5691
Establishment of secure connections and subscriber authentication	H04L 29/06551
Addressing and naming aspects	H04L 61/00
Digital subscriber line end-user equipment, DSL modems, xDSL splitters, and bit-level processing of data on PSTN-based network	H04M 11/062
Provision of optical access or distribution networks	H04Q 11/0067

Wireless access networks	H04W

H04L 12/2858

{Access network architectures}

Definition statement

This place covers:

There are various ways to deploy an access network, but most of them rely on an existing wired infrastructure. Originally, access to the Internet was mostly provided by DSL access technologies, where a point-to point connection between a subscriber and a service provider is provisioned via a PPP over ATM connection, thereby re-using the existing wired network and their functionalities (ATM PVCs). Nowadays, the trend is clearly to integrate Ethernet as carrier technology for access network segments while remaining the main carrier for the backbone networks, thereby coping with the increasing demand for value-added services such as VoIP, HDTV, IPTV and Triple-Play. In parallel to the development of DSL access technologies, broadcast networks such as cable and optical networks are more and more employed to convey data packets in addition to other signal types, such as video or audio streaming.

References

Limiting references

This place does not cover:

Access to open networks, incl. selection between different service providers	H04L 12/5691

H04L 12/2859

{Point-to-point connection between the data network and the subscribers (encapsulation H04L 12/4633; virtual LANs H04L 12/4641; routing of packets H04L 12/5689)}

Definition statement

This place covers:

This group covers essentially the original access technologies wherein a connection between an end-user and the service provider is established by means of a point-to-point protocol, over various types of aggregation networks, such as ATM or Ethernet (PPPoX sessions). This group also includes pseudo-wire techniques, i.e. encapsulation over an IP-based access network.

References

Informative references

Attention is drawn to the following places, which may be of interest for search:

Packet Encapsulation	H04L 12/4633
Virtual Local Area Networks	H04L 12/4641
ATM networks	H04L 12/5601
Routing of packets	H04L 12/5689

Special rules of classification

This group has a quite broad definition and ideally should not be the only symbol allocated to a document dealing with access networks. Only documents focusing on the access network infrastructure taken as a whole, i.e. from the public data network to the end-user device, implementing a form of point-to-point technology shall be allocated this subclass as unique symbol.

H04L 12/2861

{Point-to-multipoint connection from the data network to the subscribers}

Definition statement

This place covers:

In this entry, new access technologies relying on the existing cable infrastructure (e.g. DOCSIS, MoCA) or optical networks (PONs) are addressed. Data is transmitted over a shared communication medium on the downlink and the uplink. On the downlink, data is broadcast by the service provider to all subscribers, and each subscriber extracts the data which is aimed to him, out of the stream of multiplexed data.

References

Informative references

Attention is drawn to the following places, which may be of interest for search:

Broadband Local Area Networks	H04L 12/2801
Provision for optical access or packet networks	H04Q 11/0067

Special rules of classification

See the reasoning for the symbol H04L 12/2859.

H04L 12/2863

{Arrangements for combining access network resources elements, e.g. channel bonding (multichannel protocols H04L 29/06088; routing of packets H04L 12/5689; modem pooling H04L 25/14)}

Definition statement

This place covers:

Aspects related to an optimized usage of the available access network resources in order to enable provision of greedy multimedia services over bandwidth-limited access networks. This could consist of bundling subscriber lines, arranging a logical combination of network resources, such as frequency bands on a HFC network or the simultaneous usage of multiple PPPoX connections for transporting the same data service.

References

Informative references

Attention is drawn to the following places, which may be of interest for search:

Routing of packets	H04L 12/5689
Modem pooling	H04L 25/14
Multichannel protocols	H04L 29/06088

Virtual concatenation in SDH/OTN networks	H04J 2203/0094

H04L 12/2865

{Logical combinations}

Definition statement

This place covers:

Essentially, comprises arrangements for multiplexing individual subscriber connections or grouping of frequency slots on a cable network. The emphasis is on the combination of logical or abstract entities, i.e. frequency or bandwidth resources combinations, not physical entities such as cables or hardware elements.

H04L 12/2867

{Physical combinations}

Definition statement

This place covers:

Refers to the concept of grouping or combining physical access network resources such as devices, interfaces, wires, cables, in order to enhance the total throughput provided to a given subscriber.

H04L 12/2869

{Operational details of access network equipments (admission control or resource allocation in access networks H04L 12/5692)}

Definition statement

This place covers:

Functional characteristics of various devices commonly present in an access network.

References

Informative references

Attention is drawn to the following places, which may be of interest for search:

Admission control & resource allocation in access networks	H04L 12/5692

H04L 12/287

{Remote access server, e.g. BRAS}

Definition statement

This place covers:

A remote access server is a device that routes traffic to and from an access multiplexer (e.g. DSLAM) on a public data network.

Glossary of terms

In this place, the following terms or expressions are used with the meaning indicated:

BRAS	Broadband Remote Access Server

BAS	Broadband access server

H04L 12/2872

{Termination of subscriber connections}

Definition statement

This place covers:

Covers essentially the handling of PPPoX sessions : how the Point-to-Point sessions are initiated, maintained, or terminated. Only PPPoX-related operations at the remote access server are covered by this subclass.

H04L 12/2874

{Processing of data for distribution to the subscribers}

Definition statement

This place covers:

Details about specific data processing operations for distributing various multimedia flows, originally formatted to optimize their transport through an IP network, over the access network to the subscribers.

The emphasis is on a particular way to re-arrange or adapt a flow received at a remote access server from the public data network before distributing the flow to subscriber(s) over the access network, wherein this particular way reflects the characteristics of the access networks.

Example: a remote access server adds MAC address tag information to a packet received from an ISP.

H04L 12/2876

{Handling of subscriber policies (group policies management H04L 12/244)}

Definition statement

This place covers:

Differentiated policies for distributing data to subscribers, based for instance on user profiles, time of the day, traffic volume etc.

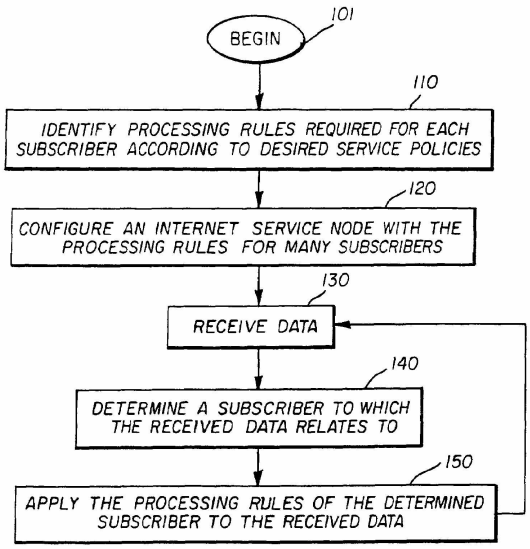

FIG. 1

References

Limiting references

This place does not cover:

Group management policies	H04L 12/244

H04L 12/2878

{Access multiplexer, e.g. DSLAM (generic distributed time multiplexers, e.g. TDM/TDMA H04J 3/1694)}

Definition statement

This place covers:

Operational details of an access multiplexer is a device, located normally in a telephone exchange or in multi-dwelling units of a service provider, that connects multiple end-user terminals to a public data network access node (e.g. a BRAS) through an aggregation network. Examples : DSLAM, fiber distribution hubs or active splitters, etc.

References

Informative references

Attention is drawn to the following places, which may be of interest for search:

Generic distributed time multiplexers, e.g. TDM/TDMA	H04J 3/1694
DSL modem with DSLAM functionalities	H04M 11/062

H04L 12/2879

{characterised by the network type on the uplink side, i.e. towards the service provider network}

Definition statement

This place covers:

Self-explanatory : this group characterizes the access multiplexer by the type of aggregation network used on the uplink (not to the end-user equipment).

H04L 12/2885

{Arrangements interfacing with optical systems (optical network equipment H04B 10/00; optical multiplexers H04J 14/00)}

Definition statement

This place covers:

- Optical Line Terminals
- Cable modem Termination System.

References

Limiting references

This place does not cover:

Determination of optical signal parameters (e.g. wavelength) as a function of data characteristics from Layer-2 or above, like VLAN number, IP address, subscriber profile	H04B 10/00
Optical multiplexers	H04J 14/00

Glossary of terms

In this place, the following terms or expressions are used with the meaning indicated:

OLT	Optical Line Terminals
CMTS	Cable Modem Termination System

H04L 12/2887

{characterised by the offered subscriber services}

Definition statement

This place covers:

Self-explanatory: in contrast to the group H04L 12/2879, this group covers the type of connection linking the access multiplexer to subscriber devices.

Special rules of classification

Normally, a document shall be allocated one of the symbols from this group only when the document focuses on the communication services offered between the access multiplexer and the subscriber devices.

H04L 12/2889

{Multiservice, e.g. MSAN}

Definition statement

This place covers:

A Multi-service access Node, also known as a Multi-service access gateway is a device typically installed in a telephone exchange (although sometimes in a roadside serving area interface cabinet) which connects customers' telephone lines to the core network, to provide telephone, ISDN, and broadband such as DSL all from a single platform.

Glossary of terms

In this place, the following terms or expressions are used with the meaning indicated:

MSAN	Multi-service Access Node
MSAG	Multi-service Access Gateway

H04L 12/289

{Single service}

Definition statement

This place covers:

Self-explanatory. Essentially one DSL type is supported by the access multiplexer.

H04L 12/2892

{characterised by the access multiplexer architecture}

Definition statement

This place covers:

This group covers specific implementation designs of an access multiplexer, e.g. specific hardware resources or line cards arrangements.

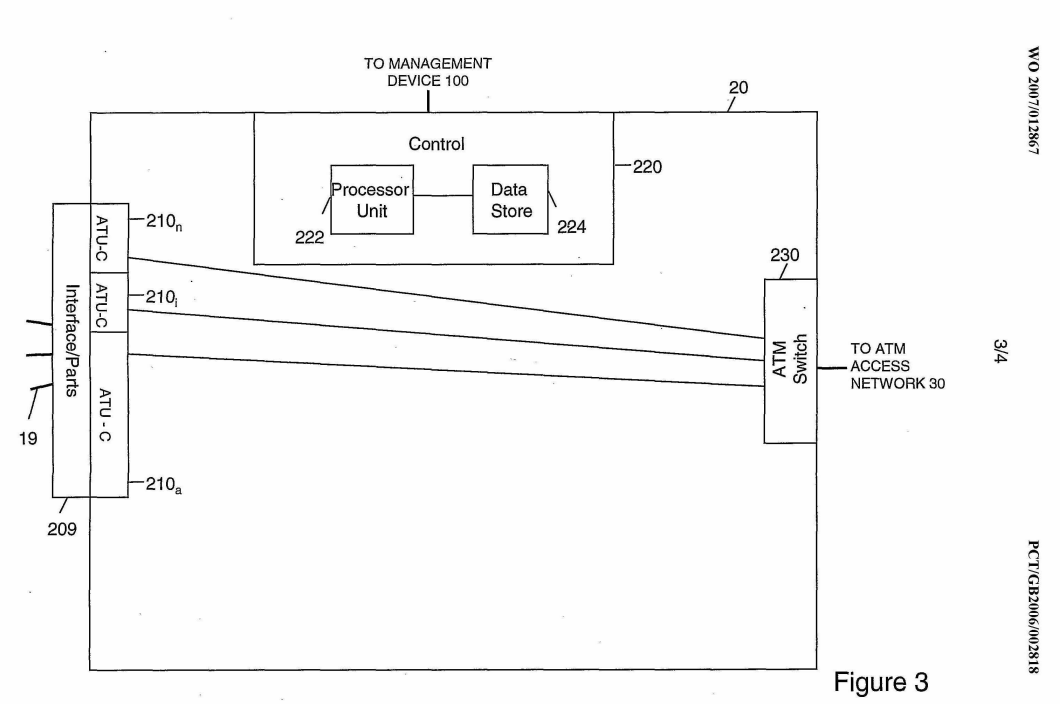

Figure 3

References

Limiting references

This place does not cover:

DSLAM modems	H04M 11/00

H04L 12/2894

{Centralized processing}

Definition statement

This place covers:

All complex traffic processing (e.g. classification, filtering, QoS, etc.) is performed on a single central chip, e.g. on the uplink card.

H04L 12/2896

{Distributed processing, e.g. on line cards}

Definition statement

This place covers:

Some or all complex traffic processing is off-loaded to the line cards, which may include dedicated processors.

Examples : US6587476, US2002159462, US2008101401.

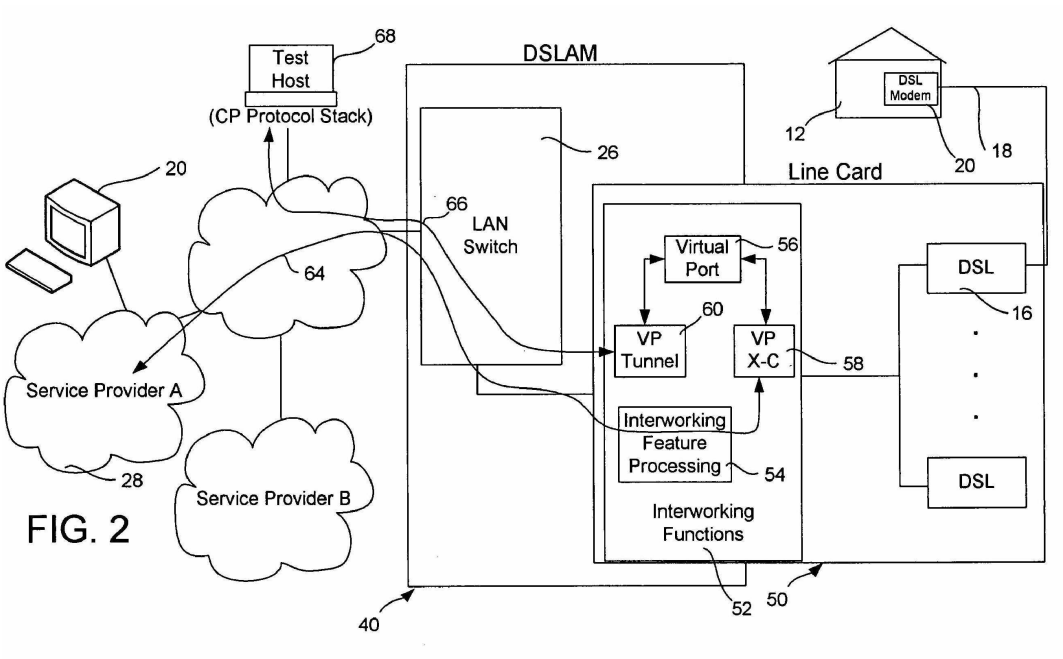

FIG. 2

H04L 12/2898

{Subscriber equipments (DSL modems H04M 11/062; cable modems H04L 12/2801)}

Definition statement

This place covers:

- Optical Network Units, Optical Line Terminals
- Set-top boxes
- Home network access point
- Cable modems in cable networks, e.g. DOCSIS

Entry concerning the design of devices carrying out generic L2 or L3 data processing operations, located at the interface between a private or home environment and the access network.

References

Limiting references

This place does not cover:

Broadband local area networks	H04L 12/2801
Home network gateways, residential gateways	H04L 12/2834

DSL modems and xDSL splitters	H04M 11/062

Special rules of classification

This subclass shall only be allocated to documents giving operational details of subscriber equipments which interact with other access network devices, e.g. via the exchange of messages. The sole description of a stand-alone end-user device without any active connection to an access network shall not be classified in H04L 12/2898.

H04L 12/40

Bus networks

Definition statement

This place covers:

A bus network includes one or a plurality of shared communication lines interconnecting at least 3 distant stations, wherein data is transferred serially in the form of frames or bitstrings along the bus.

References

Limiting references

This place does not cover:

Transmission of data and power over a link, and not over a bus network as defined above	H04L 12/10
Serial data transmission over a shared medium having a ring or star topology	H04L 12/42, H04L 12/44
Fibre-channel aspects related to topology, i.e. ring, or switch architecture	H04L 12/42, H04L 12/5696
Bus networks including at least one bridging device	H04L 12/4625
Bus networks employed restrictively for a specific automotive application (e.g. power steering, brake-by-wire)	B60R , B62D
Bus to control actuators/sensors or any other industrial appliance in an automation system	G05B 19/00
Parallel bus systems	G06F 13/00
Data transfer in the environment of a computer (ISA, PCI, USB, I2C, PCMCIA, DMA, PCI bridges...)	G06F 13/00
Point-to-point communication between 2 stations over a bus	G06F 13/4265
Wireless networks comprising several communication nodes using contention resolution mechanisms	H04W 74/08

Informative references

Attention is drawn to the following places, which may be of interest for search:

Bus systems being deployed on an airplane specifically for controlling parts of an aircraft	B64C 13/503
Daisy chain buses using an embedded synchronisation	G06F 13/426

H04L 12/40006

{Architecture of a communication node (intermediate storage or scheduling H04L 12/5694; current supply arrangements H04L 12/10)}

Definition statement

This place covers:

Details on the hardware elements comprised in a bus communication node. In particular, this class covers the inter-working of the various hardware components and implementation details of specific hardware components. A document shall get an EC code from this group only if the document deals with a particular inventive hardware or software realization. If the document includes the mere illustration of a hardware or software design for implementing a protocol, this document shall only get an Indexing Code in this group.

Example : A FlexRay communication node:

FLEXRAY™ SYSTEM ARCHITECTURE

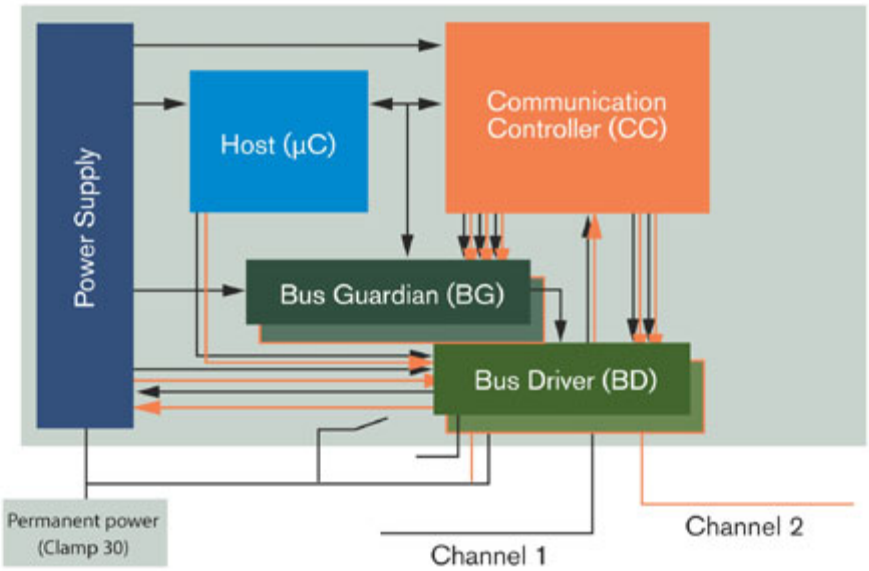

References

Informative references

Attention is drawn to the following places, which may be of interest for search:

Current supply arrangements for the communication nodes	H04L 12/10
Intermediate storage or scheduling	H04L 12/5694
Hardware architecture of a processing unit in general	G06F

H04L 12/40013

{Details regarding a bus controller}

Definition statement

This place covers:

A bus controller refers to a microprocessor that is dedicated to input and output of data by a node on a bus. Structure of a carrier sense functionality is also classified here.

H04L 12/40019

{Details regarding a bus master}

Definition statement

This place covers:

A bus master is a device controlling which node accesses the bus at particular time. See also H04L 12/403 for access control aspects

H04L 12/40026

{Details regarding a bus guardian}

Definition statement

This place covers:

A bus guardian is a device monitoring the timing of node accesses on the bus, used for instance in FlexRay systems to avoid babbling idiots (faulty, continuously sending nodes).

References

Limiting references

This place does not cover:

Passive fault-masking in a computer environment	G06F 11/18

H04L 12/40032

{Details regarding a bus interface enhancer}

Definition statement

This place covers:

Interface between the communication line and the other elements of the communication node, having some autonomous functionalities such as message pre-filtering, bus monitoring...

H04L 12/40039

{Details regarding the setting of the power status of a node according to activity on the bus}

Definition statement

This place covers:

Power management aspects, such as management of the transition between various power states (sleep, active or stand-by). These documents shall also be classified in H04L 12/12

References

Informative references

Attention is drawn to the following places, which may be of interest for search:

Arrangements for remote connection or disconnection of substations or of equipment thereof	H04L 12/12

H04L 12/40045

{Details regarding the feeding of energy to the node from the bus}

Definition statement

This place covers:

Refers to field devices for instance, which use the voltage and/or current level present on the bus to draw energy from the bus. Note that H04L 12/10 contains documents classified before 2008 having this functionality.

References

Informative references

Attention is drawn to the following places, which may be of interest for search:

Current supply arrangements	H04L 12/10

H04L 12/40052

{High-speed IEEE 1394 serial bus (bus transfer protocol on a daisy chain bus using an embedded synchronisation G06F 13/426)}

Definition statement

This place covers:

All documents dealing primarily with transmission on a Firewire bus.

References

Informative references

Attention is drawn to the following places, which may be of interest for search:

Bus transfer protocol on a daisy chain bus using an embedded synchronisation	G06F 13/426

H04L 12/40058

{Isochronous transmission}

Definition statement

This place covers:

Documents referring generally to synchronization aspects of Firewire communication, incl. jitter compensation and clock synchronizations.

H04L 12/40065

{Bandwidth and channel allocation (home automation networks H04L 12/2803; flow control H04L 12/569)}

Definition statement

This place covers:

Aspects of resource allocation for Firewire networks.

References

Limiting references

This place does not cover:

Home automation networks	H04L 12/2803

Informative references

Attention is drawn to the following places, which may be of interest for search:

Flow control aspects	H04L 12/569

H04L 12/40071

{Packet processing; Packet format (packet switches H04L 12/5696; intermediate storage or scheduling H04L 12/5694; Adaptation of digital video signals for transport over a specific network H04N 21/2381, H04N 21/4363, H04N 21/4381)}

Definition statement

This place covers:

Self-explanatory, deals with operations on packets in a Firewire bus system.

References

Informative references

Attention is drawn to the following places, which may be of interest for search:

Intermediate storage or scheduling	H04L 12/5694
Packet switches	H04L 12/5696

H04L 12/40078

{Bus configuration (home automation networks H04L 12/2803; Arrangements for maintenance or administration H04L 12/24)}

Definition statement

This place covers:

Typically bus reset operations on Firewire.

References

Limiting references

This place does not cover:

Home automation networks	H04L 12/2803

Informative references

Attention is drawn to the following places, which may be of interest for search:

Arrangements for maintenance or administration	H04L 12/24

H04L 12/40084

{Bus arbitration}

Definition statement

This place covers:

Control to the access to the communication medium on Firewire.

H04L 12/40091

{Bus bridging (LAN interconnection over a bridge based backbone H04L 12/462; single bridge functionality H04L 12/462)}

Definition statement

This place covers:

Interconnection aspects in Firewire bus systems.

References

Informative references

Attention is drawn to the following places, which may be of interest for search:

LAN interconnection over a bridge based backbone	H04L 12/462
Single bridge functionality	H04L 12/4625

H04L 12/40097

{Interconnection with other networks (LAN interconnection over a bridge based backbone H04L 12/462; single bridge functionality H04L 12/462)}

Definition statement

This place covers:

Gateway to other network sections, to other Firewire networks.

References

Informative references

Attention is drawn to the following places, which may be of interest for search:

Bridging devices in local area networks	H04L 12/462

H04L 12/40104

{Security; Encryption; Content protection (arrangements for network security H04L 29/06551)}

Definition statement

This place covers:

Security aspects in Firewire networks.

References

Informative references

Attention is drawn to the following places, which may be of interest for search:

Arrangements for network security	H04L 29/06551

H04L 12/4011

{Wireless (wireless communication networks H04W)}

Definition statement

This place covers:

Should not be used anymore for classification. Wireless communication networks are now classified in H04W.

References

Informative references

Attention is drawn to the following places, which may be of interest for search:

Wireless communication systems	H04W

H04L 12/40117

{Interconnection of audio or video/imaging devices (home automation networks H04L 12/2803; bitstream network arrangements specially adapted for distribution of digital video signals H04N 7/24)}

Definition statement

This place covers:

Interconnection with multimedia devices over a FireWire bus.

References

Informative references

Attention is drawn to the following places, which may be of interest for search:

Home automation networks	H04L 12/2803 - H04L 12/2838

H04L 12/40123

{Interconnection of computers and peripherals (printer information exchange with computer G06F 3/1293)}

Definition statement

This place covers:

Interconnection of computers with specific extension elements such as peripherals over a Firewire bus.

References

Informative references

Attention is drawn to the following places, which may be of interest for search:

Printer information exchange with computer	G06F 3/1293

H04L 12/4013

{Management of data rate on the bus (systems modifying transmission characteristics according to link quality H04L 1/0001; negotiation of transmission parameters of transmission speed prior to communication H04L 5/1446; adaptive data allocation for multicarrier modulation H04L 27/2608)}

Definition statement

This place covers:

Documents referring generally to the selection of a particular data rate on a bus network, based on different factors, i.e. instantaneous network load. Rate adaptation on a bus maybe be necessary for achieving optimal transmission performance, by finding a good trade-off between packet loss and transmission speed. A LIN bus supports for instance various bitrates.

References

Informative references

Attention is drawn to the following places, which may be of interest for search:

Systems modifying transmission characteristics according to link quality	H04L 1/00
Negotiation of transmission parameters of transmission speed prior to communication	H04L 5/1446
Adaptive data allocation for multicarrier modulation	H04L 27/2608

H04L 12/40136

{Nodes adapting their rate to the physical link properties (LAN switches H04L 49/351)}

Definition statement

This place covers:

Physical link properties include bus capacity such as 10Mbit/s or 100Mbit/s Ethernet network.

References

Informative references

Attention is drawn to the following places, which may be of interest for search:

Rate adaptation according to physical link properties such as the detection of the bus capacity being 10Mbit/s or 100Mbit/s Ethernet network at a LAN switch	H01L 29/66469

H04L 12/40143

{involving priority mechanisms (intermediate storage or scheduling H04L 12/5694; hybrid switching fabrics H04L 12/6402; time-division multiplex systems H04J 3/00)}

Definition statement

This place covers:

Documents related to the introduction of certain criteria to prioritize the transmission of data on the bus. On a vehicle bus for instance, information about car safety shall have priority over messages carrying monitoring data.

References

Informative references

Attention is drawn to the following places, which may be of interest for search:

Intermediate storage or scheduling	H04L 12/5694
Hybrid switching fabrics	H04L 12/6402
Time-division multiplexing	H04J 3/00

H04L 12/4015

{by scheduling the transmission of messages at the communication node}

Definition statement

This place covers:

Queue management at the transmitting node.

H04L 12/40156

{by using dedicated slots associated with a priority level}

Definition statement

This place covers:

In a TDMA bus communication system, certain time slots might be reserved for transmission of data having a high level of priority.

H04L 12/40163

{by assigning priority to messages according to a message field}

Definition statement

This place covers:

Typically a message field or tag indicates a priority level, which can be read by any node connected to the bus.

H04L 12/40169

{Flexible bus arrangements (arrangements for maintenance or administration involving management of faults; events, alarms H04L 12/2419; automatic restoration of network faults H04L 12/2422)}

Definition statement

This place covers:

Documents covering various flexibility aspects, such as fast network re-configuration, flexible topology change, seamless connection or disconnection of a new node to/from the bus. In general, this class covers scalability of bus networks and reconfiguration aspect.

References

Limiting references

This place does not cover:

Arrangements for maintenance or administration involving management of faults; events, alarms	H04L 12/2419
Automatic restoration of network faults	H04L 12/2422

H04L 12/40176

{involving redundancy (error detection or correction of the data by redundancy in hardware using active fault-masking in interconnections G06F 11/2002; error detection or correction of the data by redundancy in hardware using active fault-masking in storage systems using spares or by reconfiguring G06F 11/2053)}

Definition statement

This place covers:

Different forms of redundancy which do not correspond to the following related fields.

References

Limiting references

This place does not cover:

Error detection or correction of the data by redundancy in hardware using active fault	G06F 11/2017
where persistent mass storage functionality or persistent mass storage control functionality is redundant	G06F 11/2053

H04L 12/40182

{by using a plurality of communication lines}

Definition statement

This place covers:

A single bus system may comprise at least one back-up communication line, in case of failure of the main communication line. Each station has then typically two or more bus drivers, one for each communication line.

H04L 12/40189

{by using a plurality of bus systems}

Definition statement

This place covers:

Two bus systems running independently of each other may provide protection against problems affecting the whole active bus system.

H04L 12/40195

{by using a plurality of nodes}

Definition statement

This place covers:

Duplication of a part or of an entire communication node in order to ensure fast recovery from a node defect without affecting the bus operations.

H04L 12/40202

{by using a plurality of master stations}

Definition statement

This place covers:

Switching from an active master station to a back-up master station is needed for safety-critical bus systems with centralized access control. See also H04L 12/403.

H04L 12/403

with centralised control, e.g. polling

Definition statement

This place covers:

Contains documents with a central control node controlling the transmissions on the bus. Polling is known for a long time so a "new" polling scheme could be found in rather old documents (<1970).

H04L 12/4035

{in which slots of a TDMA packet structure are assigned based on a contention resolution carried out at a master unit (TDM/TDMA multiplex systems per se H04J 3/1694; hybrid switching systems H04L 12/64)}

Definition statement

This place covers:

Self-explanatory. Shall not be used for documents dealing with FlexRay in general.

References

Limiting references

This place does not cover:

Hybrid switching systems	H04L 12/64
Allocation of channels in TDM/TDMA networks	H04J 3/1694

H04L 12/407

with decentralised control

Definition statement

This place covers:

This is a subgroup with general aspects of decentralized control. It contains documents about implicit token passing and some slotted buses.

H04L 12/413

with random access, e.g. carrier-sense multiple-access with collision detection (CSMA-CD)

Definition statement

This place covers:

Deals with access schemes in which access to the medium is granted at random after an arbitration process in case several nodes send requests simultaneously (collision). CSMA/CD (carrier sense multiple access with collision detection) also called Ethernet (basic document by Xerox US4063220) is one of these schemes. Ethernet aspects not linked with CSMA/CD shall not be classified in this class, but documents concerning some specific Ethernet functionalities such as contention resolution, back-off or interframe gap shall be classified in this group.

H04L 12/4135

{using bit-wise arbitration}

Definition statement

This place covers:

This is a special case for relatively low transmission speeds and/or short buses. Nodes competing for bus access read the superposed signals back from the bus and stop transmission when the bus signal is not identical with the transmitted signal. Many bus systems used e.g. in vehicles can be found in this subgroup.

References

Limiting references

This place does not cover:

Computer buses with bit-wise arbitration	G06F 13/374

Special rules of classification

CAN bus aspects not linked with bit-wise arbitration shall not be classified in this class.

H04L 12/417

with deterministic access, e.g. token passing

Definition statement

This place covers:

Contains documents with access schemes granting access to requests within a predetermined time limit. On token buses nodes are arranged in a logical ring passing the access right (token) from node to node. Bus networks having a master are not classified here. Aspects of FlexRay related to the deterministic access to static time slots are also classified here.

H04L 12/42

Loop networks

Definition statement

This place covers:

Deals with networks in which nodes are connected in a physical ring.

H04L 12/422

{Synchronisation for ring networks (Time Division Multiplex ring networks, e.g. SDH/SONET H04J 3/085)}

Definition statement

This place covers:

Deals with link by link synchronization between nodes and network

synchronization.

References

Limiting references

This place does not cover:

Synchronization in general	H04J 3/06, H04L 7/00
for ring networks	H04J 3/085

Informative references

Attention is drawn to the following places, which may be of interest for search:

Time division multiplex systems	H04J 3/00

Special rules of classification

Double classification with H04J 3/00 is allowed.

H04L 12/423

with centralised control, e.g. polling

Definition statement

This place covers:

Same as for bus networks but in a physical ring network.

References

Informative references

Attention is drawn to the following places, which may be of interest for search:

Bus networks with centralized control	H04L 12/403

H04L 12/427

with decentralised control

Definition statement

This place covers:

Analog to bus networks, see H04L 12/417.

References

Limiting references

This place does not cover:

Bus networks with decentralized control	H04L 12/407

H04L 12/43

with synchronous transmission, e.g. time division multiplex [TDM], slotted rings

Definition statement

This place covers:

Slotted rings; can be with fixed time slot allocation to the nodes or with access schemes for transmission access to a part of the bandwidth (slot).

H04L 12/433

with asynchronous transmission, e.g. token ring, register insertion

Definition statement

This place covers:

Nodes having the access right (token) can transmit. When finished, the token is other nodes is buffered in a register until a node has finished its own transmission. This is the main group for FDDI and Fiber Channel rings when the access method is the issue.

H04L 12/437

Ring fault isolation or reconfiguration {(for SDH/SONET ring networks H04J 3/085)}

Definition statement

This place covers:

Rings are vulnerable to faults. This subgroup contains documents dealing with recovery from faults like loop-backs or subrings when a ring systems is cut.

References

Limiting references

This place does not cover:

Fault recovery in general	H04L 12/2419

Fault recovery systems for SDH/SONET(Protection Switching) ring networks	H04J 3/085

H04L 12/44

Star or tree networks

Definition statement

This place covers:

Deals with networks in a physical star or tree configuration.

In case of Ethernet repeaters or hubs, transmission is broadcast and the bus access schemes are applied (e.g. Ethernet in 10baseT).

H04L 12/46

Interconnection of networks

Definition statement

This place covers:

- Interconnection of network segments of different types. e.g. between Fire Wire and Ethernet segments;
- Internetworking in CEBUS, MAP/TOP, CAN and other application oriented topologies;
- Repeaters (LAN segmentation).

This group contains general documents on internetworking in packet-switched networks.

References

Limiting references

This place does not cover:

Coupling between buses internal to a computer	G06F 13/4004

H04L 12/4604

{LAN interconnection over a backbone network, e.g. Internet, Frame Relay}

Definition statement

This place covers:

- Header group for network backbone functionality
- SONET, SMDS, DQDB
- XNS, SNA, CATV
- Internet

References

Limiting references

This place does not cover:

TCP/IP and the Internet protocol itself	H04L 29/06095

H04L 12/4608

{LAN interconnection over ATM networks}

Definition statement

This place covers:

- LAN emulation
- IP or other proprietary protocols (e.g. IPX, SNA, netBIOS, Appletalk...) over ATM. MPOA.
- VP switching for multiplexing connections in VLAN/BVPN Connectionless support in ATM for LAN interconnection (type D service. I.364 rec., ATM Forum's scheme).
- Some documents about remote address resolution (ARP,NHRP).

H04L 12/4612

{LAN interconnection over narrowband networks, e.g. N-ISDN, PSTN, X.25}

Definition statement

This place covers:

- Internetworking over the PSTB
- Narrowband ISDN both using BA or PR access, Channel B or D
- X.25 based internetworks

H04L 12/4616

{LAN interconnection over a LAN backbone}

Definition statement

This place covers:

Contains mainly documents about LAN interconnection using a FDDI backbone. Do not forget that some SNA implementations use a Token Ring backbone, so if you do not find your document here have a look to the H04L 12/4604 just in case.

H04L 12/462

{LAN interconnection over a bridge based backbone}

Definition statement

This place covers:

Topology aspects: where the bridges are placed. Bridging different type 802.X LAN's. General documents on Source Routing, Spanning Tree or DLS (no much detail on how the actual routing is carried out.

References

Limiting references

This place does not cover:

Routing of packets	H04L 12/5689

Informative references

Attention is drawn to the following places, which may be of interest for search:

Routing tree calculation	H04L 45/48
Layer 2 routing, e.g. Ethernet-based MAN's	H04L 45/66

Special rules of classification

Spanning tree protocol shall be classified in this group, but also possibly H04L 12/5689 and subgroups when applied on a generic routing protocol that can be applied on Layer 2 as well as Layer 3 networks.

H04L 12/4625

{Single bridge functionality, e.g. connection of two networks over a single bridge}

Definition statement

This place covers:

Bridge functionalities.

It covers:

- Multistandard for heterogeneous 802.X LAN environment
- Address learning and filtering with the suitable table lookup or CAM techniques. Address caching.
- Internal buffer and memory management.
- Bridges doing repeater functions or routing (Brouters)

References

Limiting references

This place does not cover:

Router functionalities or routing protocols	H04L 12/5689, H04L 12/5696

Informative references

Attention is drawn to the following places, which may be of interest for search:

Fast packet switching	H04L 12/5696

Special rules of classification

It is difficult to determine whether to begin the search in H04L 12/462 or in H04L 12/4625. As a rule of thumb you could say that bridge/router functionality that does not require cooperation among bridges/ routers, should be classified in H04L 12/4625. Therefore, network aspects that involve exchange among bridges/routers are meant to be in H04L 12/462.

H04L 12/4633

{Interconnection of networks using encapsulation techniques, e.g. tunneling}

Definition statement

This place covers:

Encapsulation is the embedding of a protocol in another protocol at the same or different OSI layer. This technique is often used in a backbone to be able to deal with a plurality of end user protocols using a common transport entity.

Tunneling is a very important part of this group (e.g. L2TP).

References

Limiting references

This place does not cover:

Pseudo-wire emulation, e.g. IETF WG PWE3	H04L 45/68

Informative references

Attention is drawn to the following places, which may be of interest for search:

Point-to-point connection between the data network and the subscriber in access networks (e.g. PPPoX protocols)	H04L 12/2859
Virtual LANs	H04L 12/4641
Protocol conversion	H04L 29/06068
VPN tunnels for security	H04L 29/06551

H04L 12/4637

{Interconnected ring systems}

Definition statement

This place covers:

- Complex meshes of rings; Topological aspects
- MAN, WAN ring based architectures
- Hierarchical ring topologies
- Streets of Manhattan, interlaced rings and similar architectures

References

Informative references

Attention is drawn to the following places, which may be of interest for search:

FDDI WANs	H04L 12/4616

H04L 12/4641

{Virtual LANs, VLANs, e.g. virtual private networks [VPN] (virtual private networks for security H04L 29/06612; routing of packets H04L 12/5689; encapsulation techniques H04L 12/4633; LAN interconnection over a bridge based backbone H04L 12/462; packet switches H04L 12/5696)}

Definition statement

This place covers:

Virtual local area network, virtual LAN or VLAN. A group of hosts with a common set of requirements that communicate as if they were attached to the same broadcast domain, regardless of their physical location. Networks with the same attributes as a physical local area network (LAN), but that allow for end stations to be grouped together even if they are not located on the same network switch.

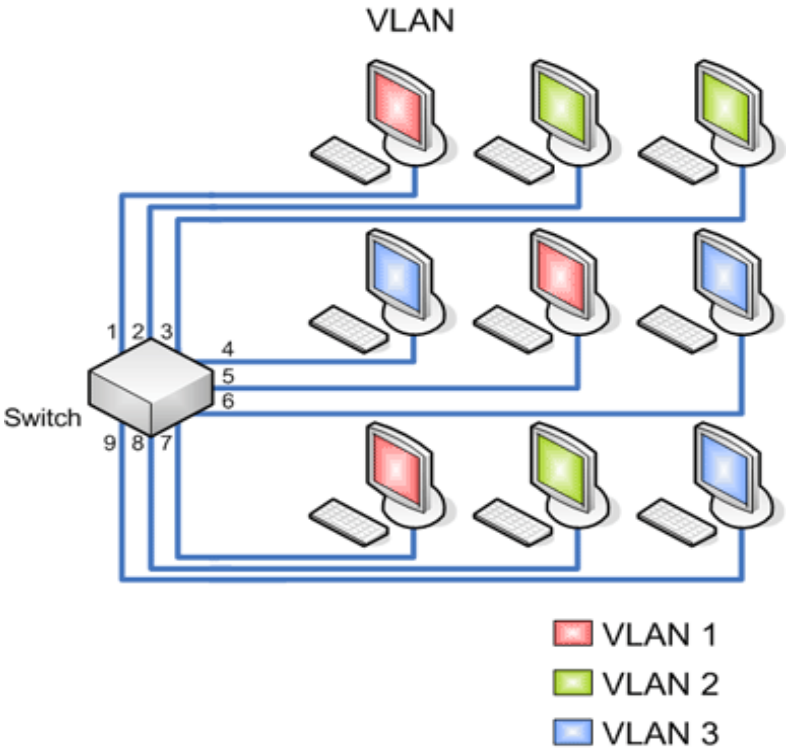

References

Limiting references

This place does not cover:

LAN interconnection over a bridge based backbone	H04L 12/462
Encapsulation techniques	H04L 12/4633
Routing of packets	H04L 12/5689
Packet switches	H04L 12/5696
Virtual private networks for security	H04L 29/06612

H04L 12/4645

{Details on frame tagging (routing of packets H04L 12/5689; support for virtual LAN H04L 49/354)}

Definition statement

This place covers:

Details on tagging of a frame with VLAN information, involving mainly the use of a dedicated field for tagging a frame. When a packet enters a VLAN, a switch adds a VLAN field to the packet including a VLAN ID, the tag. Covers converting untagged frames to tagged frames. A typical VLAN tagged frame:

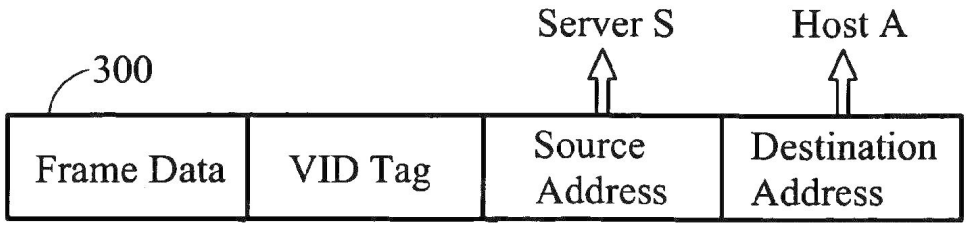

References

Limiting references

This place does not cover:

Routing of packets	H04L 12/5689
Routing of packets using label swapping, e.g. MPLS	H04L 45/50
Switching devices with support for virtual LAN	H04L 49/354

Special rules of classification

Multi-tagging of frames shall not be classified in H04L 12/4645, only in H04L 12/465 or the subgroups of it.

H04L 12/465

{wherein a single frame includes a plurality of VLAN tags}

Definition statement

This place covers:

Description and creation of single frames including a plurality of VLAN tags.

Frequently refers to QinQ (see IEEE standard 802.1ad) and the derivatives of this protocol. Covers tagging an already tagged packet, thereby producing a "multiple-tagged" frame, or a VLAN stack. A typical QinQ frame:

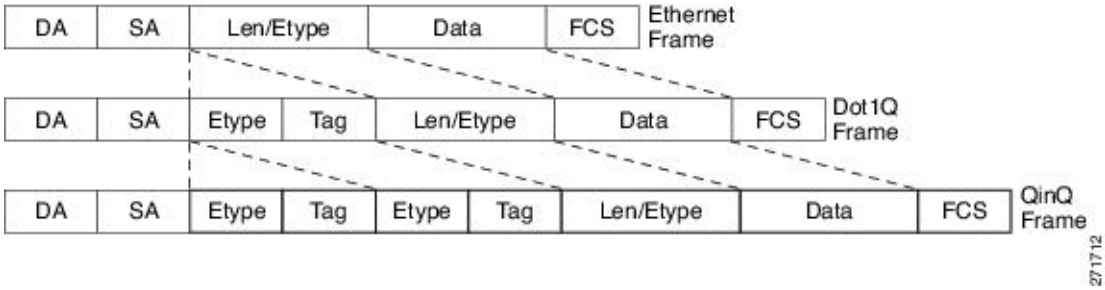

References

Limiting references

This place does not cover:

Encapsulation of packets	H04L 12/4633

Special rules of classification

A document shall only be allocated this class if no relevant subgroup of this class can be found. On the other hand, different classes from this group (i.e. H04L 12/4654, H04L 12/4658, H04L 12/4662) might be assigned to a single document.

H04L 12/4654

{wherein a VLAN tag represents a customer VLAN, e.g. C-Tag}

Definition statement

This place covers:

In multi-tagged frames, a VLAN tag representing a customer VLAN is a VLAN tag uniquely associated to a particular end user, subscriber or

local network entity (computer, user station).

H04L 12/4658

{wherein a VLAN tag represents a service provider backbone VLAN, e.g. B-Tag, S-Tag}

Definition statement

This place covers:

Covers the outer tagging of Ethernet packets in PBB (Provider Backbone Bridge) networks, see IEEE Standard 802.1ah. A service provider backbone VLAN spans over a carrier network, not over a single LAN

References

Informative references

Attention is drawn to the following places, which may be of interest for search:

Encapsulation techniques	H04L 12/4633

H04L 12/4662

{wherein a VLAN tag represents a service instance, e.g. I-SID in PBB}

Definition statement

This place covers:

Covers documents associating a VPN with a PBB and assigning an I-SID. FIG. 3 below (US2008170573) is a simplified representation of a frame format 150 for VPN data packets transmitted through a PBB tunnel. The frame format 150 includes a PBB header 152 comprised of a backbone destination address (B-DA) 154, a backbone source address (B-SA) 156, a backbone VLAN ID (B-VID) 158, and a backbone I-component service ID (I-SID) 160.

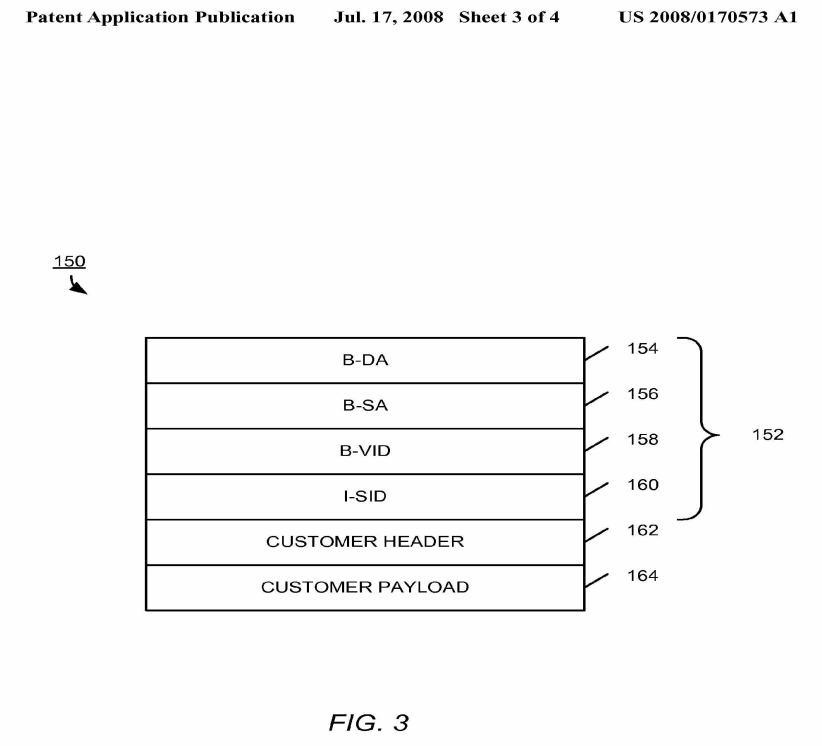

Glossary of terms

In this place, the following terms or expressions are used with the meaning indicated:

PBB	Provider Backbone Bridge

H04L 12/4666

{Operational details on the addition or the stripping of a tag in a frame, e.g. at a provider edge node}

Definition statement

This place covers:

Covers operations carried out on a packet header, such as adding and/or removing tags, usually according to a particular algorithm or specific structure. An emphasis is put on the operational details of adding or stripping VIDs, at a particular node, e.g. US2010226368:

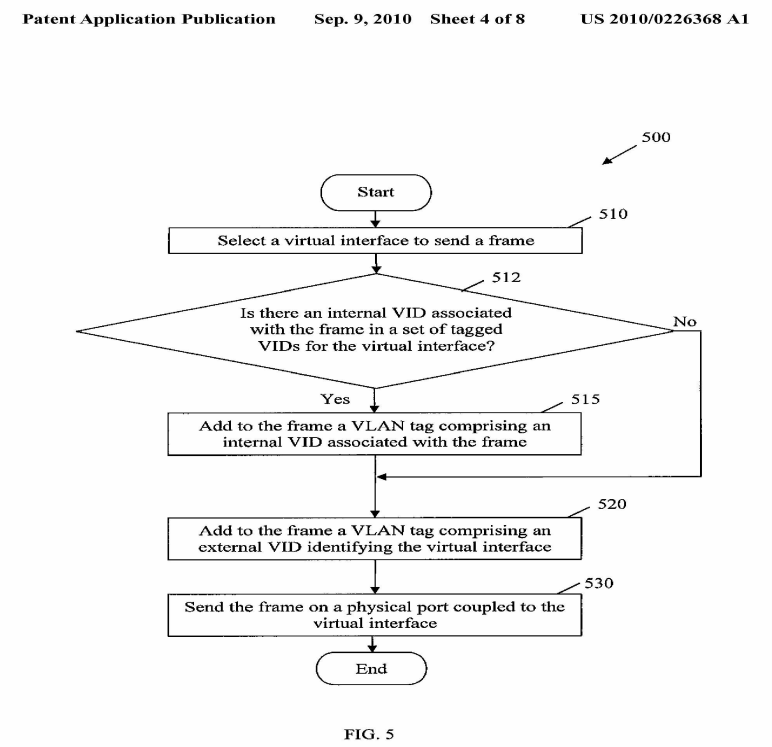

Special rules of classification

The mere tagging of packets or removal of tags without particular operational details shall only be classified in H04L 12/4645 or in the subgroups of H04L 12/465

H04L 12/467

{Arrangements for supporting untagged frames, e.g. port-based VLANs}

Definition statement

This place covers:

The port is assigned to a specific VLAN independent of the user or system attached to the port. All users attached to the port should be members in the same VLAN. Usually the port configuration is static. A port based VLAN switch determines the membership of a data frame by examining the configuration of the port that received the transmission.

Special rules of classification

Classes from the H04L 12/4645 subgroups and the class H04L 12/467 might be allocated to a single document only if two VLAN operational modes (i.e. tag-based VLANs and port-based VLANs) are presented in the document as part of the invention

H04L 12/4675

{Dynamic sharing of VLAN information amongst network nodes (configuration of the network or of network elements H04L 12/2424)}

Definition statement

This place covers:

Sharing of information between networks elements: information about the identifier, about the member status, about the port based VLAN distribution. Sometimes this layer 2 information is intended to be displayed or monitored. Even though failure recovery is not covered in this class, Layer-2 information might be dynamically shared between the elements on the network after detection of a network failure.

References

Limiting references

This place does not cover:

Failure recovery	H04L 12/2419
Configuration of the network, or of network elements	H04L 12/2424

H04L 12/4679

{Arrangements for the registration or de-registration of VLAN attribute values, e.g. VLAN identifiers, port VLAN membership}

Definition statement

This place covers:

Registration or de-registration of VLAN memberships. Also includes removing, discovering and identifying VLAN members. Covers also the exchange of messages for modifying an entry in a mapping table for switches supporting port-based VLANs.

References

Limiting references

This place does not cover:

Configuration of switching devices	H04L 12/4641

H04L 12/4683

{characterized by the protocol used}

Definition statement

This place covers:

Details on a specific standardized or proprietary protocol for maintaining a VLAN, for registering, de-registering VLAN members

References

Limiting references

This place does not cover:

Group membership management	H04L 12/244

Special rules of classification

Only for defining particular routines, packets types or format when maintaining VLANs. Can include extensions or modifications of an existing protocol

H04L 12/4687

{MVRP [multiple VLAN registration protocol]}

Definition statement

This place covers:

A commonly-used VLAN registration protocol generic framework defined by the IEEE 802.1ak revision to the IEEE 802.1Q standard.

H04L 12/4691

{GVRP [GARP VLAN registration protocol]}

Definition statement

This place covers:

This is a standards-based Layer 2 network protocol, for automatic configuration of VLAN information on switches. It was defined in the 802.1ak amendment to 802.1Q-2005.

Glossary of terms

In this place, the following terms or expressions are used with the meaning indicated:

GARP	Generic Attribute Registration Protocol

Synonyms and Keywords

In patent documents, the following abbreviations are often used:

MVRP	Multiple VLAN Registration Protocol

H04L 12/4695

{VTP [VLAN trunking protocol]}

Definition statement

This place covers:

VTP is a proprietary protocol that propagates the definitions of Virtual Local Area Networks (VLAN) on a whole local area network.

H04L 12/56

{Packet switching systems}

Definition statement

This place covers:

Basic functionality of packet switching networks. Namely: routing, flow control, admission control, switching architectures and other general issues on packetized data handling.

Relationships with other classification places

Examples of places where the subject matter of this class is covered when specially adapted, used for a particular purpose, or incorporated in a larger system: Arrangements for packet switching specially adapted for wireless networks H04W

References

Limiting references

This place does not cover:

Interprocessor communication	G06F 15/163
Packet based communication in satellite networks	H04B 7/185
Networks specially adapted for the exchange of pictorial information	H04N 7/00

Informative references

Attention is drawn to the following places, which may be of interest for search:

Error detection or correction	H04L 1/00
Packet multiplexing	H04J

Synonyms and Keywords

In patent documents, the following abbreviations are often used:

ATM	Asynchronous Transfer Mode
TCP/IP	Transmission Control Protocol/Internet Protocol

H04L 12/5601

{Transfer mode dependent, e.g. ATM}

Definition statement

This place covers:

Asynchronous Transfer Mode(ATM) technical aspects.

References

Limiting references

This place does not cover:

Routing in wireless networks	H04W 40/00

H04L 12/58

Message switching systems, {e.g. electronic mail systems}

Definition statement

This place covers:

This is a subgroup of H04L 12/00 and therefore covers message switching systems in data switching networks. A message switching system is a system that switches messages on the application layer in the user plane. The messages have one or more individually identified recipients, although a user may have defined them to be part of a distribution list. Typical examples are electronic mail systems and instant messaging systems.

References

Limiting references

This place does not cover:

Message passing systems for program control, e.g. messaging middleware	G06F 9/546
Computer aided management of electronic mail, such as the handling of e-mail on a local workstation	G06Q 10/107
Message management on portable communication terminals, e.g. mobile telephones	H04M 1/72547
Voice mail systems for telephonic communication	H04M 3/533
Client devices for e-mailing in television systems	H04N 21/4786
Messaging specially adapted for wireless communication networks, e.g. SMS	H04W 4/12, H04W 88/184

H04L 12/581

{Real time or near real time messaging, e.g. instant messaging [IM]}

Definition statement

This place covers:

Further details of subgroups

This subgroup contains documents relating to messaging systems in which the message is sent to a recipient who is reachable at the time the message is sent. Messages for recipients that are not reachable are lost.

- Chat rooms are classified in H04L 12/1813.
- H04L 12/5815: Use or manipulation of presence information in messaging
- Documents relating to presence management as such are classified in H04L 29/08684.
- H04L 12/583: This subgroup contains documents where there is an intentional adaptation of the content. This can include the deletion of graphics or attachments or removing unwanted parts of the message, e.g. parental guidance.
- H04L 12/5835: This subgroup contains documents where the format of the message is adapted, e.g. changing a picture from BITMAP to JPEG format or text-to-speech conversion. Although this may lead to loss of information due to different compression techniques or content that cannot be converted, the content is not intentionally adapted. This subgroup also contains documents where the message as a whole is converted, e.g. SMS to e-mail.
- H04L 12/584: This subgroup contains documents where the transmission or handling of the message in the network is influenced by the fact that it includes annexed information.

- H04L 12/5845: This subgroup contains documents where the transmission or handling of the message in the network is influenced by the fact that it includes multimedia information.
- H04L 12/585: This subgroup contains documents dealing with filtering in general and spam in particular. If malicious content is involved, such as computer viruses, see also H04L 29/06877. Messages are either blocked or sent onwards; adaptation of the message in order to remove unwanted content is classified in H04L 12/583.
- H04L 12/5855: Documents classified in this subgroup typically relate to systems where an intermediate node between the node sending the message and the node ultimately receiving the message forwards messages depending on preferences indicated in a profile. For profiles in general, see H04L 29/08918.
- H04L 12/5865:This subgroup contains documents where the transmission or handling of the message in the network is influenced by the location of the sender's and/or recipient's terminal.
- H04L 12/587: This subgroup contains documents related to ways of notifying a user that a message has been received, for example if the user is not online when an e-mail is received at the server. User interface notifications created locally on the client device, such as pop-ups, are classified elsewhere (see G06Q 10/107 , H04M 1/72547 and G06F 9/4443).
- H04L 12/5875: This subgroup contains documents where the sender receives a return message when the recipient has received or read the message, or when a fault occurs such that the recipient does not receive the message.
- H04L 12/588: This subgroup contains documents where the structure or characteristics of a social network is used for transmitting or handling a message in the network.
- H04L 12/5885: This subgroup contains documents where the progress of a message through the network is recorded, for example in a log file. A common usage case is that proof must be provided that a user has received a specific message, e.g. due to legal requirements.
- H04L 12/589 :This subgroup contains documents where the user can access his messages in different, user selected ways. For example, the user can access his e-mail using his telephone thanks to text-to-speech conversion. The message is very often retained in its original form on the server or converted into a common format. Documents that also disclose details about format conversion of messages should additionally be classified in H04L 12/5835.
- H04L 12/5895: This subgroup contains documents where the wireless nature of the system has an impact on the messaging system itself, for example unreliable or intermittent network connections, or bandwidth constraints. Documents concerning multimedia messaging, MMS, are also classified here. Documents concerning the service centre of the short message service, SMS, or the signalling between and transmission of the message to or from the service centre and the mobile telephone are classified in H04W 4/14 or H04W 88/184. Other aspects of the SMS service are classified here.

Glossary of terms

In this place, the following terms or expressions are used with the meaning indicated:

Instant messaging, IM	Instant messaging is data exchange in real-time between at least two end users connected to a packet-switching network where the users are aware of the identity and the presence of the other party or parties before starting the data exchange.
Chat room	A chat room is a special type of computer conference where the users normally are not aware of the (true) identities of other participants' before joining the chat. The chat room application executes mainly on a server which is often accessed through a web browser. No participant has control over the admission of other participants.

Patent Application Publication Apr. 9, 2009 Sheet 4 of 7 US 2009/0092043 A1

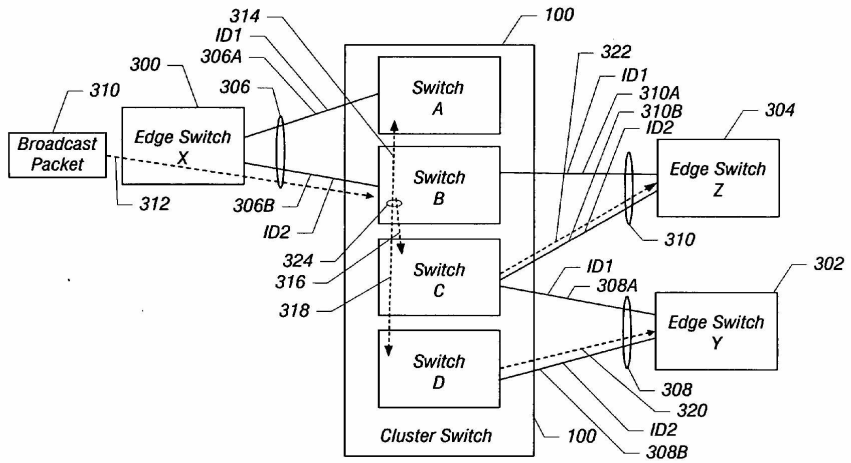

FIG. 4

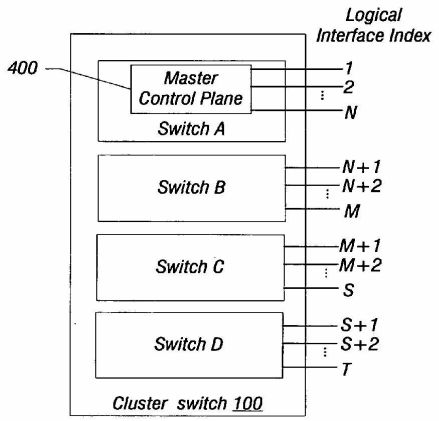

FIG. 5

H04L 13/00

Details of the apparatus or circuits covered by groups H04L 15/00 or H04L 17/00

References

Limiting references

This place does not cover:

Apparatus or local circuits for transmitting or receiving dot-and-dash codes	H04L 15/00
Apparatus or local circuits for transmitting or receiving codes wherein each character is represented by the same number of equal-length code elements	H04L 17/00

H04L 15/00

Apparatus or local circuits for transmitting or receiving dot-and-dash codes, e.g. Morse code (teaching apparatus therefor G09B; keyboard switches in general H01H 13/70, H03K 17/94; telegraph tapping keys H01H 21/86; coding in connection with keyboards or like devices, in general H03M 11/00)

References

Limiting references

This place does not cover:

Educational or demonstration appliances; appliances for teaching or communicating with, the blind, deaf or mute; models; planetaria; globes; maps; diagrams	G09B
having a plurality of operating members associated with different sets of contacts	H01H 13/70
Switches with abutting contact carried by operating part	H01H 21/86
characterised by the way in which the control signal is generated	H03K 17/94
coding in connection with keyboards or like devices	H03M 11/00

H04L 17/00

Apparatus or local circuits for transmitting or receiving codes wherein each character is represented by the same number of equal-length code elements, e.g. Baudot code (keyboard switches in general H01H 13/70, H03K 17/94; coding in connection with keyboards or like devices, in general H03M 11/00)

References

Limiting references

This place does not cover:

having a plurality of operating members associated with different sets of contacts	H01H 13/70
characterised by the way in which the control signal is generated	H03K 17/94
coding in connection with keyboards or like devices	H03M 11/00

H04L 23/00

Apparatus or local circuits for systems other than those covered by groups H04L 15/00 - H04L 21/00

References

Limiting references

This place does not cover:

Apparatus or local circuits for transmitting or receiving dot-and-dash codes	H04L 15/00 - H04L 21/00

H04L 23/02

adapted for orthogonal signalling

Definition statement

This place covers:

Code Shift Keying and CCK (Complementary Code Keying).

The generation of sequences, like orthogonal CAZAC, Zadoff-Chu or Generalized Chirp sequences that are used for signalling purposes.

References

Informative references

Attention is drawn to the following places, which may be of interest for search:

Codes types for Code Division Multiplex systems (CDMA)	H04J 13/0007
Generation of orthogonal codes for CDMA	H04J 13/12

H04L 25/00

Baseband systems

Definition statement

This place covers:

Baseband aspects of digital data transmission.

Arrangements for supplying electrical power along data transmission lines.

Channel estimation techniques.

Arrangements for detecting the data rate of an incoming signal.

Arrangements for coupling to transmission lines.

Line equalizers (digital).

Shaping networks in transmitter or receiver.

Digital equalizers: structure and adaptation algorithms.

Arrangements involving sequence estimation techniques.

Electric or magnetic storage of signals before transmitting or retransmitting for changing the transmission rate.

Decision circuits providing symbol by symbol detection; DC level restoring means; Bias distortion correction.

Modifications for reducing interference in line transmission.

Digital repeater/relay circuits.

Line codes.

Pulse width modulation; pulse position modulation.

References

Limiting references

This place does not cover:

Error correction coding	H04L 1/004
Arrangements for synchronising receiver with transmitter	H04L 7/00
Joint detection techniques in CDMA	**H04B1/70105**
Interference related aspects of DSSS	H04B 1/7097
Systems for transmitting signals via power distribution lines	H04B 3/54
Details on optical domain processing	H04B 10/516

Informative references

Attention is drawn to the following places, which may be of interest for search:

Bus networks	H04L 12/40
Digital adaptive filters	H03H 21/0012
Matched filters	H03H 21/0018
Kalman filters	H03H 21/003
Circuits in general for handling pulses	H03K
Coupling arrangements in general	H03K 19/0175
Conversion to or from representation by pulses	H03M 5/00
Coding in general	H03M 13/00
Details in line transmission systems in general	H04B 3/02
Echo cancellation	H04B 3/20
Reducing cross-talking	H04B 3/32
MIMO diversity systems	H04B 7/0413
Feedback content	H04B 7/0621
Wireless repeaters in general	H04B 7/15
Modelling the propagation channel	H04B 17/391
Interference aspects in orthogonal multiplex systems (i.e. using Walsh codes)	H04J 11/0023

Special rules of classification

The groups under H04L 2025/0335 classify the type of signal the equalizer is intended for.

The groups under H04L 2025/03433 provide further details on the equalizer structure implementation.

The groups under H04L 2025/03592 deal with details of the adaptation algorithms for equalisation.

The groups under H04L 2025/03777 provide details on signalling.

Glossary of terms

In this place, the following terms or expressions are used with the meaning indicated:

DFE	Decision Feedback Equaliser

SVD	Singular Value Decomposition
FIR	Finite Impulse Response
FDE	Frequency Domain Equalizer
GPRS	General Packet Radio Service
ICI	Inter-Carrier Interference
ISI	Inter-Symbol Interference
LLR	Log-Likelihood Ratio
LMMSE	Linear Minimum Mean Squared Error
LMS	Least Mean Square
LS	Least Squares
MAP	Maximum A-posteriori Probability
MLD	Maximum Likelihood Detector
MMSE	Minimum Mean Squared Error
RLS	Recursive Least Square

Synonyms and Keywords

In patent documents "pilot signals" can be called sometimes "Reference signals", "Sounding signals" or "Training signals".

H04L 25/0206

{of each channel individually}

Special rules of classification

This subgroup should not be used for classifying. Instead H04L 25/0204 should be given.

H04L 25/0208

{of the composite channel}

Special rules of classification

This subgroup should not be used for classifying. Instead H04L 25/0204 should be given.

H04L 25/0212

{of impulse response}

Definition statement

This place covers:

The delay spread estimation.

H04L 25/0226

{sounding signals per se}

Definition statement

This place covers:

The structure of the sounding signals or the pilot pattern. For details of the allocation of the sounding signals: H04L 5/0048.

H04L 25/0228

{with direct estimation from sounding signals}

Definition statement

This place covers:

This group answer the question of how the sounding signals are used to derive an estimation. For example, by averaging.

H04L 25/023

{with extension to other symbols}

Definition statement

This place covers:

Use of data (in addition to the sounding signals) for channel estimation

H04L 25/0236

{using estimation of the other symbols}

Definition statement

This place covers:

Iterative channel estimation for the same symbol, for example the EM (maximum expectation).

H04L 25/0238

{using blind estimation}

Definition statement

This place covers:

Using only data per se.

H04L 25/0246

{with factorisation}

Definition statement

This place covers:

For example: Cholesky, LU.

H04L 25/0248

{Eigen-space methods}

Definition statement

This place covers:

Singular value decomposition, SVD.

H04L 25/025

{using least-mean-square [LMS] method}

Definition statement

This place covers:

All iterative algorithm (not for the same symbol), for example: RLS.

H04L 25/026

{Arrangements for coupling transmitters, receivers or transceivers to transmission lines; Line drivers (duplexing arrangements H04L 5/14)}

References

Limiting references

This place does not cover:

Line drivers (duplexing arrangements	H04L 5/14

Special rules of classification

This group should not be used. Subject-matter is classified under H04L 25/0264.

H04L 25/0262

{Arrangements for detecting the data rate of an incoming signal}

Definition statement

This place covers:

This involves frequency estimation or detection, but not synchronisation.

H04L 25/0278

{Arrangements for impedance matching}

Definition statement

This place covers:

The arrangements are at either end.

H04L 25/028

{Arrangements specific to the transmitter end}

Definition statement

This place covers:

How to couple the driver to the transmission line or how to configure the driver.

H04L 25/0288

{the shape being matched to the transmission line (pre-equalisation per se H04L 25/03343)}

Definition statement

This place covers:

Implies some knowledge of the actual line, although it might be rather vague, such as "this is 100 m long". Thus, the coupling provides the pre-emphasis, otherwise, if it is not in the coupling, H04L 25/03885 is the proper place to classify.

References

Limiting references

This place does not cover:

the shape being matched to the transmission line (pre-equalisation per se	H04L 25/03343

H04L 25/03006

{Arrangements for removing intersymbol interference}

Definition statement

This place covers:

The subgroups under H04L 25/03006 cover digital equalisation and detection techniques. Digital equalisers not only try to make the channel flat and remove ISI, but they also implement detection and decision.

H04L 25/03057

{with a recursive structure (H04L 25/03031 takes precedence)}

Definition statement

This place covers:

For example, DFE equalisers.

H04L 25/03178

{Arrangements involving sequence estimation techniques}

Definition statement

This place covers:

MLSE techniques, and in general the estimation of a sequence of symbols (not just one symbol).

In the case of multiuser environment, it covers the estimation of the different users.

H04L 25/03305

{Joint sequence estimation and interference removal (joint detection of several desired signals H04L 25/03331)}

Definition statement

This place covers:

The cases where desired user is estimated and the other users are seen as interferences, such that their estimation is removed (for example, by subtraction).

References

Limiting references

This place does not cover:

Joint sequence estimation and interference removal (joint detection of several desired signals	H04L 25/03331

H04L 25/03343

{Arrangements at the transmitter end}

Definition statement

This place covers:

Pre-equalisation.

Pre-coding for MIMO channels can be seen as a pre-equaliser or as a beam-former.

The selection of codebook or precoding matrix for MIMO diversity systems is classified under H04B 7/0456, while the design of the codebook matrices is classified under H04L 25/03898.

H04L 2025/03426

{transmission using multiple-input and multiple-output channels}

Definition statement

This place covers:

Not limited to radio systems but also covers the case of cross-talk between cables as a MIMO system.

H04L 2025/03477

{not time-recursive}

Definition statement

This place covers:

For example: FFF (feed forward filter).

H04L 2025/03808

{Transmission of equaliser coefficients}

Definition statement

This place covers:

The cases of the feedback of codebook index to be able to choose a precoding matrix at the transmitter.

H04L 25/067

{providing soft decisions, i.e. decisions together with an estimate of reliability (H04L 25/068 and H04L 25/069 take precedence; sequence estimation techniques H04L 25/03178)}

Definition statement

This place covers:

When the soft decisions are part of a sequence estimation, then the place to classify is H04L 25/03318, otherwise, when the soft decisions are symbol by symbol is classified in H04L 25/067.

References

Limiting references

This place does not cover:

Sequence estimation techniques	H04L 25/03178
By sampling faster than the nominal bit rate	H04L 25/068
By detecting edges or zero crossings	H04L 25/069

H04L 25/14

Channel dividing arrangements {in which a single bit stream is divided between several baseband channels and reassembled at the receiver}

Definition statement

This place covers:

The parallel transmission of a single bit stream and the reassembling (skew compensation) of all the content of the parallel channels at the receiver in order to retrieve the single bit stream.

H04L 25/22

Repeaters for converting two wires to four wires (in general H04B); Repeaters for converting single current to double current

Definition statement

This place covers:

Wired digital repeaters. For wireless repeaters see classes under H04B 7/15.

References

Limiting references

This place does not cover:

Repeaters for converting two wires to four wires	H04B

H04L 25/4904

{using self-synchronising codes, e.g. split-phase codes}

Definition statement

This place covers:

For example: Manchester code; Biphase space or mark code (e.g. double frequency code).

H04L 25/4917

{using multilevel codes}

Definition statement

This place covers:

For example: PAM with more than 2 levels.

H04L 25/4927

{using levels matched to the quantisation levels of the channel}

Definition statement

This place covers:

PCM modems V.90.

H04L 25/497

by correlative coding, e.g. partial response coding or echo modulation coding {transmitters and receivers for partial response systems (transversal equalizers H04L 25/03; partial response continuous phase modulation systems H04L 27/18)}

Definition statement

This place covers:

For example: Tolimson-Harashima precoding, Trellis precoding, GPRS.

References

Limiting references

This place does not cover:

response systems (transversal equalizers	H04L 25/03
partial response continuous phase modulation systems	H04L 27/18

H04L 27/00

Modulated-carrier systems {(code shift keying in combination with frequency multiplexing H04L 5/06; simultaneous bidirectional transmission of ac signals H04L 5/143; code shift keying H04L 23/02; polarisation shift keying H04B 14/008; transmission of data during the active part of a television frame H04N 7/025)}

Definition statement

This place covers:

Modulated-carrier systems.

Passband aspects of data transmission, e.g. modulating and demodulating, arrangements for provision and recovery of carriers.

The most fundamental digital modulation techniques: ASK, FSK, PSK and QAM.

Multicarrier modulation systems.

The modulated carrier systems covered in this groups are independent on the type of physical signal, i.e. the signal can be audio, RF, optical,..., but the signals must be digital.

Relationships with other classification places

When the multiple access scheme relies on the use of multicarrier signals,

and if what is important is how the signal is modulated/demodulated, or "hardware" aspects in the transmitter or the receiver to produce or recover (like synchronisation) such signal or aspects related to the peak power reduction, then the classes under H04L 27/2601 are relevant. Otherwise, to indicate that the signal involved is, for example, an OFDM signal, then the class under H04L 5/0007 is used instead.

References

Limiting references

This place does not cover:

Block-coded modulation	H04L 1/0058
Modulated-carrier systems (code shift keying in combination with frequency multiplexing	H04L 5/06
simultaneous bidirectional transmission of ac signals	H04L 5/143
Code Shift Keying; CCK (complementary code keying)	H04L 23/02
Pulse width modulation	H04L 25/4902
Pulse position modulation	H04L 25/4902
Pulse amplitude modulation	H04L 25/4917
Delta modulation	H03M 3/02
Details on optical domain processing	H04B 10/516
Analogue modulations	H04B 14/00
polarisation shift keying	H04B 14/008
transmission of data during the active part of a television frame	H04N 7/025

Informative references

Attention is drawn to the following places, which may be of interest for search:

Trellis-coded modulation	H04L 1/006
Arrangements affording multiple use of the transmission path	H04L 5/00
CORDIC	G06F 7/5446
Modulator circuits in general (analogue modulators)	H03C
Demodulator circuits in general (analogue demodulators)	H03D
Modifications in amplifiers to reduce non-linear distortions, by pre-distortion	H03F 1/3241

Special rules of classification

The scheme under H04L 27/0014 is intended for classifying in more detail the carrier recovery aspects.

For multicarrier signals, the carrier recovery should be classified only in H04L 27/2657, and not in the scheme of H04L 27/0014.

H04L 27/0006: this class is related to spectrum sensing or spectrum pooling techniques to determine unused spectrum which may opportunistically use while avoiding interference with primary users (in case of cognitive radio, for example). The allocation per se of frequency carriers, subcarriers, tones or bands is in H04L 5/00. This class is for How it is assessed that there is "a gap", for example: by energy detection or signal strength level detection and threshold comparison; by match filtering; by detection based on cyclostationarity properties, etc.

H04L 2027/0026: the correction of carrier offset implies correction of frequency offset and/or phase offset.

H04L 27/186: PSK signal shaping, e.g. Trellis shaping, coset coding.

H04L 27/2078: this group covers, for example, π/4-DPSK.

H04L 27/2271, H04L 27/2272, H04L 27/2273, H04L 27/2275, H04L 27/2276, H04L 27/2277: these groups should not be used for classifying (only for searching).

To classify the aspects covered by these groups, the main group H04L 27/227 is given in combination with:

- H04L 2027/003 (instead of H04L 27/2271),
- H04L 2027/0053 (instead of H04L 27/2272),
- H04L 2027/0057 (instead of H04L 27/2273),
- H04L 2027/0028 (instead of H04L 27/2275),
- H04L 2027/0048/ H04L 2027/0051 (instead of H04L 27/2276) or H04L 2027/0061 (instead of H04L 27/2277).

Glossary of terms

In this place, the following terms or expressions are used with the meaning indicated:

ASK	Amplitude Shift Keying
CPM	Continuous Phase Modulation
FSK	Frequency Shift Keying
OOK	On-Off Keying
PSK	Phase Shift Keying

DPSK	Differential Phase Shift Keying
QAM	Quadrature Amplitude Modulation

Synonyms and Keywords

In patent documents the following expression "multiresolution systems" is often used as synonym of non-uniform or asymmetric or layered modulation or hierarchical modulation or superposed modulation.

H04L 27/26

Systems using multi-frequency codes (H04L 27/32 takes precedence)

Definition statement

This place covers:

All techniques related to the multiple carriers processing of electrical signals (at the transmitter and receiver), to the structure of such signals (pilot signals, guard interval), and problems related to the frequency domain processing of such signals (Peak to Average Power Ratio PAPR).

Example of systems covered: OFDM, OFDMA, SC-FDMA, IFDMA, LTE, DVB, DSL, Optical OFDM ...

Practically the coverage of this subgroup in term of features is:

- within a transmitter, it starts at the serial to parallel transformation of the data and ends after the IFFT (or any other frequency domain to time domain converter) or post-PAPR processing, and includes the PAPR processing, the pilot insertion, and if present the DFT precoding of the data (for SC-FDMA systems).
- within a receiver, it starts at the FFT (or any other time domain to frequency domain converter) and includes the synchronisation arrangements (time, frequency).

References

Limiting references

This place does not cover:

Resource allocation techniques	H04L 5/00
Bit loading of the subcarriers for OFDM(A) systems	H04L 5/0046
Pilot allocation for OFDM(A) systems	H04L 5/0048
Techniques like MC-CDMA involving code and frequency multiplexing	H04L 5/026, H04L 5/0021
Channel estimation techniques	H04L 25/0202
Interference cancellation techniques (Inter Carrier Interference, multiusers)	H04L 25/03006
Pulse shaping	H04L 25/03834
Details of Fourier transforms	G06F 17/141
Optical transmitters.	H04B 10/50
Higher Layer (network, routing) techniques	H04W

Special rules of classification

Classification as secondary class for additional information:

When the main invention does not lie within this subgroup but interacts with the OFDM multiplexing in a particular way, a secondary class can be given in one of the main groups (H04L 27/2601, H04L 27/2626 for transmitter related aspects or H04L 27/2647 for receivers related aspects).

However only cases where the choice of OFDM as multiplexing is clearly linked with the invention should be classified there.

This is the first class in the hierarchy mentioning the use of multiple frequencies. However this class is almost never used for classification of multicarrier aspects. Instead the next class H04L 27/2601 is used as top class for multicarrier aspects.

H04L 27/2601

{Multicarrier modulation systems}

Special rules of classification

Although mentioned as modulation, it can of course be interpreted as multiplexing depending on the way the processing is interpreted. In a way it is a modulation since the main carrier signal is mixed with a modulating signal being the output of the IFFT after cyclic prefix addition. However it is also multiplexing since data being either from one user or from multiple users are orthogonally mapped to the subcarriers.

This group is generally given to aspects not covered by any of the following lower subgroups, or to documents where OFDM is a secondary technical aspect.

H04L 27/2602

{Signal structure}

Special rules of classification

The two main aspects under this group are the cyclic prefix classified under H04L 27/2605 and the pilot structure under H04L 27/261.

Basically documents classified here have their main feature in the mapping of particular data to the subcarriers or properties of the resultant OFDM time domain signal after IFFT, rather than particular means for processing the signal.

H04L 27/2604

{Multiresolution systems (by means of multiresolution subcarriers H04L 27/183, H04L 27/3488)}

Definition statement

This place covers:

Different constellations (modulations) used on the subcarrier. For the allocation aspect (i.e. waterfilling for instance), see H04L 5/0044.

References

Limiting references

This place does not cover:

Multiresolution modulation methods	H04L 27/183, H04L 27/3488

H04L 27/2605

{Symbol extensions}

References

Informative references

Attention is drawn to the following places, which may be of interest for search:

Delay profiles	H04L 25/0212, H04B 17/364
Symbol synchronization (locating the FFT window within a useful data portion + guard period)	H04L 27/2665

Special rules of classification

Most of the OFDM systems (except OQAM OFDM) use a cyclic extension added in time domain after each symbol in order to capture all multipath components that would result otherwise in Inter Symbol Interference (H04L 25/03006). Documents classified here either use a particular extension (adaptive or with a specific pattern) or provide for a specific processing of this extension.

Synonyms and Keywords

In patent documents, the following words/expressions are often used as synonyms:

- "Symbol Extension", "Cyclic Prefix/Postfix/Suffix/Extension" and "Guard Period/Interval"

H04L 27/2607

{Cyclic extensions}

Special rules of classification

The Guard Period is a repetition of a portion of the useful data segment of the symbol transmitted.

H04L 27/2608

{Allocation of payload}

Special rules of classification

This class although still officially present is no longer active and documents dealing with allocation of subcarriers or allocation of bits to the subcarriers are now classified under H04L 5/003.

H04L 27/261

{Details of reference signals (H04L 27/262 takes precedence)}

References

Limiting references

This place does not cover:

Reduction thereof by selection of pilot symbols	H04L 27/262

Special rules of classification

Since the allocation of pilot tones has now been moved to H04L 5/0048, only the subgroup H04L 27/2613 remains active.

H04L 27/2611

{Distribution thereof}

Special rules of classification

Allocation of pilot tones is now classified under H04L 5/0048

H04L 27/2613

{Structure of the reference signals per se}

Definition statement

This place covers:

Properties of the reference sequences used as preamble or pilot sequence.

References

Informative references

Attention is drawn to the following places, which may be of interest for search:

Linked to code properties	H04J 13/00
CAZAC sequences	H04J 13/0055

H04L 27/2614

{Peak power aspects}

Special rules of classification

The Inverse Fourier transform at the transmitter transforms modulated symbols on each subcarrier, modulated by usual constellation patterns (QPSK, QAM), to time domain symbols presenting high peak to average power ratio. This problem is a recurrent problem in OFDM systems.

This high PAPR creates linearity problems at the following power amplifiers and must be remedied for in the time domain (i.e. after the IFFT, for instance by clipping) or in the frequency domain (i.e. before the IFFT) using iteration and feedback loop (using empty subcarrier, constellation extension ...).

When none of the following subclasses matches the technique used in the document, this class H04L 27/2614 has to be given.

Synonyms and Keywords

In patent documents, the following words/expressions are often used as synonyms:

- "peak to average power ratio", "PAPR " and "Crest factor"

H04L 27/2615

{Reduction thereof using coding}

Special rules of classification

Through coding the series of bits before the modulation and the serial to parallel transformation, the situation where all modulated symbols on each subcarrier have the same phase thus generating the highest power is avoided. (See Jones and Wilkinson: "Block coding scheme for reduction of peak-to-average envelope power ratio of multicarrier transmission systems", 1994).

H04L 27/2618

{Reduction thereof using auxiliary subcarriers}

Definition statement

This place covers:

For instance: Tone Injection or Tone Reservation. A subset of subcarriers is used for generating a PAPR reduction signal c added to the remaining signal transmitted.

H04L 27/262

{Reduction thereof by selection of pilot symbols}

Definition statement

This place covers:

Selection between multiple possible training sequences.

H04L 27/2621

{Reduction thereof using phase offsets between subcarriers}

Definition statement

This place covers:

One of the most active subfields of PAPR reduction: Encompasses techniques like Selective Mapping (SLM) or Partial Transmission Sequence (PTS). Considering N subcarriers, SLM performs M multiple parallel N point IFFTs, each using a different N-phase vector (one phase value applied to each subcarrier) and selects out of the M outputs the resulting time domain OFDM with the lowest PAPR value. PTS divides the N subcarriers in V disjoint subcarriers subsets, multiplies each by a phase

value and performs V partial IFFT before adding the resulting V outputs producing the OFDM symbol to be sent.

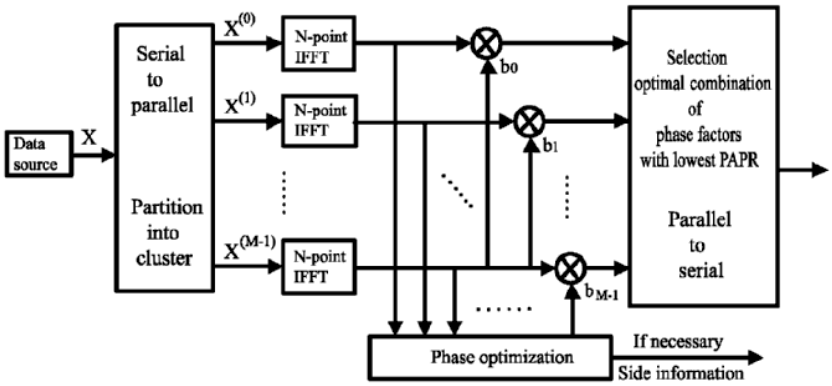

Fig. 2. Block diagram of PTS technique.

From Tao Jiang & al. "An Overview: Peak-to-Average Power Ratio Reduction Techniques for OFDM Signals"

H04L 27/2623

{Reduction thereof by clipping}

Definition statement

This place covers:

Large field: Can happen in time domain (usual understanding where the parts outside the allowed power region are filtered or clipped out) but also in frequency domain (modulated symbols on each subcarrier are moved, see Active Constellation Extension). Can consist in decreasing higher power samples (by filtering or clipping) or enhancing low power samples (see nonlinear companding transforms using for instance µ-law companding from speech processing). Modify the dynamics of the signal.

References

Informative references

Attention is drawn to the following places, which may be of interest for search:

Clipping in the frequency domain of the modulated symbols	H04L 27/3411

H04L 27/2624

{by soft clipping}

Definition statement

This place covers:

Based on Quantization aspects (linked to digital to analog conversion as well), see for instance the nonlinear companding method.

H04L 27/2626

{Arrangements specific to the transmitter}

Definition statement

This place covers:

As depicted below, the features covered under this class extend from the serial to parallel conversion to the Guard Interval insertion and/or PAPR reduction block.

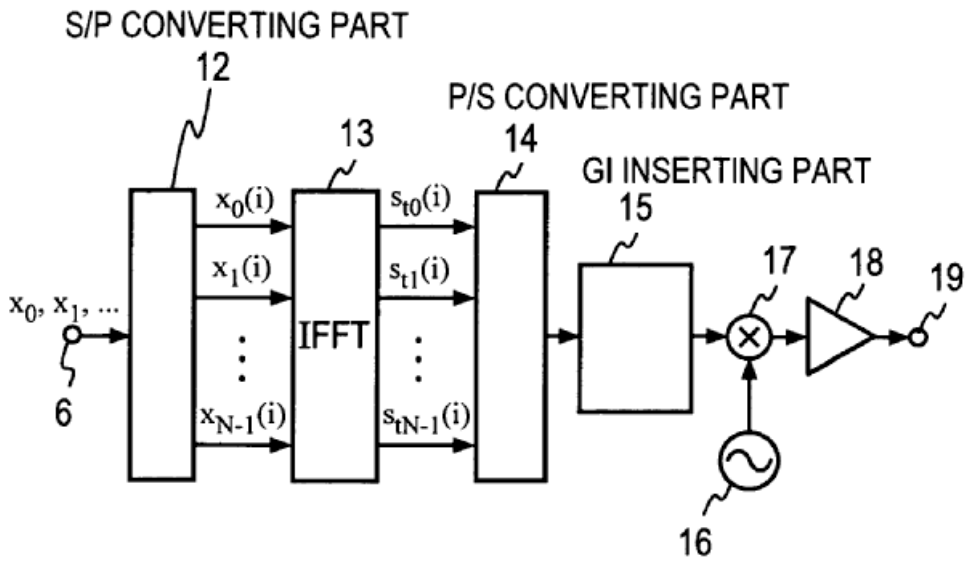

From US2007153673

H04L 27/2627

{Modulators}

Definition statement

This place covers:

This part concerns the frequency domain to time domain conversion using either the classical Fourier transform, the filter bank approach or direct modulation of individual subcarriers.

H04L 27/2628

{Inverse Fourier transform modulators, e.g. IFFT/IDFT (DFT or FFT computation methods or devices in general G06F 17/141)}

References

Limiting references

This place does not cover:

General DFT and FFT computation methods and devices	G06F 17/141

H04L 27/263

{modification of IFFT/IDFT modulator for performance improvement}

References

Limiting references

This place does not cover:

This class does not deal with the details of the IFFT/IDFT which are found under G06F 17/141, but rather with the parameterisation, configuration of the IFFT/IDFT or unobvious interaction between the IDFT and other circuits.

H04L 27/2631

{with polyphase implementation}

Definition statement

This place covers:

Filter bank applications.

Synonyms and Keywords

In patent documents, the following abbreviations are often used:

FMT	Filtered Multitone

H04L 27/2633

{using partial FFTs}

Definition statement

This place covers:

Less subcarriers processed than the actual number of subcarriers to be transmitted.

H04L 27/2634

{IFFT/IDFT in combination with other circuits for modulation (DFT or FFT computation methods or devices in general G06F 17/141)}

References

Limiting references

This place does not cover:

DFT or FFT computation methods or devices in general	G06F 17/141

Informative references

Attention is drawn to the following places, which may be of interest for search:

Modulation circuits in general (Amplitude modulation)	H04L 27/02
Frequency modulation	H04L 27/10
Phase modulation	H04L 27/18

Combined modulation, like QAM	H04L 27/32

H04L 27/2636

{with FFT/DFT, e.g. standard SC-FDMA transmitter or DFT-SOFDM}

Definition statement

This place covers:

A DFT precoding of the symbols to be transmitted is performed prior to the IDFT. This gives good PAPR properties to the resulting signal.

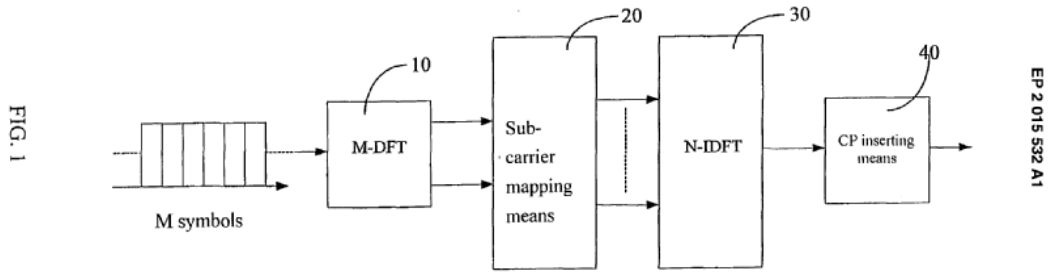

Conventional SC-FDMA Transmitter

H04L 27/2637

{with direct modulation of individual subcarriers}

Definition statement

This place covers:

The frequency domain to time domain conversion is not performed using any inverse Fourier transform.

H04L 27/2639

{Discrete cosine transform modulators}

References

Informative references

Attention is drawn to the following places, which may be of interest for search:

Details on Discrete Cosine Transform	G06F 17/147

H04L 27/264

{Filterbank multicarrier [FBMC]}

References

Limiting references

This place does not cover:

Loss of orthogonality between the carriers due to the use of synthesis and analysis filter banks instead of the rectangular pulse of OFDM. Advantages: More freedom for the choice of pulses which can be more confined in time and frequency. No guard interval needed. Often combined with the use of higher density of basis functions (twice if only orthogonality in real domain should be ensured) like OQAM scheme.

H04L 27/2642

{Wavelet transform modulators (wavelets in general H04L 27/0004; wavelet-division H04L 5/0008)}

Definition statement

This place covers:

Discrete Wavelet Multitone, Wavelet based multicarrier ...

References

Limiting references

This place does not cover:

Using Wavelet for dividing the transmission path	H04L 5/0008
Wavelet transforms per se	H04L 27/0004

H04L 27/2643

{using symbol repetition, e.g. time domain realization of distributed FDMA}

Definition statement

This place covers:

For the uplink of some standards.

H04L 27/2644

{with oversampling}

Definition statement

This place covers:

More than one sample per subcarrier. Oversampling OFDM.

References

Informative references

Attention is drawn to the following places, which may be of interest for search:

Filtered Multitone	H04L 27/264

H04L 27/2646

{using feedback from receiver for adjusting OFDM transmission parameters, e.g. transmission timing or guard interval length}

References

Limiting references

This place does not cover:

Timing Advance	H04W 56/0005, H04W 56/0045

H04L 27/2647

{Arrangements specific to the receiver (equalisation H04L 25/03006, H04L 27/01)}

Definition statement

This place covers:

This is the mirror part to H04L 27/2626.

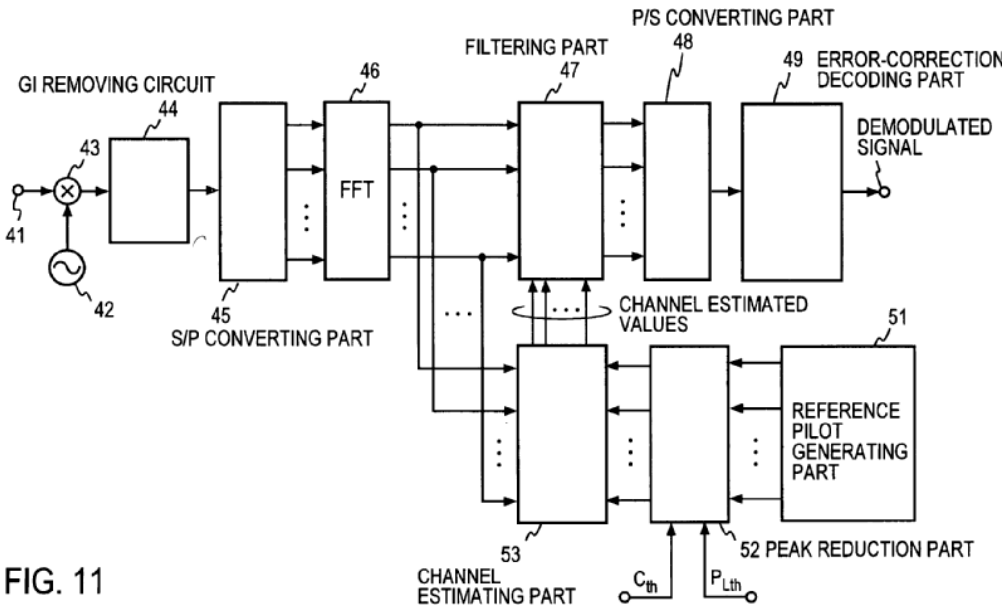

FIG. 11

From US2007153673

References

Limiting references

This place does not cover:

Equalisation	H04L 25/03006, H04L 27/01

H04L 27/2655

{Synchronisation arrangements}

Definition statement

This place covers:

The synchronisation of multicarrier signals received implies a three-step synchronisation: a symbol synchronisation, a frequency synchronisation and a frame synchronisation.

Reference Article: "Robust Frequency and Timing Synchronization for OFDM"; Timothy M. Schmidl and Donald C. Cox, Fellow, 1997, IEEE

Also linked to Primary Synchronisation Signal (PSCH) and Secondary Synchronisation Signal (SSCH) in LTE.

Relationships with other classification places

Determination of the cell ID (cell search)	H04J 11/0069
Carrier Synchronisation not specific to multicarrier systems	H04L 27/0014
Synchronisation at the physical level not specific to multicarrier systems	H04L 7/00
Synchronisation protocols at higher layers	H04W 56/00

H04L 27/2656

{Frame synchronisation}

Definition statement

This place covers:

Frame synchronisation is generally achieved by time domain correlation using a repetition preamble. Technique is similar as that for achieving symbol synchronisation.

References

Informative references

Attention is drawn to the following places, which may be of interest for search:

Preamble design	H04L 27/2613
Symbol synchronisation	H04L 27/2662

H04L 27/2657

{Carrier synchronisation}

Definition statement

This place covers:

Carrier Synchronisation in OFDM systems often consists in a first round for identifying an offset corresponding to an integer number of subcarrier spacings (coarse synchronisation), and a second round identifying the fractional subcarrier spacing offset (i.e. less than a subcarrier spacing).

Special rules of classification

In H04L 27/2657, only the cases not decomposing the synchronisation in these coarse and fine steps should be classified. Otherwise the subgroups H04L 27/2659 and H04L 27/266 should be used.

Synonyms and Keywords

In patent documents the following expressions "frequency offset", "frequency shift", "frequency drift", "frequency error", "frequency correction", "carrier recovery" are often used in relation with this subgroup.

H04L 27/2659

{Coarse or integer frequency offset determination and synchronisation}

Definition statement

This place covers:

An integer subcarrier spacing frequency offset causes at the receiver a shift of the subcarriers in the frequency domain.

Coarse frequency offset determination is often performed in the frequency domain: It consists in identifying the amount of subcarrier shifts by correlating the received signal after FFT with a reference signal.

H04L 27/266

{Fine or fractional frequency offset determination and synchronisation}

Definition statement

This place covers:

A fractional subcarrier spacing offset causes at the receiver an attenuation of each subcarrier symbol in the frequency domain.

Usually this fractional offset is identified by autocorrelating the received preamble in the time domain.

H04L 27/2662

{Symbol synchronisation}

Definition statement

This place covers:

The same distinction between coarse and fine synchronisation as for the frequency synchronisation applies.

The symbol boundaries replace the carrier spacing: While the coarse symbol synchronisation will align the received symbol stream with a reference time, the fine symbol synchronisation mainly consists of synchronisation within the symbol boundaries (i.e. including the Guard Interval) and the best positioning of the FFT window within these boundaries.

Special rules of classification

As for frequency synchronisation, this class H04L 27/2662 should only be allocated to cases not decomposing the synchronisation in these coarse and fine steps. Otherwise the subgroups H04L 27/2663 and H04L 27/2665 should be used.

H04L 27/2663

{Coarse synchronisation, e.g. by correlation}

Definition statement

This place covers:

Generally coarse symbol synchronisation is achieved by autocorrelation in the time domain of the preamble sequence.

H04L 27/2665

{Fine synchronisation, e.g. by positioning the FFT window}

Definition statement

This place covers:

A FFT window of length corresponding to the useful symbol part must be positioned within the wider part including the Guard Interval. The ideal FFT location minimizes Inter Symbol Interference (ISI) and ensures the highest desired signal energy captured.

H04L 27/2666

{Acquisition of further OFDM parameters, e.g. bandwidth, subcarrier spacing, or guard interval length}

Definition statement

This place covers:

In some systems using OFDM, transmission parameters like the Guard Interval length, the carrier spacing and/or bandwidth are variable or unknown to the receiver and thus have to be determined at the receiver (without any control channel). This class covers the different algorithms and methods to determine these parameters at the receiver.

References

Limiting references

This place does not cover:

Allocation of subcarriers	H04L 5/003, H04W 72/04

H04L 27/2668

{Details of algorithms}

Definition statement

This place covers:

This class has been foreseen as a complementary class to the synchronisation classes above. It aims at further describing the synchronisation algorithm performed. Multiple classes may be allocated to describe the algorithm as precisely as possible.

H04L 27/2669

{characterised by the domain of operation}

Definition statement

This place covers:

This first subclass concerns the domain (time or frequency) in which the algorithm takes place.
For mixed domain (files where parts of the algorithm takes place in time domain and other parts in frequency domain), this class H04L 27/2669 should be allocated.

H04L 27/2671

{Time domain}

Definition statement

This place covers:

The main algorithm of the invention has its essential steps performed in time domain.

H04L 27/2672

{Frequency domain}

Definition statement

This place covers:

The main algorithm of the invention has its essential steps performed in frequency domain.

H04L 27/2673

{characterised by synchronisation parameters}

Definition statement

This place covers:

This subclass should be allocated to describe which part of the received signal is used for achieving synchronisation: This can be known symbols (a preamble or pilot symbols), or it can be blind by using only unknown symbols (the decision of these symbols or their cyclic extension, or the presence of a repetition pattern).

H04L 27/2675

{Pilot or known symbols (structure of pilot symbols H04L 27/2613; cell search in orthogonal multiplex systems H04J 11/0069; allocation of pilot signals H04L 5/0048)}

References

Limiting references

This place does not cover:

Allocation of pilot signals	H04L 5/0048
Cell search in orthogonal multiplex systems	H04J 11/0069

Informative references

Attention is drawn to the following places, which may be of interest for search:

Structure of pilot symbols	H04L 27/2613

Special rules of classification

Classification here should take place when the synchronisation algorithm of the document uses known symbols and their location at the receiver to achieve synchronisation. The value of these symbols is known.

H04L 27/2676

{Blind, i.e. without using known symbols}

Definition statement

This place covers:

In this case, the algorithm does not use any known symbols (the value of these symbols and their location is not known in advance).

H04L 27/2678

{using cyclostationarities, e.g. cyclic prefix or postfix}

Definition statement

This place covers:

The Guard Interval structure (when the Guard Interval consists of a cyclic repetition of the useful symbol part, see H04L 27/2607) or any other cyclostationarity of the received signal is used for achieving synchronisation.

The use of a repetition pattern (where instead of a preamble, a data symbol is sent twice, and the receiver uses only the location and the fact that repetition occurred) is considered as being blind and belongs to this class since it uses a kind of cyclostationarity in the received signal.

H04L 27/2679

{Decision-aided}

Definition statement

This place covers:

The algorithm has a feedback loop where decision on received symbols are used to achieve synchronisation.

H04L 27/2681

{characterised by constraints}

Definition statement

This place covers:

The constraints given to the algorithm or in other words, the advantage of the algorithm versus conventional algorithms.

H04L 27/2682

{Precision}

Definition statement

This place covers:

The algorithm of the document achieves a better precision (in time or frequency) than conventional algorithms.

H04L 27/2684

{Complexity}

Definition statement

This place covers:

The algorithm of the document has a lesser complexity than conventional algorithms.

H04L 27/2685

{Speed of convergence}

Definition statement

This place covers:

The algorithm of the document reaches synchronisation more quickly than conventional algorithms.

H04L 27/2686

{Range of frequencies or delays tested}

Definition statement

This place covers:

The algorithm of the document has a wider range of frequencies or delays tested than conventional algorithms.

H04L 27/2688

{Resistance to perturbation, e.g. noise, interference or fading}

Definition statement

This place covers:

The algorithm of the document is more resistant to such perturbations or errors than conventional algorithms.

H04L 27/2689

{Link with other circuits, i.e. special connections between synchronisation arrangements and other circuits for achieving synchronisation}

Definition statement

This place covers:

This particular subgroup applies when a synergistic effect is present between the synchronisation arrangement and any other circuit in the course of the synchronisation process (example: Locating the FFT window is often associated with particular peak tracking arrangements for channel estimation).

H04L 27/2691

{involving interference determination or cancellation (interference mitigation or coordination in orthogonal multiplex systems in general H04J 11/0023)}

Definition statement

This place covers:

For the cases where the synchronisation process interacts non-obviously with an interference estimation/cancellation circuit.

Interference aspects are covered in many other classes:

Relationships with other classification places

Interference in receivers	H04B 1/10
Further interference aspects at the receiver (EMI)	H04B 15/00
Interference due to the multiplexing of users (inter-users, inter-cell, adjacent channel)	H04J 11/0023
Inter Symbol Interference removed in Equalizers	H04L 25/03006

H04L 27/2692

{with preamble design, i.e. with negotiation of the synchronisation sequence with transmitter or sequence linked to the algorithm used at the receiver}

Definition statement

This place covers:

The preamble sent by transmitter is constructed or negotiated in the light of the synchronisation process/algorithm used at the receiver.

H04L 27/2695

{with channel estimation, e.g. determination of delay spread, derivative or peak tracking (channel estimation per se H04L 25/0202)}

Definition statement

This place covers:

As mentioned in the example above, the synchronisation process may interact with a particular channel estimation/tracking method.

References

Limiting references

This place does not cover:

Channel estimation per se	H04L 25/0202
Measuring or estimating channel quality parameters	H04B 17/309

H04L 27/2697

{in combination with other modulation techniques}

Definition statement

This place covers:

This subclass like H04L 27/2634 above covers interaction between the OFDM multiplexing and other circuit components.

H04L 27/2698

{double density OFDM/OQAM system, e.g. OFDM/OQAM-IOTA system}

Definition statement

This place covers:

OFDM/OQAM generally has a real value modulated on each subcarrier and does not necessitate any Guard Interval to be inserted between contiguous symbols. It generally necessitates well localized (in time as well as in frequency domain) pulse shaping function.

References

Limiting references

This place does not cover:

Pulse shaping	H04L 25/03834

Special rules of classification

- H04L 27/3416: QAM signal shaping, e.g. Trellis shaping, coset coding.
- H04L 27/3827, H04L 27/3836: these groups should not be used for classifying (only for searching). To classify the aspects covered by these groups, the main group H04L 27/3818 is given in combination with: H04L 2027/003 (instead of H04L 27/3827), H04L 2027/0028 or H04L 2027/0048 or H04L 2027/0087 (instead of H04L 27/3836).

- H04L 27/3863: I/Q imbalance compensation at the receiver for QAM signals. The I/Q imbalance at the transmitter for QAM is classified in H04L 27/364. In general, i.e. when it is not a QAM signal, the classification is under H04L 2027/0016.

H04L 29/00

Arrangements, apparatus, circuits or systems, not covered by a single one of groups H04L 1/00 - H04L 27/00 (interconnection of, or transfer of information or other signals between, memories, input/output devices or central processing units G06F 13/00){contains provisionally no documents}

References

Limiting references

This place does not cover:

interconnection of, or transfer of information or other signals between, memories, input/output devices or central processing units	G06F 13/00

H04L 41/00

{Arrangements for maintenance or administration or management of packet switching networks}

Definition statement

This place covers:

Aspects relating to operation, administration, maintenance, and provisioning (OAMP) of heterogeneous data packet networks (e.g. IP, Ethernet, Next Generation Network ...) both using proprietary and standardised network management architectures and protocols (e.g. TMN, SNMP, OMA-DM) irrespective of the physical transport medium, the type of service carried and the type of virtualisation (e.g. cloud);

Although typical Network Management functions, aspects related to accounting/billing and security are in general not classified here. The only exceptions are Service quality based billing and security of the network management system (e.g. authorised access to the manager, security of management messages).

Relationships with other classification places

Aspects related to the management of the fulfilment of an agreement between two different parties (usually not within the same network/domain), typically known as Service Level Agreement (SLA), are classified under the H04L 41/50 subgroups.

aspects related to the monitoring of the performance of a network communications are classified under the H04L 43/00 subgroups (e.g. monitoring of QoS parameters).

Aspects related to the testing of a network or a network element are classified under H04L 43/50.

Aspects relating to specific functions of data storage and retrieval, e.g. in database, is covered under G06F 17/30

References

Limiting references

This place does not cover:

Detection or prevention of error at physical layer	H04L 1/00
Accounting or billing for the transport of the data-packets	H04L 12/14
Operation and Maintenance of homogeneous ATM networks	H04L 2012/5625
Arrangement for network security	H04L 63/00
Controlling or operating of remote end-user devices' applications	H04L 67/125
Network management of traditional telephonic (circuit-switched) networks	H04M 3/22

Informative references

Attention is drawn to the following places, which may be of interest for search:

Interconnection arrangements between voice switching centres. Network operation, administration, maintenance or provisioning	H04M 7/0081
Arrangements providing connection between exchanges	H04Q 3/0016
Selecting arrangements for multiplex systems using optical techniques	H04Q 11/0001
Wireless communication networks. Supervisory, monitoring or testing arrangements	H04W 24/00
Wireless communication networks. Network traffic or resource management	H04W 28/00

Special rules of classification

In these subgroups, unless otherwise indicated, classification is made according to the best place which embraces the invention. When several particular technical subjects are disclosed, this rule is separately applied to each of them.

Glossary of terms

In this place, the following terms or expressions are used with the meaning indicated:

Network Management, NM	refers to the activities, methods, procedures, and tools that pertain to the operation, administration, maintenance, and provisioning of networked systems.
Network Management functions	Functions that are performed as part of network management include Fault, Configuration, Accounting, Performance Security management (FCAPS).
Operation	deals with keeping the network up and running smoothly.
Administration	deals with keeping track of resources in the network and how they are assigned. It includes all the "housekeeping" that is necessary to keep the network under control.
Maintenance	is concerned with performing repairs and upgrades—for example, when equipment must be replaced, when a router needs a patch for an operating system image, when a new switch is added to a network. Maintenance also involves corrective and preventive measures to make the managed network run "better", such as adjusting device configuration parameters.

Provisioning	is concerned with configuring resources in the network to support a given service. For example, this might include setting up the network so that a new customer can receive the requested service.
Network Manager	An entity that acts in a manager role for performing the network management functions.
Agent	A software module that performs management functions requested by a Manager.
Network element (NE), managed device, managed node	Manageable logical entity uniting one or more physical devices which are networked. Network elements usually have management agents responsible for interfacing with the network manager. They can be any type of device, including, but not limited to: nodes, routers, switches, bridges, hubs, Network Interface Controller (NIC) hosts, gateways, servers, modem, IP telephones, IP video cameras, data-centres, computer hosts, and printers.
Managed object	an abstract representation of network resources of the network element that is managed.

Synonyms and Keywords

OA&M, OAM	Operation, administration and management
OAM&O, OAMP	Operation, administration, management and provisioninig
OSS	Operations support systems
NM	Network Management
NMS	Network Management System
TMN	Telecommunications Management Network
SNMP	Simple Network Management Protocol
MIB	Management Information Base
TR-069	Technical Report 69 (Broadband forum standard)
ITU	International Telecommunication Union
IETF	Internet Engineering Task Force
OMA-DM	Open Mobile Alliance - Device Management
3GPP	3rd Generation Partnership Project
SOAP	Simple Object Access Protocol

In patent documents the word "management" is often used with the meaning of "controlling", "commanding" , "operating".

In patent documents the expression "configured to" is often used with the meaning "adapted to", "suitable for" defining functional features of structural elements.

H04L 41/02

{involving integration or standardization}

Definition statement

This place covers:

Use of standards NM protocols, standards architecture, arrangement and representation instrumental for a integrated management

Special rules of classification

This group covers a hierarchy of different miscellaneous aspects focusing on integration and standardisation. Classification is preferably made in the appropriate subdivision below.

H04L 41/0206

{using standardized network management architectures, e.g. telecommunication management network [TMN] or unified network management architecture [UNMA]}

Definition statement

This place covers:

Aspects related to the specific type of standards NM architecture used.

Special rules of classification

If the type of standardized architecture is merely cited as general information the group is not to be allocated.

H04L 41/0213

{using standardized network management protocols, e.g. simple network management protocol [SNMP] or common management interface protocol [CMIP]}

Definition statement

This place covers:

Aspects related to modification or specific use of standards NM protocols. Additional examples are TR-069, OMA-DM.

Special rules of classification

If the type of standardized protocol is merely cited as general information the group is not to be allocated. Not conventional management protocol, like web-based, web service are classified under H04L 41/0246.

H04L 41/022

{Multivendor or multistandard integration}

Definition statement

This place covers:

Managing network equipments from different vendors following different communication protocols and standards technologies;

Integration products capable of communicating with different managed nodes in their own protocol and capable of representing a unified network view to the network managers.

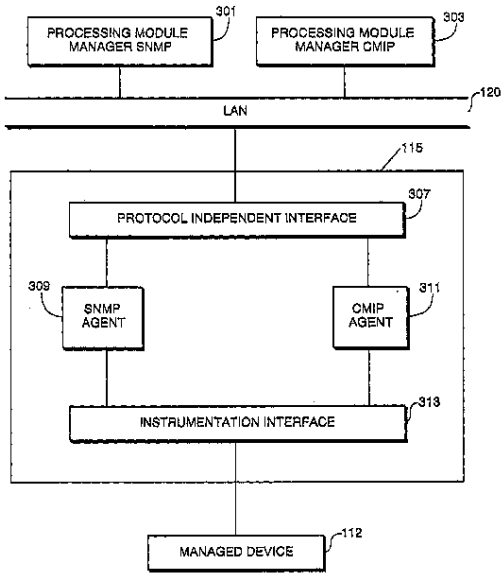

FIG. 3

Examples: EP1162784, US2006168117

H04L 41/0226

{Mapping or translation of multiple network management protocols}

Definition statement

This place covers:

Using different NM protocols, conversion of NM commands and reports from one NM protocol (e.g. CMIP) into another protocol (e.g. SNMP), mapping between different version of the same NM protocols (SNMP v2 and v3);

FIG. 1C

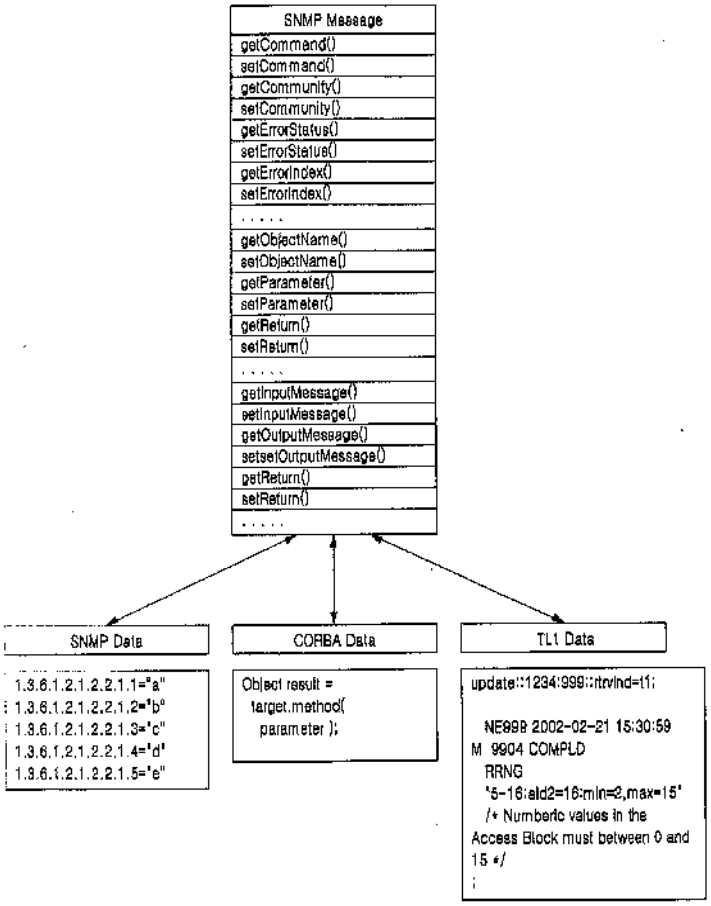

Examples: EP1720286

H04L 41/0233

{using object oriented techniques, e.g. common object request broker architecture [CORBA] for representation of network management data}

Definition statement

This place covers:

Using object oriented techniques (e.g. CORBA) for representation of NM data. Processing managed entities as Objects.

Special rules of classification

This class is to be allocated for OO-Techniques other than or beyond the typical use of objects in, e.g., SNMP (e.g. MIB´s objects or OMA) which can be considered in the class H04L 41/0213 .

H04L 41/024

{using relational databases for representation of network management data, e.g. managing via structured query language [SQL] (information retrieval in structured data stores G06F 17/30286)}

Definition statement

This place covers:

Use of networks being modelled by a (1:1) image in a relational database, e.g, management is done by issuing respective (SQL) commands.

References

Informative references

Attention is drawn to the following places, which may be of interest for search:

Information retrieval in structured data stores	G06F 17/30286

H04L 41/0246

{exchanging or transporting network management information using Internet, e.g. aspects relating to embedding network management web servers in network elements, web service for network management purposes, aspects related to Internet applications or services or web-based protocols, simple object access protocol [SOAP] (web-based network application protocols H04L 67/02; web-based network application protocols for remote control of end-devices or monitoring of remote application data H04L 67/025; proprietary application protocols for remote control of end-devices in special networking environments H04L 67/125; retrieval from the Internet G06F 17/30861)}

Relationships with other classification places

This class relates to aspects where the Internet or web applications and protocols are used for management, and it does not for conventional management protocol, like SNMP.

Aspects of Internet or web applications and protocols in general which are not instrumental to network management functions should be classified in H04L 67/00, in particular H04L 67/02.

The specific management functions should also be classified in the other appropriate H04L 41/00 subgroups, e.g. configuration in H04L 41/08, fault management in H04L 41/06.

References

Limiting references

This place does not cover:

Conversion of network management protocols	H04L 41/0226
Web-based network application protocols in general	H04L 67/02

Web-based network application protocols for remote control of end-devices or monitoring of remote application data	H04L 67/025
Proprietary application protocols for remote control of end-devices in special networking environments	H04L 67/125
Retrieval from the Internet	G06F 17/30861

H04L 41/0253

{involving a browser or web-pages for accessing management information (graphical user interface for network management H04L 41/22)}

Definition statement

This place covers:

Aspects relating to accessing the management information by browsing web pages focusing on the communication capabilities.

Examples: EP1628221, US2007094380

References

Limiting references

This place does not cover:

Generic visualisation aspects of Graphical User Interface (GUI) for management	H04L 41/22

H04L 41/026

{involving e-messaging for transporting management information, e.g. email, instant messaging or chat}

Definition statement

This place covers:

Aspects relating to embedding management objects or management commands or management data by using applications like email, chat.

Examples: US2010220350

H04L 41/0266

{involving management internet meta-data, objects or commands, e.g. by using mark-up language}

Definition statement

This place covers:

Aspects relating to use of Internet language data, e.g. html, xml, for formatting management information, e.g. web services data.

Examples: EP2110991, EP2139161, EP2110991

H04L 41/0273

{involving the use of web services for network management, e.g. SOAP}

Definition statement

This place covers:

Aspects relating to use of SOAP, or other protocols for enveloping/encapsulation of management data.

Examples: EP1715620, US7849472, WO2007084369

H04L 41/028

{for synchronization between service call and response}

Definition statement

This place covers:

Aspects relating to timing between the client and server communication (request, response) for monitoring or exchanging management data.

aspects related to push or pull or polling or event-based transmission of management data.

Examples: US2008189350, US2008184234

H04L 41/0286

{for search or classification or discovery of web services providing management functionalities (network applications and protocols for service discovery H04L 67/16)}

Definition statement

This place covers:

Finding a list of available services, e.g. by using UDDI;

aspects related to how the service is to be accessed, e.g. by using WSDL

Examples: EP2098012, US2010318370

References

Limiting references

This place does not cover:

Network applications and protocols for service discovery	H04L 67/16

H04L 41/0293

{for accessing web services by means of a binding identification of the management service or element (aspects of naming and addressing in general H04L 61/00)}

Definition statement

This place covers:

Aspects relating to address resolver (e.g. URL) or path identification for accessing web resources.

Aspects related to physical or logical identification of management client/server.

Examples: US2009177768, EP1898556

Relationships with other classification places

Aspects of naming and addressing in general is covered by H04L 61/00

H04L 41/04

{Architectural aspects of network management arrangements}

Definition statement

This place covers:

Aspects on how the NMS is structurally organised;

Aspects on how the NMS is connected for retrieving the management information.

References

Informative references

Attention is drawn to the following places, which may be of interest for search:

Architecture of monitoring probes	H04L 43/12

H04L 41/042

{Arrangements involving multiple distributed management centers cooperatively managing the network}

Definition statement

This place covers:

Multiple NM centers or NM units communicating with each other and managing the network together and all managers being on the same hierarchical level - peer to peer relation.

Synchronisation and coordination among different managers.

Examples: EP1624615, EP2053780

Special rules of classification

The different multivendor network managers under the group H04L 41/022 do not necessarily cooperate with each other but they operate independently.

H04L 41/044

{Arrangements involving a hierarchical management structure}

Definition statement

This place covers:

Hierarchical structures like main manager > medium (mid - level -) managers > sub-managers.

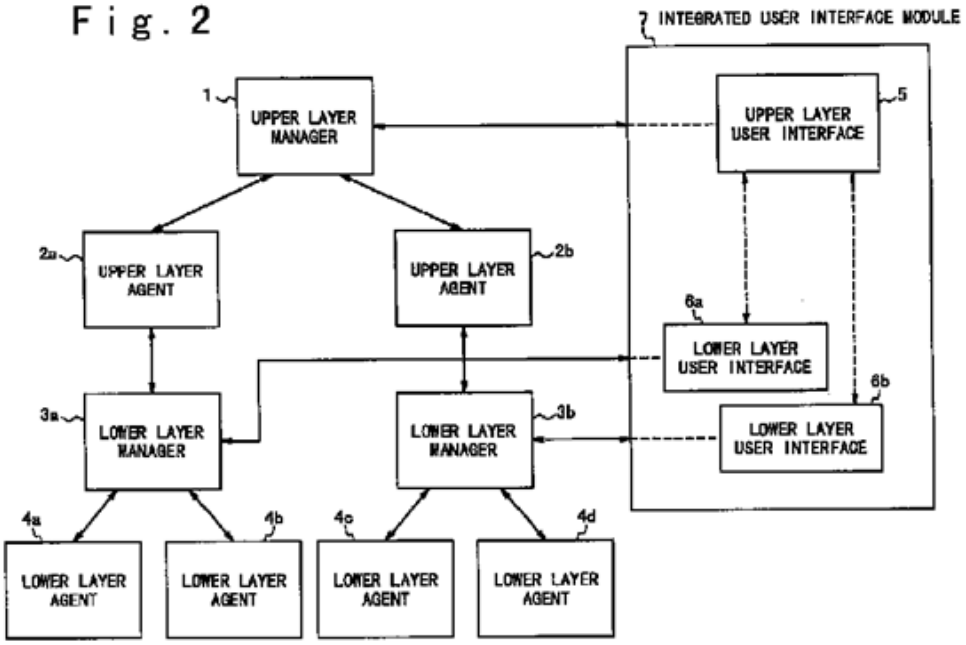

Examples: EP0838919, US2002174207

H04L 41/046

{Aspects of network management agents}

Definition statement

This place covers:

Usage of NM agents. Management agents are usually implemented in the managed network nodes themselves or reside "close" to the managed nodes in the network. They usually support the standard

NM protocols or provide a mapping functionality between the nodes' proprietary and the managers standardized protocol (e.g. proxy).

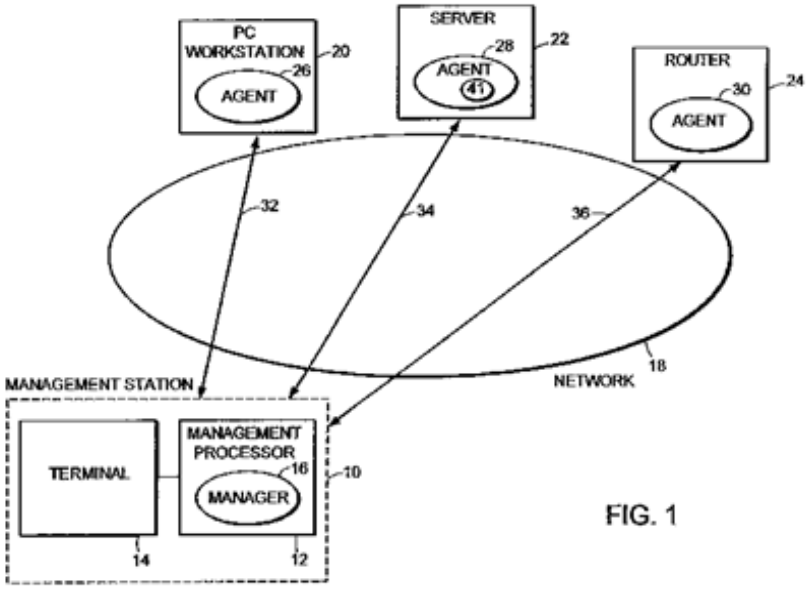

FIG. 1

Examples: EP0831617

Special rules of classification

This class is to be allocated for use and features of Agents other than or beyond the typical use already done in, e.g., SNMP standardised protocols, which can be considered in the class H04L 41/0213.

H04L 41/048

{mobile agents}

Definition statement

This place covers:

Agent which are able to move from one place to another, e.g. from a NMS to a managed element.

H04L 41/06

{involving management of faults or events or alarms}

Definition statement

This place covers:

Aspects related to the generation, processing of notifications, error messages, managements messages originated from the network instrumental to determine the network behaviour.

Relationships with other classification places

Aspects related to active monitoring of the status or availability of the network elements which are triggered by a NMS or a monitoring system are classified under the H04L 43/00 subgroups.

Fault tolerance in computer systems is classified under G06F 11/00. In general, if restoration of faults is performed without a NMS but rather with the involvement of the end nodes (CPUs in multiprocessor systems, Personal Computers in computer networks, or Operating System or applications running on the end nodes) then classification should be done in the G06F 11/00 groups, as indicated below:

Responding to the occurrence of a fault, e.g. fault tolerance	G06F 11/07
Error or fault processing without redundancy, i.e. by taking additional measures to deal with the error/fault	G06F 11/0703
Error detection or correction of the data by redundancy in operation	G06F 11/14
Error detection or correction of the data by redundancy in hardware	G06F 11/16

References

Limiting references

This place does not cover:

alarm or failure messages notified by the user, customer (trouble ticket)	H04L 41/5074
alarm or messages triggered by the user, handling of user's trouble tickets	H04L 41/5074
Active monitoring the status or the connection of network elements	H04L 43/10, H04L 43/0811, H04L 43/0817
tracking events generated by the networked application user's	H04L 67/22
events generated by Applications or software which are not affecting the network behaviour	
Business-related events	

Informative references

Attention is drawn to the following places, which may be of interest for search:

Fault management in exchanges' connections	H04Q 3/0075

Glossary of terms

In this place, the following terms or expressions are used with the meaning indicated:

Error	A deviation of a system from normal operation.
Fault or failure	Lasting error or warning condition.
Event	Something that happens which may be of interest. A fault, a change in status, crossing a threshold, or an external input to the system, for example.
Notification	Unsolicited transmission of management information from network managed entity to network manager.
Trap	Asynchronous notification from managed device (or agent thereof) to NMS

Alarm or alert	Indication of the occurrence of a fault.
faulty entity	a network element or a sub-part thereof in charge of communication functionalities, e.g. NIC.

H04L 41/0604

{Alarm or event filtering, e.g. for reduction of information}

Definition statement

This place covers:

Reduction of the notifications' number. Often the network manager is overwhelmed with floods of alarms in complex networks. Filters can be set to only show these events the network managers considers "relevant" at a given time representing a subset.

Aspects related to classification, suppression, grouping of notifications

References

Limiting references

This place does not cover:

Filtering or reduction of monitored data packets	H04L 43/02

Informative references

Attention is drawn to the following places, which may be of interest for search:

Error or fault reporting or logging, in computer systems	G06F 11/0766

H04L 41/0609

{based on severity or priority}

Definition statement

This place covers:

Aspects relating to discriminate among messages which are less or more relevant or urgent.

H04L 41/0613

{based on the type or category of the network elements}

Definition statement

This place covers:

Aspects relating to discriminate among messages which are originated by different kind of devices (e.g. routers instead of switches).

H04L 41/0618

{based on the physical or logical position}

Definition statement

This place covers:

Filtering/reducing based on topological/geographical information of the network elements.

H04L 41/0622

{based on time}

Definition statement

This place covers:

Filtering/reducing depending on the time the messages were generated.

H04L 41/0627

{by acting on the notification or alarm source}

Definition statement

This place covers:

Aspects related to interventions on the notifications source for stopping or limiting the sending of messages.

H04L 41/0631

{Alarm or event or notifications correlation; Root cause analysis}

Definition statement

This place covers:

Correlating notifications or messages for identifying the relevant information pointing to the same problem.

Determination of the root of a problem in general;

References

Informative references

Attention is drawn to the following places, which may be of interest for search:

Identification of network element affecting the current service quality	H04L 41/5035
Error or fault localisation, by collation, in computer systems	G06F 11/0703

H04L 41/0645

{by additionally acting on or stimulating the network after receiving notifications}

Definition statement

This place covers:

Use of additional signalling for locating the root of a problem.

H04L 41/0654

{Network fault recovery (backup route selection H04L 45/22; route fault recovery H04L 45/28; techniques for recovering from a failure of a protocol instance or entity H04L 69/40)}

Definition statement

This place covers:

Recovery from network faults with the involvement of a NMS.

Aspects relating to the management signalling for re-establishing the communication functionalities of elements.

Automatically "repairing" broken links, nodes, routes by a NMS when the network is up;

Relationships with other classification places

Redundancy within network elements, for example routers with redundant CPUs or interconnections, is classified under G06F 11/00. Where the G06F 11/00 groups refer to "interconnections", they are meant to be physical media and are of point-to-point type or of bus type.

References

Informative references

Attention is drawn to the following places, which may be of interest for search:

Selection of a alternate/backup route	H04L 45/22
Route fault recovery	H04L 45/28
Techniques for recovering from a failure of a protocol instance or entity	H04L 69/40
Error or fault handling in computer systems	G06F 11/0793

H04L 41/0659

{by isolating the faulty entity}

Definition statement

This place covers:

Removing or switching off a faulty entity without replacement.

Command or instructions for dynamically by-passing the faulty entity toward other paths, possibly by informing the neighbouring nodes.

Examples: EP1202175 (e.g. Claim 37), WO2007022183

References

Informative references

Attention is drawn to the following places, which may be of interest for search:

Reconfiguration of paths in computing systems	G06F 11/1423
Active fault-masking in computer systems, where interconnections are redundant	G06F 11/2002

H04L 41/0663

{involving offline failover planning}

Definition statement

This place covers:

Offline failover planning, command and instructions from the NMS to re-direct to a different path previously calculated.

H04L 41/0668

{selecting new candidate element}

Definition statement

This place covers:

Replacement by the best or redundant element in terms of similar capabilities/functionalities, not just replacement of the path.

Examples: EP1975802, US2011141879, EP2161877.

References

Informative references

Attention is drawn to the following places, which may be of interest for search:

Active fault-masking in computer systems, where processors are redundant	G06F 11/202

H04L 41/0672

{by re-configuring the faulty entity}

Definition statement

This place covers:

Re-booting/starting (possibly after a waiting time), re-initialise, re-setting or re-configuring (by changing parameters) in order to repair the faulty entity into the network.

Examples: EP2020776, EP2154827, EP1887759, EP1202175 (e.g. Claim 12).

References

Informative references

Attention is drawn to the following places, which may be of interest for search:

Re-configuration in response to network events	H04L 41/0816
Bootstrapping procedure in computers	G06F 9/4401
Error or fault handling in computer systems	G06F 11/0793
Faults occurring during boot-up procedure in computer systems	G06F 11/1417

H04L 41/0677

{localization of fault position}

Definition statement

This place covers:

Determining or detection of a fault with particularly emphasis on the physical or logical position of the problem with or without event correlation.

Relationships with other classification places

Aspects related to the active monitoring of the status of network elements is under H04L 43/00, specifically H04L 43/0817. However, if the monitoring activity gives rise to a the determination of a failure's position then the group H04L 41/0677 is also to be allocated.

References

Informative references

Attention is drawn to the following places, which may be of interest for search:

Error or fault detection or monitoring in computer systems	G06F 11/0751

H04L 41/0681

{involving configuration of triggering conditions}

Definition statement

This place covers:

Aspects relating to the setting of events, fault, alarm or trap conditions or threshold, metrics, which give arise to a error message,definition of a fault.

Aspects relating to when an alert is to be generated.

Examples: US2005076281

References

Informative references

Attention is drawn to the following places, which may be of interest for search:

threshold monitoring	H04L 43/16

H04L 41/0686

{involving notification enrichment}

Definition statement

This place covers:

Notification data-model.

Added-value aspects of the content of the notifications, like position, time, failure type, etc..

Adding information to the notifications, description of the notifications' attributes.

Examples: EP2154828

H04L 41/069

{involving storage or log of alarms or notifications or post-processing thereof}

Definition statement

This place covers:

Using of libraries, database or data structure parameters for saving alarms, notifications or events.

Off-line extraction or post-processing for statistics purposes or graphical representation

Examples: WO2013023837

References

Informative references

Attention is drawn to the following places, which may be of interest for search:

Error or fault reporting or logging in computer systems	G06F 11/0766

H04L 41/0695

{involving fault of the network management or monitoring system}

Definition statement

This place covers:

Actions when the manager itself fails;

H04L 41/08

{Configuration management of network or network elements (proprietary application protocols for remote control of end-devices in special networking environments H04L 67/125; automatic configuration specially adapted for wireless networks H04W 24/02)}

Definition statement

This place covers:

Aspects relating to dynamic or off-line functionality to perform operations that will provide physical and logical parameters settings to/from network or network elements.

Determination and storing of configuration information.

References

Limiting references

This place does not cover:

proprietary application protocols for remote control of end-devices in special networking environments	H04L 67/125
configuration management in the context of software development	G06F 8/71
configuration of software in general	G06F 9/44505

Informative references

Attention is drawn to the following places, which may be of interest for search:

Aspects of naming and addressing in general	H04L 61/00
Automatic configuration in wireless networks	H04W 24/02

H04L 41/0803

{Configuration setting of network or network elements (communication protocols supporting networked applications involving the movement of software or networked applications configuration parameters H04L 67/34)}

Definition statement

This place covers:

Aspects relating to assign configurations;

References

Informative references

Attention is drawn to the following places, which may be of interest for search:

Provisioning or reconfiguring application services over wireless networks	H04W 4/00
automatic configuration in wireless networks	H04W 24/02

H04L 41/0806

{for initial configuration or provisioning}

References

Limiting references

This place does not cover:

Configuration of networked applications configuration parameters	H04L 67/34
configuration management in the context of software development	G06F 8/71
configuration of software in general	G06F 9/44505

H04L 41/0809

{Plug-and-play configuration}

Definition statement

This place covers:

Aspects relating to configuration as soon as an element is being connected.

The network element having already configuration parameters ready.

References

Informative references

Attention is drawn to the following places, which may be of interest for search:

Software configuration of peripheral devices	G06F 9/4411
electrical coupling for live connection to bus	G06F 13/4081

H04L 41/082

{due to updating or upgrading of network functionality, e.g. firmware (topology update or discovery for routing purposes H04L 45/02)}

References

Informative references

Attention is drawn to the following places, which may be of interest for search:

topology update or discovery for routing purposes	H04L 45/02

H04L 41/085

{Keeping track of network configuration}

Definition statement

This place covers:

Aspects relating to reading or auditing configuration information of network elements;

Special rules of classification

This group covers a hierarchy of different miscellaneous aspects focusing on retrieving configuration data. Classification is preferably made in the appropriate subdivision below.

H04L 41/0856

{by archiving or backing up configuration information}

References

Informative references

Attention is drawn to the following places, which may be of interest for search:

Details of backing up or restoring data	G06F 11/1446

H04L 41/0863

{by rolling back to previous configuration versions}

References

Informative references

Attention is drawn to the following places, which may be of interest for search:

Details of restoration of backup data	G06F 11/1415

H04L 41/0866

{Checking configuration}

Definition statement

This place covers:

Aspects relating to validation, comparison of configuration's data.

H04L 41/0876

{Aspects of the degree of configuration automation}

Special rules of classification

This group covers a hierarchy of different miscellaneous aspects focusing on how automatic the configuration is carried out. Classification is preferably made in the appropriate subdivision below.

These groups are usually to be allocated in combination with the other groups of H04L 41/08.

H04L 41/0896

{Bandwidth or capacity management, i.e. automatically increasing or decreasing capacities, e.g. bandwidth on demand (reallocation of resources, renegotiation of resources, e.g. in-call H04L 47/76)}

Definition statement

This place covers:

Involvement of a manager for configuring elements in order to cope with the bandwidth request.

References

Informative references

Attention is drawn to the following places, which may be of interest for search:

Reallocation or renegotiation of resources, e.g. in-call	H04L 47/76

H04L 41/12

{network topology discovery or management (topology discovery for routing H04L 45/02)}

Definition statement

This place covers:

- Determination, retrieval or use of network topology (also based on routing table information) for network management purposes (e.g. Fault localisation, network analysis, configuration, graphical representation, mapping...) Both a link or network layer.
- Discovery of links, network elements and adjacencies within a network;
- Aspects relating to topology change after migration;
- Planning of the appropriate topology.

References

Limiting references

This place does not cover:

Monitor simple connectivity of an elemen	H04L 43/0811
Topology update for routing purposes	H04L 45/02
Topology discovery in wireless networks for routing purposes	H04W 40/24

Informative references

Attention is drawn to the following places, which may be of interest for search:

Details of backing up or restoring data	G06F 11/1446

H04L 41/14

{involving network analysis or design, e.g. simulation, network model or planning (network monitoring H04L 43/00)}

Definition statement

This place covers:

Aspects related to the analysis or the plan of a network.

Special rules of classification

This group covers miscellaneous aspects focusing on the analysis of the network.

Classification is preferably made in the appropriate subdivision below.

The sub-groups do not simple relate to monitoring of packets H04L 43/00 but more advanced analysis, analysis of management messages, aggregation of information in different part of the network, analysis of the network as a whole.

If the analysis is only "punctual" (single link, single path, specific elements) monitoring H04L 43/00 is to be considered.

H04L 41/142

{using statistical or mathematical methods}

Definition statement

This place covers:

Evaluation of monitored data applying advanced statistical methods and tests going beyond basic counting and averaging of frames, errors. Detecting anomalies, The analysis can be based on input from real data, when the network is or was operative.

Aspects of traffic modelling, e.g. Poisson, Markov, self-similar.

Examples: US2011078302, EP12160397

References

Informative references

Attention is drawn to the following places, which may be of interest for search:

Generation of artificial traffic for testing	H04L 43/50

H04L 41/145

{involving simulating, designing, planning or modelling of a network}

Definition statement

This place covers:

Network design tools (e.g. with integrated simulation and design testing)

modelling or abstraction of the network for behaviour simulation.

Examples: US8054757, US6735548

References

Limiting references

This place does not cover:

modelling of isolated element's of the network, auditing	H04L 41/0233, H04L 41/085/low
Network topology's graph or modelling	H04L 41/12
Radio cell planning	H04W 16/00

Informative references

Attention is drawn to the following places, which may be of interest for search:

Network design in exchanges connections	H04Q 3/0079

H04L 41/147

{for prediction of network behaviour}

Definition statement

This place covers:

The outcome of the network's analysis are instrumental for determining the future behaviour of the network, e.g. bandwidth forecast.

Examples: EP2642692, US2011078302

References

Limiting references

This place does not cover:

modelling of isolated element's of the network, auditing	H04L 41/0233, H04L 41/085/low
fault management	H04L 41/06
Radio cell planning	H04W 16/00

H04L 41/16

{Network management using artificial intelligence}

Definition statement

This place covers:

Applying artificial intelligence methods (expert systems, rule based systems, genetic algorithms) in NM.

H04L 41/18

{Arrangements involving CNM [Customer Network Management]}

Definition statement

This place covers:

Giving the customer (limited) access to NM functions.

H04L 41/20

{Network management software packages}

Definition statement

This place covers:

Particular aspects (e.g., customization, programmability or configuration) of NM software tools like HP Openview, Netview 6000, with GUIs (Graphical User Interfaces) capable of managing large and complex data networks.

Examples: US8065660

H04L 41/22

{using GUI [Graphical User Interface]}

Definition statement

This place covers:

Using a GUI to represent the architecture of the network.

Which/how the management information are displayed.

Examples: US7958450

References

Limiting references

This place does not cover:

using a browser for accessing management information	H04L 41/0253
graphical visualization of monitored data	H04L 43/045

Special rules of classification

In group H04L 41/22, the focus is on the graphical representation of the managed network, elements, objects, whereby H04L 41/0253 relates to the access to web-based management content via a browser. Graphical/visualization aspects of web browsers are therefore classified under H04L 41/22.

H04L 41/24

{using dedicated network management hardware}

Definition statement

This place covers:

(Portable) hardware equipment for managing (e.g. Configuring, logging management data,...) A device at a time.

Craft terminals used by fields technicians.

Built-in nm hardware.

Examples: EP0854606

H04L 41/26

{using dedicated tools for LAN [Local Area Network] management}

Definition statement

This place covers:

Usually NM tools operating at MAC level.

Examples: US2010281106, US2009113046

H04L 41/28

{Security in network management, e.g. restricting network management access (network architectures or network communication protocols for network security H04L 63/00; cryptographic mechanisms or cryptographic arrangements for secret or secure communication H04L 9/00; network architectures or network communication protocols for wireless network security H04W 12/00; security arrangements for protecting computers or computer systems against unauthorised activity G06F 21/00)}

Definition statement

This place covers:

Only security related to the NM system.

Aspects relating to keeping the manager and the management data secure.

Restricting access control to the NMS, encryption of management data.

Examples: EP11275030, WO2004047402, US8078707

References

Limiting references

This place does not cover:

cryptography for secret or secure communication	H04L 9/00
protocols or architecture for network security	H04L 63/00
protecting computers or computer systems against unauthorised activity	G06F 21/00
wireless network security	H04W 12/00

H04L 41/30

{Decision processes by autonomous network management units using voting and bidding}

Definition statement

This place covers:

Process for electing a unit as a master.

Bidding and electing units based on best QoS level.

Examples: EP2071764, GB2343583,

H04L 41/32

{Specific management aspects for broadband networks}

Definition statement

This place covers:

NM for traditional broadband digital cross-connect switches supporting user's communication, now being replaced by ATM or DSL-based infrastructure.

Examples: US6134238,

H04L 41/50

{Network service management, i.e. ensuring proper service fulfillment according to an agreement or contract between two parties, e.g. between an IT-provider and a customer}

Definition statement

This place covers:

aspects relating to Service level management between parties for service deployment, assurance and review over heterogeneous packet-switched data networks (e.g. IP, Ethernet, ...) irrespective of the physical transport medium and the type of service carried and the type of virtualisation (e.g. cloud).

Glossary of terms

In this place, the following terms or expressions are used with the meaning indicated:

Service Level Management	provides for continual identification, monitoring and review of the levels of IT services specified in the Service Level Agreements (SLAs). Service Level Management ensures that arrangements are in place with internal IT Support-Providers and external suppliers in the form of Operational Level Agreements (OLAs) and Underpinning Contracts (UCs), respectively.
Service Level Management functions	ensuring that the agreed IT services are delivered when and where they are supposed to be; liaising with Availability Management, Capacity Management, Incident Management and Problem Management to ensure that the required levels and quality of service are achieved within the resources agreed producing and maintaining a Service Catalogue (a list of standard IT service options and agreements made available to customers) ensuring that appropriate IT Service Continuity plans exist to support the business and its continuity requirements.
Service Level Agreement, SLA	service level agreement is a part of a service contract where the level of service is formally defined.
Quality of Service, QoS	quality measure relating to specific network parameters of traffic packets (bit rate, delays, packet loss...) which describe the treatment experienced by the packets while passing through the network .
SLA vs QoS	In order to meet the SLA requirements specific internal QoS management processes are to be implemented. SLA is namely directed to an 'aggregation' of (end-to-end) QoS parameters rather than to specific internal network metrics or is directed to QoS related to a customer (QoE).
Quality of Experience, QoE	a subjective measure of a customer's experiences with a service.

Synonyms and Keywords

In patent documents, the following words/expressions are often used with the meaning indicated:

"QoS"	of "Service Level performance" (e.g. AU2008201028, paragraph 8)

H04L 41/5003

{Managing service level agreement [SLA] or interaction between SLA and quality of service [QoS]}

Definition statement

This place covers:

General aspects relating to the description of the terms or properties of the SLA.

Aspects relating to mapping/converting SLA requirements into QoS parameters.

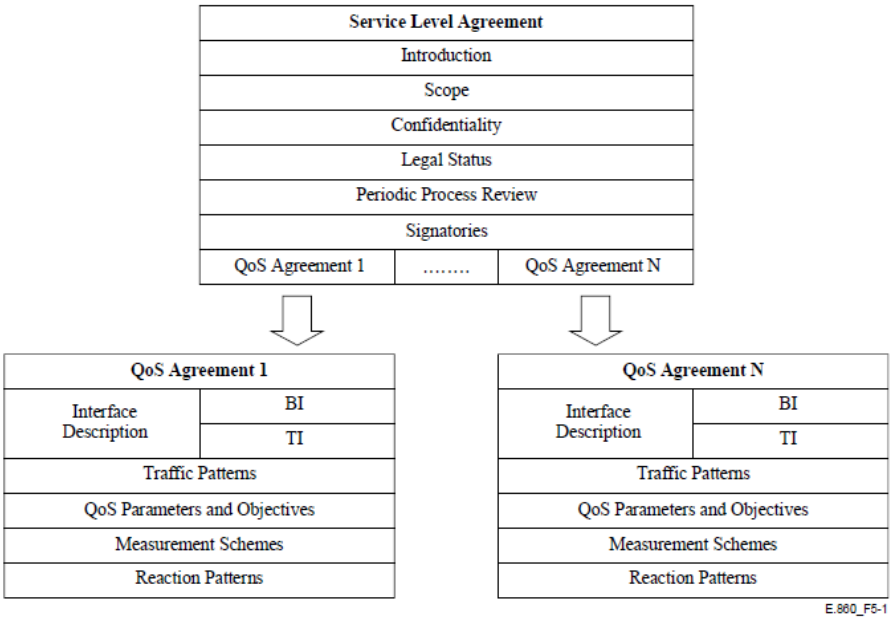

Figure 5-1/E.860 – Generic structure of a Service Level Agreement

ITU-T Rec. E.860 (Figure)

Examples: ITU-T Rec. E.860 (Figure), WO2004102896, US2012011517

H04L 41/5006

{Defining or negotiating SLA contracts, guarantees or penalties (SLA negotiation in wireless networks H04W 28/24)}

References

Informative references

Attention is drawn to the following places, which may be of interest for search:

SLA negotiation in wireless networks	H04W 28/24

H04L 41/5009

{Determining service level performance, e.g. measuring SLA quality parameters, determining contract or guarantee violations, response time or mean time between failure [MTBF] (monitoring performance metrics on a simple network level H04L 43/08)}

Definition statement

This place covers:

Aspects relating to the benchmarking for specific services.

Aspects relating to mean time to failure (mttf), mean time to recover (mttr).

Aspects relating to the overall performance of a network, e.g. Delay, reliability based on aggregation of qos parameters.

Measuring specific key performance indicators (kpi).

References

Informative references

Attention is drawn to the following places, which may be of interest for search:

Monitoring performance metrics on a simple network level	H04L 43/08

H04L 41/5019

{Ensuring SLA (flow or congestion control at network level H04L 12/569)}

References

Informative references

Attention is drawn to the following places, which may be of interest for search:

flow or congestion control at network level	H04L 47/10

H04L 41/5025

{by proactively reacting to service quality change, e.g. degradation or upgrade, by reconfiguration (mere recovery after a network faults H04L 41/0654)}

References

Limiting references

This place does not cover:

network faults recovery	H04L 41/0654
changing configuration due to adaption	H04L 41/0813

H04L 41/5029

{Service quality level based billing, e.g. dependent on measured service level customer is charged more or less (general charging or billing for transport of data packets H04L 12/14)}

References

Limiting references

This place does not cover:

General charging or billing for transport of data packets	H04L 12/14

H04L 41/5032

{Generating service level reports}

Definition statement

This place covers:

Generating a report based on data showing the performance levels for individual customers or individual services

H04L 41/5035

{Measuring contribution of individual network components to actual service level (alarm or event correlation H04L 41/0631)}

Definition statement

This place covers:

Identifying network entities such as nodes, links, applications, that affect or are responsible for actual quality of service, such as service failure or service quality degradation.

Examples: US2011082926, US7970890, EP13154069

References

Informative references

Attention is drawn to the following places, which may be of interest for search:

Alarm or event correlation	H04L 41/0631

H04L 41/5038

{Testing of service level quality, e.g. simulating service usage}

Definition statement

This place covers:

Simulating service usage by active agents to automatically measure service level compliance.

Testing based on artificial traffic, artificial customer's behaviour.

Examples: US2008181110, EP1786141.

H04L 41/5054

{Automatic provisioning of the service triggered by the service manager, e.g. concrete service implementation by automatic configuration of network components (for initializing configuration, i.e. provisioning of network or devices H04L 41/0806)}

References

Informative references

Attention is drawn to the following places, which may be of interest for search:

Initializing Configuration, i.e. provisioning of network or devices	H04L 41/0806

Examples: EP1892966, US2011158111

H04L 41/5058

{Service discovery by the service manager (automatically determining the actual topology of a network H04L 41/12; topology discovery for routing H04L 45/02; arrangements for service discovery, e.g. service location protocol H04L 67/16)}

Definition statement

This place covers:

Identifying service elements or services and dependencies among the elements and services of a network

Example: EP2330847

References

Informative references

Attention is drawn to the following places, which may be of interest for search:

Determining the actual topology of a network	H04L 41/12
Topology discovery in routers	H04L 45/02
Arrangements for service discovery, e.g. Service Location Protocol (SLP)	H04L 67/16

H04L 41/5061

{Customer care}

Definition statement

This place covers:

Order and problem handling, informing end-user of service situation.

H04L 41/5064

{Customer relationship management (arrangements involving customer network management, i.e. giving the customer access to network management functions H04L 41/18)}

Definition statement

This place covers:

- Handling of customer data, contracts, customer history
- Monitoring and recording customer interactions with the provider
- Data mining techniques for customer's data processing

Examples: EP1892966

References

Limiting references

This place does not cover:

arrangements involving Customer Network Management, i.e. giving the customer access to network management functions	H04L 41/18

H04L 41/5067

{Customer-centric quality of service [QoS] measurement}

Definition statement

This place covers:

Aspects relating to the quality or satisfaction as perceived by the customer/user, Quality of Experience (QoE).

Aspects relating to reports provided by the customer about the service quality.

Examples: EP2326044

H04L 41/507

{Filtering out customers affected by service problems}

Definition statement

This place covers:

Identifying customers affected by service problems as network element failures, network congestion or service degradation.

Examples: EP2237486

H04L 41/5074

{Handling of trouble tickets}

Definition statement

This place covers:

Aspects relating to the generation of error messages, notifications, issues, incident originated by a customer or a customer's terminal to be treated by the Service Provider.

Examples: WO2011003169, US2011082926.

References

Limiting references

This place does not cover:

alarm messages (automatically) triggered by faulty network elements	H04L 41/0677

H04L 41/5077

{wherein the managed service relates to simple transport services, i.e. providing only network infrastructure}

Definition statement

This place covers:

Aspects wherein access or connectivity to the network itself is the service, e.g. offering VLAN.

Examples: US2011060826, WO0215481

H04L 41/508

{based on type of value added network service under agreement}

Special rules of classification

The H04L 41/508 groups should be allocated only in combination with at least one of the groups from H04L 41/50 - H04L 41/5074 and only if essential for the characterisation of the service management aspects.

H04L 41/5083

{wherein the managed service relates to web hosting (web-based network application protocols H04L 67/02; web site content organization and management G06F 17/3089; video-hosting H04N 21/2743)}

References

Limiting references

This place does not cover:

web-based network application protocols	H04L 67/02
web site content organisation and management	G06F 17/3089
video-hosting	H04N 21/2743

H04L 41/5087

{wherein the managed service relates to voice services (protocols for real-time multimedia communications H04L 65/00; management of telephonic communication services H04M 3/22; management of VoIP services H04M 7/0081)}

References

Limiting references

This place does not cover:

protocols for real-time multimedia communications	H04L 65/00
management of telephonic communication services	H04M 3/22
management of VoIP services	H04M 7/0081

H04L 41/509

{wherein the managed service relates to media content delivery, e.g. audio / video / TV (protocols for real-time multimedia communications H04L 65/00; interactive television or VoD H04N 21/00)}

References

Limiting references

This place does not cover:

protocols for real-time multimedia communications	H04L 65/00
Interactive television or VoD	H04N 21/00

H04L 41/5093

{wherein the managed service relates to messaging or chat services (messaging, such as e-mail in packet-switching networks H04L 12/58; conducting a computer conference H04L 12/1822; instant messaging H04L 12/581)}

References

Limiting references

This place does not cover:

Conducting a computer conference	H04L 12/1822
Messaging, e.g e-mail and instant Messaging in packet-switching networks	H04L 51/00

H04L 41/5096

{wherein the managed service relates to distributed or central networked applications (management of file systems G06F 17/30067; management of structured data stores G06F 17/30286)}

References

Limiting references

This place does not cover:

Management of file systems	G06F 17/30067
Management of structured data stores	G06F 17/30286

H04L 43/00

{Arrangements for monitoring or testing packet switching networks (networking arrangements or communications protocols for supporting networked applications for tracking the activity of the application user H04L 67/22; monitoring of computing systems G06F 11/30; monitoring of computer activity G06F 11/34)}

Definition statement

This place covers:

- Aspects of 'passive' monitoring, e.g. Observing the network by measuring passing traffic or setting counters here and there at different points in the network
- Aspects of 'active monitoring', by introducing specific packets or modifying real data packets (also called testing)
- Monitoring qos parameters of traffic;
- Monitoring of metrics of network elements;
- Measuring performance at network/link level (availability, status)
- Report of monitored parameters;
- Testing environment and routine;
- Test traffic characterization

Relationships with other classification places

Traffic and packet monitoring techniques in H04L 43/00 are irrespective of the use which is done of the result and focuses on the monitoring techniques as such, not on the application which may be of different nature.

The group H04L 43/50 focuses on the testing platform, routine, apparatus and configuration.

Aspects related to the generation or insertion of specific type of packets (e.g. ICMP, ping, traceroute) are classified under H04L 43/10 whereas (test) traffic injection of data according to a pattern and characterization is under H04L 43/50

References

Limiting references

This place does not cover:

Filtering policies for separating internal from external traffic for security	H04L 63/0227

Tracking the activity of the application user	H04L 67/22
monitoring of computer activity	G06F 11/34

Informative references

Attention is drawn to the following places, which may be of interest for search:

Monitoring of computing systems	G06F 11/30
Supervisory, monitoring or testing arrangements specially adapted for wireless networks	H04W 24/00

Synonyms and Keywords

In patent documents, the following words/expressions are often used with the meaning indicated:

"testing"	"monitoring" or "active monitoring".

H04L 43/02

{involving a reduction of monitoring data}

Definition statement

This place covers:

Aspects relating to the selection of specific type/group of packets

H04L 43/022

{using sampling of monitoring data, i.e. storing only a selection of packets}

Definition statement

This place covers:

Aspects relating to the storing of selection of packets being which is a representative subset of packets.

H04L 43/024

{using adaptive sampling}

Definition statement

This place covers:

Dynamically adjusting the sampling rate according to specific criteria, e.g. traffic burstiness, packet rate, statistics.

Examples: US2009257352

H04L 43/026

{using flow generation}

Definition statement

This place covers:

Aggregating captured packet data into flows, a flow being defined as a unidirectional sequence of packets all sharing same network parameters mainly based on header information.

Monitoring flow, wherein the flow is usually characterised by a n-tuple of network parameters, e.g. Source/destination address, port number, protocol number (e.g. Ietf ipfix, netflow)

Monitoring, identify or classify the flow on different osi-layers.

H04L 43/028

{using filtering (alarm or event filtering H04L 41/0604)}

Definition statement

This place covers:

Reduction of monitored data by applying filters to extract specific type of packets or part of packets;

Deep packet inspection (e.g. Bpf, libpcap) including payload analysis.

Using hashing, masking for extracting and storing packets or part of packets.

Examples: wo2011134739

References

Limiting references

This place does not cover:

alarm or event filtering	H04L 41/0604
filtering policy for separating internal from external traffic for security	H04L 63/0227

H04L 43/04

{Processing of captured monitoring data}

Definition statement

This place covers:

Aspects focusing on aggregation and post-processing (including exporting, transmitting) of the monitored data, post-correlation.

Storing or logging of (part of) monitored packets.

Creation of specific data structure of the monitored packets.

Examples: ep2317698 (fig.3), us2011292818, ep11168715

H04L 43/045

{for graphical visualization of monitoring data (graphical user interfaces H04L 41/22; display of network or application conditions affecting the network application to the application user H04L 67/36; visual indication of the functioning of a computing machine G06F 11/32)}

Definition statement

This place covers:

Displaying, showing of the monitoring data/result in graphs, x-y axis, drawings.

References

Limiting references

This place does not cover:

Use of a GUI as a tool for monitoring or managing a network	H04L 41/22
display of network or application conditions affecting the applications	H04L 67/36
visual indication of the functioning of a computing machine	G06F 11/32

H04L 43/06

{Report generation}

Definition statement

This place covers:

Aspects focusing on accumulation of data extracted from packet flows for reporting or for simple statistics purposes.

H04L 43/062

{for traffic related reporting}

Definition statement

This place covers:

Reporting the overall traffic on a Tap-Point in the network.

H04L 43/065

{for device related reporting (reporting of sensed information of home appliances H04L 12/2803)}

Definition statement

This place covers:

Reporting traffic characteristics for a specific device or network node.

References

Limiting references

This place does not cover:

Reporting of sensed information of home appliances managing a network	H04L 12/2803

H04L 43/067

{for time frame related reporting}

Definition statement

This place covers:

Formatting traffic reports with respect to certain time intervals, e.g. per second, minute, hour, day or week, or configurable timeframes

H04L 43/08

{Monitoring based on specific metrics}

Definition statement

This place covers:

aspect of monitoring of packets on a network (link/node) level including QoS parameters;

aspect of monitoring of network elements' parameters (temperature, power consumption, etc.) via network protocols.

Examples: US2010229016

References

Informative references

Attention is drawn to the following places, which may be of interest for search:

Measuring performance on a service level	H04L 41/5009

H04L 43/0811

{Connectivity}

Definition statement

This place covers:

Monitoring whether a link is active or a device is connected

Checking or verifying both physical and logical connectivity, e.g., by using connectivity/continuity check messages;

Use of techniques at layer 2 or 3 of the OSI-stack.

References

Limiting references

This place does not cover:

Topology's determination	H04L 41/12

H04L 43/0817

{functioning (networked applications tracking the activity of users H04L 67/22; monitoring appliance functionality of home appliances H04L 12/2803)}

Definition statement

This place covers:

Monitoring the status of the connected device, e.g. Whether the device is working properly, monitoring network element resource metrics like cpu or memory utilization or printer utilization

References

Limiting references

This place does not cover:

monitoring appliance functionality of home appliances	H04L 12/2803
monitoring the activity of the application user	H04L 67/22

H04L 43/0823

{Errors (management of events, faults or alarms in networks or network elements H04L 41/06)}

References

Limiting references

This place does not cover:

Management of events, faults or alarms	H04L 41/06

H04L 43/0829

{Packet loss}

Definition statement

This place covers:

Monitoring of transmission data loss for all upper layers (Layers 2, 3 and above), as e.g. packet/frame/PDU loss, is classified in groups H04L 43/0829/low. A loss is often recognized via expiration of a timer (timeout) and can be caused by full buffer, overloading, discarding.

H04L 43/0847

{Transmission error}

Definition statement

This place covers:

Monitoring of transmission errors include all layer independent errors which can be recognized after reception of any transmitted data as bit errors (as e.g. CRC/checksum errors), packet errors (as e.g. duplicate packet errors, packets received after close errors), framing errors (frames too long/ short), alignment errors, framing checksum (FCS) errors, bad header errors, carrier sense errors, packet collisions, late collision errors, excessive collision errors, backward errors, duplicate message acknowledgements (ACKs), out of order packet errors.

H04L 43/0852

{Delays}

Definition statement

This place covers:

Different type of packet delays (transition time), also due to node or stack processing, buffering.

Special rules of classification

This class and the groups refer to delays irrespective of the use that is done of the delay information. For example the use of delay information for synchronizing time/clock is to be classified in H04J 3/0635.

H04L 43/0876

{Network utilization}

Definition statement

This place covers:

Aspects relating to the number of packets.

H04L 43/0882

{Utilization of link capacity}

Definition statement

This place covers:

Level of congestion, i.e. percentage or absolute value of link capacity available or used.

H04L 43/0888

{Throughput}

Definition statement

This place covers:

Observing the time required to get a certain amount of bits across a link or path, thus the ratio of bits per time unit.

H04L 43/0894

{Packet rate}

Definition statement

This place covers:

Monitoring bandwidth or packet data rate used by a traffic stream.

H04L 43/10

{using active monitoring, e.g. heartbeat protocols, polling, ping, trace-route}

Definition statement

This place covers:

Aspects related to the use of specific (standardised / well-known) 'smart' packets (ICMP, ping, probe packets, etc.) in the monitored network which stimulates a certain reaction from the monitored network.

References

Limiting references

This place does not cover:

injection or characterization of test traffic	H04L 43/50

H04L 43/106

{by adding timestamps to packets}

Definition statement

This place covers:

Inserting time-related information to the exchanged packets.

H04L 43/12

{using dedicated network monitoring probes}

Definition statement

This place covers:

Aspects specifically related to passive devices, e.g meters, capturing data units (packets, cells, frames) transiting the monitored communications network;

Distribution, architecture, topology of the monitoring devices like sniffers, taps;

Internal architecture of a probe (buffer, processor)

Examples: ep1487152, us2011286348

References

Limiting references

This place does not cover:

protocol analyzer	H04L 43/18

H04L 43/14

{using software, i.e. software packages (network security related monitoring H04L 63/1408)}

References

Limiting references

This place does not cover:

monitoring for network security	H04L 63/1408

H04L 43/16

{using threshold monitoring}

Definition statement

This place covers:

Monitoring if observed parameters or metrics are within upper or lower thresholds.

H04L 43/18

{using protocol analyzers}

Definition statement

This place covers:

Devices able to capture data (i.e. cells, packets or frames) and "understand / parse /decode" the field structure of different networking protocols in a promiscuous mode (i.e. all the data they receive) and able to process the captured data for representing the parsed / decoded data fields along with their

meanings of different packets specified by different networking protocols (e.g Wireshark) in order to facilitate the analysis for a user.

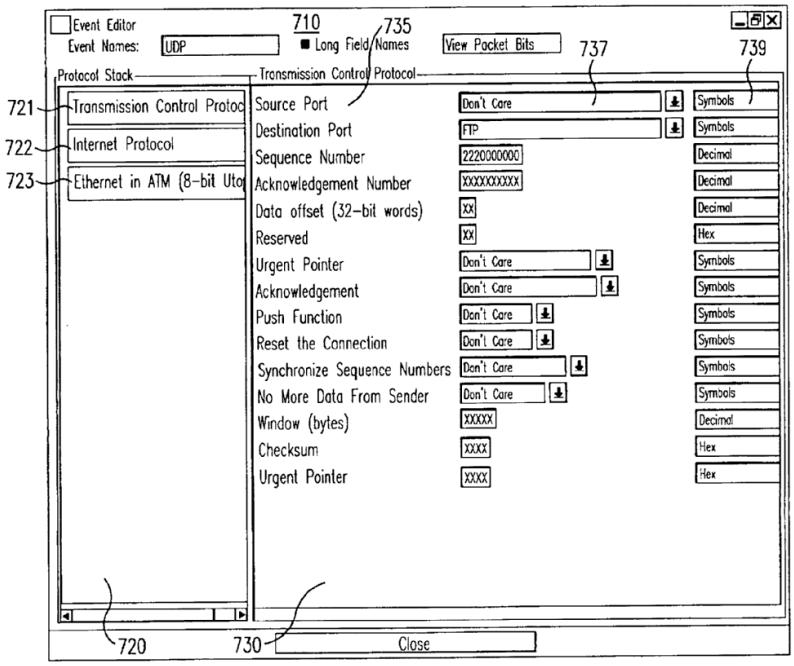

Examples: US6850852 (fig.7, above), EP1722509, US2002114273 (fig. 2, 3), WO2005018153 (fig.4, 5),

References

Limiting references

This place does not cover:

simple packet capture with probes	H04L 43/12
protocol compliance testing	H04L 43/50

H04L 43/50

{Testing arrangements}

Definition statement

This place covers:

Testing of data networks, with specific focus on the following aspects:

Architectural aspects of testing: layout of the testing environment, design of the testing system, distribution of the testing nodes in the network at specific locations, devices dedicated for testing, or networking devices that have dedicated test modes. Examples: US2006045021, WO2008137614

Functional aspects of testing: benchmark testing, design of test scripts, test sequences, traffic patterns to be injected in the network system or device to be tested.

Examples: US2009158094, EP1480379, WO2009118602, EP0522211

Testing groups of devices: testing groups of devices at once, for speeding-up the testing.

Examples: US2006179919, US2003110243

Compliance testing: testing whether a device complies to the specific protocol that it is supposed to adhere to.

Examples: WO2007103849 (fig.2B), EP1890507

References

Limiting references

This place does not cover:

Arrangements for detecting or preventing errors in the information received; testing correct operation	H04L 1/24
Testing presence of Network Address Translation "NAT", e.g. STUN, TURN, MMUSIC/ICE	H04L 29/1233
Alarm or event or notifications correlation; root cause analysis; by additionally acting on or stimulating the network after receiving notifications	H04L 41/0645
Testing of service level quality	H04L 41/5038
Active monitoring (, e.g. heartbeat protocols or polling or ping or trace-route)	H04L 43/10
Protocol analyzers	H04L 43/18
Arrangements for testing electric properties	G01R 31/00
Software testing in computer systems	G06F 11/3668
Line transmission systems; Monitoring; Testing	H04B 3/46
Transmission of information-carrying signals; Monitoring; Testing	H04B 17/00
Time-division multiplex systems; Provisions for broadband connections in integrated services digital network using frames of the Optical Transport Network (OTN) or using synchronous transfer mode (STM), e.g. SONET, SDH; Testing	H04J 2203/0062
Telephonic communication; Supervisory, monitoring, or testing arrangements in automatic or semi-automatic exchanges	H04M 3/22
Diagnosis, testing or measuring for television systems or their details	H04N 17/00
Selective content distribution; detecting features or characteristics in audio or video streams	H04N 21/4394; H04N 21/44008
Selecting arrangements for multiplex systems; Using optical techniques; Testing; Monitoring	H04Q 2011/0083

H04L 45/00

{Routing or path finding of packets in data switching networks (specially adapted for wireless routing H04W 40/00)}

References

Limiting references

This place does not cover:

Routing or path finding of packets in data switching networks (specially adapted for wireless routing	H04W 40/00)

H04L 47/00

{Traffic regulation in packet switching networks (arrangements for detecting or correcting errors in the information received H04L 1/00)}

References

Limiting references

This place does not cover:

Traffic regulation in packet switching networks (arrangements for detecting or correcting errors in the information received	H04L 1/00)]

H04L 49/00

{Packet switching elements (selecting arrangements for multiplex arrangements using optical switching H04Q 11/0001)}

References

Limiting references

This place does not cover:

Packet switching elements (selecting arrangements for multiplex arrangements using optical switching	H04Q 11/0001)

H04L 61/00

{Network arrangements or network protocols for addressing or naming}

Definition statement

This place covers:

The following aspects of addressing and naming in data networks:

- Conversion and mapping of addresses, which includes mapping between different types of addresses, e.g. ARP or mapping between telephone numbers and IP addresses and mapping between the same type of addresses, e.g. NAT;
- Directories and name-to-address resolution, e.g. DNS, LDAP, X.500, address books;
- Allocation of addresses, e.g. DHCP;
- Logical names, in particular aspects relating to the registration, conversion and structure of e.g. domain names, e-mail addresses, SIP-URIs etc.;
- Non-standard use of addresses implementing a special functionality, e.g. QoS, billing etc.

References

Limiting references

This place does not cover:

Routing or path finding of packets in data switching networks	H04L 45/00
Accessing, addressing or allocating within memory systems or architectures	G06F 12/00
Bus transfer protocol, e.g. handshake; Synchronisation	G06F 13/42

Information retrieval from the Internet by using information identifiers, e.g. URLs	G06F 17/30876
Interconnection arrangements between switching centres	H04M 7/00
Network addressing or numbering for mobility support	H04W 8/26
Network layer protocols in wireless communication networks, e.g. mobile IP	H04W 80/04

Informative references

Attention is drawn to the following places, which may be of interest for search:

Data switching networks; Arrangements for providing special services to substations for broadcast or conference	H04L 12/18
Data switching networks characterised by a path configuration; Home automation networks	H04L 12/2803
Exchanging configuration information on appliance services in a home automation network	H04L 12/2807
Data switching networks characterised by a path configuration; Bus networks	H04L 12/40
High-speed IEEE 1394 serial bus	H04L 12/40052
Data switching networks characterised by a path configuration; Interconnection of networks using encapsulation techniques, e.g. tunneling	H04L 12/4633
Arrangements for maintenance or administration or management of packet switchingnetworks using standardized network management protocols	H04L 41/0213
Arrangements for maintenance or administration or management of packet switchingnetworks; Configuration management of network or network elements	H04L 41/08
Message switching systems, e.g. electronic mail systems	H04L 51/00
Network architectures or network communication protocols for network security for separating internal from external traffic, e.g. firewalls	H04L 63/02
Network architectures or network communication protocols for network security for separating internal from external traffic; Firewall traversal, e.g. tunneling or creating pinholes	H04L 63/029
Network architectures or network communication protocols for network security for providing a confidential data exchange among entities communicating throughdata packet networks	H04L 63/04
Network architectures or network communication protocols for network security for supporting authentication of entities communicating through a packet data network	H04L 63/08
Network arrangements or protocols for real-time communications	H04L 65/00
Network arrangements or protocols for real-time communications; Signalling, control or architecture; Session control; Registration	H04L 65/1073
Network-specific arrangements or communication protocols supporting networked applications in which an application is distributed across nodes in the network for accessing one among a plurality of replicated servers, e.g. load balancing	H04L 67/1002

Network-specific arrangements or communication protocols supporting networked applications adapted for proprietary or special purpose networking environments	H04L 67/12
Network-specific arrangements or communication protocols supporting networked applications; Service discovery or service management	H04L 67/16
Network-specific arrangements or communication protocols supporting networked applications; Presence management	H04L 67/24
Network-specific arrangements or communication protocols supporting networked applications for the provision of proxy services, e.g. intermediate processing or storage in the network	H04L 67/28
Network-specific arrangements or communication protocols supporting networked applications involving the movement of software and/or configuration parameters	H04L 67/34
Protocols for interworking or protocol conversion	H04L 69/08
Electric or fluid circuits specially adapted for vehicles for supply of electrical power to vehicle subsystemsusing multiplexing techniques	B60R 16/0315
Information retrieval using distributed data base systems	G06F 17/30283
Administration, e.g. office automation or reservations	G06Q 10/00
Commerce, e.g. shopping or e-commerce	G06Q 30/00
Telephone directories in user terminals	H04M 1/27
Directory assistance systems	H04M 3/4931
Details of addressing, directories or routing tables of networks other than PSTN/ISDN providing telephone service, e.g. Voice over Internet Protocol	H04M 7/0075
Details of addressing, directories or routing tables for working between exchanges having different types of switching equipment, where the types of switching equipment comprises PSTN/ISDN equipment and switching equipment of networks other than PSTN/ISDN,	H04M 7/128
Processing of mobility data,Registration at HLR or HSS	H04W 8/04
Network data management; Mobility data transfer	H04W 8/08
Network addressing or numbering for mobility support	H04W 8/26
Registration; Multiple registrations, e.g. multihoming	H04W 60/005
Network layer protocols in wireless communication networks, e.g. mobile IP	H04W 80/04
Network topologies; Self-organizing networks, e.g. ad-hoc networks or sensor networks	H04W 84/18
Devices specially adapted for wireless communication networks	H04W 88/00
Devices specially adapted for wireless communication networks adapted for operation in multiple networks	H04W 88/06

Special rules of classification

- Address resolution is covered in H04L 61/10, whereas name-to-address-resolution is covered in H04L 61/20.
- ENUM is based on DNS and should therefore be classified under Directories in H04L 61/157 and not in H04L 61/106.
- The Address Allocation subgroup H04L 61/2084 covers "portability" aspects not covered in H04W 8/26 or H04W 80/04, e.g. nomadic users in a hotel.

- IPv4 and IPv6 addresses are considered to be of the same type. Therefore a mapping between these address types should be classified in H04L 61/251 and not in H04L 61/10.
- The Details subgroup (H04L 61/60) should be used as an additional classification in H04L 61/00, i.e. if other H04L 61/00 subgroups in the range H04L 61/10 - H04L 61/35 have already been assigned.

Synonyms and Keywords

In patent documents, the following abbreviations are often used:

ARP	Address Resolution Protocol
DHCP	Dynamic Host Configuration Protocol
DNS	Domain Name System
GRUU	Globally Routable UA URI
LDAP	Lightweight Directory Access Protocol
NAT	Network Address Translation
RARP	Reverse Address Resolution Protocol
STUN	Session Traversal Utilities for NAT
TURN	Traversal Using Relay NAT
URI	Uniform Resource Identifier

H04L 63/00

{Network architectures or network communication protocols for network security (cryptographic mechanisms or cryptographic arrangements for secret or secure communication H04L 9/00; network architectures or network communication protocols for wireless network security H04W 12/00; security arrangements for protecting computers or computer systems against unauthorised activity G06F 21/00)}

Definition statement

This place covers:

Networking architectures and network communication protocols for securing the traffic flowing through data packet networks and providing secure exchanges among applications communicating through data packet networks. The group covers specifically network architectures and network communication protocols for supporting:

- filtering (e.g. transferring, blocking, dropping) traffic according to security rules;
- authenticating and authorizing the entities sending and/or receiving the traffic;
- protecting the data packets against unauthorized reading or modification;
- detecting intruders and preventing the transmission of unauthorized, malicious or forged packets;
- lawful interception for legally authorised parties to access protected information.

H04L 63/00 focuses on network architectures (i.e. network entities involved, roles played by these entities) and network communication protocols (i.e. how these network entities communicate) regardless of the specifics of the cryptographic mechanism used.

Relationships with other classification places

H04W 12/00 Wireless networking architectures and wireless network communication protocols for securing the traffic flowing through wireless data packet networks and providing secure exchanges among applications communicating through wireless data packet networks. The group covers

specifically wireless network architectures and wireless network

communication protocols for supporting:

- Authenticating and authorizing the entities sending and/or receiving the traffic;
- Protecting the data packets against unauthorized reading or modification;
- Detecting intruders, rogue entities and preventing the transmission of unauthorized, malicious or forged packets;
- Lawful interception for legally authorised parties to access protected information.

H04W 12/00 focuses on wireless network architectures (i.e. wireless network entities involved, roles played by these entities) and wireless network communication protocols (i.e. how these network entities communicate) regardless of the specifics of the cryptographic mechanism used.

Details for wireless network security are classified where appropriate by the combination of H04W 12/00 subgroup and H04L 63/00 detailed subgroup.

H04L 12/22 subject-matter is always classified in the corresponding subclasses of H04L 63/00 and or H04W 12/00.

H04L 9/00 Cryptographic mechanisms including cryptographic protocols and cryptographic algorithms, whereby a cryptographic protocol is a distributed cryptographic algorithm defined by a sequence of steps precisely specifying the actions required of two or more entities to achieve specific security objectives (e.g. cryptographic protocol for key agreement), and whereby a cryptographic algorithm is specifying the steps followed by a single entity to achieve specific security objectives (e.g. cryptographic algorithm for symmetric key encryption).

H04L 9/00 focuses on cryptographic mechanisms such as encryption schemes, digital signatures, hash functions, random number generation, key management, said cryptographic mechanisms providing information security such as privacy or confidentiality, data integrity, message authentication, entity authentication, authorization, validation, certification, time-stamping, anonymity, revocation, non-repudiation.

H04L 9/00 covers also countermeasures against attacks on cryptographic mechanisms.

G06F 21/00 Security arrangements for protecting computers or computer systems against unauthorised activity, where the network communication aspect is not important.

References

Limiting references

This place does not cover:

cryptographic mechanisms or cryptographic arrangements for secret or secure communication	H04L 9/00
Security in Network Management, e.g. restricting network management access	H04L 12/2461
Non security aspects of network monitoring arrangements, in particular data switching networks monitoring arrangements involving a reduction of monitoring data using filtering	H04L 12/2602
Non security aspects of VPN are classified in	H04L 12/4641
Protection against unsolicited messages, e.g. Spam	H04L 12/585
Unsolicited communication attempts in real-rime communications, e.g. SPIT = Spam in IP Telephony	H04L 65/1079
Non security aspects of communications control adapted for proprietary and special purpose networking	H04L 67/12

security arrangements for protecting computers or computer systems against unauthorised activity	G06F 21/00
Registering, indicating or recording the time of events or elapsed time, e.g. time-recorders for work people	G07C 9/00
Systems for paying without using coins or banknotes, e.g. smart cards.	G07F 7/00
Lawful interception of POTS calls	H04M 3/2281
Secrecy in the context of scanning, transmission or reproduction of documents or the like	H04N 1/44
Secrecy and Subscription systems in television systems	H04N 7/16
Security in selective content distribution, e.g. interactive television, VOD	H04N 21/00
network architectures or network communication protocols for wireless network security	H04W 12/00

Informative references

Attention is drawn to the following places, which may be of interest for search:

Documents related to vehicle alarm	B60R 25/00
Documents related to electronic door lock	E05B 47/00
Payment schemes, architectures or protocols	G06Q 20/00
Documents related to burglar, theft and intruder alarm	G08B 13/00
Documents related to combined burglar and fire alarm	G08B 19/00
Documents related to alarm, in which the location of the alarm is signalled to a central station	G08B 25/00

Special rules of classification

Classification of the additional aspects of an application in H04L 63/00 is mandatory.

In some cases specific protocols (e.g. IPsec, EAP, TLS) and/or architectures (firewalls, AAA) are used. In other cases existing network protocols, architectures and services are modified to achieve the security goals. In such cases, the documents are classified both in the corresponding security subgroups and in the respective application subgroups of e.g. addressing H04L 61/00, mobile services H04W 4/00, routing H04L 47/00 or cryptographic mechanisms H04L 9/00).

Glossary of terms

In this place, the following terms or expressions are used with the meaning indicated:

RFC 4949	Internet Security Glossary, Version 2; definition of Internet Security Terms

H04L 63/02

{for separating internal from external traffic, e.g. firewalls}

Definition statement

This place covers:

Here are classified the documents related to the (logical) separation of traffic/(sub-) networks to achieve protection.

Glossary of terms

In this place, the following terms or expressions are used with the meaning indicated:

ALG	Application Level Gateway

H04L 63/0209

{Architectural arrangements, e.g. perimeter networks or demilitarized zones}

Definition statement

This place covers:

Here are classified devices and arrangements like firewalls, perimeter networks, bastion hosts, demilitarized zones, etc that are placed at the interface between two or more (sub-)networks, usually a private network (e.g. Intranet) and the public network.

H04L 63/0218

{Distributed architectures, e.g. distributed firewalls}

Definition statement

This place covers:

Systems where every host, e.g. network interface card or dedicated security box, includes firewall capabilities or systems where firewalls communicate to share attack information and improve their efficiency.

Relationships with other classification places

Multiple firewall nodes (cluster) for high-availability or load-distribution	H04L 67/1002

H04L 63/0227

{Filtering policies (mail message filtering H04L 12/585)}

Definition statement

This place covers:

Aspects related to how traffic is filtered.

H04L 63/0236

{Filtering by address, protocol, port number or service, e.g. IP-address or URL}

Definition statement

This place covers:

Filtering of traffic based on address information, e.g. IP-address or URL or packet header information, e.g. protocol number or port number.

H04L 63/0245

{Filtering by information in the payload}

Definition statement

This place covers:

Filtering of information is performed based on the contents of the application payload.

Documents referring to content filtering in general and just mentioning virus scanning as a possible application are also classified here

Relationships with other classification places

When the application payload is inspected specifically to detect viruses, worms, exploits etc, the documents are classified in	H04L 63/145
Parental control, rating systems etc where the filtering depends on user or machine profile are also classified in	H04L 63/10

References

Informative references

Attention is drawn to the following places, which may be of interest for search:

Specialized CPUs or hardware for application information filtering/parsing	H04L 69/22

H04L 63/0254

{Stateful filtering}

Definition statement

This place covers:

Stateful firewall keeping track of the state of network connections, e.g. TCP streams, travelling across it being able to filter packets according rules and/or taking appropriate action (e.g. cleaning, discarding, forwarding).

Relationships with other classification places

Monitoring of connection state to detect and mitigate attacks (e.g. SYN attacks)	H04L 63/1441

H04L 63/0263

{Rule management}

Definition statement

This place covers:

Aspects related to how the filtering rules are organized, defined, evaluated or added in a firewall are classified here.

Relationships with other classification places

Rule management in the sense of access control rules to access to network resources (authorisation)	H04L 63/101
Security policies in general	H04L 63/20

H04L 63/0272

{Virtual private networks}

Definition statement

This place covers:

Restricted-use, logical networks constructed from the system resources of a relatively public, physical network, e.g.Internet, realised e.g. using encryption or tunnelling links of the virtual network across the real network, e.g. using IPsec ESP between security gateways.

References

Informative references

Attention is drawn to the following places, which may be of interest for search:

Non security aspects of VPN	H04L 12/4641

H04L 63/0281

{Proxies}

Definition statement

This place covers:

Relaying protocol(s) between e.g. client and server systems, by appearing to the client to be the server and appearing to the server to be the client.

Instead of a client in the protected enclave connecting directly to an external server, the internal client connects to the proxy server which in turn connects to the external server. The proxy may be transparent to the clients, or they may need to connect first to the proxy server, and then use that association to also initiate a connection to the real server. Proxies may provide protocol/application specific functionality (e.g. HTTP Proxy) or may provide generic connection services (e.g. SOCKS). Proxies can provide security service beyond that which is normally part of the relayed protocol, such as access control based on peer entity authentication of clients, or peer entity authentication of servers when clients do not have that capability. These aspects should be classified in the appropriate sub-groups.

References

Informative references

Attention is drawn to the following places, which may be of interest for search:

Non security aspects of proxies where processing is performed in an intermediate network node	H04L 67/28

Special rules of classification

Using a proxy for authentication is classified here in combination with H04L 63/08 (and subgroups).

H04L 63/029

{Firewall traversal, e.g. tunnelling or, creating pinholes}

Definition statement

This place covers:

The mechanisms for achieving connections through firewalls are classified here, e.g. tunnelling the application protocol in a protocol that is allowed through the firewall (e.g. HTTP, SMTP) or using of an application layer gateway which understands the application message and opens the appropriate pinholes in the firewall.

References

Informative references

Attention is drawn to the following places, which may be of interest for search:

Non secure NAT traversal	H04L 61/256

Special rules of classification

For some documents H04L 63/0281 is also to assign.

H04L 63/04

{for providing a confidential data exchange among entities communicating through data packet networks}

Definition statement

This place covers:

Network architectures and communication protocols for implementing confidentiality of information transmitted over a data packet network, most often by applying cryptographic mechanisms. Also classified here are networking architectures and protocols for anonymous communications.

Relationships with other classification places

Confidential data exchange adapted to wireless networks	H04W 12/02

References

Limiting references

This place does not cover:

Cryptographic mechanisms or algorithms per se	H04L 9/00

H04L 63/0407

{wherein the identity of one or more communicating identities is hidden (cryptographic mechanisms or cryptographic arrangements for anonymous credentials or for identity based cryptographic systems H04L 9/00)}

Definition statement

This place covers:

Protecting the identity of a party (origin or destination) against disclosure to a third party (eavesdropper) or the other party.

References

Informative references

Attention is drawn to the following places, which may be of interest for search:

Protecting personal data on a computer, e.g. for financial or medical purposes	G06F 21/6245

H04L 63/0414

{during transmission, i.e. party's identity is protected against eavesdropping, e.g. by using temporary identifiers, but is known to the other party or parties involved in the communication}

Definition statement

This place covers:

The identity is only known to the other party or parties involved in the communication. Protecting the party's identity usually involves specific techniques which are different from message confidentiality, since the identity is used for routing and authentication purposes.

H04L 63/0421

{Anonymous communication, i.e. the party's identifiers are hidden from the other party or parties, e.g. using an anonymizer}

Definition statement

This place covers:

The identity of one of the parties is not disclosed to the other party. Some techniques involve the use of aliases, anonymizer proxies, onion routing, etc.

References

Limiting references

This place does not cover:

Cryptographic techniques for anonymity, e.g. electronic voting, cryptographic pseudonyms	H04L 9/32

Informative references

Attention is drawn to the following places, which may be of interest for search:

Protecting personal data on a computer by anonymising	G06F 21/6254

H04L 63/0428

{wherein the data content is protected, e.g. by encrypting or encapsulating the payload}

Definition statement

This place covers:

Communication protocols used to protect the information exchanged through networks. Also are classified here architectural arrangements to achieve the protection, e.g. encryption proxies. The subgroups identify specific techniques therefore.

H04L 63/045

{wherein the sending and receiving network entities apply hybrid encryption, i.e. combination of symmetric and asymmetric encryption (cryptographic mechanisms or cryptographic arrangements using a plurality of keys or algorithms H04L 9/14)}

Definition statement

This place covers:

Symmetric and asymmetric encryption is combined. Usually symmetric encryption is used to protect the message and the symmetric (session) key is encrypted using asymmetric encryption, so no one other than the intended recipient can "open" the message.

References

Limiting references

This place does not cover:

Cryptographic mechanisms using a plurality of keys or algorithms	H04L 9/14

Glossary of terms

In this place, the following terms or expressions are used with the meaning indicated:

digital envelope	the combination of the encrypted data and the encrypted key

H04L 63/0457

{wherein the sending and receiving network entities apply dynamic encryption, e.g. stream encryption (cryptographic mechanisms or cryptographic arrangements for stream encryption H04L 9/065)}

Definition statement

This place covers:

Stream encryption, i.e. serially and continuously modifying data streams.

References

Limiting references

This place does not cover:

Cryptographic mechanisms for stream encryption	H04L 9/0643

H04L 63/0485

{Networking architectures for enhanced packet encryption processing, e.g. offloading of IPsec packet processing or efficient security association look-up}

Definition statement

This place covers:

Hardware and software architectures, e.g. IPsec offloading, specifically adapted for improving the process of encrypting and decrypting packets and handling the security association tables.

H04L 63/06

{for supporting key management in a packet data network (cryptographic mechanisms or cryptographic arrangements for key management H04L 9/08)}

Definition statement

This place covers:

Network architectures and communication protocols for negotiation, transport, validation, or update of security keys or credentials (i.e. specific network entities involved and the network protocols used) regardless of whether they are used for confidentiality (privacy), authentication, access control or for integrity validations in order to strictly differentiate between the initialisation phase (i.e., key distribution/exchange phase) of any secure communication and the secure communication itself.

Relationships with other classification places

Key management specially adapted for wireless networks	H04W 12/04

References

Limiting references

This place does not cover:

Cryptographic mechanisms for key management	H04L 9/08

H04L 63/061

{for key exchange, e.g. in peer-to-peer networks (cryptographic mechanisms or cryptographic arrangements for key agreement H04L 9/0838)}

Definition statement

This place covers:

Exchanging the respective security keys directly between two communicating parties such as e.g. in peer-to-peer networks.

References

Limiting references

This place does not cover:

The cryptographic mechanisms or cryptographic arrangements for key agreement	H04L 9/0838

Glossary of terms

In this place, the following terms or expressions are used with the meaning indicated:

Typical standardised protocols for key exchange are IKE (Internet Key Exchange) or ISAKMP (Internet Security Association and Key Management Protocol).

H04L 63/062

{for key distribution, e.g. centrally by trusted party (cryptographic mechanisms or cryptographic arrangements for key distribution involving a central third party H04L 9/0819)}

Definition statement

This place covers:

Distributing the respective security keys from a central trusted party such as a Key Distribution Centre (KDC) to the attached network nodes. A typical (hierarchical) architecture for key distribution is represented by PKI (Public Key Infrastructure).

References

Limiting references

This place does not cover:

The cryptographic mechanisms or cryptographic arrangements for key distribution involving a central third party	H04L 9/083

H04L 63/065

{for group communications (cryptographic mechanisms or cryptographic arrangements for key management involving conference or group key H04L 9/0833)}

Definition statement

This place covers:

Key exchange or distribution within multicast/broadcast networks typically by using a group key for confidentiality and/or authentication purposes (typical protocol standard: Group Key Management Protocol GKMP).

References

Limiting references

This place does not cover:

Cryptographic mechanisms or cryptographic arrangements for key management involving conference or group key	H04L 9/0833

H04L 63/067

{using one-time keys (cryptographic mechanisms or cryptographic arrangements for generation of one-time passwords H04L 9/0863)}

Definition statement

This place covers:

Keys are only used once.

References

Limiting references

This place does not cover:

Cryptographic mechanisms or cryptographic arrangements for generation of one-time passwords	H04L 9/0863

H04L 63/068

{using time-dependent keys, e.g. periodically changing keys (cryptographic mechanisms or cryptographic arrangements for controlling usage of secret information H04L 9/088)}

Definition statement

This place covers:

Periodically changing keys, e.g., based on time stamps.

Relationships with other classification places

The aspects related to password renewal	H04L 63/0846

References

Limiting references

This place does not cover:

Cryptographic mechanisms or cryptographic arrangements for controlling usage of secret information	H04L 9/088

H04L 63/08

{for supporting authentication of entities communicating through a packet data network (cryptographic mechanisms or cryptographic arrangements for entity authentication H04L 9/32)}

Definition statement

This place covers:

Verifying the identity of a user, device or application trying to gain access to (resources of) a network or documents describing authentication protocols and specific network architectures therefore.

Relationships with other classification places

Authentication specially adapted for wireless networks	H04W 12/06

References

Limiting references

This place does not cover:

Cryptographic mechanisms for entity authentication	H04L 9/32

Informative references

Attention is drawn to the following places, which may be of interest for search:

Those documents where the network aspects are not relevant	G06F 21/30
Active credit-cards provided with means to personalise their use	G07F 7/1008

Special rules of classification

The selection of an authentication mechanism is classified in H04L 63/08 in combination with H04L 63/205 or H04L 69/24.

Using a proxy for authentication is classified here in combination with H04L 63/0281.

Authentication using multiple network paths is classified in appropriate H04L 63/08 subgroup in combination with H04L 63/18.

Glossary of terms

In this place, the following terms or expressions are used with the meaning indicated:

Authentication	Identify if the entity is the one he/she claims to be. Remark: authentication and authorisation are sometimes used with the other meaning in patent literature as well as in non patent literature

H04L 63/0807

{using tickets, e.g. Kerberos (cryptographic mechanisms or cryptographic arrangements for entity authentication using tickets or tokens H04L 9/3213)}

Definition statement

This place covers:

Ticket-based authentication mechanisms, e.g. Kerberos, SESAME. Tickets may be transmitted in different ways, e.g. in a cookie.

Relationships with other classification places

When the same ticket enables the authentication to a plurality of network resources, e.g. Single-Sign-On	H04L 63/0815

References

Limiting references

This place does not cover:

Cryptographic mechanisms or cryptographic arrangements for entity authentication using tickets or tokens	H04L 9/3213

Informative references

Attention is drawn to the following places, which may be of interest for search:

Digital data processing restricting access to computer systems by authenticating users, devices or programs using a predetermined code using a certificate from a trusted centre or via a trusted hierarchical route	G06F 21/335

H04L 63/0815

{providing single-sign-on or federations}

Definition statement

This place covers:

Mechanisms where a user/device supplies a single authentication credential and gets access to a plurality of resources in a network.

H04L 63/0823

{using certificates (cryptographic mechanisms or cryptographic arrangements for entity authentication involving certificates H04L 9/3263)}

Definition statement

This place covers:

Authentication is based on certificates; also issuing or retrieval of certificates.

References

Limiting references

This place does not cover:

Cryptographic mechanisms or cryptographic arrangements for entity authentication involving certificates	H04L 9/3263

Informative references

Attention is drawn to the following places, which may be of interest for search:

Computer user authentication using certificates	G06F 21/33

Special rules of classification

Documents related to the use of certificates for authorization (e.g. attribute certificates) are classified in combination with H04L 63/10.

H04L 63/083

{using passwords (cryptographic mechanisms or cryptographic arrangements for entity authentication using a predetermined code H04L 9/3226)}

Definition statement

This place covers:

If string of characters, not only actual words, but also passcodes (like PIN), software tokens or keys, is used for authentication.

References

Limiting references

This place does not cover:

Cryptographic mechanisms or cryptographic arrangements for entity authentication using a predetermined code	H04L 9/3226

H04L 63/0846

{using time-dependent-passwords, e.g. periodically changing passwords}

Definition statement

This place covers:

Time synchronisation exists between e.g. the supplicant and the authenticator or periodically changing passwords or password expiration or password ageing aspects.

H04L 63/0853

{using an additional device, e.g. smartcard, SIM or a different communication terminal (cryptographic mechanisms or cryptographic arrangements for entity authentication involving additional secure or trusted devices H04L 9/3234)}

Definition statement

This place covers:

The authentication is performed using additional devices, e.g. smartcards, SIM or similar devices for authentication, an additional communication device (e.g. using a mobile telephone for authenticating a session established through a computer connected to a data network)

References

Informative references

Attention is drawn to the following places, which may be of interest for search:

Digital data processing restricting access to computer systems by authenticating users, devices or programs using a predetermined code in combination with an additional device	G06F 21/123
Payment schemes, architectures or protocol characterised by the use of a wireless device	G06Q 20/32
Active credit cards provided with means to personalise their use, e.g. with PIN-introduction/comparison system	G07F 7/1008

Special rules of classification

When the additional device establishes an additional channel for performing the authentication, the document is also classified in H04L 63/18

H04L 63/0861

{using biometrical features, e.g. fingerprint, retina-scan (cryptographic mechanisms or cryptographic arrangements for entity authentication using biological data H04L 9/3231)}

Definition statement

This place covers:

Authentication in network or networks based on biometric features e.g. fingerprint, retina-scan

References

Limiting references

This place does not cover:

Cryptographic mechanisms or cryptographic arrangements entity authentication using biological data	H04L 9/3231

Informative references

Attention is drawn to the following places, which may be of interest for search:

User authentication on a computer using biometric features	G06F 21/32

H04L 63/0869

{for achieving mutual authentication (cryptographic mechanisms or cryptographic arrangements for mutual authentication H04L 9/3273)}

Definition statement

This place covers:

Authentication of both parties communicating over network.

References

Limiting references

This place does not cover:

Cryptographic mechanisms or cryptographic arrangements for mutual authentication	H04L 9/3273

Informative references

Attention is drawn to the following places, which may be of interest for search:

Mutual authentication between programs	G06F 21/445

H04L 63/0876

{based on the identity of the terminal or configuration, e.g. MAC address, hardware or software configuration or device fingerprint}

Definition statement

This place covers:

The authentication is performed based on the identity of the terminal e.g. MAC address or other address or configuration of hardware or software or device fingerprint.

H04L 63/0884

{by delegation of authentication, e.g. a proxy authenticates an entity to be authenticated on behalf of this entity vis-?-vis an authentication entity}

Definition statement

This place covers:

The authentication is delegated to another entity which acts on behalf of the entity to be authenticated.

H04L 63/0892

{by using authentication-authorization-accounting [AAA] servers or protocols}

Definition statement

This place covers:

AAA servers or protocols are used to authenticate entities.

H04L 63/10

{for controlling access to network resources (restricting network management access H04L 12/2461)}

Definition statement

This place covers:

Mechanisms to allow or restrict the access to a network or to some network elements or resources, for example by restricting access to a particular group of computers or contents based on their address or based on the identity of the network user (e.g. list of forbidden websites, parental control).

Relationships with other classification places

Access control in wireless networks	H04W 12/08

References

Limiting references

This place does not cover:

Restricting network management access	H04L 12/2461

Informative references

Attention is drawn to the following places, which may be of interest for search:

Protection of software on a computer against unauthorized usage (e.g. DRM)	G06F 21/10
Protection of data on a computer against unauthorized access or modification	G06F 21/121

Glossary of terms

In this place, the following terms or expressions are used with the meaning indicated:

Authorisation	Identify which rights are assigned to an entity. Remark: authentication and authorisation are sometimes used with the other meaning in patent literature as well as in non patent literature

H04L 63/101

{Access control lists [ACL]}

Definition statement

This place covers:

Authorization is implemented via access control lists.

H04L 63/102

{Entity profiles}

Definition statement

This place covers:

Documents are classified here when they focus on the use of entity profiles, e.g. device profiles or user profiles to manage access decisions. Also documents related to identity management are classified here.

H04L 63/104

{Grouping of entities}

Definition statement

This place covers:

Mechanisms for implementing access control to group or groups of entities.

Relationships with other classification places

Role based access control (each entity is associated to a group/role, and each role has a different privilege level)	H04L 63/105

H04L 63/105

{Multiple levels of security}

Definition statement

This place covers:

Mechanisms for implementing multiple levels of security or different access rights according to entities (e.g. device or user) security clearance, to security profiles, roles or to security perimeters (i.e. different zones of a network need different security clearance/levels; data pump i.e. low level security is able to communicate with higher level and not vice versa)

H04L 63/107

{wherein the security policies are location-dependent, e.g. entities privileges depend on current location or allowing specific operations only from locally connected terminals}

Definition statement

This place covers:

Security policies being different for a user or an entity dependent on the current location

References

Informative references

Attention is drawn to the following places, which may be of interest for search:

Mobile application services making use of the location of users or terminals	H04W 4/02

H04L 63/12

{Applying verification of the received information (cryptographic mechanisms or cryptographic arrangements for data integrity or data verification H04L 9/32)}

Definition statement

This place covers:

Network architectures and communication protocols mechanisms, e.g. signatures, MIC/MAC codes and others more, for guarantying the integrity of the information exchanged through a packet data network are classified here. Both the aspect of verifying the content and the identity of the source are classified here. Documents emphasizing one of the sub-aspects are classified in the corresponding subclass.

Relationships with other classification places

When specially adapted to wireless networks	H04W 12/10

References

Limiting references

This place does not cover:

Cryptographic mechanisms or cryptographic arrangements for data integrity and verification	H04L 9/32

Informative references

Attention is drawn to the following places, which may be of interest for search:

Protecting data on a computer against unauthorised access or modification, protecting integrity	G06F 21/64

H04L 63/123

{received data contents, e.g. message integrity}

Definition statement

This place covers:

Network ensures that the content has not been tampered with during transmission through the network.

H04L 63/126

{the source of the received data}

Definition statement

This place covers:

Verification of the identity of the original source of received data is applied (non-repudiation with proof of origin, non-repudiation with proof of receipt, trust level of identity and/or source).

H04L 63/14

{for detecting or protecting against malicious traffic}

Definition statement

This place covers:

Detection and protection against network attacks.

Relationships with other classification places

Detection and protection aspects specific of wireless networks (e.g. detection of rogue entities, access points); if appropriate, the corresponding H04L 63/14 subgroup is also to assign.	H04W 12/12

References

Informative references

Attention is drawn to the following places, which may be of interest for search:

Virus detection algorithms within a computer	G06F 21/56
Intrusion is detected based on the activity within a computer (e.g. controlling the memory access, watching the execution of the programs, watching traces of failed login attempts, etc.), this is what usually is referred to in the bibliography as Host-based IDS	G06F 21/566

H04L 63/1408

{by monitoring network traffic (monitoring network traffic per se H04L 12/2602)}

Definition statement

This place covers:

Detection of attacks involves monitoring the traffic on the network. Detection can be performed by different means; anomaly detection (comparing monitored traffic against normal traffic); misuse detection (detecting specific traces which imply an attack).

References

Informative references

Attention is drawn to the following places, which may be of interest for search:

General traffic monitoring aspects	H04L 43/00

H04L 63/1416

{Event detection, e.g. attack signature detection}

Definition statement

This place covers:

Real time detection of attacks or intrusion attempts (e.g. "misuse detection").

H04L 63/1425

{Traffic logging, e.g. anomaly detection}

Definition statement

This place covers:

Traffic logging for security purposes (e.g. detecting normal or anomalous behaviour; comparing behaviour; offline analysis using data mining, network security audit); non-real detection for deferred analysis.

H04L 63/1433

{Vulnerability analysis}

Definition statement

This place covers:

Active probing of the network looking for vulnerable points, e.g. performing port scans, sending malformed packets and checking if they are detected.

H04L 63/1441

{Countermeasures against malicious traffic (countermeasures against attacks on cryptographic mechanisms H04L 9/002)}

Definition statement

This place covers:

Detection and mitigation of particular types of attacks.

H04L 63/1458

{Denial of Service}

Definition statement

This place covers:

Mitigation of denial of service attacks (also referred to as flooding, overload or congestion attacks) are classified here. Some techniques involve identification of the path followed by the attack. Some other techniques include rate limitation (throttling) or QoS (separation in different class of service). Some documents relate to black-hole attacks, wherein a malicious node discards all or part of the traffic (black-hole, gray-hole, worm-hole).

References

Informative references

Attention is drawn to the following places, which may be of interest for search:

For QoS may be also relevant	H04L 47/10
Ad-hoc environments	H04W 84/18

H04L 63/1466

{Active attacks involving interception, injection, modification, spoofing of data unit addresses, e.g. hijacking, packet injection or TCP sequence number attacks}

Definition statement

This place covers:

Protection against active wire tapping in which the attacker attempts to seize control of a communication association, e.g. packet injection or modifying, hijacking sessions, TCP sequence number attacks, piggyback attacks, man-in-the-middle attacks, spoofing etc.

H04L 63/1475

{Passive attacks, e.g. eavesdropping or listening without modification of the traffic monitored}

Definition statement

This place covers:

Passively monitoring an existing session without the session participants noticing; e.g. eavesdropping or listening without modification of the traffic monitored.

H04L 63/1483

{service impersonation, e.g. phishing, pharming or web spoofing (detection of rogue wireless access points H04W 12/12)}

Relationships with other classification places

Detection of rogue access point	H04W 12/12

H04L 63/16

{Implementing security features at a particular protocol layer}

Definition statement

This place covers:

Security solution is specific to a certain layer.

References

Informative references

Attention is drawn to the following places, which may be of interest for search:

Particular aspects of OSI layers in general	H04L 69/32

Special rules of classification

This entries provides additional information. The documents classified here will also have a subgroup in further appropriate network security subgroup or subgroups.

H04L 63/18

{using different networks or paths for security, e.g. using out of band channels (cryptographic mechanisms or cryptographic arrangements for key distribution involving distinctive intermediate devices or communication paths H04L 9/0827; cryptographic mechanisms or cryptographic arrangements for authentication using a plurality of channels H04L 9/3215)}

Definition statement

This place covers:

Network traffic is secured by transmitting information through different paths of networks are classified here.

Two examples are:

- placing an order over the internet and using a telephone to communicate credit card information,
- or using a password received via SMS to obtain access to a remote computer

References

Limiting references

This place does not cover:

Cryptographic mechanisms or cryptographic arrangements for authentication using a plurality of channels	H04L 9/3215

H04L 63/20

{for managing network security; network security policies in general (filtering policies H04L 63/0227)}

Definition statement

This place covers:

Management of network security or network security policies, e.g. managed services, deciding where to put firewalls, which data to encrypt, which authentication method to use, etc.

References

Informative references

Attention is drawn to the following places, which may be of interest for search:

Security of network management functions, e.g. restricting network management access	H04L 41/28
Negotiation of communication capabilities in general	H04L 69/24

Special rules of classification

Packet filtering policies H04L 63/0227 and subgroups.

The classification in combination with H04L 63/08, H04L 63/04, H04L 63/10 is given to documents involving the selection of a particular authentication or confidentiality methods or access privileges by negotiation, according to capabilities or policies.

H04L 63/205

{involving negotiation or determination of the one or more network security mechanisms to be used, e.g. by negotiation between the client and the server or between peers or by selection according to the capabilities of the entities involved (negotiation of communication capabilities H04L 69/24)}

Definition statement

This place covers:

Negotiation or determination between networking entities of the one or more network security algorithms to be used.

References

Limiting references

This place does not cover:

Negotiation of communication capabilities in general	H04L 69/24

H04L 63/30

{for supporting lawful interception, monitoring or retaining of communications or communication related information (circuit switched telephony call monitoring H04M 3/2281)}

Definition statement

This place covers:

Lawful interception; monitoring or retaining of communications or commnication related information

References

Informative references

Attention is drawn to the following places, which may be of interest for search:

Lawful interception of Plain Old Telephone Systems (POTS)	H04M 3/2281

Glossary of terms

In this place, the following terms or expressions are used with the meaning indicated:

Handover Interface	Lawful interception handover interface HI1, HI2, and HI3 to hand over warrant, intercept related information and communication content between service provider and lawful authorities

H04L 63/302

{gathering intelligence information for situation awareness or reconnaissance}

Definition statement

This place covers:

Gathering intelligence information for situation awareness or reconnaissance, tactical control or intelligence concepts.

H04L 63/304

{intercepting circuit switched data communications (lawful interception of wireless network communications H04W 12/02)}

References

Informative references

Attention is drawn to the following places, which may be of interest for search:

Lawful interception of wireless communication	H04W 12/02

H04L 65/00

{Network arrangements or protocols for real-time communications (computer conference H04L 12/1813; real time or near real time messaging in message switching systems, e.g. instant messaging H04L 12/581; television systems H04N 7/00; selective video distribution H04N 21/00; interconnection arrangements between switching centres for working between exchanges having different types of switching equipment where the types of switching equipment comprise PSTN/ISDN equipment and equipment of networks other than PSTN/ISDN H04M 7/1205; systems providing special services to telephonic subscribers H04M 3/42; network applications in general H04L 67/00)}

Definition statement

This place covers:

Only communications which fulfill the following two conditions:

- They are based on packet data;
- There is real-time or pseudo-real-time temporal association between source and destination, or source and network, or destination and network.
- Provided that the above two conditions are met, this group covers arrangements relating to:
- The transmission of the multimedia data itself,
- The user-to-user, user-to-network, inter-network or intra-network signalling supporting,
- The establishment of a session for the subsequent transmission of the multimedia data, or
- The maintenance of the session or
- The application services available to the user during the session (unless explicitly excluded in certain cases).

Relationships with other classification places

Generally H04L 65/00 has relationships with the following general areas: H04L 67/00, H04L 69/00, H04N 21/00, H04N 7/00, H04N 5/00, H04L 12/18, H04L 12/58, H04L 12/24, H04L 12/26, H04M, H04Q 11/00.

As already mentioned, Real Time Multimedia Communications within the context of H04L 65/00 cover communications which have the following two characteristics:

- Data Packet based;
- Real-time or pseudo-real-time temporal association between source and destination, or source and network or destination and network.

The above definition covers both the arrangements or protocols related to the transmission of the multimedia data itself, as well as the user-to-user or user-to-network signalling supporting the establishment of a session for the subsequent transmission of the multimedia data, the maintenance of the session and the application services available to the user during the session (unless explicitly excluded in certain cases). The above definition/limitation of the scope of H04L 65/00 must always be borne in mind in interpreting the relationship of H04L 65/00 with all other fields.

Excluded from the scope of H04L 65/00 are arrangements for multimodal data communications which do not have the above two characteristics.

Examples of what is excluded are (if not in combination with a communication arrangement covered by the above definition, as in e.g. combinational or collaboration systems):

- Non-real-time multimedia file transfer (H04L 67/06);
- Multimedia Store and Forward Messaging as in e-mail, MMS, etc. (H04L 12/58);

- Analogue multimedia streaming, e.g., in analogue television (H04N 5/00, H04N 7/00, H04N 21/00));
- Bit streaming (i.e. not packet) as in ISDN (**H04Q11/40**).

Relationship between H04L 65/00 and legacy telephony (H04M)

Specifically, the dividing line between legacy telephony covered by subclass H04M and packet-based multimedia telephony in its wider sense (i.e. both video and voice interactive communication between persons) covered by subgroup H04L 65/00 is defined as:

- Systems and arrangements in which the legacy non-packet-based core telephony network (circuit switched PSTN or ISDN) represents a major part, are covered by the appropriate H04M subclass entries;
- Systems and arrangements in which the legacy non-packet-based core telephony network (circuit switched PSTN or ISDN) represents a trivial or insignificant part or is totally absent, and the packet-based network (e.g. Internet, IMS) represents the only or the major and the most significant part are covered by the H04L 65/00;
- Signalling adaptation-interworking between SIP and SS7 is covered by H04M 7/00.

Examples of H04M - H04L 65/00 interface are:

- A CPE gateway or Terminal Adapter allowing a legacy user telephone device to connect to the packet-based network is covered by H04L 65/00;
- A signalling gateway interfacing two core networks, one legacy and one packet-based (e.g. SIP-SS7 gateway) is covered by H04M;
- A transparent IP pipe interconnecting two legacy circuit switched networks, with no details on the IP pipe itself, is normally covered by H04M;
- A transparent dial-up or leased circuit-switched line interconnecting two packet-based networks, with no details on the dial-up circuit-switched line itself, is normally covered by H04L 65/00;
- An IP-gateway allowing a call to be selectively branched off to either a legacy network or a packet-based network is normally covered by H04M. However, if no significant details of the legacy network aspects are discussed apart from it being mentioned as an alternative, the IP-gateway may be covered by H04L 65/00.

Further comments and explanations regarding the H04L 65/00 subgroup and its relations with other related classes:

In order to avoid confusion with classes of other neighbouring fields, whose definitions use wording similar to that used in this class, references to these fields will be mentioned with specific disclaimers if possible. In case a reference is unintentionally omitted, the above defined limitation in the scope of the H04L 65/00 subclass entries must always be borne in mind.

References

Limiting references

This place does not cover:

computer conference	H04L 12/1813
Multimedia store or forward messaging as in e-mail, MMS or the like	H04L 12/58
Instant messaging	H04L 12/581
network applications in general	H04L 67/00
Non-real-time multimedia file transfer	H04L 67/06
systems providing special services to telephonic subscribers	H04M 3/42

interconnection arrangements between switching centres for working between exchanges having different types of switching equipment where the types of switching equipment comprise PSTN/ISDN equipment and equipment of networks other than PSTN/ISDN	H04M 7/1205
Analogue multimedia streaming, as in analogue television systems	H04N 7/00, H04N 5/00, H04N 21/00
Bit streaming, i.e. not packet-based, as in ISDN	H04Q 11/04

Informative references

Attention is drawn to the following places, which may be of interest for search:

Data switching systems for broadcast or conference	H04L 12/18
Data network management	H04L 12/24
Data network testing or monitoring	H04L 12/26
Flow control	H04L 12/569
Message switching systems	H04L 12/58
Instant messaging	H04L 12/581
Arrangements for connecting between networks having differing types of switching systems	H04L 12/66
Arrangements for addressing or naming in data networks	H04L 61/00
Arrangements for network security	H04L 63/00
Network applications in general	H04L 67/00
WEB based applications	H04L 67/02
Adaptation for terminals and/or networks with limited resources or for terminal portability	H04L 67/04
Non-real-time multimedia file transfer	H04L 67/06
Terminal emulation	H04L 67/08
Arrangements to access one among a plurality of replicated servers, e.g. load balancing	H04L 67/1002
Arrangements for peer-to-peer networking in network applications	H04L 67/104
Non-real-time session management in network applications	H04L 67/14
Network application being adapted for the location of the user terminal	H04L 67/18
Arrangements for push based network services	H04L 67/26
Intermediate processing in the network with arrangements for data reduction or adaptation	H04L 67/2828
Terminal profiles	H04L 67/303
Arrangements for scheduling or organising the servicing of requests whereby quality of service or priority requirements are taken into account	H04L 67/322
Telewriting, virtual reality or network gaming	H04L 67/38
Protocols for data compression	H04L 69/04
Protocols for interworking or protocol conversion	H04L 69/08
Multichannel or multilink protocols	H04L 69/14
Header parsing or analysis	H04L 69/22

Negotiation of communication capabilities	H04L 69/24
Arrangements for broadcast or distribution combined with broadcast	H04H 20/00
Arrangements for broadcast applications with a direct linkage of broadcast information	H04H 60/00
Substation equipment for use by subscribers	H04M 1/00
Systems providing special services to telephonic subscribers	H04M 3/42
Circuit switched PBXs	H04M 3/42314
Arrangements for screening incoming telephone calls	H04M 3/436
Information services comprising voice	H04M 3/487
Contact center services	H04M 3/51
Telephonic conference systems	H04M 3/56
Services and arrangements where telephone services are combined with data services	H04M 7/0024
PBX networks	H04M 7/009
Interconnection arrangements between switching centres for working between exchanges having different types of switching equipment where the types of switching equipment comprise PSTN/ISDN equipment and equipment of networks other than PSTN/ISDN	H04M 7/1205
Decomposed PSTN/ISDN-IP gateways	H04M 7/1255
Television systems in general	H04N 5/00, H04N 7/00, H04N 21/00
Television conferencing systems	H04N 7/15
Television systems using two way working	H04N 7/173
Transmission of television signals using pulse code modulation	H04N 7/24
Selecting or control in telephonic networks	H04Q 3/00
Bit streaming, i.e. not packet-based, as in ISDN	H04Q 11/04
Wireless communication networks in general	H04W
Wireless location based services	H04W 4/02
Push-to-Talk services in wireless networks	H04W 4/025

Special rules of classification

The different entries and subentries of H04L 65/00 are not mutually exclusive. On the contrary, a document has to be normally assigned more than one classes. For instance, a document describing the SIP call setup for a distributed control conference, the conference at first being audio only and later adding video as well, will be assigned the classes: H04L 65/1006 (SIP), H04L 65/1069 (session setup), H04L 65/4046 (Distributed controlled conference) and H04L 65/1089 (Adding or removing media).

When an entry is further subdivided in subentries, documents which are relevant to the subentries should be classified directly in these subentries. Documents relevant to the parent entry but not to any of its subentries, should be classified in the parent entry, unless a subentry called "other" exists.

Glossary of terms

In this place, the following terms or expressions are used with the meaning indicated:

H.323	International Telecommunication Union Recommendation no. 323, series H, entitled "Packet-based multimedia communications systems"
IP	Internet Protocol
IMS	IP Multimedia Subsystem
ISDN	Integrated Services Digital Network
MGC	Media Gateway Control/Controller
MGCP	Media Gateway Control Protocol
MMS	Multimedia Messaging Service
PBX	Private Branch Exchange
PSTN	Public Switched Telephone Network
QoS	QoS means Quality of Service
RTP	Real Time Protocol
RTCP	Real Time Control Protocol
RTSP	Real Time Streaming Protocol
SIP	Session Initiation Protocol
SPAM	unsolicited electronic mail
SPIT	SPAM Prevention in IP Telephony

H04L 65/10

{Signalling, control or architecture (selecting or control in telephonic networks H04Q 3/00; data network management H04L 12/24; data network testing or monitoring H04L 12/26; admission control or resource reservation in packet switching networks H04L 12/5695; control signalling related to video distribution H04N 21/63)}

References

Limiting references

This place does not cover:

data network management	H04L 12/24
data network testing or monitoring	H04L 12/26
admission control or resource reservation in packet switching networks	H04L 12/5695
control signalling related to video distribution	H04N 21/63
selecting or control in telephonic networks	H04Q 3/00

Special rules of classification

This parent class is not used unless the document cannot be classified in any of its dependent subclasses.

H04L 65/1003

{Signalling or session protocols}

Definition statement

This place covers:

All packet-based signalling protocols for packet-based networks, current and future, although only SIP and H.323 families of protocols are explicitly identified at present. The SIP and H.323 families of protocols are classified in their specific dependent subclasses All non-SIP and non-H.323 protocols for signalling and session management are classified in this parent class. SIP and H.323 are classified in their dedicated dependent subclasses.

H04L 65/1006

{SIP}

Definition statement

This place covers:

IETF SIP family of protocols, including SDP, etc.

Also, for background information on the SIP standard, please check XP007915526. This is the annotated version of the standard that gives additional explanation.

H04L 65/1009

{H.323}

Definition statement

This place covers:

H.323 ITU family of protocols.

H04L 65/1013

{Network architectures, gateways, control or user entities}

Definition statement

This place covers:

Architectures and all entities, whether in the network or near and at the customer premises, identified at present as being part of packet-based multimedia systems and networks. Functionalities and services provided by these entities may also be classified in H04L 65/40-H04L 65/4092 and H04L 65/60 - H04L 65/608.

This parent class is only used if the document cannot be classified in any of its dependent subclasses.

H04L 65/1016

{IMS (wireless communication networks H04W)}

Definition statement

This place covers:

Repository of all IMS documents. Depending on its content an IMS related document which also describes an important entity service or functionality may also be classified in one of the other classes.

References

Limiting references

This place does not cover:

wireless communication networks	H04W

H04L 65/102

{Gateways (arrangements for connecting between networks having differing types of switching systems, e.g. gateways H04L 12/66)}

Definition statement

This place covers:

Gateway is an inter-working entity providing some degree of adaptation between otherwise incompatible entities or networks. An entity providing pure media manipulation (e.g. multiplexing of packets, media resolution optimisation, etc.) does not normally fall within this definition of a gateway. Such functionality is normally covered by H04L 65/60 - H04L 65/608. This parent class is only used if the document cannot be classified in any of its dependent subclasses.

H04L 65/1023

{Media gateways}

Definition statement

This place covers:

Gateways specifically providing media adaptation (e.g. codec incompatibility, analogue to packet voice or video, etc. If the document specifically identifies the position of the gateway within the network, then one of the following dependent classes must be given.

H04L 65/1026

{at the edge}

Definition statement

This place covers:

The media gateway is near or at the customer premises, e.g. a document describing the media adaptation functionalities of an ATA or a Residential Gateway.

H04L 65/103

{in the network}

Definition statement

This place covers:

The media gateway is within the core network.

H04L 65/1033

{Signalling gateways}

Definition statement

This place covers:

Gateways specifically providing signalling adaptation (e.g. SIP to H.323). Note: any adaptation to and from SS7 is covered by H04M 7/00. If the document specifically identifies the position of the gateway within the network, then one of the following dependent classes must be given.

H04L 65/1036

{at the edge}

Definition statement

This place covers:

The signalling gateway is near or at the customer premises, e.g. a document describing the signalling adaptation functionalities of an ATA or a Residential Gateway.

H04L 65/104

{at the edge}

Definition statement

This place covers:

The signalling gateway is within the core network.

H04L 65/1043

{MGC, MGCP or Megaco (decomposed PSTN/ISDN-IP gateways H04M 7/1255)}

Definition statement

This place covers:

MGCs using MCGP, Megaco, H.248, etc. The full MGCP-H.248-MEGACO family of protocols is covered by this class.

References

Limiting references

This place does not cover:

decomposed PSTN/ISDN-IP gateways	H04M 7/1255

H04L 65/1046

{Call controllers; Call servers}

Definition statement

This place covers:

All different Call Controlling entities providing e.g. resource reservation. Note that MGCs in particular are covered by the previous class.

H04L 65/105

{Proxies, e.g. SIP proxies}

Definition statement

This place covers:

Details of entities acting on behalf of the user agent, e.g. SIP proxies, P-CSCF in IMS etc.

H04L 65/1053

{Arrangements providing PBX functionality, e.g. IP PBX (circuit switched PBXs H04M 3/42314; PBX networks H04M 7/009)}

Definition statement

This place covers:

Entities providing IP PBX- Soft PBX functionality. However, the particular cases of IP PBX arrangements which may be distributed and provide effective local PBX service to users dispersed over multiple remotely located sites are covered by the following class.

References

Limiting references

This place does not cover:

Arrangements providing PBX functionality, e.g. IP PBX (circuit switched PBXs	H04M 3/42314
PBX networks	H04M 7/009

H04L 65/1056

{for multi-site}

Definition statement

This place covers:

IP PBX arrangements which may be distributed and provide effective local PBX service to users dispersed over multiple remotely located sites, e.g. corporate PBXs.

H04L 65/1059

{End-user terminal functionality (substation equipment for use by subscribers H04M 1/00; terminal profiles H04L 67/303; terminal emulation H04L 67/08; adaptation for terminals with limited resources or for terminal portability H04L 67/04; management of video client characteristics H04N 21/258, H04N 21/4516)}

Definition statement

This place covers:

Functionalities of the user terminal associated with the signalling and control of the multimedia session and the handling of the media. Note: constructional details and general features of a user terminal are normally covered by the H04M 1/00 class or other classes.

References

Limiting references

This place does not cover:

adaptation for terminals with limited resources or for terminal portability	H04L 67/04
terminal emulation	H04L 67/08
terminal profiles	H04L 67/303
substation equipment for use by subscribers	H04M 1/00
management of video client characteristics	H04N 21/258
management of video client characteristics	H04N 21/4516

H04L 65/1063

{Application servers (systems providing special services to telephonic subscribers H04M 3/42)}

Definition statement

This place covers:

Application server (AS) entities in the network, providing services to the end users. A document describing details of an application server as well as the services it provides, may also need to be classified in one of the subentries of H04L 65/40 - H04L 65/4092 or in the subentry for FEATURES H04L 65/1096.

References

Limiting references

This place does not cover:

systems providing special services to telephonic subscribers	H04M 3/42

H04L 65/1066

{Session control (conducting a computer conference, e.g. admission, detection, selection or grouping of participants, correlating users to one or more conference session or prioritising transmission H04L 12/1822; admission control/resource reservation in packet switching networks H04L 12/5695)}

Definition statement

This place covers:

All the signalling and procedures required for a multimedia session of any type (VoIP call, video call, streaming session, conference, etc.) to be prepared, set up, maintained and serviced. Normally this parent class is not used unless none of the subclasses below is suitable.

References

Limiting references

This place does not cover:

conducting a computer conference e.g. admission, detection, selection or grouping of participants, correlating users to one or more conference session or prioritising transmission	H04L 12/1822
admission control/resource reservation in packet switching networks	H04L 12/5695)

H04L 65/1069

{Setup (computer conference organisation arrangements, e.g. handling schedules, setting up parameters needed by nodes to attend a conference, booking network resources or notifying involved parties H04L 12/1818; session management in network applications H04L 67/14; arrangements for peer-to-peer networking in network applications H04L 67/104; negotiation of communication capabilities H04L 69/24; admission control or resource reservation in packet switching networks H04L 12/5695)}

Definition statement

This place covers:

The function of setting up a multimedia session irrespective of the type of the session, i.e. two-party multimedia telephony call, N-way multimedia telephony call, Conference call, etc.; e.g. a document describing a multiparty session setup should be assigned this entry and also at least one of the entries under H04L 65/403 - H04L 65/4053.

References

Limiting references

This place does not cover:

computer conference organisation arrangements, e.g. handling schedules, setting up parameters needed by nodes to attend a conference, booking network resources or notifying involved parties	H04L 12/1818
admission control or resource reservation in packet switching networks	H04L 12/5695
arrangements for peer-to-peer networking in network applications	H04L 67/104
session management in network applications	H04L 67/14
negotiation of communication capabilities	H04L 69/24

H04L 65/1073

{Registration (arrangements for addressing or naming in data networks H04L 61/00)}

Definition statement

This place covers:

The procedure of a user registering in a network. The registration includes all aspects of the end user i.e. addresses, aliases, capabilities, permissions, etc. Note: The details of the registrar directories and the procedures for consulting these directories are covered by H04L 61/00. A document describing

both the registration procedure itself and the structure of the directory should be classified both in this entry and in the appropriate H04L 61/00 subentry. This class also covers, re-registration, de-registration, maintaining or refreshing registrations, etc.

References

Limiting references

This place does not cover:

arrangements for addressing or naming in data networks	H04L 61/00

H04L 65/1076

{Screening (arrangements for screening incoming telephone calls H04M 3/436; arrangements for network security H04L 63/00)}

Definition statement

This place covers:

The procedure of admitting or rejecting a call or session setup request, either by the network or the destination. Note: Security-related call admission control is normally covered by the H04L 63/00 class, with the exception of SPIT mentioned below. Also, billing-related call admission control is normally covered by the H04L 12/14 and H04M 9/00 classes. Specifically SPIT is covered by the dedicated subclass below.

References

Limiting references

This place does not cover:

arrangements for network security	H04L 63/00
arrangements for screening incoming telephone calls	H04M 3/436

H04L 65/1079

{of unsolicited session attempts, e.g. SPIT (message switching systems, e.g. electronic mail systems, with filtering and selective blocking capabilities H04L 12/585)}

Definition statement

This place covers:

Call control specifically associated with the identification of SPAM VoIP calls.

References

Limiting references

This place does not cover:

message switching systems, e.g. electronic mail systems, with filtering and selective blocking capabilities	H04L 12/585

H04L 65/1083

{In-session procedures (computer conferences, network arrangements for conference optimisation or adaptation H04L 12/1827; reactions to resource unavailability in packet switching networks H04L 47/74; reallocation or renegotiation of resources in packet switching networks H04L 47/76)}

Definition statement

This place covers:

Procedures that take place during the session either with in-band or out-of-band signalling. Procedures related to "Session scope modification" are covered by the explicit subentries that follow. All the other procedures are covered by this entry, including aspects of session (or voice or service) continuity (VCC) and session recording. Session continuity within this scope of this entry covers aspects associated with the signalling at session layer level (SIP, IMS). Lower level session continuity, handoff or handover (including mobile IP level) is covered by H04W 36/0011 .

References

Limiting references

This place does not cover:

computer conferences, network arrangements for conference optimisation or adaptation	H04L 12/1827
reactions to resource unavailability in packet switching networks	H04L 47/74
reallocation or renegotiation of resources in packet switching networks	H04L 47/76

H04L 65/1086

{session scope modification}

Definition statement

This place covers:

Procedures that expand or contract the scope or some aspect of the session. If the expansion or contraction is related to adding or removing media or participants, the following explicit subentries apply. Other aspects (e.g. expanding the BW of the call) are covered by this subentry.

H04L 65/1089

{by adding or removing media}

Definition statement

This place covers:

Adding or removing a real time medium during the call; e.g. adding video to a voice only session.

H04L 65/1093

{by adding or removing participants}

Definition statement

This place covers:

Adding or removing a participant during the call; e.g. adding a 3rd participant to a 2-way call by using the SIP REFER method.

H04L 65/1096

{Features, e.g. call-forwarding or call hold (systems providing special services to telephonic subscribers H04M 3/42)}

Definition statement

This place covers:

Features are certain session-related services provided by the network operator that can be (pre)programmed by a subscriber. Examples of legacy features offered by legacy telephony network operators are: Call forwarding, Call hold, Follow-me, etc. Depending on the scope of the features and the network over which they are provided, these features may be covered by this entry or the H04M 3/00 classes. The following table clarifies the distinction between the two classes:

Legacy features provided over legacy type circuit switched networks	H04M 3/00
Legacy features provided over packet-based networks, but the document describes mainly the "user experience" of the legacy features with insignificant to no details of the signalling involved in the packet-based network.	H04M 3/00
Legacy features provided over packet-based networks and the document describes details of the "user experience" of the legacy features as well as details of the signalling involved in the packet-based network	H04M 3/00 and H04L 65/1096
Legacy features provided over packet-based networks and the document only concentrates on the details of the signalling involved in the packet-based network without any details of the "user-experience"	H04L 65/1096
New non-legacy features which could not be provided by legacy type networks and can only be offered by new packet-based networks	H04L 65/1096

References

Limiting references

This place does not cover:

systems providing special services to telephonic subscribers	H04M 3/42

H04L 65/40

{Services or applications (systems providing special services to telephonic subscribers H04M 3/42; contact center services H04M 3/51; information services comprising voice H04M 3/487; network service management for ensuring proper service fulfilment H04L 12/2464)}

Definition statement

This place covers:

Telephony services provided over legacy circuit switched networks are covered by the H04M 3/00 classes. Documents relating to telephony services provided over VoIP networks, are only covered by this entry if they relate to the VoIP signalling and protocols required for the provision of the services. Documents relating mainly to the “user experience” provided by the services, with little to no information on the VoIP signalling and protocols, are only covered by the H04M 3/00 classes. The following table clarifies the distinction between the two classes:

Services provided over legacy type circuit switched networks	H04M 3/00
Services provided over VoIP packet-based networks, but the document describes mainly the "user experience" of the information services with insignificant to no details of the signalling involved in the VoIP packet-based network	H04M 3/00
Information services provided over VoIP packet-based networks and the document describes details of the "user experience" of the information services as well as details of the signalling involved in the VoIP packet-based network	H04M 3/00 and H04L 65/40
Services provided over VoIP packet-based networks and the document only concentrates on the details of the signalling involved in the packet-based network without any details of the "user experience"	H04L 65/40

Note, aspects of WEB related information services are also covered by H04L 67/02 (e.g. click-to-dial from within a WEB a page).

This parent class is only used if none of the explicit dependent subclasses below is suitable.

References

Limiting references

This place does not cover:

network service management for ensuring proper service fulfilment	H04L 12/2464
systems providing special services to telephonic subscribers	H04M 3/42
information services comprising voice	H04M 3/487
contact center services	H04M 3/51

H04L 65/4007

{Services involving a main real-time session and one or more additional parallel sessions (real time messaging, e.g. instant messaging, interacting with other applications or services H04L 12/582; multichannel or multilink protocols H04L 69/14; services and arrangements where telephone services are combined with data services H04M 7/0024)}

Definition statement

This place covers:

During an existing interactive real-time session, another parallel session is initiated and/or maintained. This entry covers the signalling for the initiation and the maintenance for this additional session. Note: adding a medium in an existing session is not considered a parallel session. Note that this subclass is used only if none of the following two explicit children subclasses is suitable.

H04L 65/4015

{where at least one of the additional parallel sessions is real time or time sensitive, e.g. white board sharing, collaboration or spawning of a subconference (telewriting, virtual reality or network gaming H04L 67/38)}

Definition statement

This place covers:

This entry involves an additional parallel session which is time sensitive, e.g. the initiation of a parallel session for the streaming of a video clip or for a shared white board for distant learning, etc. Also the spawning of a sub-conference by a participant is also covered by this entry.

Note: the addition of a participant in an existing session is not considered a parallel session, if this new participant becomes a full member of the existing session. Note: Aspects of Tele-writing, Virtual Reality and Network Gaming are also covered by H04L 67/38.

References

Limiting references

This place does not cover:

telewriting, virtual reality or network gaming	H04L 67/38

H04L 65/4023

{where none of the additional parallel sessions is real time or time sensitive, e.g. downloading a file in a parallel FTP session, initiating an email or combinational services (file transfer H04L 67/06; WEB based applications H04L 67/02; message switching systems H04L 12/58; instant messaging H04L 12/581)}

Definition statement

This place covers:

This entry involves an additional parallel session which is not time sensitive, e.g. the initiation of a parallel session for a file transfer using FTP, the sending of an e-mail message, etc.

References

Limiting references

This place does not cover:

message switching systems	H04L 12/58
instant messaging	H04L 12/581
WEB based applications	H04L 67/02
file transfer	H04L 67/06

H04L 65/403

{Arrangements for multiparty communication, e.g. conference (television conferencing systems H04N 7/15; telephonic conference systems H04M 3/56; data switching systems for computer conference H04L 12/1813)}

Definition statement

This place covers:

The control and the signalling of a multi-party session. Multi-party sessions, in the context of this entry can be Conferences and N-way calls. The subentries of this class distinguish multiparty communication by the type of floor control used in the session.

It is noted that floor control is defined as the ability of an entity to control when participants are allowed to transmit and receive multimedia data. The ability of a participant to simply mute its own output or input does not by itself constitute floor control.

The following table clarifies the definitions of the different types of floor control in the context of this group:

Floor control	Type of multiparty session
None e.g. everyone can talk to everyone simultaneously or at will	Without floor control
By central entity e.g. Conference bridge or MCU	With central floor control
Always by the same end user terminal	With central floor control
Exchanged between end user terminals e.g. using a token	With distributed floor control

References

Limiting references

This place does not cover:

data switching systems for computer conference	H04L 12/1813
telephonic conference systems	H04M 3/56
television conferencing systems	H04N 7/15

Special rules of classification

A document describing both a multiparty session as well as details of services and applications covered by other entries, should be classified in the other entries also. For example, a document

describing setting up a multi party call using SIP, originally between 3 parties, the floor control being exercised by the originating participant with a 4th participant being added during the session, should be assigned the following groups: H04L 65/1006 (SIP), H04L 65/1069 (setup), H04L 65/4038 (conference centrally controlled) and H04L 65/1093 (adding a participant).

Note: The Conference entries of H04L 65/403 relate mainly to the signalling for the setting up, maintenance and the floor control of the Conference session. Other general aspects of the Conference, e.g. handling group membership, etc. are normally covered by the H04L 12/18 group.

Note that this parent group is used only if none of the following three explicit children subgroup is suitable.

H04L 65/4038

{with central floor control (data switching systems for conducting a computer conference, e.g. admission, detection, selection or grouping of participants H04L 12/1822)}

Definition statement

This place covers:

When the document explicitly describes a system/method with central floor control as defined above.

References

Limiting references

This place does not cover:

data switching systems for conducting a computer conference, e.g. admission, detection, selection or grouping of participants	H04L 12/1822

H04L 65/4046

{with distributed floor control}

Definition statement

This place covers:

When the document explicitly describes a system/method with distributed floor control as defined above.

H04L 65/4053

{without floor control}

Definition statement

This place covers:

When the document explicitly describes a system/method which has no floor control as defined above.

H04L 65/4061

{"Push-to-X" services (push-to-talk services in wireless networks H04W 4/10; connection management, e.g. connection set-up, manipulation or release for push-to-talk or push-on-call services in wireless communication networks H04W 76/005)}

Definition statement

This place covers:

Signalling involved to prepare and setup a "Push-To" half duplex one-to-one or one-to-many call. It covers all "Push-to" services like Push-to-Talk (PtT), Push-to-Video (PtV) etc. A document describing a PtT over IMS service should normally be assigned this entry and the H04L 65/1016 entry.

References

Limiting references

This place does not cover:

push-to-talk services in wireless networks	H04W 4/10
connection management, e.g. connection set-up, manipulation or release for push-to-talk or push-on-call services in wireless communication networks	H04W 76/005

H04L 65/4069

{Services related to one way streaming}

Definition statement

This place covers:

This entry covers services involving streaming of data from a source to a destination (downstream) and not vice-versa (upstream). It is noted that the notion of one-way streaming is not related to the actual ability of a terminal to also stream in the other direction, but only to the nature of the particular service. A document describing the broadcast streaming of media to terminals is normally covered by a H04L 65/4069 - H04L 65/4092 entry, even though the terminals may be capable to also stream media themselves to other destinations.

This parent class is only used if none of the following two children subclasses is suitable.

H04L 65/4076

{Multicast or broadcast (data switching systems for broadcast or conference H04L 12/18; analog television systems in general H04N 7/00; creating video channels for a dedicated end-user group H04N 21/2668; arrangements for broadcast or distribution combined with broadcast H04H 20/00; arrangements for broadcast applications with a direct linkage of broadcast information H04H 60/00; arrangements for push based network services H04L 67/26)}

Definition statement

This place covers:

Media is streamed in the downstream direction from a source to multiple destinations (e.g. from a head-end server to subscriber terminals). Applications that may be covered include DVB-IP, some aspects of WEBcasting, etc. Aspects that are covered by this entry involve the packet streaming

protocols, the packet-based signalling, the gatewaying etc. General aspects of TV broadcast are normally covered by H04N 7/00 classes. The general aspects of data multicasting and broadcasting are normally covered by the H04L 12/18 class.

References

Limiting references

This place does not cover:

data switching systems for broadcast or conference	H04L 12/18
arrangements for push based network services	H04L 67/26
arrangements for broadcast or distribution combined with broadcast	H04H 20/00
arrangements for broadcast applications with a direct linkage of broadcast information	H04H 60/00
analog television systems in general	H04N 7/00
creating video channels for a dedicated end-user group	H04N 21/2668

H04L 65/4084

{Content on demand (analog television systems using two way working H04N 7/173; end-user applications for requesting content, additional data or services H04N 21/472)}

Definition statement

This place covers:

Media is streamed in the downstream direction from a source to selected destinations which requested the media. (e.g. from a head-end server to subscriber terminals). Applications that may be covered include on demand video streaming, etc. Aspects that are covered by this entry involve the packet streaming protocols, the packet-based signalling, the gatewaying, the possible session setup etc. General aspects of TV are normally covered by H04N 7/00 classes.

References

Limiting references

This place does not cover:

analog television systems using two way working	H04N 7/173
end-user applications for requesting content, additional data or services	H04N 21/472

H04L 65/4092

{Control of source by destination, e.g. user controlling streaming rate of server (explicit feedback from the destination to the source to modify data rate for flow control or congestion control in packet switching networks, e.g. choke packet H04L 47/26; end-to-end flow control in packet switching networks H04L 47/18; analog television systems using two way working H04N 7/173; control signals to video servers issued by video clients H04N 21/6377)}

Definition statement

This place covers:

The subscriber terminal can control the way media is streamed by the source (e.g. streaming rate, pause, stop etc.). Applications that may be covered include VCR-like control of the source, etc. Aspects that are covered by this entry involve the packet protocols (e.g. RTSP), the packet-based signalling, the gatewaying, the possible session setup etc. General aspects of TV are normally covered by H04N 7/00 class.

References

Limiting references

This place does not cover:

end-to-end flow control in packet switching networks	H04L 47/18
explicit feedback from the destination to the source to modify data rate for flow control or congestion control in packet switching networks, e.g. choke packet	H04L 47/26
analog television systems using two way working	H04N 7/173
control signals to video servers issued by video clients	H04N 21/6377

H04L 65/60

{Media handling, encoding, streaming or conversion}

Definition statement

This place covers:

The manipulation, the handling and the transmission of the media content itself as opposed to the signalling associated with it. Note: the creation of the media content (e.g. converting the image information into digitalised MPEG frames, etc.) is covered by the H04N 7/00, H04N 21/00 and H04N 5/00 classes. This entry deals with encapsulation of the digitalised content into network packets, the network transport protocols governing the transmission of these content-carrying packets, and the processes involving the interaction of the content itself and the packets carrying this content with the network.

This parent class is only used if none of the explicit children subclasses below is suitable.

H04L 65/601

{Media manipulation, adaptation or conversion (transmission of television signals using pulse code modulation H04N 7/24; adaptation for terminals or networks with limited resources or for terminal portability H04L 67/04; involving interrnediate processing or storage in the network H04L 67/28; network application being adapted for the location of the user terminal H04L 67/18; computer conferences, network arrangements for conference optimisation or adaptation H04L 12/1827; message switching systems, e.g. electronic mail systems, with message adaptation based on network or terminal capabilities H04L 12/5825; flow control or congestion control in packet switching networks H04L 12/569)}

Definition statement

This place covers:

Manipulating, converting and adapting the content, in support of its transition through the network: e.g. Selecting a different codec for BW saving or for matching to the capabilities of the terminal, dropping a medium for BW saving or for matching to the capabilities of the terminal, selecting or switching to a lower resolution version of the content for BW saving, etc. Normally this subclass is not used, but one of the following three subentries is used depending on where the media manipulation takes place.

References

Limiting references

This place does not cover:

computer conferences, network arrangements for conference optimisation or adaptation	H04L 12/1827
flow control or congestion control in packet switching networks	H04L 12/569)
message switching systems, e.g. electronic mail systems, with message adaptation based on network or terminal capabilities	H04L 12/5825
adaptation for terminals or networks with limited resources or for terminal portability	H04L 67/04
network application being adapted for the location of the user terminal	H04L 67/18
involving intermediate processing or storage in the network	H04L 67/28
transmission of television signals using pulse code modulation	H04N 7/24

H04L 65/602

{at the source (reformatting of video signals in video distribution servers H04N 21/2343; reformatting of additional data in video distribution servers H04N 21/2355)}

Definition statement

This place covers:

The content handling takes place at the source.

References

Limiting references

This place does not cover:

reformatting of video signals in video distribution servers	H04N 21/2343
reformatting of additional data in video distribution servers	H04N 21/2355

H04L 65/604

{at the destination (reformatting of video signals in video clients H04N 21/4402; reformatting of additional data in video clients H04N 21/4355)}

Definition statement

This place covers:

The content handling takes place at the destination.

References

Limiting references

This place does not cover:

reformatting of additional data in video clients	H04N 21/4355
reformatting of video signals in video clients	H04N 21/4402

H04L 65/605

{intermediate}

Definition statement

This place covers:

The content handling takes place at an intermediate node in the network.

H04L 65/607

{Stream encoding details (interfacing the downstream path of a video distribution network H04N 21/238, H04N 21/438; controlling the complexity of a video stream H04N 21/2662, H04N 21/4621, H04N 21/64792; protocols for data compression H04L 69/04; header parsing or analysis H04L 69/22)}

Definition statement

This place covers:

Details of the encoding of the packet streams; e.g. the encapsulation of MPEG transports into RTP packets, multiplexing of RTP/UDP packets, RTP packet header compression (may also be covered by H04L 69/04), RTP header extensions, piggy-bagging executable code in the content carrying packets, etc. Note that the encoding of the media data itself (i.e. voice coding or image coding in MPEG) is not covered by H04L 65/00 but by H04N 7/00, H04N 21/00, H04N 5/00.

References

Limiting references

This place does not cover:

protocols for data compression	H04L 69/04
header parsing or analysis	H04L 69/22
interfacing the downstream path of a video distribution network	H04N 21/238, H04N 21/438
controlling the complexity of a video stream	H04N 21/2662, H04N 21/4621, H04N 21/64792

H04L 65/608

{Streaming protocols, e.g. RTP or RTCP}

Definition statement

This place covers:

All the protocols dedicated to the transmission and the control of the transmission of real time streaming content, including the full IETF RTP family of protocols (RTP, RTCP, RTSP).

Note: an RTP packet header extension, with details of the encoding of the header, may be classified both in H04L 65/607 and H04L 65/608.

H04L 65/80

{QoS aspects (traffic-type related flow control in packet switching networks, e.g. priorities or QoS H04L 47/24; admission control/resource reservation in packet switching networks based on QoS or priority awareness H04L 47/805, monitoring arrangements, testing arrangements, with monitoring of QoS metrics H04L 12/2634; arrangements for scheduling or organising the servicing of requests whereby quality of service or priority requirements are taken into account H04L 67/322; network service management, ensuring proper service fulfillment according to an agreement or contract between two parties, e.g. between an IT-provider and a customer H04L 12/2464; adaptation for terminals or networks with limited resources, or for terminal portability H04L 67/04; reducing the amount or size of exchanged application data H04L 67/2828; network application adapted for the location of the user terminal H04L 67/18; monitoring of the downstream path of a video distribution network H04N 21/2402, H04N 21/44209)}

Definition statement

This place covers:

Quality of Service, QoS, aspects related to real time Multimedia Communication in the context of H04L 65/00.

Documents classified into this group relate to specific QoS issues, irrespective as to whether these issues apply to a service, signalling, an entity, an application, etc. or to techniques which intend to support an improved user experience. The group is meant to be assigned as a qualifier to documents which may or may not have been assigned one of the other entries under H04L 65/00. As an example,

a document describing the setting up of an audio and video call, and where during the call the available BW is continuously monitored and at a critical moment the video medium is dropped in order to preserve bandwidth, should be assigned the following entries:

H04L 65/1069 (Call setup), H04L 65/1089 (removing a medium) and H04L 65/80 (QoS).

The following aspects in real-time communication are considered examples falling under QoS:

Note that some of these techniques are known from other fields (e.g. monitoring (H04L 12/26), load balancing (H04L 67/1002), etc.) and are often also classified there. However if the technique is specifically adapted to real-time multimedia communication it is also classified here. Where applicable, the other fields are indicated below and are useful when searching for particular techniques.

- Content support streams

QoS technique whereby one or more additional and separate support streams to a content stream is/ are transmitted in parallel, providing for an improved user experience.

- Buffering techniques (see also flow control H04L 12/569)

Techniques relating to buffer management in sender, receiver or intermediate node used in order to compensate for network deficiencies such as delay, jitter, etc.

- Alternate path routing (see also H04L 45/22)

Techniques whereby during the streaming of content the stream is rerouted via an alternate path through the network when network problems such as congestion appear.

- Server arrangements

Arrangements and techniques at the server side for improving the QoS in real-time or near real-time services.

- Network infrastructure

Arrangements and techniques in the network, in terms of special network infrastructure entities, for improving the QoS in real-time or near real-time services.

- Redundant media transmission

Transmission of a redundant separate content stream in parallel, possibly using a different codec over a possibly alternate route in order to improve the reliability of the content delivery to the client; the redundant content streams cannot be added together.

- Multiple stream components

Content is streamed to a client using different sub-streams (sub layers) whereby one (bas layer) - or each separate sub-stream (sub-layer) on its own allows for playback of the content and whereby multiple sub-streams (sub-layers) can be added together and provide for an improved quality of the playback.

- Load balancing arrangements (see also H04L 67/1002)

Arrangements for load balancing in order to offload a server or a part of the network.

- Multiple Channel transmission (also in H04W)

Content stream is spread (dynamically) over multiple channels in a usually wireless access.

- Adaptive coding (see also H04L 47/38)

The coding of the content stream is adjusted in real-time depending on the conditions of the network, the bandwidth availability or the client/server device.

- Alternate coding

Switching between different versions of the content depending on the conditions of the network, the bandwidth availability or the client/server device; whereby the different versions exist prior to the content transmission

- Content provider selection

Near real-time content provider selection for allowing optimal QoS experience.

- Adaptive rate selection

Dynamic transmission rate selection depending on the conditions of the network, the bandwidth availability or the client/server device, covers for example subsampling and upsampling.

- Scheduling

Near real-time techniques for timing the start of the transmission or playout of a stream depending on the conditions of the network, the bandwidth availability or the client/server device.

- Server resource optimisation

Improvements and techniques allowing for increased server side performance.

- Reducing required client resources

Improvements and techniques allowing for increased client side performance.

- Network bandwidth reduction

Improvements and techniques allowing for reduced network demand in terms of bandwidth.

- Measurement techniques (see also H04L 12/26)

Specific real-time measurement techniques supportive of QoS arrangements for multimedia communications.

- Timing and synchronisation techniques

Techniques for synchronization between different streams relating to a unique content experience and between different playback entities. Covers also solutions where timing issues are important.

- De-jittering (see also H04L 47/283)

QoS aspects tackling jitter in particular.

References

Limiting references

This place does not cover:

network service management, ensuring proper service fulfillment according to an agreement or contract between two parties, e.g. between an IT-provider and a customer	H04L 12/2464
monitoring arrangements, testing arrangements, with monitoring of QoS metrics	H04L 12/2634
traffic-type related flow control in packet switching networks, e.g. priorities or QoS	H04L 47/24
admission control/resource reservation in packet switching networks based on QoS or priority awareness	H04L 47/805
adaptation for terminals or networks with limited resources, or for terminal portability	H04L 67/04
network application adapted for the location of the user terminal	H04L 67/18
reducing the amount or size of exchanged application data	H04L 67/2828
arrangements for scheduling or organising the servicing of requests whereby quality of service or priority requirements are taken into account	H04L 67/322
monitoring of the downstream path of a video distribution network	H04N 21/2402, H04N 21/44209

H04L 67/00

{Network-specific arrangements or communication protocols supporting networked applications (message switching systems H04L 51/00; network management protocols H04L 41/00; routing or path finding of packets in data switching networks H04L 45/00; protocols for real-time multimedia communication H04L 65/00; information retrieval G06F 17/30; services or facilities specially adapted for wireless communication networks H04W 4/00; network structures or processes for video distribution between server and client or between remote clients H04N 21/00; exchange systems providing special services or facilities to subscribers involving telephonic communications H04M 3/42; distributed information systems G06F 9/00, G06F 17/00; lower layer network functionalities which support application layer provisions H04L 12/00)}

References

Limiting references

This place does not cover:

lower layer network functionalities which support application layer provisions	H04L 12/00
network management protocols	H04L 41/00
routing or path finding of packets in data switching networks	H04L 45/00
message switching systems	H04L 51/00
protocols for real-time multimedia communication	H04L 65/00
distributed information systems	G06F 9/00, G06F 17/00
information retrieval	G06F 17/30
exchange systems providing special services or facilities to subscribers involving telephonic communications	H04M 3/42
network structures or processes for video distribution between server and client or between remote clients	H04N 21/00
services or facilities specially adapted for wireless communication networks	H04W 4/00

H04L 67/10

{in which an application is distributed across nodes in the network (multiprogramming arrangements G06F 9/46)}

Definition statement

This place covers:

The distribution of computing activities (distributed computing) in a network, when the networking aspects are relevant.

Sending active messages (i.e. e-mail messages that contain not only data or text, but also active components like executables, sometimes being those executables the ones that take responsibility for routing the message in the network, i.e. finding the nodes in which to execute).

Distributing the execution of an algorithm between nodes in the network, i.e. executing one version of the algorithm in a server, another in a light-weight client, and comparing/sharing the results.

References

Limiting references

This place does not cover:

in which an application is distributed across nodes in the network (multiprogramming arrangements	G06F 9/46

Informative references

Attention is drawn to the following places, which may be of interest for search:

Routing aspects of active messages, active routing, active networks	H04L 45/566
Routing of messages based on application data	H04L 67/327
Networking aspects of remote procedure calls	**H04L69/20**
Task transfer, task migration, mobile agents	G06F 9/4856
Intertask communication	G06F 9/54
Remote procedure calls	G06F 9/547
Provisions for intelligent networking	H04Q 3/0029

H04L 67/1002

{for accessing one among a plurality of replicated servers, e.g. load balancing (arrangements or protocols for peer-to-peer networking H04L 67/104; protocols for client-server architectures H04L 67/42; allocation of processing resources to service requests in a distributed system G06F 9/5027; rebalancing the processing load in a distributed system G06F 9/5083; wireless network traffic load balancing H04W 28/08; network load balancing, traffic engineering H04L 47/125; video servers using load balancing strategies H04N 21/23103; error detection or correction of the data by redundancy in hardware G06F 11/16)}

Definition statement

This place covers:

Documents involving a client-server (or peer-to-peer) communication in which, based on specific criteria, a decision is taken, either in the network or in the client, for selecting one of a plurality of replicated servers (or peers acting as servers) to provide a specific resource. The plurality of replicated servers are characterized by being able to provide basically the same content or service.

This definition is not limited to an interpretation of the term "server" as "content server", but also comprises the load balancing to other types of network elements such as caches or firewalls, under the condition that these elements can be seen as end points of a client connection (this excludes routers, gateways, switches, wireless switches, etc.).

Documents in this group are consequently characterised by two main aspects: Firstly a plurality of replicated servers and secondly a selection among the plurality of replicated servers.

References

Limiting references

This place does not cover:

Selection among a plurality of network devices that are routing or forwarding devices and not end points for the communication (this includes AP-Access Points, gateways, LNS-L2TP Network servers, Home Agents, MAP-Mobile Anchor Points)	H04L 12/2856, H04L 47/125, H04W 28/08, H04W 28/08
Link or network selection, i.e. routing, based on load balancing in core network without involving a selection of a server among a plurality of replicated servers	H04L 12/5689
Load balancing between the outbound interfaces (NICs) in a network device	H04L 47/125
DNS resolutions when a plurality of DNS servers are involved but these are not replicated servers	H04L 61/20
Authentication processes when a plurality of authentication servers are involved but these are not replicated servers	H04L 63/08
Arrangements for mirroring or replication of data	H04L 67/1095
Redirection of requests when the plurality of servers are not replicated servers, and are therefore not meant to provide the same content or service	H04L 67/28
Routing according to the context/content of the requests when, if there is a plurality of servers, these are not replicated servers	H04L 67/32
QoS and priority requirements taken into account in the scheduling (or organisation or prioritization) of requests prior to the forwarding or routing of the request to a server	H04L 67/322
Multichannel or multilink protocols. Load balancing between the outbound interfaces (NICs) in a network device	H04L 69/14
Selection of a printer among a plurality	G06F 3/1296
Allocation of resources to service a request, the resource being a machine, e.g. a server	G06F 9/5027
Allocation of resources, i.e. techniques for rebalancing the load in a distributed system	G06F 9/5083

Special rules of classification

The architectural aspects of applications related to selection of a server among a plurality of replicated servers are classified in the architectural subgroups of the intermediate processing group H04L 67/28

Documents with the following additional aspects should be classified not only with their specific "selection among a plurality of servers" aspects but also in the following other groups:

- Monitoring and management of servers or networks: H04L 12/24, H04L 12/26
- Selection of an ISP through which a selected server among a plurality can be reached: H04L 12/2856
- Selection of network access among a plurality of available networks (PSTN, WLAN, ADSL, etc.) when a server among a plurality is also selected: H04L 12/5691
- Load balancing of DNS requests to a plurality of DNS servers when the load balancing is the main aspect of the application: H04L 61/20
- Load balancing of requests between a plurality of security devices such as firewalls, IDSs, SSL offload devices, etc. : H04L 63/00

- Load balancing of requests between a plurality of peers in a peer-to-peer network: H04L 67/104
- Load balancing of requests to servers that are part of a SAN: H04L 67/1097
- Session management: H04L 67/14
- Architectural implementation aspects of the load balancing intermediate functionality: H04L 67/28
- Failure recovery or redundancy of servers, where a backup server is selected among a plurality in case of failure of another server: H04L 69/40

H04L 67/1004

{Server selection in load balancing}

Definition statement

This place covers:

Documents where the invention is characterised by the criteria for selection of a server out of multiple servers with replicated content.

References

Limiting references

This place does not cover:

Allocation of processing resources to service a request in a distributed system, the resource being a machine, e.g. a server	G06F 9/5027

H04L 67/1006

{with static server selection, e.g. the same server being selected for a specific client (allocation of processing resources considering data affinity G06F 9/5033)}

Definition statement

This place covers:

Criteria for selection of a server are based on static selection. The same server is always selected for a specific client, independently of load changes (for example based on client's IP address).

References

Limiting references

This place does not cover:

Allocation of processing resources to service a request, considering data affinity	G06F 9/5033

H04L 67/1008

{based on parameters of servers, e.g. available memory or workload (allocation of processing resources to a machine considering the load G06F 9/505)}

Definition statement

This place covers:

Criteria for selection of a server are based on parameters of the plurality of servers (selection of server with least connections, more memory available, response time, least recently used, current workload, queue length, processing delay, power consumption, etc.).

References

Limiting references

This place does not cover:

Allocation of processing resources to service a request, considering the load	G06F 9/505

H04L 67/101

{based on network conditions}

Definition statement

This place covers:

Criteria for selection of a server are based on network conditions (access network load, bandwidth, network topology, least hops, round-trip delay, latency, etc.).

H04L 67/1012

{based on compliance of requirements or conditions with available server resources}

Definition statement

This place covers:

Criteria for selection of a server are based on compliance between predetermined requirements or conditions (either indicated in the client request or not, or in the form of thresholds) and the server's resources available (client's process requiring a percentage of memory, data rate, server capabilities, etc.).

H04L 67/1014

{based on the content of a request}

Definition statement

This place covers:

Criteria for selection of a server are based on the content of a request (URL, client selects criteria and sends a request, host information).

H04L 67/1017

{based on a round robin mechanism}

Definition statement

This place covers:

Criteria for selection of a server are based on round-robin (circular or rotational) distribution of requests.

H04L 67/1019

{based on random server selection}

Definition statement

This place covers:

Criteria for selection of a server are based on random or heuristic selection.

H04L 67/1021

{based on client or server locations}

Definition statement

This place covers:

Criteria for selection of a server are based on the location of the client or the server or the distance between client and server. It does not include the case of mathematical algorithms being used to calculate a number of hops (this belongs to network conditions).

References

Limiting references

This place does not cover:

Server selection based on network conditions	H04L 67/101

H04L 67/1023

{based on other criteria, e.g. hash applied to IP address, specific algorithms or cost}

Definition statement

This place covers:

Criteria for selection of a server are other criteria, e.g. hash applied to IP address, specific algorithms, cost, etc.

H04L 67/1025

{dynamic adaptation of the criteria on which the server selection is based}

Definition statement

This place covers:

Dynamic adaptation of the selection criteria in load balancers. In order to adapt to changes in the network / server conditions, the criteria for selection of a server among the plurality of servers are changed for other criteria (e.g. from static selection to a load-based criteria) or the criteria's algorithm is modified.

H04L 67/1027

{Persistence of sessions during load balancing}

Definition statement

This place covers:

Persistence means how to ensure that subsequent packets of a session or subsequent sessions established between a client and a server are forwarded to the same server as was the initial request (based on cookies, address affinity, etc.). This ensures consistency of information in the server, utility of client state information in the server, etc.

H04L 67/1029

{using data related to the state of servers by a load balancer (server selection based on server parameters H04L 67/1008; performance measurement for load balancing G06F 11/3433; information retrieval in structured data stores G06F 17/30286)}

Definition statement

This place covers:

Collection and organisation of information related to the states of the plurality of servers by the load balancer wherein the information can be used in a later stage for selection of a server among the plurality.

References

Limiting references

This place does not cover:

server selection based on server parameters	H04L 67/1008
performance measurement for load balancing	G06F 11/3433
information retrieval in structured data stores	G06F 17/30286)

H04L 67/1031

{Controlling of the operation of servers by a load balancer, e.g. adding or removing servers that serve requests}

Definition statement

This place covers:

Management of replicated servers. By controlling operations of servers, e.g. adding or removing servers from the plurality of servers available for answering requests, the resources available to the clients can be controlled and a better performance can be achieved.

H04L 67/1034

{Reaction to server failures by a load balancer (techniques for recovering from a failure of a protocol instance or entity H04L 69/40; departure or maintenance mechanisms in Peer-to-Peer networks H04L 67/1048; intermediate processing providing operational support to end devices by emulation or by off-loading in the network H04L 67/2861; network fault restoration H04L 12/2422; error detection or correction of the data by redundancy in hardware G06F 11/16; failing over workload from one server to another one G06F 11/202)}

Definition statement

This place covers:

Continuity of service. Active monitoring of servers to react in case of failure of a server by balancing current requests and forwarding new requests to another available servers.

References

Limiting references

This place does not cover:

Network fault restoration	H04L 12/2422
error detection or correction of the data by redundancy in hardware	G06F 11/16
failing over workload from one server to another one	G06F 11/202)

Informative references

Attention is drawn to the following places, which may be of interest for search:

Departure and maintenance mechanisms in Peer-to-Peer networks	H04L 67/1048
Intermediate processing of operational support to end devices when they are unavailable	H04L 67/28
intermediate processing providing operational support to end devices by emulation or by off-loading in the network	H04L 67/2861
Techniques for recovering from a failure of a protocol instance or entity	H04L 69/40

H04L 67/1036

{Load balancing of requests to servers for services different from user content provisioning, e.g. load balancing to DNS servers or firewalls (internet service provider selection H04L 12/5691)}

Definition statement

This place covers:

Load balancing of requests to replicated services for services different from user content provisioning, e.g. replicated DNS servers, replicated AAA servers, load balancing of firewalls, etc.

References

Limiting references

This place does not cover:

Ingress point selection, Internet Service Provider [ISP] selection	H04L 12/5691

Informative references

Attention is drawn to the following places, which may be of interest for search:

Domain Name Service DNS arrangements	H04L 61/20
Firewalls	H04L 63/02

H04L 67/1038

{Load balancing arrangements to avoid a single path through a load balancer}

Definition statement

This place covers:

Arrangements to avoid the use of a single path through an intermediate load balancer for requests and/or replies between a client and a server, e.g., the load balancer selects a server among a plurality and communicates the selection to the client that can use this information to contact the server directly, or the load balancer provides a list of servers to the client that will then select one.

H04L 67/104

{for peer-to-peer [P2P] networking; Functionalities or architectural details of P2P networks (file transfer, upload, download H04L 67/06; accessing replicated servers H04L 67/1002; presence management H04L 67/24; scheduling provisions H04L 67/32; real-time communications H04L 65/00; information retrieval using distributed database systems G06F 17/30283; small scale hierarchical wireless network topologies H04W 84/10; wireless interfaces between terminal devices H04W 92/18; P2P connections between video clients H04N 21/632; P2P connections between video game machines A63F 13/34)}

Definition statement

This place covers:

Documents describing specific functionalities, architectural details or applications of Peer to Peer (P2P) networks.

P2P networks are those which exhibit the following two characteristics:

- Symmetric Communication: Peer nodes act both as clients and as servers ("Servents"). Peer nodes are considered equals; they both request and offer resources, rather than being confined to either client or server roles.
- Self-Organization: The peer nodes automatically organize themselves into an application layer overlay network and adapt to the arrival, departure and failure of nodes.

Note: The academic definition feature "distributed control" is not considered because of the existence of P2P networks which make use of a node /some nodes which centralize certain functions in the p2p network (e.g. the central server of Napster; the "tracker nodes" of BitTorrent - on a "file per file" basis).

Relationships with other classification places

In relation with the note to the definition above, some degree of distributed arrangement of data is required by the hierarchy of the class under H04L 67/10.

Moreover its hierarchy under H04L 67/00 requires that it must involve the higher application layers (i.e. layers 5-7 of the OSI model).

References

Limiting references

This place does not cover:

Distributed Sensor Networks unless sensor nodes are clearly meant to both provide and request sensor data to/from another sensor node.	H04L 67/12
Proposals where nodes are able to both request and provide contents but there is actually not direct exchange of data among the nodes (e.g. if exchange of data is performed always via uploading and downloading to/ from a central server).	H04L 67/28
Peer-to-peer connections between video game machines.	A63F 13/34
Distribution of tasks among a plurality of processors inside a multiprocessor computer.	G06F 9/5027
Information search/organisation/retrieval where the proposal relates mainly to managed objects as cognitive information units rather than as physical peer nodes (e.g. keywords based search, contents oriented indexing instead of peers oriented indexing).	G06F 17/30
Peer-to-peer connections between video clients.	H04N 21/632
Mere establishment of point-to-point connections or content sharing mechanisms between two devices (point to point connections; sometimes referred to as peer-to- peer connections) without relevance of group organisation (i.e. as overlay network) aspect (e.g. merely within radio coverage criteria or based on profile matching between two device users).	H04W 76/023
Small Scale hierarchical wireless network topologies.	H04W 84/10
Wireless Ad-hoc Networks involving group organisation only at OSI Layer 3 or lower (i.e. network routing).	H04W 84/18
Wireless interfaces between video clients.	H04W 92/18

Informative references

Attention is drawn to the following places, which may be of interest for search:

Applications for Multicasting.	H04L 12/18

Applications for Instant Messaging.	H04L 12/581
Route fault recovery in network routing	H04L 45/28
Addressing aspects.	H04L 61/00
Applications for distributed directory services.	H04L 61/20
Security, e.g. countermeasures to security attacks, access control, authentication mechanisms.	H04L 63/00
Applications for Streaming Media.	H04L 65/00
SIP.	H04L 65/1006
Real-time terminal functionality.	H04L 65/1059
Real-time session setup.	H04L 65/1069
Real-time session control registration.	H04L 65/1073
One way streaming on demand.	H04L 65/4069
QoS aspects of Multimedia.	H04L 65/80
Applications/Protocols for File Transmission.	H04L 67/06
Applications for Distributed processing.	H04L 67/10
Mechanisms to access one among a plurality of peers with the same content (i.e. selection) in a peer-to-peer network.	H04L 67/1002
Reactions to failures of replicated servers by a load balancer	H04L 67/1034
Permanent content data storage at distributed nodes, e.g. replication, mirroring or in a storage area network.	H04L 67/1095, H04L 67/1097
Applications for sensor networks.	H04L 67/12
Presence management.	H04L 67/24
Push based mechanisms.	H04L 67/26
Temporary content data storage at intermediate nodes.	H04L 67/28
Intermediate processing of operational support to end devices when they are unavailable	H04L 67/2861
Scheduling (e.g. ordering) of responses to requests from different peers according to prioritising criteria.	H04L 67/322
Techniques for recovering from a failure of a protocol instance or entity, e.g. failover routines, service redundancy protocols, protocol state redundancy, protocol service redirection in case of a failure, disaster recovery	H04L 69/40
Applications for games.	A63F 2300/408
Data backup, redundancy and recovery functionalities.	G06F 11/1402
Applications for IP Telephony.	H04M 7/006
Applications for wireless peers.	H04W 4/00, H04L 67/04

Glossary of terms

In this place, the following terms or expressions are used with the meaning indicated:

BitTorrent	P2P protocol for file distribution. Defined by The BitTorrent Protocol Specification (http://www.bittorrent.org/beps/bep_0003.html).

Distributed hash table (DHT)	Decentralized distributed system that provides a lookup service similar to a hash table; (key, value) pairs are stored in a DHT, and any participating node can efficiently retrieve the value associated with a given key. Responsibility for maintaining the mapping from keys to values is distributed among the nodes, in such a way that a change in the set of participants causes a minimal amount of disruption.
Chunk	Fragments or pieces of information which are downloaded or managed by P2P programs.
Leech	Primarily leech (or leeches) refer to a peer (or peers) who has a negative effect on the swarm by having a very poor share ratio (downloading much more than they upload, creating a ratio less than 1.0). Most leeches are users on asymmetric internet connections and do not leave their BitTorrent client open to seed the file after their download has completed. The often used second meaning of leech is synonymous with downloader: used simply to describe a peer or any client that does not have 100% of the data. This alternative meaning was mainly introduced by most BitTorrent tracker sites.
Overlay network	Computer network built on top of another network. Nodes in the overlay can be thought of as being connected by virtual or logical links, each of which corresponds to a path, perhaps through many physical links, in the underlying network.
P2P	Peer to Peer.
Peer	A participant of a peer to peer network, in which participants act as both client and server. In BitTorrent, a peer is one instance of a BitTorrent client running on a computer on the Internet to which other clients connect and transfer data. Usually a peer does not have the complete file, but only parts of it. However, in the colloquial definition, "peer" can be used to refer to any participant in a swarm (in this case, it's synonymous with "client").
Peer to Peer network	Those networks which exhibit the following two characteristics: 1.- Symmetric Communication: Peer nodes act both as clients and as servers ("Servents"). Peer nodes are considered equals; they both request and offer resources, rather than being confined to either client or server roles. 2.- Self-Organization: The peer nodes automatically organize themselves into an application layer overlay network and adapt to the arrival, departure and failure of nodes.
Seed / Seeder:	Peer that offers a piece of content for upload. In BitTorrent, a Seed is used to refer to a peer who has 100% of the data. When a leech obtains 100% of the data, that peer automatically becomes a Seed.
Seeding:	Uploading content to other peers. In BitTorrent, Seeding refers to leaving a peer's connection available for other peers, i.e. leechers, to download from. Normally, a peer should seed more data than leech. However, whether to seed or not, or how much to seed, is dependent on the availability of leeches and the choice of the peer at the seeding end.
Swarm	Group of peers downloading file pieces, in parallel, from several distinct sources or uploaders of the file. In BitTorrent, together, all peers (including seeders) sharing a torrent are called a swarm. For example, six ordinary peers and two seeders make a swarm of eight.

Torrent	A torrent can mean either a .torrent metadata file (see next) or all files described by it, depending on context. Torrents work by dividing the target file into small information chunks, found on an unlimited number of different hosts. Through this method, torrents are able to download large files quickly. When a client (the recipient of a target file) has initiated a torrent download, the chunks of target file that are needed can be found easily, based on the data from the torrent itself. Once all the chunks are downloaded the client can assemble them into a usable form.
Torrent file	A BitTorrent tracker is a server that assists in the communication between peers using the BitTorrent protocol. Clients that have already begun downloading also communicate with the tracker periodically to negotiate with newer peers and provide statistics; however, after the initial reception of peer data, peer communication can continue without a tracker. A tracker should be differentiated from a BitTorrent index by the fact that it does not necessarily list files that are being tracked. A BitTorrent index is a list of .torrent files, usually including descriptions and other information. Trackers merely coordinate communication between peers attempting to download the payload of the torrents. Many BitTorrent websites act as both tracker and index. Sites such as these publicize the tracker's URL and allow users to upload torrents to the index with the tracker's URL embedded in them, providing all the features necessary to initiate a download.

H04L 67/1042

{involving topology management mechanisms}

Definition statement

This place covers:

Documents dealing with organisational aspects among peers that normally are established independently (although as a base) to the operations of specific resource search, selection and delivery covered in the other main groups.

H04L 67/1044

{Group management mechanisms (user group management in wireless communication networks H04W 4/08; management of multicast group membership H04L 12/185; reconfiguring of node membership in a computing system to eliminate errors G06F 11/1425)}

Definition statement

This place covers:

Documents dealing with group formation and internal organisation mechanisms/rules.

References

Limiting references

This place does not cover:

management of multicast group membership	H04L 12/185

reconfiguring of node membership in a computing system to eliminate errors	G06F 11/1425
user group management in wireless communication networks	H04W 4/08

H04L 67/1046

{Joining mechanisms}

Definition statement

This place covers:

Documents where a new peer wants to join an existing group. Includes Admission Control.

References

Informative references

Attention is drawn to the following places, which may be of interest for search:

Network architectures or network communication protocols for network security, for controlling e.g. access	H04L 63/10

H04L 67/1048

{Departure or maintenance mechanisms (methods for recovering from a failure of a protocol instance or entity H04L 69/40; intermediate processing providing operational support to end devices by emulation or by off-loading in the network H04L 67/2861; reactions to server failures by a load balancer H04L 67/1034; error detection or correction of the data by redundancy in operation G06F 11/14)}

Definition statement

This place covers:

Departure and maintenance mechanisms: Planned node departure (graceful disconnection); Due to node failure ("un"graceful disconnection); Responsiveness to node departures. Churn.

References

Limiting references

This place does not cover:

error detection or correction of the data by redundancy in operation	G06F 11/14

Informative references

Attention is drawn to the following places, which may be of interest for search:

Reaction to server failures by a load balancer	H04L 67/1034
Arrangements for providing operational support to end devices when they are unavailable	H04L 67/2861

Techniques for recovering from a failure of a protocol instance or entity, e.g. failover routines, service redundancy protocols, protocol state redundancy, protocol service redirection in case of a failure, disaster recovery	H04L 69/40

H04L 67/1051

{Group master selection mechanisms}

Definition statement

This place covers:

Selection mechanisms of group master/leader/head for peer groups.

H04L 67/1053

{with pre-configuration of logical or physical connections with a determined number of other peers}

Definition statement

This place covers:

Pre-configuration of logical or physical "connections" (i.e. relationships) with a determined number of other peers (e.g. connection limits in a system of automatic message relay peers or preestablishment of trust relationships among peers).

H04L 67/1055

{involving connection limits (involving dynamic management of active down- or uploading connections H04L 67/1085)}

Definition statement

This place covers:

Documents of H04L 67/1053 involving connection limits.

References

Limiting references

This place does not cover:

involving dynamic management of active down- or uploading connections	H04L 67/1085

Special rules of classification

For dynamically managing active "downloading" connections then use H04L 67/1085.

H04L 67/1057

{involving pre-assessment of levels of reputation of peers}

Definition statement

This place covers:

Documents of H04L 67/1053 involving pre-establishment or assessment of levels of trust among peers.

References

Informative references

Attention is drawn to the following places, which may be of interest for search:

Cryptographic mechanisms or cryptographic arrangements for entity authentication	H04L 9/32
Supporting authentication of entities communicating through a packet data network	H04L 63/08

Special rules of classification

For mere trust reinforcement techniques when exchanging contents like authentication with certificates then use H04L 63/08 and Indexing Code under H04L 67/1078.

H04L 67/1059

{Inter-group management mechanisms, e.g. splitting, merging or interconnection of groups}

Definition statement

This place covers:

Group splitting, groups merging, interconnection of groups.

H04L 67/1061

{involving node-based peer discovery mechanisms (access to replicated servers H04L 67/1002; service discovery H04L 67/16; topology discovery for routing H04L 45/02; information retrieval in distributed file systems G06F 17/30067; information retrieval in structured data stores, indexing, querying G06F 17/30286)}

Definition statement

This place covers:

This group relates to the function of finding peer nodes able to provide a specific resource (thus not just for relaying purposes, which should be classified under Resource Distribution).

References

Limiting references

This place does not cover:

Topology update or discovery	H04L 45/02

for accessing one among a plurality of replicated servers	H04L 67/1002
Service discovery or service management	H04L 67/16
File systems	G06F 17/30067
in structured data stores	G06F 17/30286

Special rules of classification

For selection mechanisms only this main entry to be given, as the selection details are meant to be classified under H04L 67/1002.The node discovery mechanisms are quite specific in the context of P2P and therefore they should not be classified under H04L 67/16 but with the subentries H04L 67/1063 - H04L 67/1065. Topology discovery for routing H04L 45/02 .

H04L 67/1063

{Discovery through centralizing entities}

Definition statement

This place covers:

Discovery through centralizing entities (e.g. NAPSTER and Trackers in BitTorrent).

H04L 67/1065

{Discovery involving distributed pre-established resource-based relationships among peers, e.g. based on distributed hash tables [DHT] (pre-configuration of logical or physical connections H04L 67/1053)}

Definition statement

This place covers:

Discovery involving distributed (in a structured way) pre-establishment of resource based relationships among peers; generally in so called structured P2P networks (e.g. based on Distributed Hash Tables).

References

Limiting references

This place does not cover:

pre-configuration of logical or physical connections	H04L 67/1053

H04L 67/1068

{Discovery involving direct consultation or announcement among potential requesting and potential source peers}

Definition statement

This place covers:

Discovery involving direct consultation/announcement mechanisms among (potential) requesting and (potential) source peers and/or involving local (at the requesting peer) compilation of content source node(s) information; generally in so called unstructured P2P networks (e.g. Broadcast/flooding mechanism, and spontaneous advertising of new contents by a potential source node).

Special rules of classification

Aspects involving measurements of the response times of the query hits are to be classified also under H04L 67/1002 (generally under the network condition criteria subgroup of H04L 67/101).

H04L 67/107

{with limitation or expansion of the discovery scope}

Definition statement

This place covers:

Documents of H04L 67/1068 involving limitation/expansion of the discovery scope (Max number of hops or TTL of the queries/announcements).

H04L 67/1072

{Discovery involving ranked list compilation of candidate peers}

Definition statement

This place covers:

Discovery involving (ranked) list compilation of candidate peers.

H04L 67/1074

{for supporting resource transmission mechanisms (routing over an overlay routing layer H04L 45/64; file transfer H04L 67/06)}

Definition statement

This place covers:

Resource dissemination/placing/storage, as well as resource delivery mechanisms. This group relates to the phase of actual exchange (and associated storage mechanisms) of resources.

References

Informative references

Attention is drawn to the following places, which may be of interest for search:

routing over an overlay routing layer	H04L 45/64
file transfer	H04L 67/06

H04L 67/1076

{Resource dissemination mechanisms or network resource keeping policies for optimal resource availability in the overlay network}

Definition statement

This place covers:

Resource dissemination mechanisms and data keeping policies (not user request based or user subscription based mechanisms) for optimal resource availability in the overlay network (e.g. mechanisms to guarantee persistence of resources in a group; seeding mechanisms).

H04L 67/1078

{Resource delivery mechanisms}

Definition statement

This place covers:

Documents characterized by the resource request/response delivery.

H04L 67/108

{characterized by resources being split in blocks or fragments}

Definition statement

This place covers:

Documents characterized by the resource being split in blocks or fragments (e.g. sequence order for requesting missing blocks and performing integrity checks).

H04L 67/1082

{involving incentive schemes}

Definition statement

This place covers:

Documents involving incentive/rewarding/punishment schemes. Free riding avoidance. Tit for Tat.

References

Informative references

Attention is drawn to the following places, which may be of interest for search:

Marketing, e.g. market research and analysis.	G06Q 30/02

H04L 67/1085

{involving dynamic management of active down- or uploading connections}

Definition statement

This place covers:

Documents involving dynamic management of active (downloading/uploading) connections (e.g. traffic engineering).

H04L 67/1087

{involving cross functional networking aspects}

Definition statement

This place covers:

Some other aspects that are not exclusively (i.e. mainly) under one of the main functional groups, are to be classified with entries under this header.

H04L 67/1089

{Hierarchical topologies}

Definition statement

This place covers:

Topology showing a clear Hierarchy (i.e. tree structure).

H04L 67/1091

{Interfacing with client-server systems or between P2P systems}

Definition statement

This place covers:

Interfacing with client/server systems and between different P2P systems (e.g. some contents to be retrieved from a dedicated "external" server).

H04L 67/1093

{Some peer nodes performing special functions}

Definition statement

This place covers:

Limited number of peer nodes performing special functions.

H04L 67/1095

{for supporting replication or mirroring of data, e.g. scheduling or transport for data synchronisation between network nodes or user terminals or syncML (synchronisation in information retrieval in file systems G06F 17/30067; synchronisation in structured data stores G06F 17/30575; mass storage redundancy by mirroring for error detection or correction of data G06F 11/2056)}

Definition statement

This place covers:

Replication or mirroring arrangements between servers, or between user terminals (e.g. arrangements for synchronization of data between user terminals).

References

Limiting references

This place does not cover:

mass storage redundancy by mirroring for error detection or correction of data	G06F 11/2056
synchronisation in information retrieval in file systems	G06F 17/30067
synchronisation in structured data stores	G06F 17/30575

Informative references

Attention is drawn to the following places, which may be of interest for search:

Caching arrangements in the network.	H04L 67/2842
Backing up, restoring or mirroring files or drives.	G06F 11/1402
Synchronization between mobile agents and networked agents.	G06F 11/1658

H04L 67/1097

{for distributed storage of data in a network, e.g. network file system [NFS], transport mechanisms for storage area networks [SAN] or network attached storage [NAS] (temporary storage of data at an intermediate stage H04L 67/2842; dedicated interfaces to storage systems G06F 3/0601)}

Definition statement

This place covers:

A Storage Area Network (SAN) is a sub-network of shared storage devices such as disk and tape. SANs provide high-speed, fault-tolerant access to data for client, server and host computing devices ("host computers").

Traditionally, computers were directly connected to storage devices, such that only the computer that was physically connected to those storage devices could retrieve data stored therein.

A SAN allows any computer connected to the SAN to access any storage device included within the SAN. As more storage devices are added to a SAN, they become accessible to any computer connected to the SAN. This access takes place at "block level" (as opposite to file level in NAS, Network Attached Storage).

Network Attached Storage, NAS, storage devices that provide access to storage at "file level".

Examples of protocols: iSCSI (internet Small Computer System Interface), RDMA (Remote Direct Memory Access).

References

Limiting references

This place does not cover:

temporary storage of data at an intermediate stage	H04L 67/2842
dedicated interfaces to storage systems	G06F 3/0601

Informative references

Attention is drawn to the following places, which may be of interest for search:

Fibre Channel switches.	H04L 49/357
Fibre Channel identifiers	H04L 61/6045
Storage system details, disk controllers, digital I/O to/from direct storage devices.	G06F 3/0689
Resource allocation, load balancing	G06F 9/46
Error detection/correction, fault tolerance, RAID levels.	G06F 11/00
Addressing issues in Fibre Channel (computers)	G06F 12/00

DMA, Direct Memory Access	G06F 13/28
Fibre Channel bus (in computers)	G06F 13/426
Network Attached Storage, File Systems, File Servers.	G06F 17/30067

H04L 67/12

{adapted for proprietary or special purpose networking environments, e.g. medical networks, sensor networks, networks in a car or remote metering networks (digital computing or data processing equipment or methods, specially adapted for specific applications in healthcare or life sciences G06F 19/00; home automation networks H04L 12/2803; total factory control characterised by the network communication G05B 19/4185; games involving transmission systems A63F 13/30)}

Definition statement

This place covers:

- Networks that are specially adapted for a specific application or networking environment, like vehicles, aircraft, medical, process control, factory control, mining, well drilling, patient monitoring, etc...
- Networks in which control information is transmitted, as opposed to plain data.
- Sensor networks or sensor/actuator networks, i.e. networks of devices that detect physical or measured values and convert them to data; and/or networks of devices that take data and convert it to physical control actions (e.g. activating an actuator).
- Networks for a particular technical environment, like vehicles or aircrafts.
- "Internet-of-things" or machine-to-machine communication M2M, i.e. networks for ubiquitous computing and networking of objects that communicate with each other.

Relationships with other classification places

Aircraft: B64; Vehicles: B60; Medical science: A61; Computers: G06F; Measuring, sensors: G01; Controlling, regulating: G05; Signalling: G08.

Wireless sensor networks (WSN), wireless ad-hoc networks whereby the invention lies in the special adaption of WSNs to wireless networks are classified in H04W 84/18.

Topology and routing aspects are classified in H04L 12/5689.

References

Informative references

Attention is drawn to the following places, which may be of interest for search:

Attention is drawn to the following places, which may be of interest for search, and where documents might have to be classified too (or exclusively):

Medical science, diagnosis, transmitting measured data	A61B 5/0002
(Computer or video) games interconnected with networks	A63F 13/30
Vehicles. Transmission of signals between vehicle parts or subsystems	B60R 16/023
Vehicles. Conjoint control of vehicle subunits	B60W
Aircraft. Control systems and transmission networks for actuating flight control surfaces, fly by wire	B64C 13/503

Aircraft. Remote control and communication of/with unmanned aircraft, i.e. drones	B64C 39/024
Aircraft. Arrangements for entertainment or communication in passenger or crew accommodation	B64D 11/0015
Earth drilling. Transmitting measured signals	E21B 47/12
Seismology. Seismic prospecting. Transmitting seismic signals	G01V 1/22
Total factory control characterized by the network communication, i.e. interconnections of machines or factory elements by means of specialized networks	G05B 19/4185
Aircraft. Flight control systems, i.e. automatic pilot	G05D 1/00
Computers specially adapted for specific applications, like medical, bioinformatics or game playing	G06F 19/00
Telemedicine, e.g. remote diagnostics, remote control or monitoring of patient carried devices	G06F 19/3418
Networks used to signal the maintenance condition of a vehicle; fleet management	G07C 5/00
Alarm systems, reporting the alarm via a telecom network	G08B 25/00
Aircraft. Traffic control systems for aircraft, i.e. air traffic control	G08G 5/00
Remote control of audio/video equipment (HiFi equipment)	H04B 1/202
Aircraft. Communications with or from aircraft; aeronautical mobile service	H04B 7/18506
Home automation networks	H04L 12/2803
Peer-to-peer networks	H04L 67/104
Location based services	H04L 67/18
Telephonic communication in combination with telemetry, remote control systems, or alarm systems	H04M 11/002, H04M 11/007, H04M 11/04
Wireless sensor networks, self-organizing, ad-hoc	H04W 84/18

Special rules of classification

Special networks as defined above should be classified both in H04L 67/12 and the application subgroups of H04L 67/00 they support.

Sensor networks in general are classified in H04L 67/12. Here the classification code is applied if the invention lies in a communications protocol specially adapted for the sensor network, e.g. particular master/slave node hierarchy negotiations, messaging for dynamic network configuration, mutual power management.

H04L 67/125

{involving the control of end-device applications over a network (end-device control or monitoring using web-based technology H04L 67/025; network management of network elements H04L 12/24)}

Definition statement

This place covers:

Application layer functionality of controlling or monitoring end-devices over a network, in particular with special purposes or proprietary protocols.

References

Limiting references

This place does not cover:

Network management of network elements	H04L 12/24
Device control and monitoring using web-based technology	H04L 29/08099
network management of network elements	H04L 67/025

H04L 67/14

{for session management (session control for real-time communications H04L 65/1066; session initiation protocol H04L 65/1006; negotiation of communication capabilities H04L 69/24; computer conference arrangements H04L 12/1813; connection management in wireless networks H04W 76/00; session management for telephonic communication and services H04M 7/00; intertask communications in multiprogramming arrangements G06F 9/54)}

Definition statement

This place covers:

Arrangements for dynamic session management between at least two endpoints in networks controlled for applications, whereby sessions are initiated (setup), identified, modified or ended (release) and involve a state of the session during the lifetime of the session.

A session is a sequence of interactions between two endpoints providing signalling and traffic processing control independent of the underlying network structure, and can have a beginning, and end and during its existence, a state. A session comprises at least one signalling message for

beginning a session and, optionally, messages for modifying and/or ending the session. A session can be identified and a session state can be kept during the lifetime of sessions.

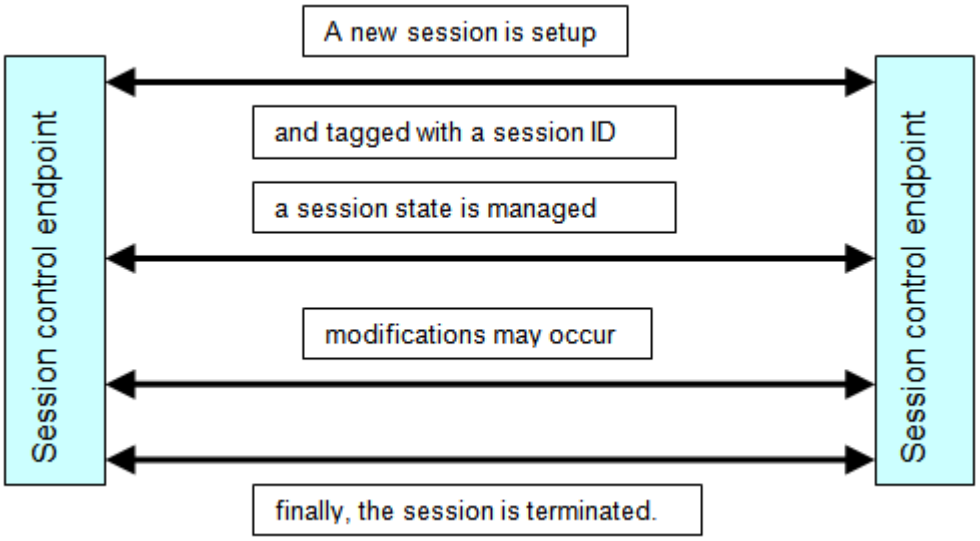

Relationships with other classification places

In general, this group does not cover sessions at OSI layers 2-4, e.g. fixed or wireless data network access, packet switching or routing, mobile IP provisions, wireless connections, telephonic connections. These are classified in, e.g. H04L 12/28, H04L 12/56, H04L 12/46, H04W, H04L 29/08027 - H04L 29/08045.

References

Limiting references

This place does not cover:

Real-time session management for multimedia connections	H04L 65/00
Negotiation of communication capabilities	H04L 69/24
Intertask communication in multiprogramming arrangements for program control	G06F 9/54
Session management for telephonic communication and services	H04M 7/00
Connection management in wireless networks, e.g. connection set-up, manipulation or release	H04W 76/00

References out of a residual place

Examples of places in relation to which this place is residual:

Data switching networks	H04L 12/00
Arrangements and protocols for real-time communications	H04L 65/00
Services or facilities specially adapted for wireless communication networks	H04W

Informative references

Attention is drawn to the following places, which may be of interest for search:

Session Initiation Protocol	H04L 65/1006

IP Multimedia Subsystem	H04L 65/1016
In-session procedures in real-time communications	H04L 65/1083
Distributed applications	H04L 67/10
Access to replicated servers, e.g. loadbalancing	H04L 67/1002
Push Services	H04L 67/26
Control or signalling for completing the hand-off in wireless networks	H04W 36/0005

Special rules of classification

This group is a residual subgroup and covers session signalling at higher OSI layers to support networked applications.

Documents with the following additional aspects should get a second code in:

- Negotiation of communication capabilities: H04L 69/24
- Security aspects related to sessions, e.g. securing data, access control, exchange of credentials: subgroups of H04L 63/00
- OSI Layer 5, session layer, if the invention explicitly resides in Layer 5: H04L 69/327
- Services running on top of user sessions, service discovery: H04L 67/16
- Location based services in general: H04L 67/18
- Presence data management: H04L 67/24
- Push Services: H04L 67/26
- User profiles: H04L 67/306
- Distributed applications: H04L 67/10
- Location based services in wireless networks: H04W 4/02

H04L 67/141

{provided for setup of an application session (session setup for real-time communications H04L 65/1069)}

Definition statement

This place covers:

Arrangements for the setup of a session which supports networked applications, e.g. using signalling messages.

References

Limiting references

This place does not cover:

Setup in session control in real-time multimedia communications	H04L 65/1069

H04L 67/142

{provided for managing session state for stateless protocols; Signalling a session state; State transitions; Keeping-state mechanisms}

Definition statement

This place covers:

Arrangements for managing the state of a session in stateless protocols, e.g. HTTP, e.g. by using cookies or dynamic URLs. Examples: WO0171523; with HTTP cookie: WO0193092.

References

Limiting references

This place does not cover:

In-session procedures in real-time multimedia communications	H04L 65/1083

H04L 67/143

{provided for session termination, e.g., event controlled end of session}

Definition statement

This place covers:

E.g. managing a session release.

H04L 67/146

{Markers provided for unambiguous identification of a particular session, e.g. session identifier, session cookie or URL-encoding (IP multimedia subsystem H04L 65/1016; cryptographic mechanisms for verifying the identity or authority of a user or a system, ID based authentication H04L 9/32; cryptographic mechanisms for ID based key exchange H04L 9/08)}

References

Limiting references

This place does not cover:

ID based key exchange	H04L 9/08
Verifying the identity or authority of a user or a system, ID based authentication	H04L 9/32
Assigning addresses to a networking function	H04L 61/60
IP multimedia subsystem	H04L 65/1016

H04L 67/147

{provided for signalling methods or particular messages providing extensions to IETF, ITU, ETSI or 3GPP protocols, e.g., additional proprietary messages, standard messages enhanced by additional header fields or standard messages being used for purposes other than originally intended}

Definition statement

This place covers:

E.g. messages for inviting multiple participants to parallel sessions, the response messages indicating ability or non-ability for participation in parallel sessions.

H04L 67/148

{provided for migration or transfer of sessions (in-session procedures in real-time communications H04L 65/1083; control or signalling for completing the hand-off in wireless networks H04W 36/0005)}

References

Limiting references

This place does not cover:

In-session procedures in real-time communications	H04L 65/1083
Control or signalling for completing the hand-off in wireless networks	H04W 36/0005

H04L 67/16

{Service discovery or service management, e.g. service location protocol [SLP] or Web services (address allocation to terminals or nodes connected to a network H04L 61/30; mobile application services specially adapted for wireless communication networks H04W 4/00; network service management for ensuring proper service fulfilment according to an agreement or contract between two parties H04L 12/2464)}

Definition statement

This place covers:

Service management arrangements to discover, search and advertise network services (i.e. network resources as servers, printers, etc.).

That includes network arrangements and mechanisms to make clients aware of available network services or resources.

References

Limiting references

This place does not cover:

network service management for ensuring proper service fulfilment according to an agreement or contract between two parties	H04L 12/2464
address allocation to terminals or nodes connected to a network	H04L 61/30

mobile application services specially adapted for wireless communication networks	H04W 4/00

Informative references

Attention is drawn to the following places, which may be of interest for search:

Service provisioning in data communication networks; Service Level Agreements, SLAs	H04L 12/2417
Selection of a specific server.	H04L 67/1002
Selection based on location.	H04L 67/18
Selection based on QoS; on context, content...	H04L 67/322; H04L 67/327
Service creation techniques in Intelligent Networks.	H04Q 3/0054
Wireless; Discovering of network services, e.g. terminals.	H04W 8/005
Discovery of wireless access points.	H04W 48/20

H04L 67/18

{in which the network application is adapted for the location of the user terminal (wireless application services making use of the location of users or terminals H04W 4/02 takes precedence; location based Web retrieval G06F 17/3087)}

Definition statement

This place covers:

Network applications in which the position of the user, either geographical position, or topological position in the network, is used as a parameter to activate a set of value added functions that generate position dependant information (for example, using the geographical position of the user to inform him of the restaurants or gas stations around him).

References

Limiting references

This place does not cover:

Services making use of the location of users or terminals	H04W 4/02

Informative references

Attention is drawn to the following places, which may be of interest for search:

Navigation systems specially adapted for navigating in a road network (car navigation systems).	G01C 21/26
Position determining by GPS or similar systems, using radio waves.	G01S 5/00
Geographical information databases.	G06F 17/30241
Spatially dependent indexing and retrieval in internet browsers, i.e. location dependent results to queries.	G06F 17/3087
Telephonic communication terminals (i.e. phones) with means for adapting their capabilities according to geographical position.	H04M 1/72572

Location based services in a PBX (telephonic exchange).	H04M 3/42348
Services making use of the location of users or terminals in a wireless network; in a dedicated environment, building or vehicle.	H04W 4/02, H04W 4/04
Locating users or terminals in a mobile wireless (cellular) telecom network.	H04W 64/00

H04L 67/20

{involving third party service providers (e-commerce G06Q 30/00)}

References

Limiting references

This place does not cover:

e-commerce	G06Q 30/00

Informative references

Attention is drawn to the following places, which may be of interest for search:

Charging for the transmission of data.	H04L 12/14
See also references of	H04L 67/22
Payment systems, architectures and protocols.	G06Q 20/00
Advertising; customer management; buyer profiling; market research.	G06Q 30/02
Data processing in buying/selling transactions.	G06Q 30/06
Providing advertisement messages in voice networks.	H04M 3/4878
Charging for voice communications; metering arrangements.	H04M 15/00

H04L 67/22

{Tracking the activity of the user (recording of computer activity G06F 11/34; network monitoring arrangements H04L 12/2602; e-commerce G06Q 30/00)}

Definition statement

This place covers:

End user activity tracking/monitoring (as opposite to monitoring of networks and network devices).

References

Limiting references

This place does not cover:

network monitoring arrangements	H04L 12/2602
recording of computer activity	G06F 11/34
e-commerce	G06Q 30/00

Informative references

Attention is drawn to the following places, which may be of interest for search:

Monitoring user activity for billing/charging purposes.	H04L 12/14
Multicast; management of group membership.	H04L 12/185
Network management.	H04L 12/24
Network monitoring.	H04L 12/2602
Instant messaging.	H04L 12/581
Presence management.	H04L 67/24
Creation/usage of user profiles.	H04L 67/306
Computers; monitoring of computer activity, of computer processes.	G06F 11/30
Databases; data mining.	G06F 17/30539
Synchronized browsing.	G06F 17/30873
Time management; calendars; reminders.	G06Q 10/109
Market research; buyer profiling; social networks; groupware; social network analysis.	G06Q 30/02 ; G06Q 10/10
Network management in voice networks.	H04Q 3/0062
Wireless; selective distribution; user group management	H04W 4/08

H04L 67/24

{Presence management (use and manipulation of presence information in instant messaging H04L 12/5815)}

Definition statement

This place covers:

Presence management, i.e. monitoring and registration of the log-on/connected status of users connected to data networks.

References

Limiting references

This place does not cover:

use and manipulation of presence information in instant messaging	H04L 12/5815

Informative references

Attention is drawn to the following places, which may be of interest for search:

Tracking the activity of the user	H04L 67/22

H04L 67/28

{for the provision of proxy services, e.g. intermediate processing or storage in the network (network management provisions H04L 12/24; network monitoring provisions H04L 12/2602; media manipulation, adaptation or conversion in real-time communications H04L 65/601; protocol conversion H04L 69/08; proxies for network security H04L 63/0281)}

Definition statement

This place covers:

Arrangements involving intermediate processing or storage in the network, i.e. wherein additional processing of the application data is performed somewhere between the data provider and data consumer application.

E.g. proxy servers: A proxy server is a computer that offers a computer network service to allow clients to make indirect network connections to other network services. A client connects to the proxy server, then requests a connection, file, or other resource available on a different server. The proxy provides the resource either by connecting to the specified server or by serving it from a cache. In some cases, the proxy may alter the client's request or the server's response for various purposes.

[see http://en.wikipedia.org/wiki/Proxy]

Relationships with other classification places

Excluded from classification in H04L 67/28 are, in general, interprocessing provisions which, due to their specific use or purpose, are already covered by other groups:

- Interprocessing at OSI layers 1-4 (e.g. routing, addressing conversion, mobile IP provisions, etc.) is per definition out of the scope of H04L 67/28. This subject-matter is classified e.g. in H04L 12/00, H04W
- Third entities which are not involved during the active exchange of data between data provider and data consumer.
- Intermediate entities of application layer solutions defined in terms of rules or functioning of a specific application not involving more than trivial network/protocol elements (e.g. E-commerce G06Q, Games applications A63F).

References

Limiting references

This place does not cover:

Messaging systems	H04L 12/58
Pure addressing functionalities	H04L 61/00
Security, e.g. censorware, policy, malware interception, anonymity, HTTPS, SSL proxies	H04L 63/00
Multimedia call management network architectures	H04L 65/1013
Interprocessing specifically for real time streaming applications, e.g. transcoding proxies	H04L 65/60
Mere presence of gateways performing its trivial functions, e.g. WAP gateways, WAP	H04L 67/04
Load balancing	H04L 67/1002
Generic protocol conversion	H04L 69/08
Message passing systems or structures for intertask communication	G06F 9/546

Transcoding algorithms, e.g. MPEG conversions	H04N 7/00

Informative references

Attention is drawn to the following places, which may be of interest for search:

Billing provisions	H04L 12/14
Network management provisions	H04L 12/24
Monitoring provisions	H04L 12/2602
Security provisions	H04L 63/00

Special rules of classification

Documents with the following additional aspects should be classified not only with their specific interprocessing aspects but also in the following other groups:

- Data adaptation according to terminal reduced capabilities: H04L 67/04
- Permanent content data storage at intermediate nodes, e.g. replication, mirroring, in a storage area network: H04L 67/1095, H04L 67/1097
- Connection and session management: H04L 67/14
- Data adaptation according to location context: H04L 67/18
- Presence management: H04L 67/24
- Push services: H04L 67/26
- Data adaptation according to terminal profiles: H04L 67/303
- Data adaptation according to user profiles: H04L 67/306
- Routing according to the context/content of the requests: H04L 67/327
- Data backup, redundancy and recovery functionalities: H04L 69/40

H04L 67/2804

{for adding application control or application functional data, e.g. adding metadata}

Definition statement

This place covers:

Adding control or functional data, e.g. metadata (EP1168264). The intermediate processing consists in enhancing the functional value of the transmitted content; also in case of (partially) replacing the received content by content of more interest for the consumer application.

H04L 67/2809

{for brokering (negotiation of communication capabilities H04L 69/24; e-commerce G06Q 30/00)}

References

Limiting references

This place does not cover:

negotiation of communication capabilities	H04L 69/24
e-commerce	G06Q 30/00)

Informative references

Attention is drawn to the following places, which may be of interest for search:

Protocols for client-server architecture	H04L 67/42
Negotiation of communication capabilities	H04L 69/24
E-commerce	G06Q 30/00

H04L 67/2814

{for data redirection (load balancing of replicated servers H04L 67/1002; access network selection H04L 12/5691; routing or path finding of packets H04L 45/00; content or context based routing H04L 67/327; network addressing or naming provisions H04L 61/00)}

Definition statement

This place covers:

Providing redirection of requests for connection to a specified server or service, e.g. transparent proxying (WO0144975). A message that is initially sent by a first node and intended to a second node is redirected by said second node to a third node (either by resending the message by the second node or by providing the third node address to the first node).

References

Limiting references

This place does not cover:

Routing path selection	H04L 12/5689
routing or path finding of packets	H04L 45/00
Load balancing requests	H04L 67/1002
Context based routing	H04L 67/327

Informative references

Attention is drawn to the following places, which may be of interest for search:

Access network selection	H04L 12/5691
Addressing aspects	H04L 61/00

Special rules of classification

To be used only when it involves service providers providing different services, in case of selecting the most efficient server to provide one specific service then H04L 67/1002 should be used.

H04L 67/2819

{Enhancement of application control based on intercepted application data}

Definition statement

This place covers:

Evaluating intercepted data for data control, e.g. exploiting metadata for cache control (XP001065907; XP002197614), inferring and storing control or functional data (in a table US2005144308), validation of requests.

Special rules of classification

Broad interprocessing concept to be used when this aspect is explicitly relevant in a document and it is not more particularly covered by one of the other functional entries (i.e. not to be used if it is simply a trivial necessary previous step of one of the other functionalities).

H04L 67/2823

{for conversion or adaptation of application content or format (protocol conversion H04L 69/08; media manipulation, adaptation or conversion in real-time communications H04L 65/601; message adaptation based on network or terminal capabilities H04L 12/5825; optimising visualization of content for web browsing G06F 17/30905)}

Definition statement

This place covers:

Converting/adapting contents/formats according to the application format type, e.g. using an intermediate format, transcoding (transcoding proxy: XP004304767, see Fig. 1; WO0103398; XP000790121; EP0992922; transcoding cache proxy: XP002293154).

References

Limiting references

This place does not cover:

message adaptation based on network or terminal capabilities	H04L 12/5825
media manipulation, adaptation or conversion in real-time communications	H04L 65/601
Arrangements for adding application control or application functional data	H04L 67/2804
Arrangements for reducing the amount or size of exchanged application data	H04L 67/2828
Protocol conversion	H04L 69/08
optimising visualization of content for web browsing	G06F 17/30905

Special rules of classification

H04L 67/2823 is used when data is adapted for interoperability; if enhancing the functional value is relevant, then H04L 67/2804 takes precedence; otherwise H04L 67/2828 takes precedence.

H04L 67/2828

{for reducing the amount or size of exchanged application data (protocols for data compression H04L 69/04; digital video compression H04N 19/00)}

Definition statement

This place covers:

Intermediate processing aimed to reduce the exchanged application data, e.g. for distillation of contents for a small display terminal.

References

Limiting references

This place does not cover:

Protocols for data compression	H04L 69/04

Informative references

Attention is drawn to the following places, which may be of interest for search:

Optimizing visualization of content	G06F 17/30905
Digital video compression	H04N 19/00

H04L 67/2833

{for grouping or aggregating service requests, e.g. for unified processing of service requests (networking arrangements or communication protocols for scheduling or organising the servicing of application requests H04L 67/32)}

Definition statement

This place covers:

Grouping service requests for unified processing; a plurality of requests from consumer application(s) are correlated somehow and dealt together as intermediate processing, e.g. push/pull proxy (EP1359729, push proxy: EP1021021, push-pull proxy: EP1308858).

References

Limiting references

This place does not cover:

networking arrangements or communication protocols for scheduling or organising the servicing of application requests	H04L 67/32

H04L 67/2838

{for integrating service provisioning from a plurality of service providers (web site content organization and management G06F 17/3089)}

Definition statement

This place covers:

Integrating various data provision/service applications to appear as one single front-end (US2005270970), e.g. web portals including servlets. (web portals are also classified in H04L 67/02, (US2003079047)). An intermediate application provides a multi-service or multi-provider experience to a consumer application by offering or integrating the provision of services from a plurality of background service providers.

References

Limiting references

This place does not cover:

Redirecting requests to service providers	H04L 67/2814
web site content organization and management	G06F 17/3089

Informative references

Attention is drawn to the following places, which may be of interest for search:

Web portals	H04L 67/02

H04L 67/2842

{for storing data temporarily at an intermediate stage, e.g. caching (distributed storage of data in a network H04L 67/1097; browsing optimization of access to content by caching G06F 17/30902; addressing of a cache within a hierarchically structured memory system G06F 12/0802; disk caching G06F 12/0866)}

Definition statement

This place covers:

Temporarily storing data at an intermediate stage, e.g. caching (US20061365731, XP011091295; XP002197614) including:

- caching involving pre-fetching or pre-delivering data (WO9917227, US2002198991);
- Managing the intermediate device storage space, e.g. policies for admission, replacement, update, refresh, deletion (WO2006079980, US6826599);
- caching involving storage of data provided by user terminals, i.e. reverse caching (WO0213479, SA464803).

References

Limiting references

This place does not cover:

distributed storage of data in a network	H04L 67/1097
addressing of a cache within a hierarchically structured memory system	G06F 12/0802

disk caching	G06F 12/0866
Browsing optimization of access to content by caching	G06F 17/30902

H04L 67/2861

{for providing operational support to end devices by emulation, e.g. when they are unavailable, or by off-loading in the network (techniques for recovering from a failure of a protocol instance or entity H04L 69/40; reactions to server failures by a load balancer H04L 67/1034; departure or maintenance mechanisms in peer-to-peer networks H04L 67/1048; terminal emulation H04L 67/08; disconnected operation in file systems G06F 17/30067; emulation or software simulation G06F 9/455; input/output emulation function for peripheral devices G06F 13/105)}

Definition statement

This place covers:

The intermediate processing consists in taking over partially (i.e. off-loading) or temporally fully (i.e. when end terminal is unavailable) the tasks of an end node (US2006136554).

References

Limiting references

This place does not cover:

terminal emulation	H04L 67/08
Reactions to server failures by a load balancer	H04L 67/1034
Departure and maintenance mechanisms in Peer-to-Peer networks	H04L 67/1048
emulation or software simulation	G06F 9/455
input/output emulation function for peripheral devices	G06F 13/105
disconnected operation in file systems	G06F 17/30067

Informative references

Attention is drawn to the following places, which may be of interest for search:

Counter-measures to a fault	H04L 69/40

H04L 67/2866

{Architectural aspects}

Definition statement

This place covers:

Architectural non-trivial arrangements characterised by the implementing details of the interprocessing function.

Examples are

- Implementation details of a single intermediate entity;

- or pairs of interprocessing entities at each side of the network, e.g. split proxies (US5673322, US2005138176);
- or distributed intermediate devices, i.e. intermediate device interaction with other intermediate devices on the same level;
- or hierarchically arranged intermediate devices, e.g. hierarchical caching (WO9917227, EP1298878);
- or where the intermediate processing is functionally located closer to the data consumer application, e.g. in same machine, in same home or in same subnetwork (US2003110218);
- or where the intermediate processing is functionally located closer to the data provider application, e.g. reverse proxies; in same machine, in same cluster or subnetwork (US6665721, US2005198311, EP1255395, XP002388117, US2003154306, FR20040012345, WO03007575, US2004044768, XP002297980, US2002091757, EP1215597, US6665721, XP011091295.

H04L 67/34

{involving the movement of software or configuration parameters (programme loading or initiating G06F 9/445; remote booting G06F 9/4416; configuration management of network or network elements H04L 12/2424)}

Definition statement

This place covers:

The transmission of programs (i.e. pieces of executable software, as opposed to plain data), in the form of downloading or bootstrapping (i.e. transmitting the operating system and networking software from the network to a diskless workstation).

The transmission of components of a program like Java applets on request, i.e. when a certain function has to be executed at a workstation.

The customisation, parameterization or configuration of generic network elements, by downloading additional programs and/or data.

References

Limiting references

This place does not cover:

configuration management of network or network elements	H04L 12/2424
remote booting	G06F 9/4416
programme loading or initiating	G06F 9/445

Informative references

Attention is drawn to the following places, which may be of interest for search:

Configuration of network and network elements.	H04L 12/2424
Software download or update in routers.	H04L 45/563
Address allocation	H04L 61/30
Program loading or initiating.	G06F 9/445
Task transfer, task migration, mobile agents.	G06F 9/4856
Cordless telephones; software upgrading or downloading.	H04M 1/72525
Updating, downloading or transfer of parameters to mobile subscriber equipment.	**H04Q7/321**

H04L 67/36

{involving the display of network or application conditions affecting the network application to the application user (graphical user interfaces for network management H04L 12/2458)}

Definition statement

This place covers:

Aspects of the user interface that have to do with networking, i.e. indicating to the user some network condition with a special user interface.

Relationships with other classification places

Cordless telephone, i.e. mobile user terminal.

References

Limiting references

This place does not cover:

graphical user interfaces for network management	H04L 12/2458

Informative references

Attention is drawn to the following places, which may be of interest for search:

Terminal emulation, networking aspects	H04L 67/08
Pointing devices	G06F 3/033
Interaction techniques for user interfaces, menus, icons, windows, ...	G06F 3/048
User interface programs, command shells, help systems, multi-language systems	G06F 9/4443
Terminal emulation	G06F 13/107
Mark-up languages	G06F 17/2247
Speech synthesis; text to speech conversion	G10L 13/00
Speech recognition	G10L 15/00
Cordless telephones for supporting an internet browser application	H04M 1/72561
Interacting with a data network using a telephonic device, e.g. browsing the World Wide Web with a telephone	H04M 3/4938

H04L 67/38

{Protocols for telewriting; Protocols for networked simulations, virtual reality or games (games using an electronically generated display A63F 13/00; remote windowing or X-Windows G06F 9/4445)}

Definition statement

This place covers:

Protocols for telewriting, networked virtual reality, and networked games.

Telewriting: the (remote) reproduction by means of a telecommunication system of the movements of a pointing device (for example a pen writing "electronic ink" into a digitizer tablet or a touch screen) in a remote display, in such a way as to transmit the handwriting of a user to a remote user. The information to be transmitted consists of the coordinates of the position of the pointing device and the movement vector, or similar representations of position and movement.

Networked virtual reality, networked simulation, networked games: transmitting to (remote) user device(s) the movements and interactions (i.e. shooting weapons in an aircraft combat simulation) of a 2D/3D representation of an entity (person, animal, vehicle, aircraft, avatar, etc...) in such a way that this entity can be represented in a display at the remote device, so as to enable the two (or more) users to interact with each other by means of the representation of the entity. The information to be transmitted here is more complex, and is dependent on the characteristics of the entity. It can include orientation, position, speed/velocity, rotation, acceleration, movement of sub-components of the entity (i.e. movement of an arm of a robot), interactions (i.e. shooting of weapons, change of colours, audio, voice, etc..), etc...

The distinction between virtual reality, simulation or game is one of purpose of the interaction: in the networked simulation case the purpose is to teach the user in the control of an entity; in the networked games the purpose is entertainment. The devices used are classified in different places in the classification, see references below.

The protocols adapted to these kinds of applications are very specific, and contain a lot of application information in the protocol itself. For example, the transmission of packets to the participants in a simulation, which is of a multicast nature, is sometimes restricted to those objects for which the information is relevant: movements of a mobile out of sight of a participant (behind an obstacle or mountain, or very far away) are not relevant, and are thus not transmitted, to avoid congestion in the network.

Protocols, like X-windows, that separate the GUI (Graphical User Interface) elements from an application from the rest of the application, and locate these GUI elements in a network node remote from the node in which the rest of the application functionality resides.

References

Informative references

Attention is drawn to the following places, which may be of interest for search:

Aspects of games using a display, and involving interaction between a plurality of (remote) game devices; virtual reality.	A63F 13/12
Features of games: characterized by details of network, like secure communication, wireless, internet, peer to peer, etc...	A63F 2300/40 - A63F 2300/409
Digital output (from CPU) to display device.	G06F 3/14
Digital output (from CPU) to display device, with simultaneous display of data in two or more (remote) displays.	G06F 3/1454
Information retrieval from the internet (browsers), virtual worlds or virtual tours.	G06F 17/30873
Image processing, 2D image generation.	G06T 11/00
Image processing: animation.	G06T 13/00
Image processing: 3D image rendering.	G06T 15/00
Image processing: 3D image modelling, i.e. data description of 3D objects.	G06T 17/00
Coin-freed apparatus for playing games; interconnected into groups; casino-like gaming devices.	G07F 17/32; G07F 17/329

Simulators for teaching or training purposes; for teaching control of vehicles; aircraft (i.e. flight) simulators.	G09B 9/00; G09B 9/02; G09B 9/08
Telephone sets including a gaming application.	H04M 1/72544

H04L 69/00

{Application independent communication protocol aspects or techniques in packet data networks (interconnection arrangements between CPUs, memories, or peripherals within a single computer G06F 13/00; data switching networks H04L 12/00; flow control H04L 12/569; routing of packets H04L 12/5689; network management H04L 12/24; network monitoring or testing H04L 12/26; network topologies, i.e. networks characterized by the path configuration, media access control H04L 12/28; intermediate storage or scheduling H04L 12/5694; packet switches and switching fabrics H04L 12/5696; message switching systems, e.g. email, H04L 12/58; broadcast or multicast H04L 12/18; hybrid switching systems H04L 12/64; gateways H04L 12/66; networks specially adapted for wireless communication H04W; transmission systems H04B)}

Definition statement

This place covers:

Application independent communication protocol aspects and techniques in packet data networks.

Relationships with other classification places

Interconnection arrangements between CPUs, memories or peripherals within a single computer G06F 13/00.

References

Limiting references

This place does not cover:

Data switching networks	H04L 12/00
Broadcast or multicast	H04L 12/18
Network management	H04L 12/24
Network monitoring or testing	H04L 12/26
Network topologies, i.e. networks characterized by the path configuration, Media Access Control (MAC)	H04L 12/28
Routing of packets	H04L 12/5689
Flow control	H04L 12/569
Intermediate storing or scheduling	H04L 12/5694
Packet switches and switching fabrics	H04L 12/5696
Message switching systems, e.g. email	H04L 12/58
Hybrid switching systems	H04L 12/64
Gateways	H04L 12/66
Transmission systems	H04B

Networks specially adapted for wireless communication	H04W

H04L 69/02

{Protocol performance}

Definition statement

This place covers:

Protocol performance.

H04L 69/03

{Protocol definition or specification (protocol conformance testing H04L 1/244; specification techniques G06F 8/10)}

Definition statement

This place covers:

Protocol definition or specification, programming languages and methods specially adapted for the definition or specification of protocols.

References

Limiting references

This place does not cover:

Protocol definition or specification (protocol conformance testing	H04L 1/244
specification techniques	G06F 8/10

Informative references

Attention is drawn to the following places, which may be of interest for search:

Protocol conformance testing; generators of test sequences	H04L 1/244
Protocol analyzers	H04L 12/2694
Program specification techniques	G06F 8/10
Specific high level programming languages	G06F 8/31

H04L 69/04

{Protocols for data compression (compression in general H03M 7/30; reduction of the amount or size of exchanged application data at an intermediate network processing stage H04L 67/2828; optimizing, e.g. header compression, information sizing in wireless communication networks H04W 28/06)}

Definition statement

This place covers:

Use of data compression to reduce the size of payload/header.

References

Limiting references

This place does not cover:

reduction of the amount or size of exchanged application data at an intermediate network processing stage	H04L 67/2828
Data compression algorithms	H03M 7/30
optimizing, e.g. header compression, information sizing in wireless communication networks	H04W 28/06

Informative references

Attention is drawn to the following places, which may be of interest for search:

Reduction of the amount or size of exchanged application data at an intermediate network processing stage	H04L 67/2828
Header parsing and analysis; compressing the header.	H04L 69/22

H04L 69/06

{Notations for structuring of protocol data, e.g. abstract syntax notation one [ASN.1]}

Definition statement

This place covers:

Notations for structuring of protocol data.

Protocols and mechanisms like ASN.1 (Abstract Syntax Notation 1) which are used to convey meta information in a data stream, that is data about the syntactical and semantic structure of the data itself, self-describing constructs and so on, and the encoding mechanisms associated to them.

Relationships with other classification places

Computers, information retrieval: G06F 17/00.

References

Informative references

Attention is drawn to the following places, which may be of interest for search:

Computers, handling natural language, text processing, tree structured documents, mark up languages, i.e. XML.	G06F 17/2247
Computers. Information retrieval of semi-structured data, like XML.	G06F 17/30908
Conversion between different mark-up languages.	G06F 17/3092

H04L 69/08

{Protocols for interworking or protocol conversion (arrangements for connecting between networks having differing types of switching systems, e.g. gateways, H04L 12/66; network management protocols conversion H04L 12/2405)}

Definition statement

This place covers:

Conversion between a protocol and another protocol.

References

Limiting references

This place does not cover:

Network management protocols conversion	H04L 12/2405

Informative references

Attention is drawn to the following places, which may be of interest for search:

Interconnection of networks	H04L 12/46
Inter-networking arrangements, interconnection of networks having different types of switching systems (i.e. connection oriented to connectionless), i.e. gateways	H04L 12/66
Addressing; mapping of addresses of different types; address resolution	H04L 61/10
Addressing; mapping of addresses of the same type; address translation	H04L 61/25
Multimedia communication; gateways	H04L 65/102
Multimedia communication. Media handling and conversion	H04L 65/60
Computers. Information retrieval. File format conversion.	G06F 17/30005
Computers. Information retrieval. Conversion between semi structured data, i.e. between different mark-up languages	G06F 17/3092

H04L 69/10

{Streamlined, light-weight or high-speed protocols, e.g. express transfer protocol [XTP] or byte stream}

Definition statement

This place covers:

Streamlined, light-weight or high-speed protocols, e.g. express transfer protocol [XTP], byte stream.

H04L 69/12

{Protocol engines, e.g. VLSIs or transputers}

Definition statement

This place covers:

Specialized CPUs or hardware devices with an instruction set adapted for those operations that occur more in the implementation of protocols, like bit masking, shifting, comparisons, but no floating point operations.

Architectures involving multiple CPUs (multiple processor engines or processor cores), when these are used for data communication, i.e. for protocol processing.

References

Informative references

Attention is drawn to the following places, which may be of interest for search:

Arrangements for executing machine instructions	G06F 9/30
Concurrent instruction execution, e.g. pipelines	G06F 9/38

H04L 69/14

{Multichannel or multilink protocols}

Definition statement

This place covers:

Documents in which there exist multiple parallel channels or links between a sender and a receiver, to increase the bandwidth available or to increase the reliability of the communication.

References

Informative references

Attention is drawn to the following places, which may be of interest for search:

Selecting a network based on cost.	H04L 12/14
When a node is attached to two different networks (i.e. attached to the internet (packet switched), and to the PSTN (circuit switched)), and the information is sent to either one according to the nature of the information; network selection according to the information sent.	H04L 12/5691
Routing; multiple paths in the network.	H04L 45/24
When the network or path selection is made according to the security characteristics of the information (i.e. sending credit card info through the PSTN, and the rest of the transaction through the internet).	H04L 63/18
Wireless; selecting a network.	H04W 48/18
Wireless; selecting an access point.	H04W 48/20
Wireless; mobile (cordless) phones (terminals) with two or more interfaces to different networks (802.11/wifi and GSM/GPRS/UMTS, or 802.11/wifi and Bluetooth, for example); terminal devices adapted for operation in multiple networks; multi-mode terminals.	H04W 88/06

H04L 69/16

{Transmission control protocol/internet protocol [TCP/IP] or user datagram protocol [UDP] (transport layer addressing aspects H04L 61/6063; network layer protocol adaptations for supporting mobility, e.g. mobile IP, H04W 80/04; flow control or congestion control in data switching networks H04L 12/569; adapting video multiplex streams to a specific network H04N 21/2381; special adaptations of TCP, UDP or IP for interworking of IP based networks with other networks H04L 69/169)}

Definition statement

This place covers:

Adaptations to the standard protocols of the TCP/IP or UDP/IP Internet protocol suite.

The standards for TCP/IP are published in a series of documents called Requests for Comments (RFCs). RFCs are an evolving series of reports, proposals for protocols, and protocol standards that describe the internal workings of TCP/IP and the Internet.

Layer 3 - Network

The Internetwork Protocol (IP) as the network layer interface is responsible for routing, directing datagrams from one network to another. The network layer may have to break large datagrams, larger than MTU, into smaller packets and host receiving the packet will have to reassemble the fragmented datagram.

Layer 4 - Transport

Transport layer subdivides user-buffer into network-buffer sized datagrams and enforces desired transmission control. Two transport protocols, Transmission Control Protocol (TCP) and User Datagram Protocol (UDP), sits at the transport layer. Reliability and speed are the primary difference between these two protocols.

TCP establishes connections between two hosts on the network through 'sockets' which are determined by the IP address and port number. TCP keeps track of the packet delivery order and the packets that must be resent. Maintaining this information for each connection makes TCP a stateful protocol.

UDP on the other hand provides a low overhead transmission service, but with less error checking.

References

Limiting references

This place does not cover:

Flow control in data switching networks in general	H04L 12/569
transport layer addressing aspects	H04L 61/6063
Special adaptations of TCP, UDP or IP for interworking of IP based networks with other networks	H04L 69/169
special adaptations of TCP, UDP or IP for interworking of IP based networks with other networks	H04L 69/169
Network layer protocol adaptations for supporting mobility, e.g. mobile IP	H04W 80/04

Informative references

Attention is drawn to the following places, which may be of interest for search:

Adapting video multiplex streams to a specific network	H04N 21/2381

Special rules of classification

The mere use of the TCP/IP, UDP protocol suite for implementing communication based applications/ services is not classified under this subgroup.

This group is a protocol-centric classification entry for a broadly used protocol in packet data networks. Some of the functions carried out by said protocol are classified generically somewhere else. In these cases, double classification is performed according to the function and to the specific protocol.

Glossary of terms

In this place, the following terms or expressions are used with the meaning indicated:

TCP	Transmission Control Protocol; RFC 793 – Transmission Control Protocol
IP	Internet Protocol ; RFC 791 – Internet Protocol ; RFC 2460 – Internet Protocol, Version 6 (IPv6) Specification
UDP	User Datagram Protocol; RFC 768 – User Datagram Protocol; RFC 4113 – Management Information Base for the UDP; RFC 5405 – Unicast UDP Usage Guidelines for Application Designers
OSI	Open System Interconnection; standard model for networking protocols and distributed applications; ISO standard for worldwide communications that defines a networking framework for implementing protocols in seven layers. Control is passed from one layer to the next, starting at the application layer in one station, proceeding to the bottom layer, over the channel to the next station and back up the hierarchy.

H04L 69/161

{Implementation details of TCP/IP or UDP/IP stack architecture; Specification of modified or new header fields (protocols engines in general H04L 69/12; OSI stack based layering aspects H04L 69/32; protocol header analysis in general H04L 69/22; addressing aspects in multiple interfaces involving dual-stack hosts H04L 61/6086)}

Definition statement

This place covers:

Arrangements to implement the TCP, UDP or IP protocols at network nodes (mainly at end terminals) and proposed modifications of the TCP, UDP or IP protocol headers to enhance or improve the protocol functionalities (e.g. EP1187015, EP0909076).

References

Limiting references

This place does not cover:

Specification of modified or new header fields (protocols engines in general	H04L 61/6086

Informative references

Attention is drawn to the following places, which may be of interest for search:

Protocol engines in general	H04L 69/12
Protocol header analysis in general	H04L 69/22
OSI stack based layering aspects	H04L 69/32

Special rules of classification

TCP, UDP and IP protocol implementation aspects are classified in this subgroup and in H04L 69/12. TCP, UDP and IP headers aspects are classified in this group and in H04L 69/22.

H04L 69/162

{involving adaptations of sockets based mechanisms (secure socket layer H04L 63/168)}

References

Limiting references

This place does not cover:

Secure socket layer	H04L 63/168
Application session management for sessions established over TCP/UDP sockets	H04L 67/14

H04L 69/163

{Adaptation of TCP data exchange control procedures (generic OSI layer 4 protocols, e.g. SCTP H04L 69/326; TCP or UDP flow control procedures H04L 47/19; error control procedures in general H04L 1/18)}

Definition statement

This place covers:

Control procedures for all functions performed by the TCP transport protocol, e.g. flow control and error control. Only TCP specific mechanisms.

References

Informative references

Attention is drawn to the following places, which may be of interest for search:

Error control procedures in general	H04L 1/18
TCP or UDP flow control procedures	H04L 47/19
Generic OSI layer 4 protocols (if not classified somewhere else), e.g. SCTP	H04L 69/326

Special rules of classification

TCP specific flow control mechanisms are classified in this subgroup and in H04L 47/19 . TCP specific error control mechanisms are classified in this group and in H04L 1/18.

H04L 69/164

{Adaptation or special uses of UDP protocol}

Definition statement

This place covers:

UDP related aspects and non-trivial use of the UDP protocol.

References

Limiting references

This place does not cover:

Combined or selective use of TCP and UDP	H04L 69/165

H04L 69/165

{involving combined use or selection criteria between TCP and UDP protocols (multi-protocol arrangements in general H04L 69/18; multilink protocols in general H04L 69/14)}

Definition statement

This place covers:

Simultaneous use of the two protocols or selective use of one of them according to some criteria.

References

Informative references

Attention is drawn to the following places, which may be of interest for search:

Multilink protocols in general	H04L 69/14
Multi-protocol arrangements in general	H04L 69/18

H04L 69/166

{IP fragmentation or TCP segmentation aspects (evaluation of maximum transfer unit [MTU] H04L 47/36; assembly or disassembly of packets in wireless networks H04W 28/065)}

Definition statement

This place covers:

Special arrangements involving IP fragmentation or TCP segmentation.

References

Informative references

Attention is drawn to the following places, which may be of interest for search:

Evaluation of maximum transfer unit (MTU)	H04L 47/36
Assembly or disassembly of packets in wireless networks	H04W 28/065

H04L 69/167

{Transitional provisions between IPv4 and IPv6 (address translation between IPv4 and IPv6 H04L 61/251; involvement of different protocol versions in wireless network layer protocols, e.g. MIPv4 and MIPv6 H04W 80/045)}

Definition statement

This place covers:

Arrangements to allow transitional interoperability between IPv4 and IPv6 protocols.

References

Limiting references

This place does not cover:

Address translation between IPv4 and IPv6	H04L 61/251
Involvement of different protocol versions in wireless network layer protocols, e.g. MIPv4 and MIPv6	H04W 80/045

Synonyms and Keywords

IPng	alternative designation for IPv6

H04L 69/168

{Special adaptations of TCP, UDP or IP to match specific link layer protocols, e.g. ATM, SONET or PPP (IP over ATM H04L 2012/5667; special adaptation of TCP protocol for wireless media H04W 80/06)}

Definition statement

This place covers:

Provisions to improve interrelation between TCP, UDP or IP and the lower layer protocols carrying them. Provisions being either at the TCP, UDP, IP or at the carrier protocol (e.g. EP0989711).

References

Limiting references

This place does not cover:

IP fragmentation and TCP segmentation	H04L 69/166
IP over ATM	H04Q 11/0478
Special adaptation of TCP protocol for wireless media	H04W 80/06

Informative references

Attention is drawn to the following places, which may be of interest for search:

OSI Layer 2 protocol provisions in general	H04L 69/324

H04L 69/169

{Special adaptations of TCP, UDP or IP for interworking of IP based networks with other networks (protocols for interworking in general H04L 69/08)}

Definition statement

This place covers:

Interworking arrangements to allow/enhance interoperability between TCP, UDP or IP protocols and other network protocols, e.g. SS7.

It does not cover mere inter-networking scenarios without special protocol adaptations (i.e. standard gateway provisions).

References

Informative references

Attention is drawn to the following places, which may be of interest for search:

Protocols for interworking in general, protocol translation	H04L 69/08

Special rules of classification

Interworking/conversion between TCP,UDP or IP protocols and other network protocols is classified in this subgroup and in H04L 69/08.

H04L 69/18

{Multi-protocol handler, e.g. single device capable of handling multiple protocols (multilayer or multiprotocol switches H04L 49/602)}

Definition statement

This place covers:

Network nodes, Network Interface Cards (NIC) capable of handling more than one protocol; or where the protocol can be dynamically adapted.

References

Informative references

Attention is drawn to the following places, which may be of interest for search:

Selecting a network based on cost	H04L 12/14
When a node is attached to two different networks (i.e. attached to the internet (packet switched), and to the PSTN (circuit switched)), and the information is sent to either one according to the nature of the information; network selection according to the information sent	H04L 12/5691
Routing; multiple paths in the network	H04L 45/24
When the network or path selection is made according to the security characteristics of the information (i.e. sending credit card info through the PSTN, and the rest of the transaction through the internet)	H04L 63/18
Downloading of software, including protocol functionality	H04L 67/34
Wireless; selecting a network	H04W 48/18
Wireless; selecting an access point	H04W 48/20

Wireless; mobile (cordless) phones (terminals) with two or more interfaces to different networks (802.11/wifi and GSM/GPRS/UMTS, or 802.11/wifi and Bluetooth, for example); terminal devices adapted for operation in multiple networks; multi-mode terminals	H04W 88/06

H04L 69/22

{Header parsing or analysis (traffic monitoring by flow aggregation or filtering H04L 12/2605; flow identification in packet switching networks H04L 47/2483)}

Definition statement

This place covers:

- Parsing and analysis of the of the information contained in the packet headers, within the network adapter (NIC), but also within the routers;
- Prediction of the contents of the header within the same stream;
- Header compression;
- Simplified header processing;
- Packet classification;
- Separating the header from the rest of the packet, for more efficient handling;
- High speed memories to place the header.

References

Limiting references

This place does not cover:

traffic monitoring by flow aggregation or filtering	H04L 12/2605

Informative references

Attention is drawn to the following places, which may be of interest for search:

Traffic monitoring by flow aggregation or filtering	H04L 12/2605
Separate storage for different parts of the packet, e.g. header and payload	H04L 49/9042
Protocols for data compression; header compression	H04L 69/04
Wireless; optimizing, header compression	H04W 28/06

H04L 69/24

{Negotiation of communication capabilities}

Definition statement

This place covers:

Negotiation of communication capabilities, like communication bandwidth, speed, common protocol or protocol version, etc..., at call set-up or during the communication.

References

Informative references

Attention is drawn to the following places, which may be of interest for search:

Multimedia communications. Signalling or session protocols	H04L 65/1003
Multimedia communications. Session control; session set-up; in-session procedures	H04L 65/1066; H04L 65/1069; H04L 65/1083
Arrangements for connection and session management, call setup	H04L 67/14
Arrangements for service discovery	H04L 67/16

H04L 69/26

{Special purpose or proprietary protocols or architectures (network applications for proprietary or special purpose networking environments H04L 67/12)}

Definition statement

This place covers:

Special purpose or proprietary protocols or architectures.

References

Informative references

Attention is drawn to the following places, which may be of interest for search:

Network applications for proprietary or special purpose networking environments	H04L 67/12

H04L 69/28

{Timer mechanisms used in protocols}

Definition statement

This place covers:

Timer mechanisms used in protocols.

H04L 69/30

{Definitions, standards or architectural aspects of layered protocol stacks}

Definition statement

This place covers:

Definitions, standards or architectural aspects of layered protocol stacks.

Interfaces between layers (i.e. vertical interfaces across the protocol stack, between layer n and layer n+/-1).

Offloading or shifting processing that belongs to one layer to another layer, or from the host processor to the network adapter, network interface card.

Interfaces between the protocol stack and the operating system software (i.e. device drives for networking).

General documents about layering.

General documents about OSI standards.

Multiplexing/demultiplexing of several layer n connections into one layer (n-1) connection.

References

Informative references

Attention is drawn to the following places, which may be of interest for search:

Data storage and handling aspects for data "in transit" between the network and the host. The functions classified here are normally physically located in what is known as network adapter, network interface unit, or network card. This group contains functions like buffering of data in the network adapter, data descriptors, input and output queues, priority queues, signalling between the network adapter and the host (like interrupt generation and handling when a packet is received, early warning interrupts, and so on)	H04L 12/5694
The TCP/IP protocol stack	H04L 69/16
Computers. Operating Systems. Inter-task communication	G06F 9/54
Computers. Interconnection or transfer of information between memories, I/O devices, and CPUs	G06F 13/00
Program control for peripheral devices, i.e. device drivers	G06F 13/102
Direct Memory Access (DMA); burst mode transfer	G06F 13/28
Inter-processor communication in combinations of two or more computers, using an interconnection network	G06F 15/173
Multiplexing in general	H04J

H04L 69/32

{High level architectural aspects of 7-layer open systems interconnection [OSI] type protocol stacks}

Definition statement

This place covers:

High level architectural aspects of 7-layer Open Systems Interconnection (OSI) type protocol stacks.

H04L 69/321

{Aspects of inter-layer communication protocols or service data unit [SDU] definitions; Interfaces between layers}

Definition statement

This place covers:

Aspects of inter-layer communication protocols or Service Data Unit (SDU) definitions in 7-layer Open Systems Interconnection (OSI) type protocol stacks; Interfaces between layers.

H04L 69/322

{Aspects of intra-layer communication protocols among peer entities or protocol data unit [PDU] definitions}

Definition statement

This place covers:

Aspects of intra-layer communication protocols among peer entities or Protocol Data Unit (PDU) definitions in 7-layer Open Systems Interconnection (OSI) type protocol stacks.

H04L 69/323

{in the physical layer, i.e. layer one (arrangements for detecting or preventing errors in the information received H04L 1/00; baseband systems H04L 25/00; modulated-carrier systems H04L 27/00)}

Definition statement

This place covers:

The protocols of the 1st layer of the ISO-OSI model, that is, the Physical Layer.

References

Informative references

Attention is drawn to the following places, which may be of interest for search:

Arrangements for detecting or preventing errors in the information received	H04L 1/00
Baseband systems	H04L 25/00
Modulated carrier systems	H04L 27/00

H04L 69/324

{in the data link layer, i.e. layer two, e.g. HDLC (arrangements for detecting or preventing errors in the information received H04L 1/00; bus networks H04L 12/40)}

Definition statement

This place covers:

The protocols of the 2nd layer of the ISO-OSI model, that is, the Link Layer.

The framing of packets (delimiting of the start and the end of the packet).

Generation and checking of CRCs.

Segmenting and reassembling of (variable length) packets in shorter (either fixed or variable length) cells or transmission units.

Sequencing the packets (i.e. generating identifiers like sequence numbers at the sender, and ordering them in a particular sequence at the receiver).

Checking for missing packets, acknowledging received packets, resending packets after a time interval when no acknowledge is received.

References

Informative references

Attention is drawn to the following places, which may be of interest for search:

Arrangements for detecting or preventing errors in the information received	H04L 1/00
Bus networks	H04L 12/40
Loop networks	H04L 12/42
Star networks	H04L 12/44
Flow control	H04L 12/569
Wireless networks	H04W

H04L 69/325

{in the network layer, i.e. layer three, e.g. X.25 (packet switching systems, packet routing H04L 12/5689; TCP/IP H04L 69/16)}

Definition statement

This place covers:

The protocols of the 3rd layer of the ISO-OSI model, that is, the Network Layer.

References

Limiting references

This place does not cover:

Packet switching systems, packet routing	H04L 12/56

Informative references

Attention is drawn to the following places, which may be of interest for search:

Transmission Control Protocol/Internet Protocol, TCP/IP	H04L 69/16

H04L 69/326

{in the transport layer, i.e. layer four (TCP/IP H04L 69/16; streaming protocols, e.g. RTP, H04L 65/608)}

Definition statement

This place covers:

The protocols of the 4th layer of the ISO-OSI model, that is, the Link Layer.

Generation and checking of CRCs.

Segmenting and reassembling of (variable length) packets in shorter (either fixed or variable length) cells or transmission units.

Sequencing the packets (i.e. generating identifiers like sequence numbers at the sender, and ordering them in a particular sequence at the receiver).

Checking for missing packets, acknowledging received packets, resending packets after a time interval when no acknowledge is received.

References

Informative references

Attention is drawn to the following places, which may be of interest for search:

Streaming protocols, e.g. RTP	H04L 65/608
Transmission Control Protocol/Internet Protocol, TCP/IP	H04L 69/16

H04L 69/327

{in the session layer, i.e. layer five (session initiation protocol H04L 65/1006; session control in real time communications H04L 65/1066; arrangements for session management H04L 67/14)}

Definition statement

This place covers:

The protocols of the 5th layer of the ISO-OSI model, that is, the Session Layer.

References

Informative references

Attention is drawn to the following places, which may be of interest for search:

Session Initiation Protocol [SIP]	H04L 65/1006
Session control in real time communications	H04L 65/1066
Arrangements for session management	H04L 67/14

H04L 69/328

{in the presentation layer, i.e. layer six (graphical user interfaces G06F 3/048; terminal emulation, e.g. telnet, H04L 67/08)}

Definition statement

This place covers:

The protocols of the 6th layer of the ISO-OSI model, that is, the Presentation Layer.

References

Limiting references

This place does not cover:

Graphical user interfaces	G06F 3/08

Informative references

Attention is drawn to the following places, which may be of interest for search:

Terminal emulation, e.g. Telnet	H04L 67/08

H04L 69/329

{in the application layer, i.e. layer seven (network arrangements or network communication protocols for networked applications H04L 67/00; digital computing or data processing equipment or methods, specially adapted for specific applications G06F 19/00; data processing systems and methods specially adapted for administrative, commercial, financial or managerial purposes G06Q)}

Definition statement

This place covers:

This entry has been created for completeness. Documents about the 7th layer of the ISO-OSI model are classified in H04L 67/00

Relationships with other classification places

Networked applications: H04L 67/00

Digital computing or data processing equipment or methods, specially adapted for specific applications G06F 19/00;

Data processing systems and methods specially adapted for administrative, commercial, financial or managerial purposes G06Q

References

Limiting references

This place does not cover:

network arrangements or network communication protocols for networked applications	H04L 67/00
digital computing or data processing equipment or methods, specially adapted for specific applications	G06F 19/00
data processing systems and methods specially adapted for administrative, commercial, financial or managerial purposes	G06Q

H04L 69/40

{Techniques for recovering from a failure of a protocol instance or entity, e.g. failover routines, service redundancy protocols, protocol state redundancy or protocol service redirection in case of a failure or disaster recovery (reactions to failures of replicated servers by a load balancer H04L 67/1034; departure or maintenance mechanisms in peer-to-peer networks H04L 67/1048; intermediate processing of operational support to end devices when they are unavailable, H04L 67/2861; network fault management H04L 12/2419; route fault recovery in network routing H04L 45/28; fault recovery in packet switches H04L 49/557)}

Definition statement

This place covers:

Techniques for recovering from failure of a protocol instance or entity, e.g. failover routines, service redundancy protocols, protocol state redundancy, protocol service redirection in case of failure, disaster recovery.

References

Limiting references

This place does not cover:

Network fault management	H04L 12/2419
Route fault recovery in network routing	H04L 45/28
Fault recovery in packet switches	H04L 49/557

Informative references

Attention is drawn to the following places, which may be of interest for search:

Reactions to failures of replicated servers by a load balancer	H04L 67/1034
Departure or maintenance mechanisms in Peer-to Peer networks	H04L 67/1048
Intermediate processing of operational support to end device when they are unavailable	H04L 67/2861