H01R

LINE CONNECTORS; CURRENT COLLECTORS (switches, fuses H01H; coupling devices of the waveguide type H01P 5/00; switching arrangements for the supply or distribution of electric power H02B; installations of electric lines, cables or auxiliary apparatus H02G; printed means for providing electric connections to or between printed circuits H05K)

Definition statement

This place covers:

all kinds of contact-making disconnectible and non-disconnectible electric line connectors, coupling devices, lamp or similar holders or current collectors for all kinds of electric lines, cables or apparatus;

non-printed means for electric connections to or between printed circuits.

Relationships with other classification places

This subclass does not cover mounting of connections in or on specified apparatus. Such mounting is covered by the relevant subclass for such apparatus, e.g. mounting in junction or distribution boxes is covered by subclass H02B or H02G, high-temperature connections for heating elements is covered by group H05B 3/08. Structural association of one part of a coupling device with specific electric apparatus is classified with the apparatus, e.g. association of cap with incandescent lamp is covered by subclass H01K.

References

Limiting references

This place does not cover:

Switches, fuses	H01H
Coupling devices of the waveguide type	H01P 5/00
Switching arrangements for the supply or distribution of electric power	H02B
Installations of electric lines, cables or auxiliary apparatus	H02G
Printed means for providing electric connections to or between printed circuits	H05K

Informative references

Attention is drawn to the following places, which may be of interest for search:

Semiconductor devices	H01L

Special rules of classification

In this subclass, a contact in a coupling device is only regarded as an additional earth contact if this contact is clearly designed for that purpose. General details are classified in groups H01R 4/00, H01R 9/00, H01R 11/00.

Glossary of terms

In this place, the following terms or expressions are used with the meaning indicated:

Pin	rigid or flexible conductor for engagement with an appropriately shaped socket to establish contact therewith

Socket	rigid or flexible conductor for receiving an appropriate pin to establish electrical contact therewith
Coupling devices	devices having two or more parts specially adapted so as to be capable of ready and repeated physical engagement or disengagement, without the use of a tool, for the purpose of establishing or breaking an electrical path. Examples of such devices having more than two parts are: a) adapters for linking two coupling parts; and b) rails or bus-bars provided with a plurality of discrete connecting locations for counterparts

H01R 3/00

Electrically-conductive connections not otherwise provided for

Definition statement

This place covers:

Fixed connections types which are not foreseen elsewhere in H01R.

H01R 3/08

for making connection to a liquid ({slip rings with liquid contacts H01R 39/30; H01R 39/646}; electrodes for batteries or accumulators H01M)

References

Limiting references

This place does not cover:

Slip rings with liquid contacts	H01R 39/30; H01R 39/646;

Informative references

Attention is drawn to the following places, which may be of interest for search:

Electrodes for batteries or accumulators	H01M

H01R 4/00

Electrically-conductive connections between two or more conductive members in direct contact and means for effecting or maintaining such contact (details of disengageable contacts of two-part coupling devices H01R 13/00; two-part coupling devices H01R 12/70, H01R 24/00 - H01R 33/00; flexible or turnable line connectors H01R 35/00; non rotary current collectors H01R 41/00)

Definition statement

This place covers:

Fixed connections, e.g. soldered, welded, spliced;

Direct connections between conductors and conductive members of coupling; Insulation-penetrating

References

Limiting references

This place does not cover:

Two-part coupling devices	H01R 12/70, H01R 24/00 - H01R 33/00;
Details of disengageable contacts of two-part coupling devices	H01R 13/00;
Flexible or turnable line connectors	H01R 35/00;
Non rotary current collectors	H01R 41/00

H01R 4/02

Soldered or welded connections {(H01R 4/625, H01R 4/723, H01R 12/59 take precedence)}

References

Limiting references

This place does not cover:

Soldered or welded connections between conductors of different materials	H01R 4/625
Making a soldered electrical connection simultaneously with the heat shrinking	H01R 4/723
Flexible printed circuits, flat or ribbon cables or like structures	H01R 12/59

H01R 4/029

{Welded connections (H01R 4/021 - H01R 4/028 take precedence)}

References

Limiting references

This place does not cover:

Soldered or welded connections between two or more cables or wires	H01R 4/021
Soldered or welded connections between cables or wires and terminal	H01R 4/023
Soldered or welded connections with built-in heat generating elements	H01R 4/025
Soldered or welded connections comprising means for eliminating an insulative layer prior to soldering or welding	H01R 4/026
Soldered or welded connections comprising means for positioning or holding the parts to be soldered or welded	H01R 4/027
Soldered or welded connections comprising means for preventing flowing or wicking of solder or flux in parts not desired	H01R 4/028

H01R 4/06

Riveted connections (by explosion H01R 4/08)

Definition statement

This place covers:

Illustrative example of subject matter classified in H01R 4/06: flatconductor cable (21,17) is connected to conductive member (9) via riveted structure (5):

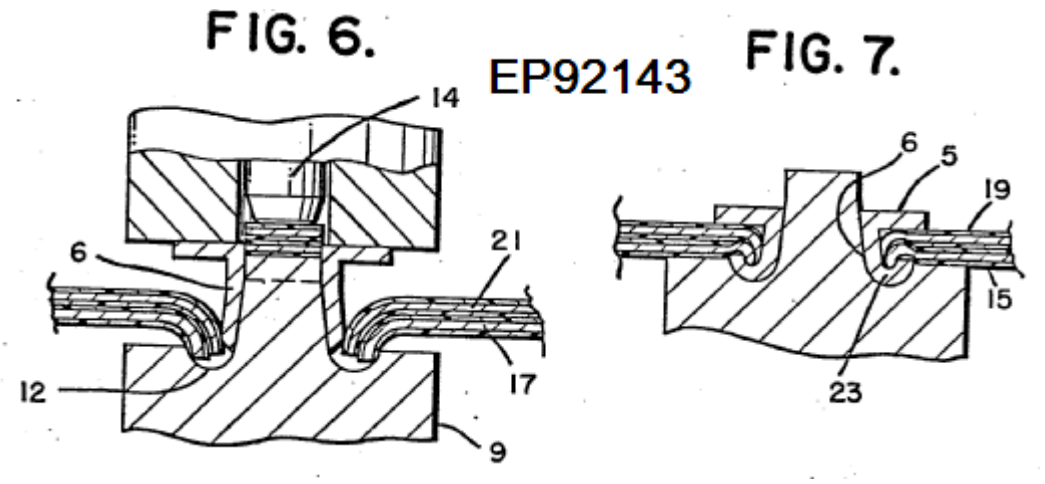

References

Limiting references

This place does not cover:

Riveted connections by explosion	H01R 4/08

H01R 4/12

by twisting

Definition statement

This place covers:

Illustrative example of subject matter classified in H01R 4/12: twisted cables (12) using element (3) for twisting:

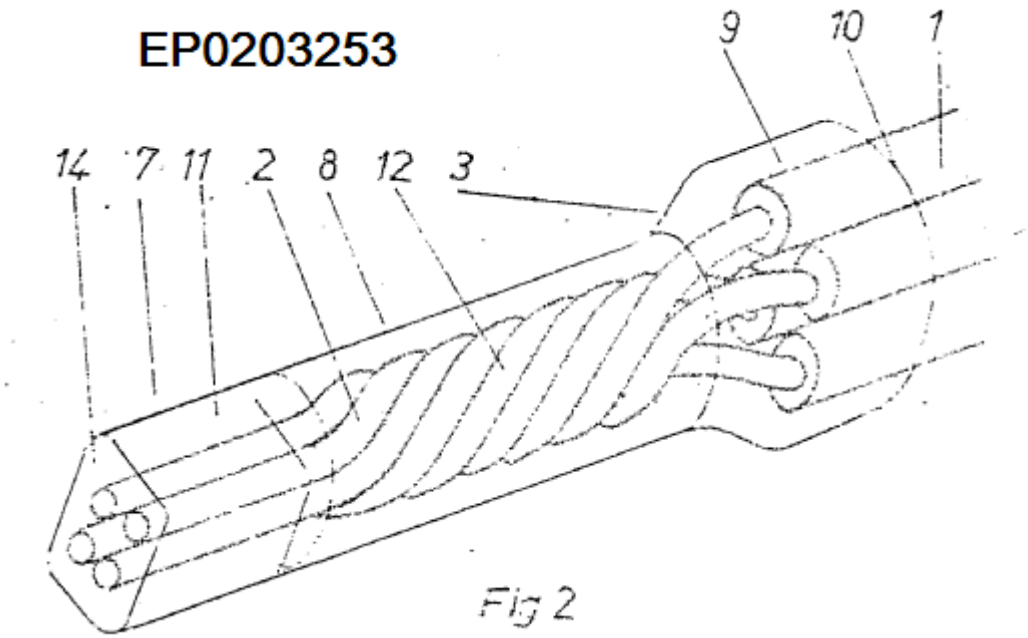

H01R 4/14

by wrapping

Definition statement

This place covers:

Illustrative example of subject matter classified in H01R 4/14: terminals (106) and (107) are connected via wrapped around wire (108):

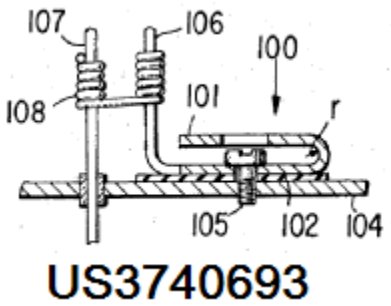

H01R 4/16

by bending

Definition statement

This place covers:

Illustrative example of subject matter classified in H01R 4/16: wire (5) is connected to an conductor plate (31) using press bits (43):

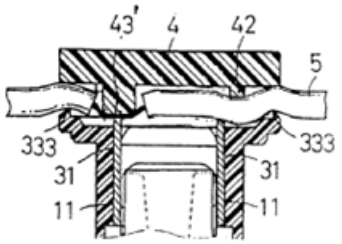

WO9416480

H01R 4/18

by crimping {(H01R 4/01, H01R 4/2495 take precedence; for coaxial cables H01R 9/0518)}

References

Limiting references

This place does not cover:

Connections using shape memory materials	H01R 4/01
Insulation penetration combined with permanent deformation of contact member	H01R 4/2495
Crimping for coaxial cables	H01R 9/0518

H01R 4/182

{for flat conductive elements, e.g. flat cables (H01R 4/01 takes precedence)}

References

Limiting references

This place does not cover:

Connections using shape memory materials	H01R 4/01

H01R 4/183

{for cylindrical elongated bodies, e.g. cables having circular cross-section (H01R 4/01 takes precedence)}

References

Limiting references

This place does not cover:

Connections using shape memory materials	H01R 4/01

H01R 4/185

{combined with a U-shaped insulation-receiving portion}

Definition statement

This place covers:

Illustrative example of subject matter classified in H01R 4/185

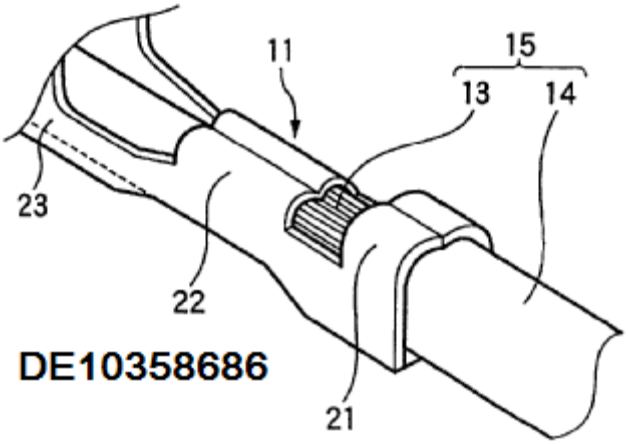

H01R 4/20

using a crimping sleeve {(H01R 4/01 takes precedence)}

References

Limiting references

This place does not cover:

Connections using shape memory materials	H01R 4/01

H01R 4/22

End caps, i.e. of insulating or conductive material for covering or maintaining connections between wires entering the cap from the same end

Definition statement

This place covers:

Illustrative example of subject matter classified in H01R 4/22

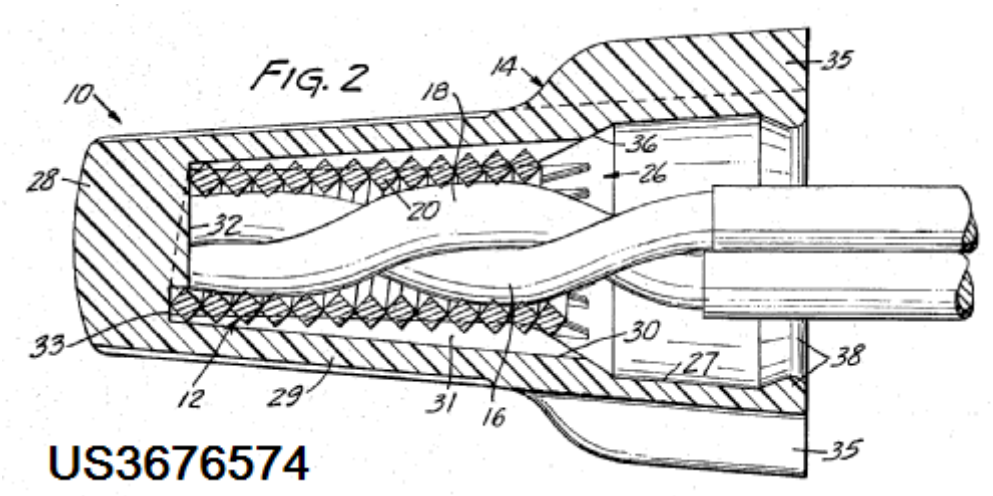

H01R 4/24

Needle-point, slotted plate, or analogous contact members penetrating insulation or cable strands {(for multiphase cables H01R 9/031; for coaxial cables H01R 9/053; for flat cables H01R 12/67)}

References

Limiting references

This place does not cover:

For multiphase cables	H01R 9/031
For coaxial cables	H01R 9/053
For flat cables	H01R 12/67

H01R 4/2404

{having at least one tooth, prong, pin or needle penetrating the insulation (penetration into a wire end in axial direction H01R 4/5033)}

References

Limiting references

This place does not cover:

Penetration into a wire end in axial direction	H01R 4/5033

H01R 4/2408

{actuated by means of at least one clamping screw (clamped connection using a screw H01R 4/30)}

References

Limiting references

This place does not cover:

Clamped connection using a screw	H01R 4/30

H01R 4/2425

{flat plate; multi-layered flat plate}

Definition statement

This place covers:

Illustrative example of subject matter classified in H01R 4/2425

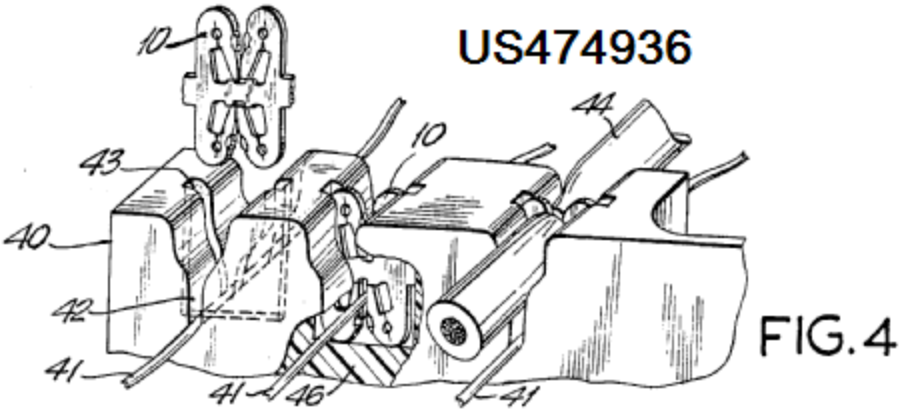

H01R 4/2462

{the contact member having a slotted bent configuration, e.g. slotted bight}

Definition statement

This place covers:

Illustrative example of subject matter classified in H01R 4/2462

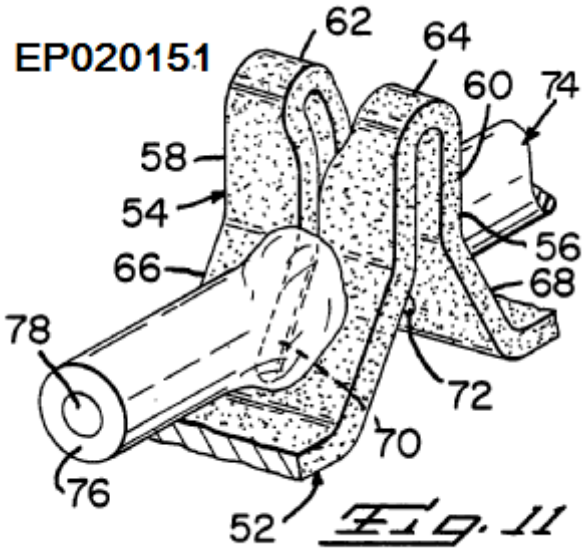

H01R 4/26

Connections in which at least one of the connecting parts has projections which bite into or engage the other connecting part in order to improve the contact ({H01R 4/188, H01R 4/203, H01R 4/5075 take precedence}; using shape memory materials H01R 4/01)

Definition statement

This place covers:

Illustrative example of subject matter classified in H01R 4/26

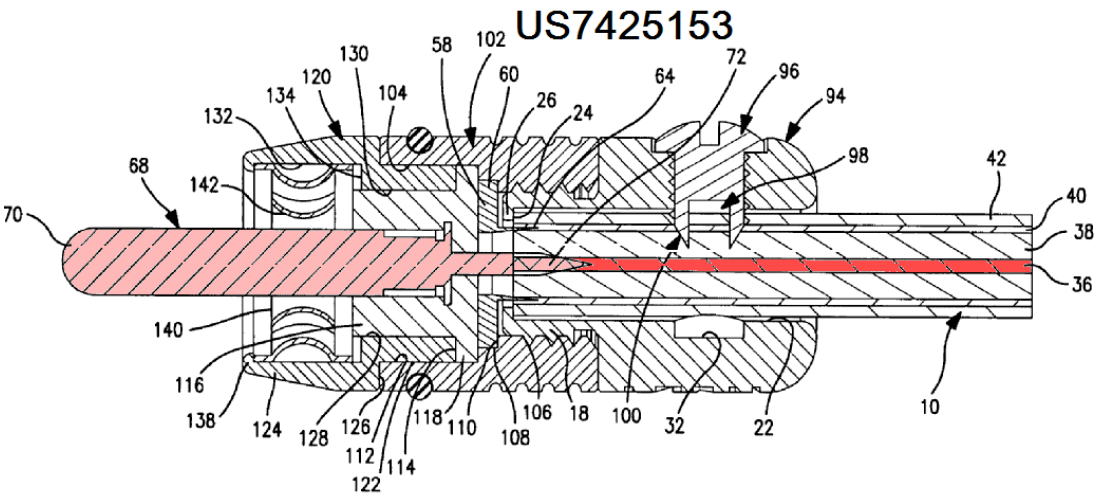

References

Limiting references

This place does not cover:

Using shape memory materials	H01R 4/01

H01R 4/28

Clamped connections, spring connections (made by means of terminals specially adapted for contact with, or insertion into, printed circuits H01R 12/00)

References

Limiting references

This place does not cover:

Connections made by means of terminals specially adapted for contact with, or insertion into, printed circuits	H01R 12/00

H01R 4/30

utilising a screw or nut clamping member (H01R 4/50 takes precedence; utilising a clamping member acted on by screw or nut H01R 4/38; {for coaxial cables H01R 9/0521})

References

Limiting references

This place does not cover:

Utilising a clamping member acted on by screw or nut	H01R 4/38
Clamped connections, spring connections utilising a cam, wedge, cone or ball, also combined with a screw	H01R 4/50
For coaxial cables	H01R 9/0521

H01R 4/301

{having means for preventing complete unscrewing of screw or nut (measures against loss of bolt or nut in general F16B 41/002)}

References

Limiting references

This place does not cover:

Measures against loss of bolt or nut in general	F16B 41/002

H01R 4/302

{having means for preventing loosening of screw or nut, e.g. vibration-proof connection (locking of screw or nut in general F16B 39/00 and subgroups)}

Definition statement

This place covers:

Illustrative example of subject matter classified in H01R 4/302

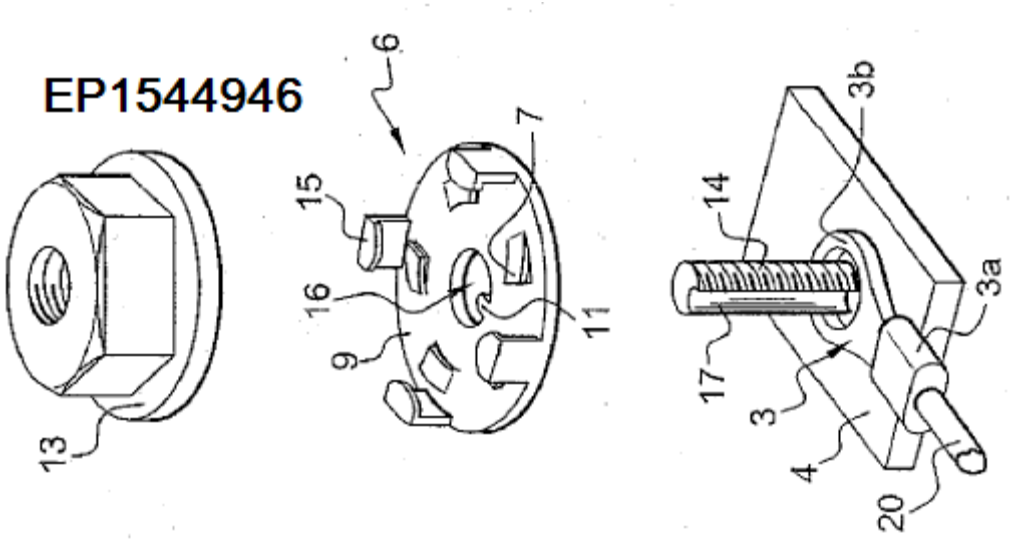

References

Informative references

Attention is drawn to the following places, which may be of interest for search:

Locking of screw or nut in general	F16B 39/00

H01R 4/307

{characterised by the thread of the screw or nut (shapes of thread, special thread forms F16B 33/02)}

References

Informative references

Attention is drawn to the following places, which may be of interest for search:

Shapes of thread, special thread forms	F16B 33/02

H01R 4/38

utilising a clamping member acted on by screw or nut (H01R 4/50 takes precedence)

References

Limiting references

This place does not cover:

Clamped connections, spring connections utilising a cam, wedge, cone or ball, also combined with a screw	H01R 4/50

H01R 4/44

Clamping areas on both sides of screw

Definition statement

This place covers:

Illustrative example of subject matter classified in H01R 4/44

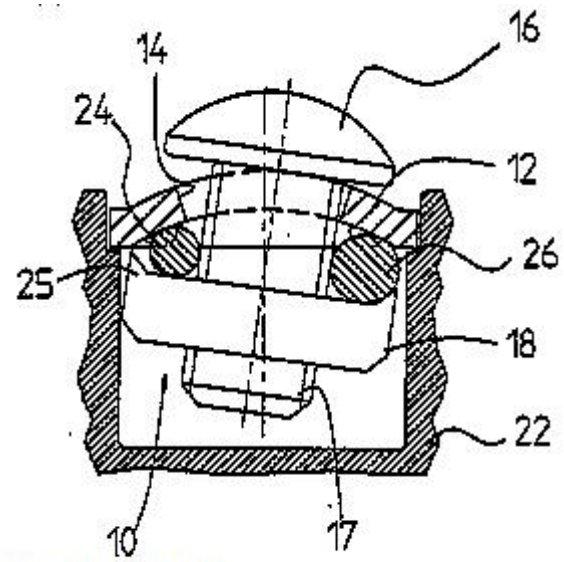

DE19746240 FIG.2

H01R 4/48

utilising a spring, clip, or other resilient member (H01R 4/52 takes precedence)

References

Limiting references

This place does not cover:

Clamped connections, spring connections utilising a cam, wedge, cone or ball, which is spring loaded	H01R 4/52

H01R 4/4827

{with an opening in the housing for insertion of a release tool}

Definition statement

This place covers:

Illustrative example of subject matter classified in H01R 4/4827

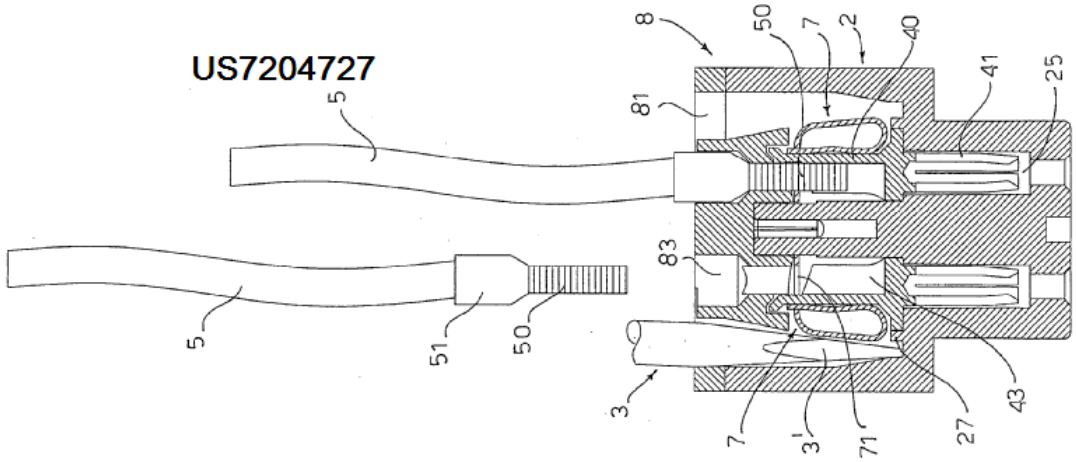

H01R 4/505

{using an excentric element}

Definition statement

This place covers:

Illustrative example of subject matter classified in H01R 4/505

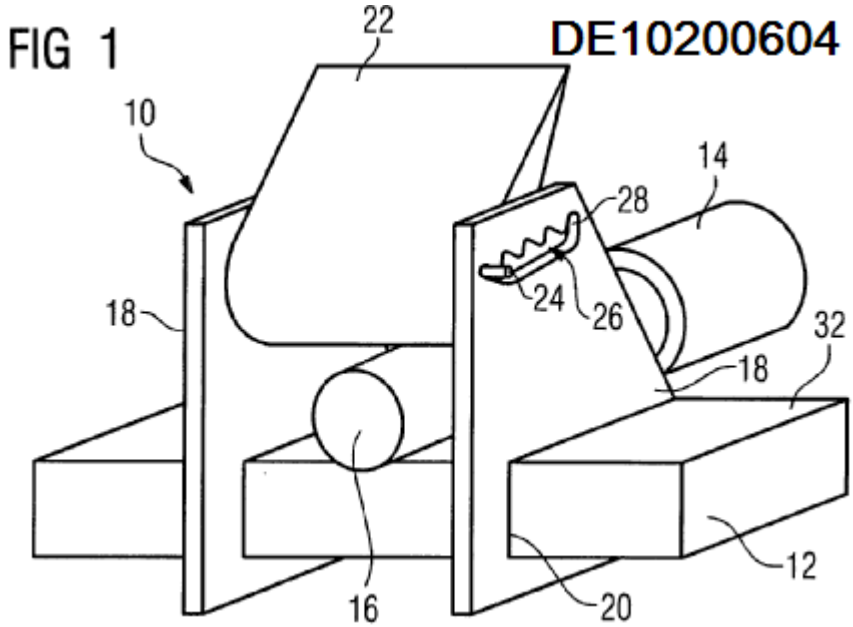

H01R 4/56

One conductor screwing into another

Definition statement

This place covers:

Illustrative example of subject matter classified in H01R 4/56

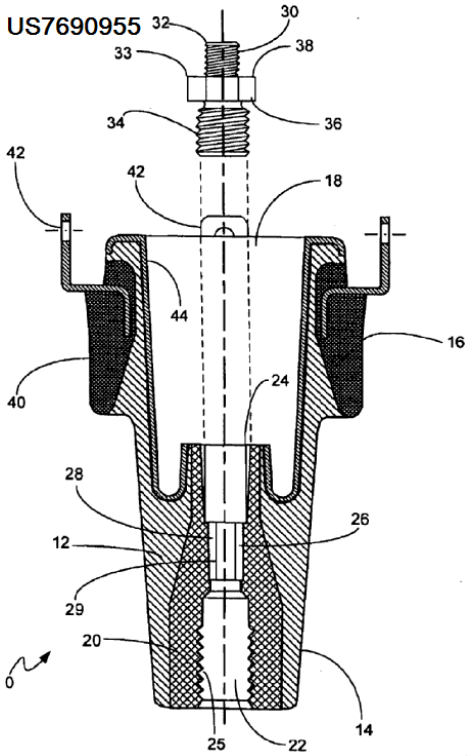

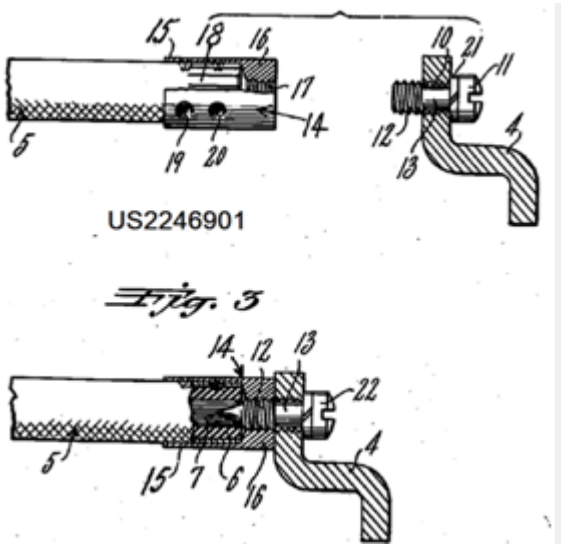

H01R 4/58

characterised by the form or material of the contacting members (H01R 4/01 takes precedence)

Definition statement

This place covers:

Illustrative example of subject matter classified in H01R 4/58

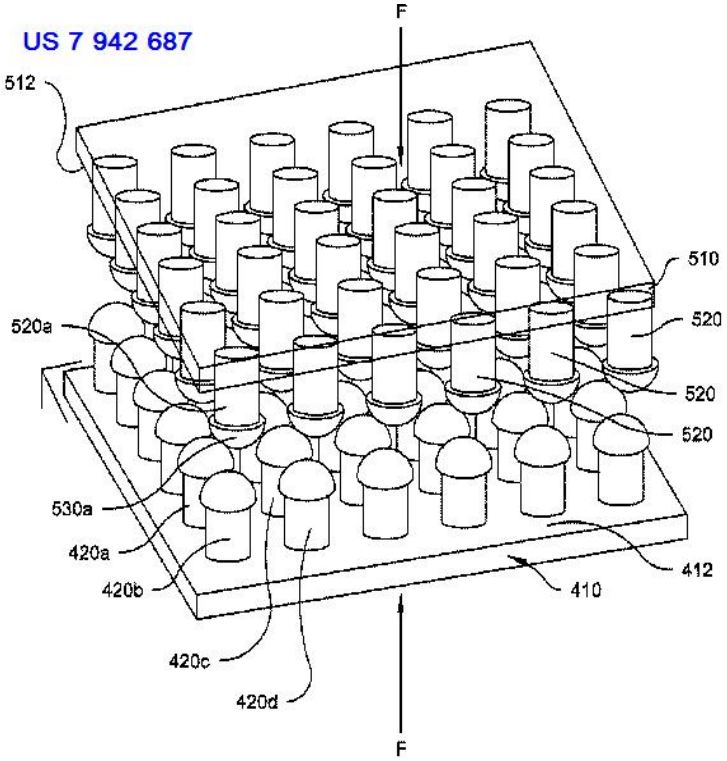

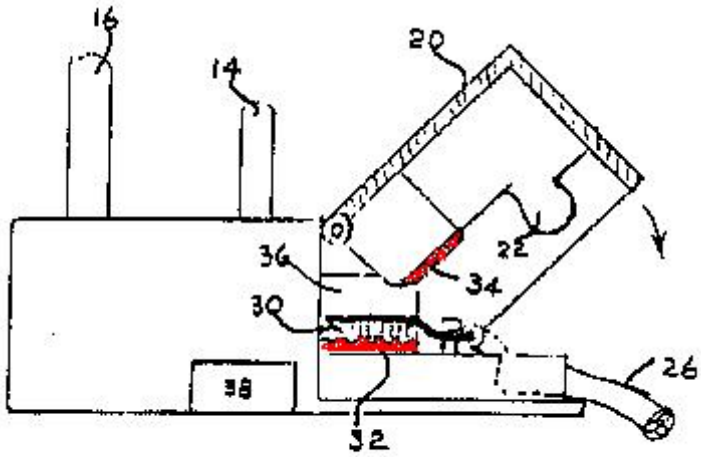

Conductive hook-and-loop strip (32,34)

GB2256977

References

Limiting references

This place does not cover:

Using shape memory materials	H01R 4/01

H01R 4/60

Connections between or with tubular conductors (H01R 4/56 takes precedence)

References

Limiting references

This place does not cover:

One conductor screwing into another	H01R 4/56

H01R 4/62

Connections between conductors of different materials; Connections between or with aluminium or steel-core aluminium conductors (H01R 4/68 takes precedence)

References

Limiting references

This place does not cover:

Connections to or between superconductive connectors	H01R 4/68

H01R 4/66

Connections with the terrestrial mass, e.g. earth plate, earth pin

Definition statement

This place covers:

Illustrative example of subject matter classified in H01R 4/66

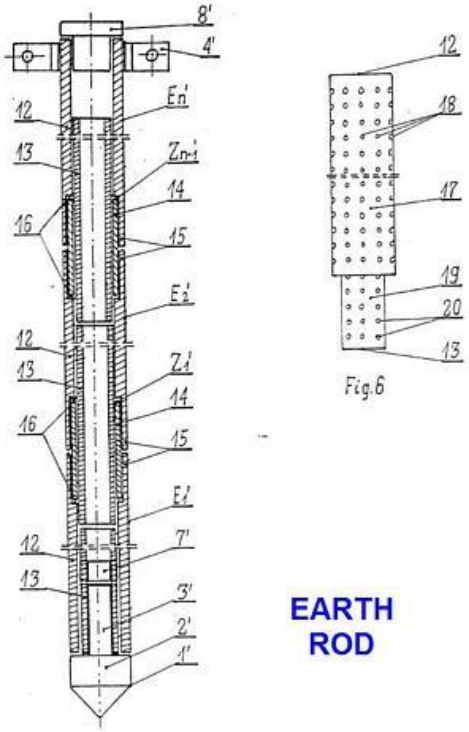

.

H01R 4/70

Insulation of connections (end caps H01R 4/22)

References

Limiting references

This place does not cover:

End caps	H01R 4/22

H01R 4/72

using a heat shrinking insulating sleeve (heat recovarable plastics B29C 61/00)

Definition statement

This place covers:

Illustrative example of subject matter classified in H01R 4/72

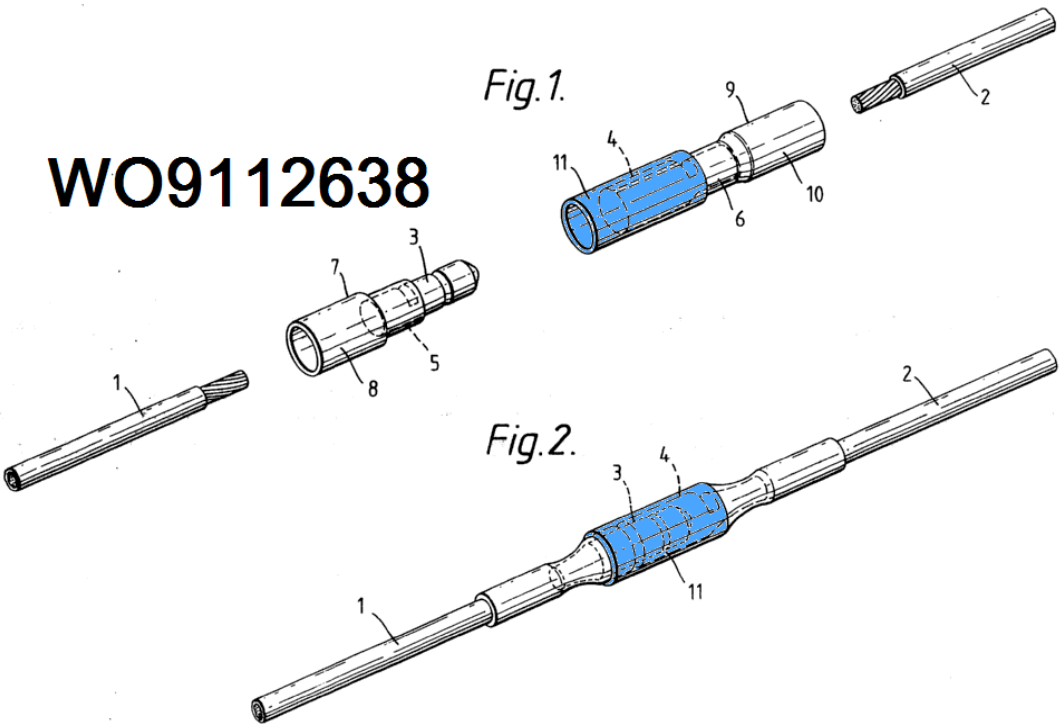

References

Informative references

Attention is drawn to the following places, which may be of interest for search:

Heat recovarable plastics	B29C 61/00

H01R 9/00

Connectors and connecting arrangements providing a plurality of mutually insulated connections; Terminals or binding posts mounted upon a base or in a case; Terminal strips; Terminal blocks (details of direct connections or connections using contact members penetrating insulation H01R 4/00; {individual connecting parts H01R 11/00;} specially adapted for printed circuits, flat or ribbon cables, or like generally planar structures H01R 12/00; coupling devices H01R 12/70, H01R 24/00-H01R 33/00; flexible or turnable line connectors H01R 35/00)

Definition statement

This place covers:

Structural associations of mutually-insulated electrical connecting elements

References

Limiting references

This place does not cover:

Details of direct connections or connections using contact members penetrating insulation	H01R 4/00;
Individual connecting parts	H01R 4/00;
Individual connecting parts	H01R 11/00
Specially adapted for printed circuits, flat or ribbon cables, or like generally planar structures	H01R 12/00
Coupling devices	H01R 12/70, H01R 24/00 - H01R 33/00
Flexible or turnable line connectors	H01R 35/00

H01R 9/031

{for multiphase cables, e.g. with contact members penetrating insulation of a plurality of conductors (insulation penetrating contact members in general H01R 4/24)}

Definition statement

This place covers:

Illustrative example of subject matter classified in H01R 9/031

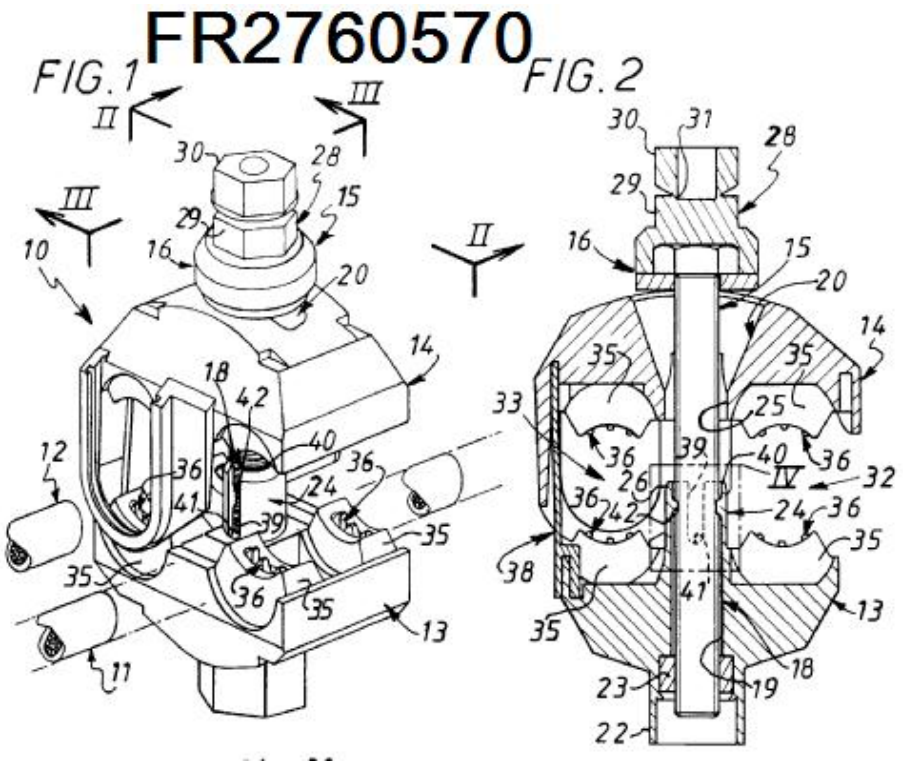

References

Limiting references

This place does not cover:

Insulation penetrating contact members in general	H01R 4/24

H01R 9/032

{for shielded multiconductor cable (coaxial cables with one conductor surrounded by shield H01R 9/05; flat shielded cables H01R 12/594)}

References

Limiting references

This place does not cover:

Coaxial cables with one conductor surrounded by shield	H01R 9/05;
Flat shielded cables	H01R 9/0778

H01R 9/035

{twisted pair surrounded by shield}

Definition statement

This place covers:

Illustrative example of subject matter classified in H01R 9/035

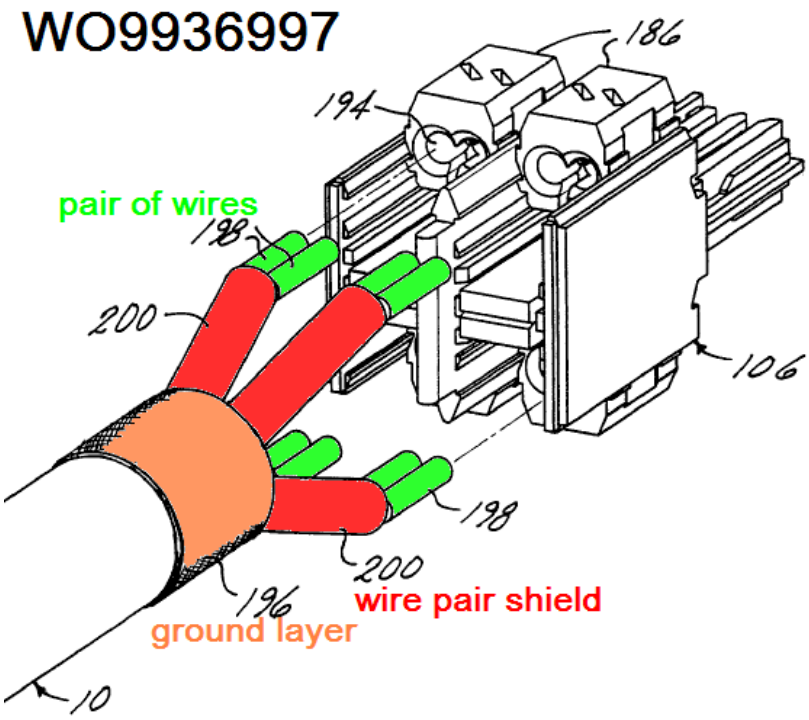

H01R 9/05

for coaxial cables

Definition statement

This place covers:

Structural associations of coaxial cables

H01R 9/0518

{Connection to outer conductor by crimping or by crimping ferrule (in general H01R 4/18)}

References

Limiting references

This place does not cover:

Connection to outer conductor in general	H01R 4/18

H01R 9/0521

{Connection to outer conductor by action of a nut (in general H01R 4/30)}

Definition statement

This place covers:

Illustrative example of subject matter classified in H01R 9/0521

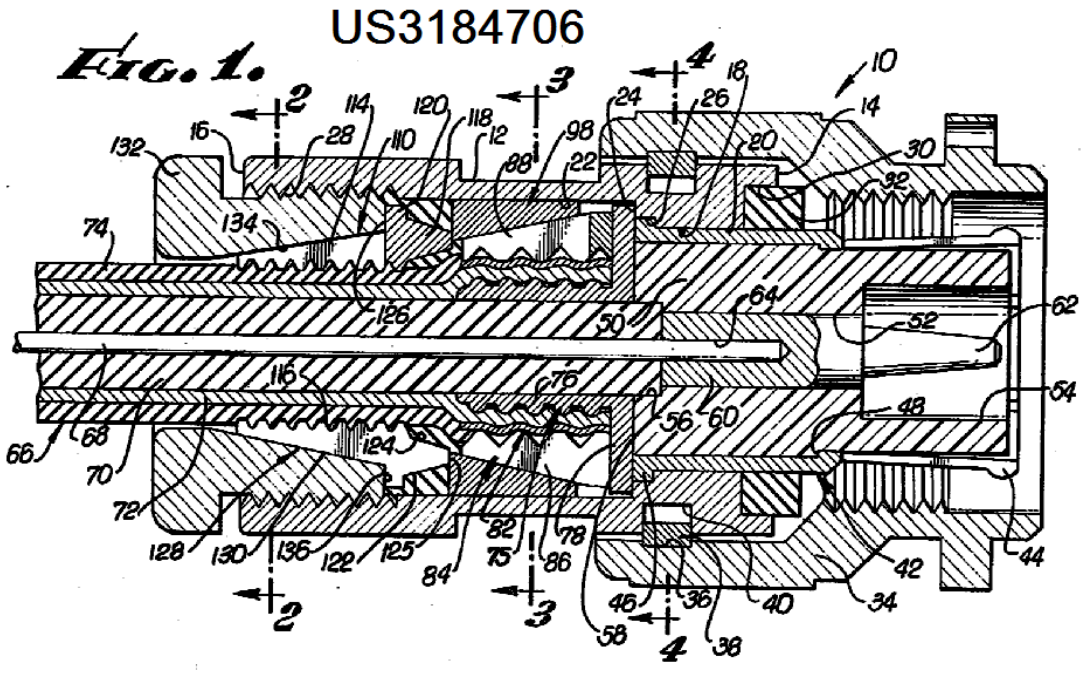

References

Limiting references

This place does not cover:

Connection to outer conductor in general	H01R 4/18

H01R 9/0524

{Connection to outer conductor by action of a clamping member, e.g. screw fastening means (H01R 9/0515 takes precedence; in general H01R 4/38)}

References

Limiting references

This place does not cover:

Connection to outer conductor in general	H01R 4/38
Connection to a rigid planar substrate	H01R 9/0515

H01R 9/0527

{Connection to outer conductor by action of a resilient member, e.g. spring (in general H01R 4/48)}

References

Limiting references

This place does not cover:

Connection to outer conductor in general	H01R 4/48

H01R 9/075

{with contacts penetrating cable insulation for making contact with conductors, e.g. needle points (in general H01R 4/24)}

References

Limiting references

This place does not cover:

In general	H01R 4/24

H01R 9/0757

{with contacts having at least a slotted plate for penetration of cable insulation, e.g. insulation displacement contacts for round conductor flat cables (in general H01R 4/2416)}

References

Limiting references

This place does not cover:

In general	H01R 4/2416

H01R 9/0771

{with permanent deformation of contacts, e.g. crimping contacts for rectangular conductor flat cables (in general H01R 4/2495)}

References

Limiting references

This place does not cover:

In general	H01R 4/2495

H01R 9/09

{Connectors for printed circuits (printed connections to or between printed circuits H05K); Terminals, terminal strips, terminal blocks or bases for printed circuits}

Definition statement

This place covers:

Fixed connection wherein at least one of the elements to be connected is a rigid printed circuit board (PCB) or like structure.

References

Limiting references

This place does not cover:

Printed connections to or between printed circuits	H05K

H01R 9/091

{terminals for or connections to a printed circuit board (H01R 9/0515 takes precedence)}

References

Limiting references

This place does not cover:

Connection to a rigid planar substrate	H01R 9/0515

H01R 9/098

{the printed circuits being on the same board (with plated through holes H05K 3/42)}

References

Limiting references

This place does not cover:

With plated through holes	H05K 3/42

H01R 9/16

Fastening of connecting parts to base or case; Insulating connecting parts from base or case (lead-through insulators H01B 17/26)

Definition statement

This place covers:

Illustrative example of subject matter classified in H01R 9/16

GB1221806

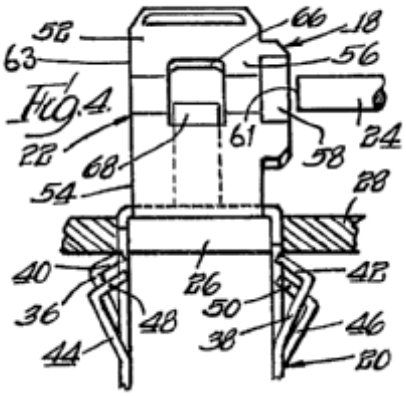

References

Limiting references

This place does not cover:

Lead-through insulators	H01B 17/26

H01R 9/22

Bases, e.g. strip, block, panel {(for printed circuits H01R 12/50)}

Definition statement

This place covers:

Terminal strips, blocks, bases

References

Limiting references

This place does not cover:

Bases for printed circuits	H01R 12/50

H01R 9/223

{Insulating enclosures for terminals (for switches H01H 9/0264)}

References

Limiting references

This place does not cover:

Insulating enclosures for switches	H01H 9/0264

H01R 9/226

{comprising a plurality of conductive flat strips providing connection between wires or components (H01R 9/2425 takes precedence)}

Definition statement

This place covers:

Illustrative example of subject matter classified in H01R 9/226

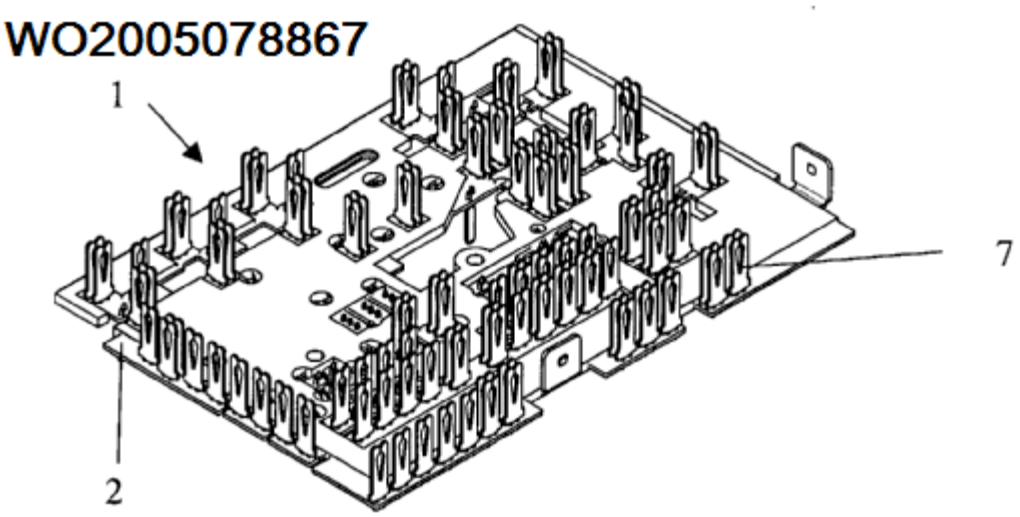

References

Limiting references

This place does not cover:

Bases comprising a plurality of conductive flat strips providing connection between wires or components	H01R 9/226

H01R 9/24

Terminal blocks

Definition statement

This place covers:

Illustrative example of subject matter classified in H01R 9/24

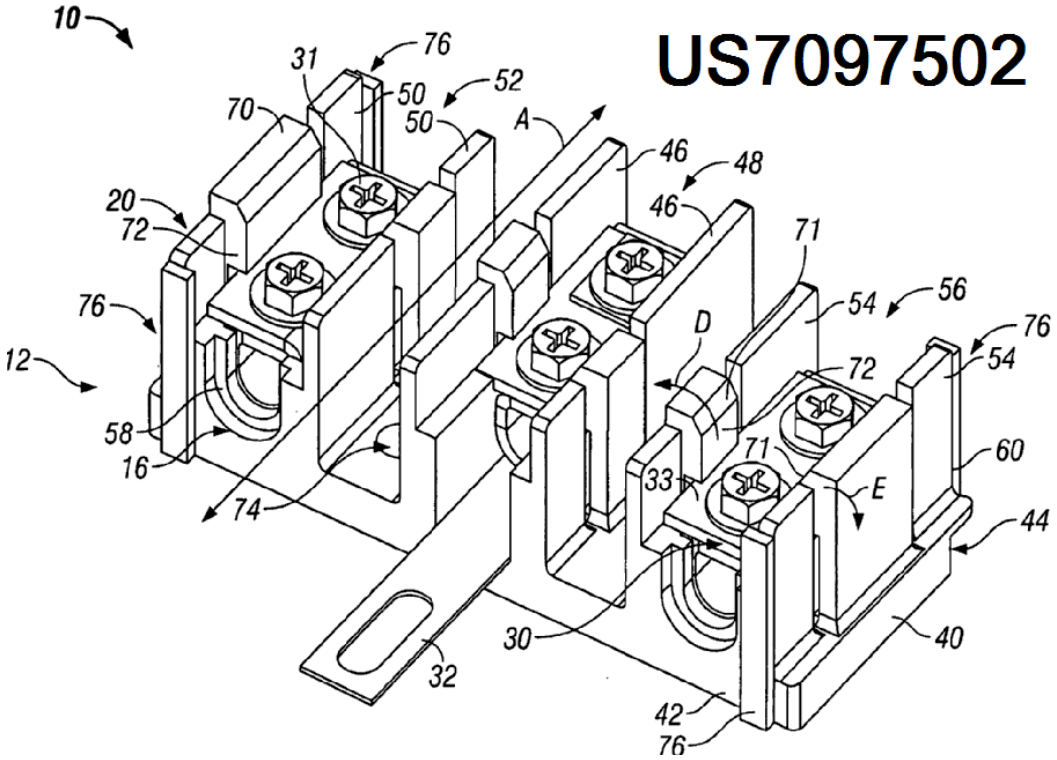

H01R 9/2408

{Modular blocks (H01R 9/26 takes precedence)}

References

Limiting references

This place does not cover:

Clip-on terminal blocks for side-by-side rail- or strip-mounting	H01R 9/26

H01R 9/2425

{Structural association with built-in components (for coupling parts H01R 13/66)}

References

Limiting references

This place does not cover:

Structural association with built-in components for coupling parts	H01R 13/66

H01R 9/2608

{Fastening means for mounting on support rail or strip (H01R 9/2691 takes precedence; for switch or other electrical device H02B 1/042)}

References

Limiting references

This place does not cover:

Clip-on terminal blocks for side-by-side rail- or strip-mounting with ground wire connection to the rail	H01R 9/2691
Fastening means for switch or other electrical device	H02B 1/042

H01R 9/2691

{with ground wire connection to the rail (in general H01R 4/64)}

Definition statement

This place covers:

Illustrative example of subject matter classified in H01R 9/2691

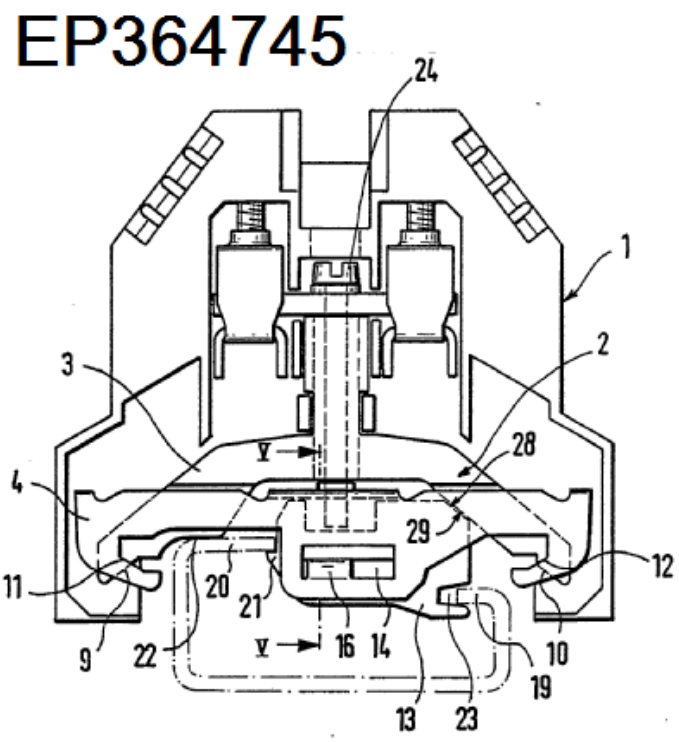

References

Limiting references

This place does not cover:

With ground wire connection to the rail in general	H01R 4/64

H01R 9/28

Terminal boards

Definition statement

This place covers:

Illustrative example of subject matter classified in H01R 9/28

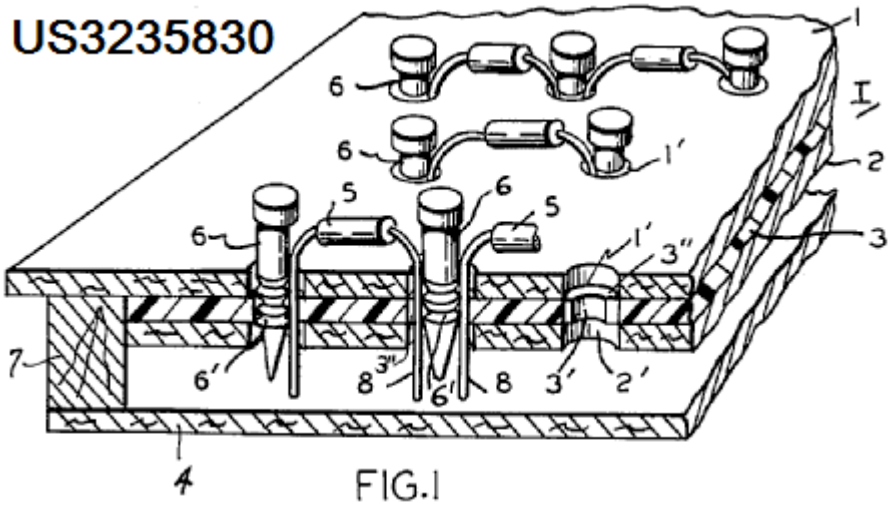

FIG.1

H01R 11/00

Connectors providing two or more spaced connecting locations for conductive members which are thereby interconnected; End pieces for wires or cables, supported by the wire or cable and for facilitating electrical connection to some other wire, terminal, or conductive member (connections between members in direct contact H01R 4/00; structural associations of a plurality of mutually-insulated electrical connecting elements H01R 9/00; coupling devices H01R 12/70, H01R 24/00-H01R 29/00, H01R 33/00; flexible or turnable line connectors H01R 35/00)

References

Limiting references

This place does not cover:

Connections between members in direct contact	H01R 4/00
Structural associations of a plurality of mutually-insulated electrical connecting elements	H01R 9/00
Coupling devices	H01R 12/70, H01R 24/00 - H01R 29/00, H01R 33/00
Flexible or turnable line connectors	H01R 35/00

H01R 11/03

characterised by the relationship between the connecting locations (H01R 11/11 takes precedence)

References

Limiting references

This place does not cover:

End pieces or tapping pieces for wires, supported by the wire and for facilitating electrical connection to some other wire, terminal or conductive member	H01R 11/11

H01R 11/05

the connecting locations having different types of direct connections

Definition statement

This place covers:

Illustrative example of subject matter classified in H01R 11/05

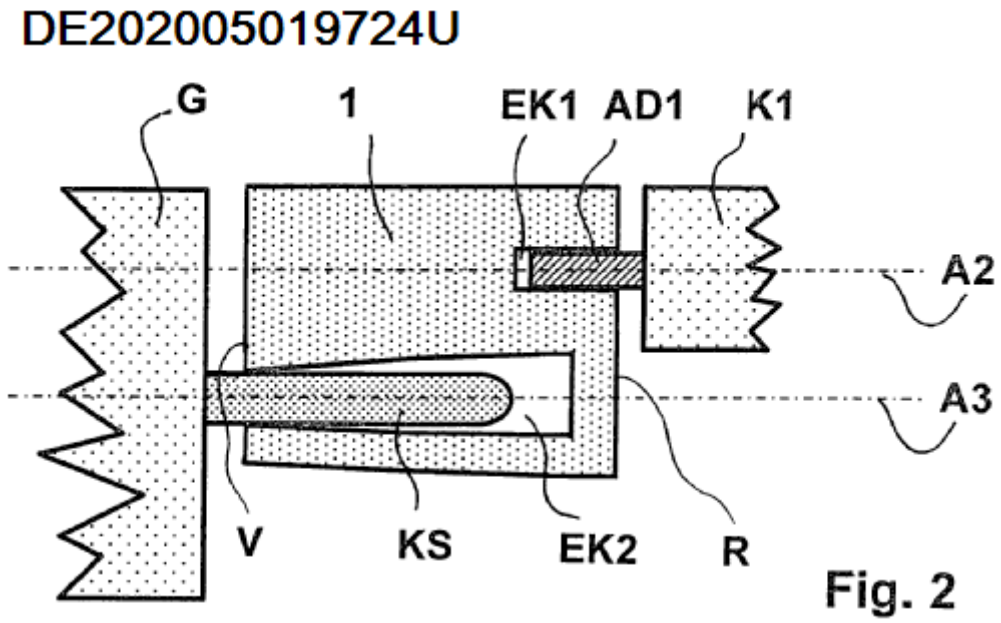

H01R 11/11

End pieces or tapping pieces for wires, supported by the wire and for facilitating electrical connection to some other wire, terminal or conductive member (H01R 11/01 takes precedence; for multiconductor cables H01R 9/11)

Definition statement

This place covers:

Illustrative example of subject matter classified in H01R 11/11

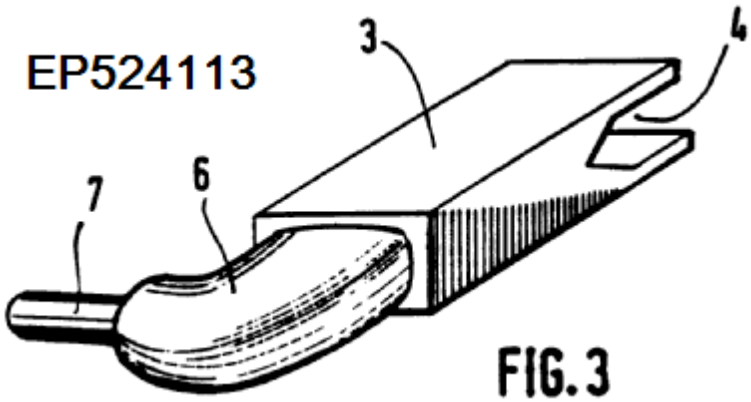

References

Limiting references

This place does not cover:

For multiconductor cables	H01R 9/11

H01R 11/12

End pieces terminating in an eye, hook, or fork

Definition statement

This place covers:

Illustrative example of subject matter classified in H01R 11/12

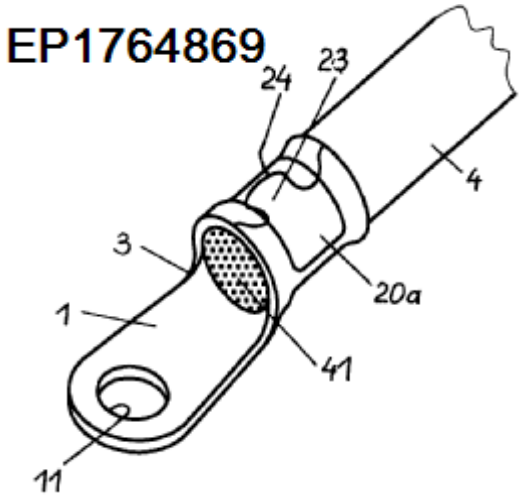

H01R 11/16

End pieces terminating in a soldering tip or socket

Definition statement

This place covers:

Illustrative example of subject matter classified in H01R 11/16

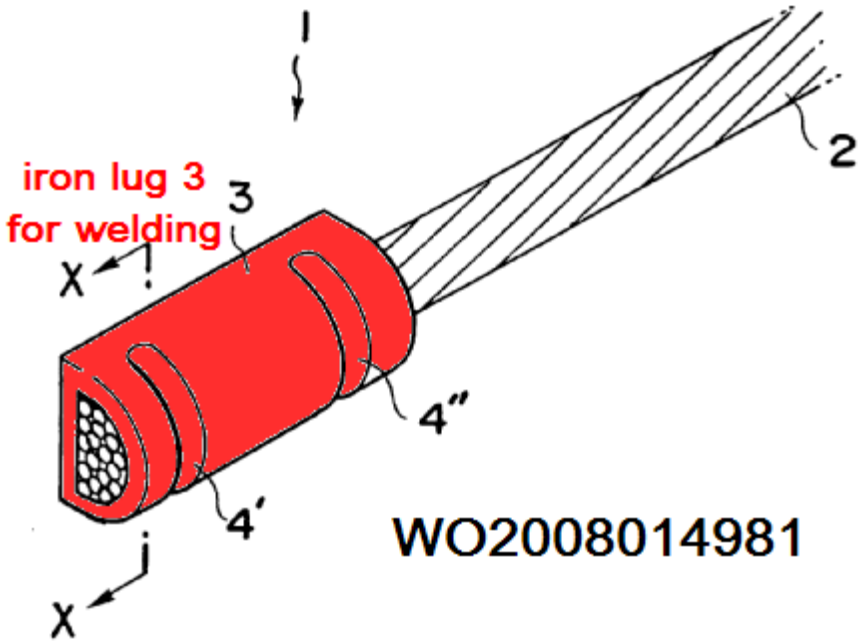

H01R 11/18

End pieces terminating in a probe

Definition statement

This place covers:

Illustrative example of subject matter classified in H01R 11/18

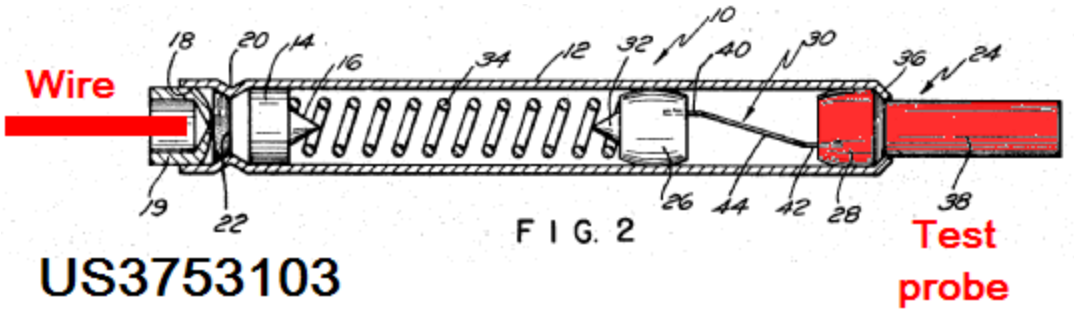

H01R 11/20

End pieces terminating in a needle point or analogous contact for penetrating insulation or cable strands

Definition statement

This place covers:

Illustrative example of subject matter classified in H01R 11/20

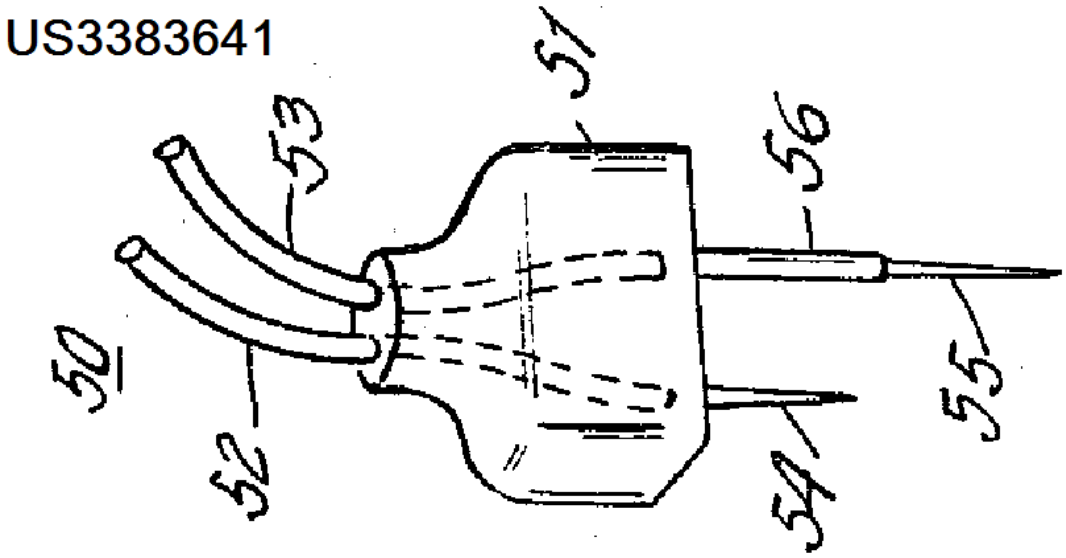

H01R 11/22

End pieces terminating in a spring clip

Definition statement

This place covers:

Illustrative example of subject matter classified in H01R 11/22

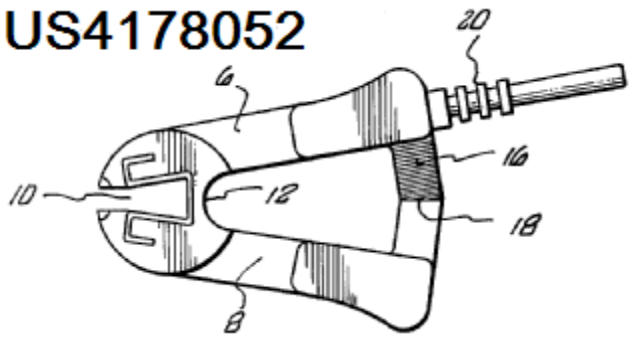

H01R 11/26

End pieces terminating in a screw clamp, screw or nut

Definition statement

This place covers:

Illustrative example of subject matter classified in H01R 11/26

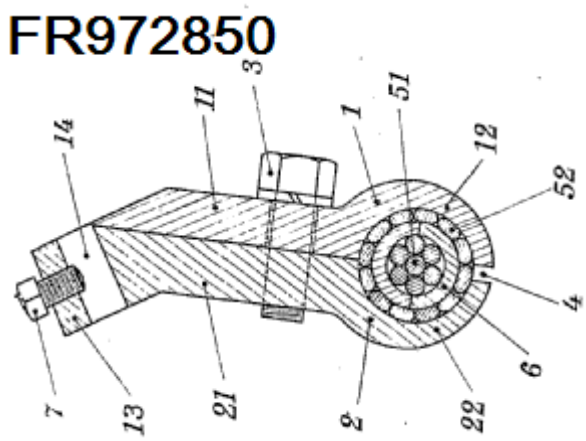

H01R 11/28

End pieces consisting of a ferrule or sleeve

Definition statement

This place covers:

Connectors for car batteries

H01R 11/287

{Intermediate parts between battery post and cable end piece}

Definition statement

This place covers:

Illustrative example of subject matter classified in H01R 11/287

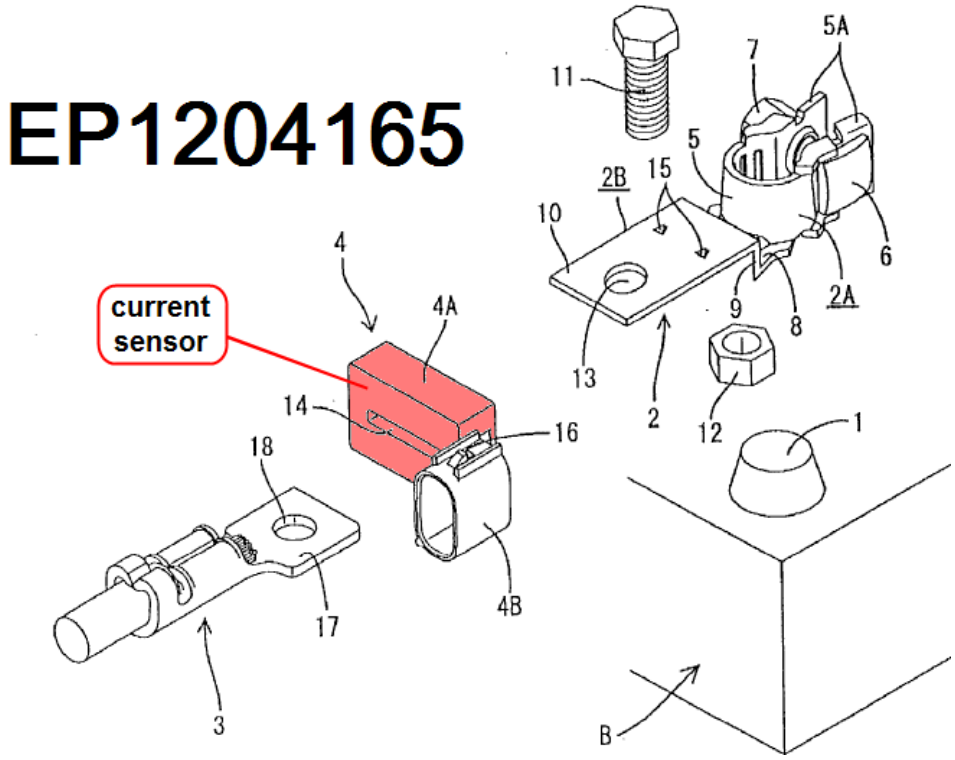

H01R 11/30

End pieces held in contact by a magnet

Definition statement

This place covers:

Illustrative example of subject matter classified in H01R 11/30

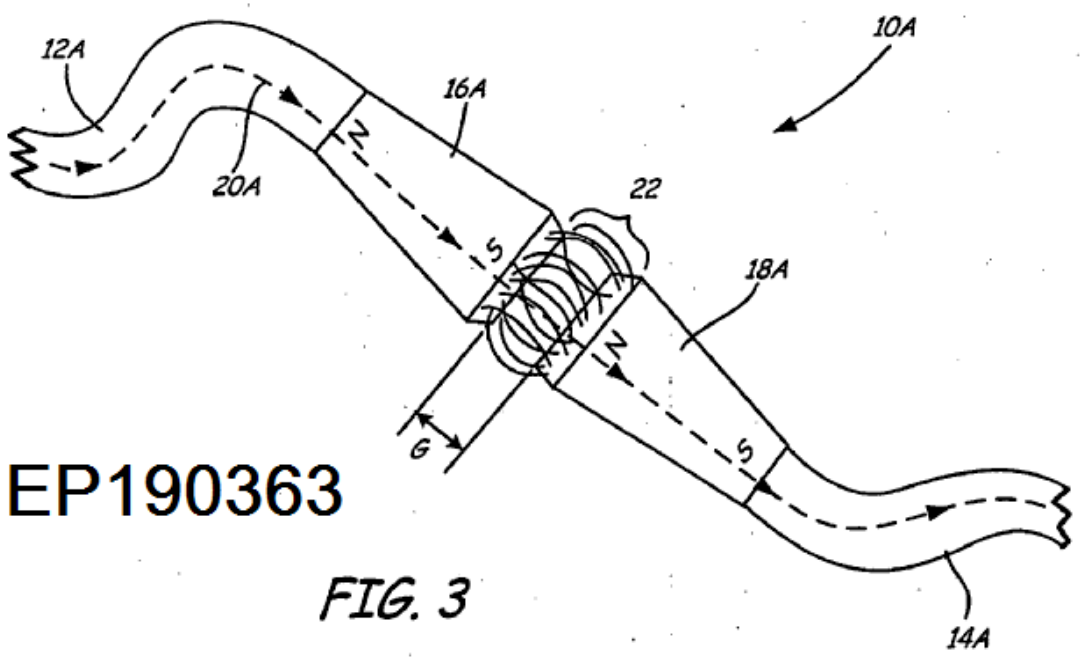

EP190363

FIG. 3

H01R 11/32

End pieces with two or more terminations

Definition statement

This place covers:

Illustrative example of subject matter classified in H01R 11/32

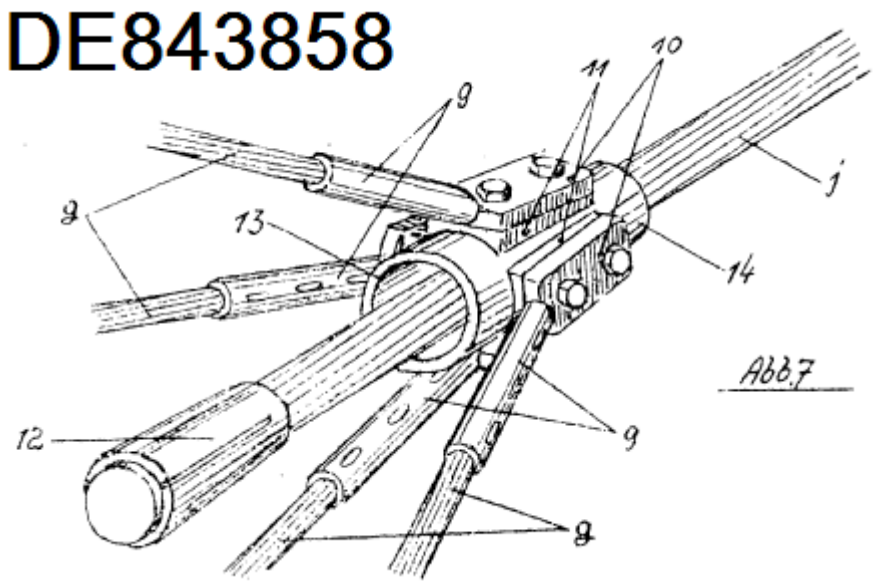

H01R 12/00

Structural associations of a plurality of mutually-insulated electrical connecting elements, specially adapted for printed circuits, e.g. printed circuit boards [PCBs], flat or ribbon cables, or like generally planar structures, e.g. terminal strips, terminal blocks; Coupling devices specially adapted for printed circuits, flat or ribbon cables, or like generally planar structures; Terminals specially adapted for contact with, or insertion into, printed circuits, flat or ribbon cables, or like generally planar structures (printed connections to, or between, printed circuits H05K 1/11)

References

Limiting references

This place does not cover:

Printed connections to, or between, printed circuits	H05K 1/11

H01R 12/50

Fixed connections

Definition statement

This place covers:

Fixed connections for PCB's, flat or ribbon cables or like structures

H01R 12/51

for rigid printed circuits or like structures

Definition statement

This place covers:

Fixed connection of which one party is a rigid printed circuit board.

Fixed connection for members (e.g. connectors) to rigid printed circuit board by other structures than terminals (e.g. housing) that are not covered by H01R 12/52- H01R 12/58.

Special rules of classification

Those characterized by the terminals are classified in H01R 12/55- H01R 12/58.

H01R 12/52

connecting to other rigid printed circuits or like structures

Definition statement

This place covers:

Fixed connection of which both of the connecting parties are rigid printed circuit board.

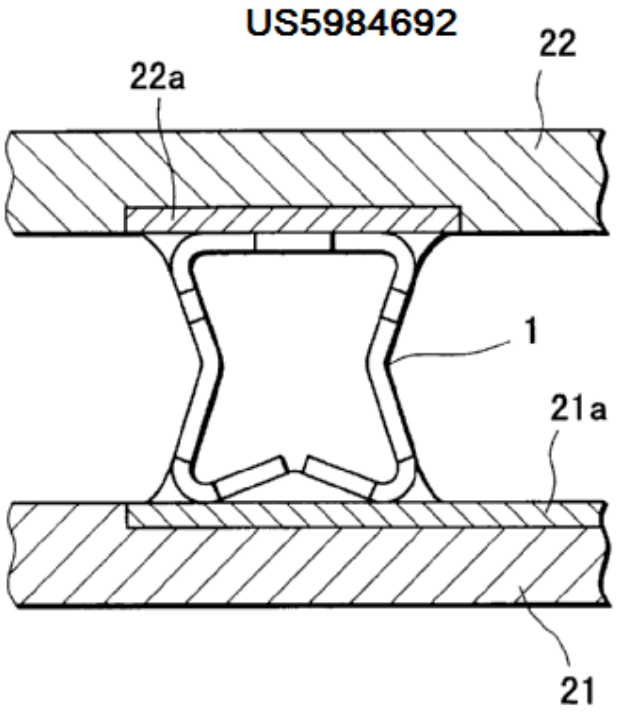

H01R 12/526

{the printed circuits being on the same board (with plated through holes H05K 3/42)}

References

Limiting references

This place does not cover:

Printed circuits being on the same board with plated through holes	H05K 3/42

H01R 12/53

connecting to cables except for flat or ribbon cables

Definition statement

This place covers:

Fixed connection for cables mounted on rigid printed circuit board, the cable having a circular or similar cross section.

References

Informative references

Attention is drawn to the following places, which may be of interest for search:

Connections with flat or a ribbon cables	H01R 12/62.

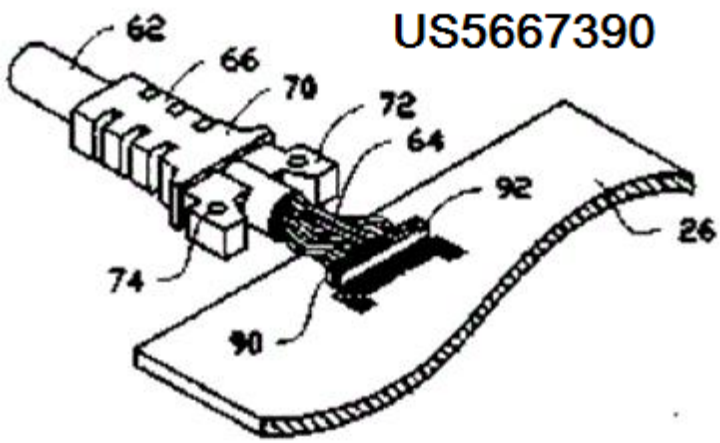

H01R 12/55

characterized by the terminals

Definition statement

This place covers:

Fixed connection for terminals to the rigid printed circuit board characterized by the shape or the mounting means of terminals, e.g. edge contact, including mounting of connectors to the printed circuit board.

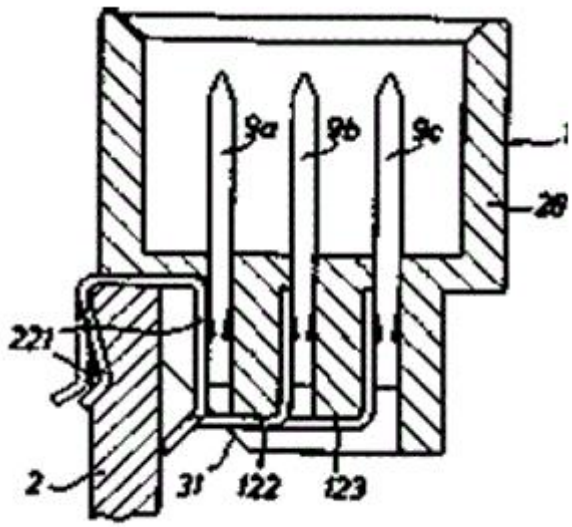

EP178540

H01R 12/57

surface mounting terminals

Definition statement

This place covers:

Fixed connection for terminals (including terminals of the connector) mounted directly on the rigid printed circuit board by using soldering, etc.

EP1473802

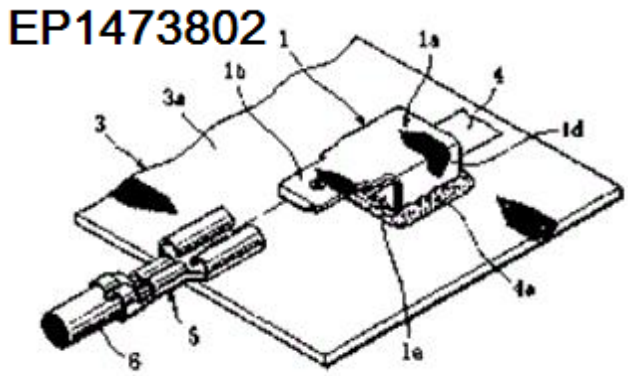

H01R 12/58

terminals for insertion into holes

Definition statement

This place covers:

Fixed connection for terminals (including terminals of the connector) inserted into holes that are provided on rigid printed circuit board.

WO94/24730

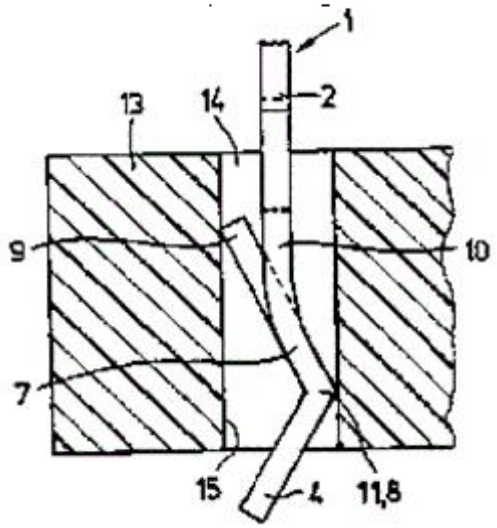

H01R 12/59

for flexible printed circuits, flat or ribbon cables or like structures

Definition statement

This place covers:

Fixed connection of which one party is flexible printed circuit board.

Fixed connection for members (e.g. connectors) to flexible printed circuit board by other structures than terminals (e.g. housing) that are not covered by H01R 12/61- H01R 12/69.

Special rules of classification

Those characterized by the connection of terminals are classified in H01R 12/65- H01R 12/69.

H01R 12/592

{connections to contact elements}

Definition statement

This place covers:

Illustrative example of subject matter classified in H01R 12/592

Patent Application Publication Jun. 2, 2011 Sheet 3 of 25 US 2011/0130030 A1

FIG. 3

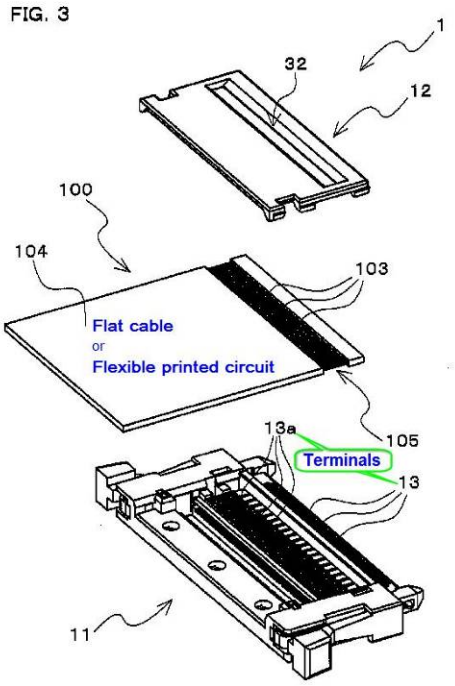

H01R 12/61

connecting to flexible printed circuits, flat or ribbon cables or like structures

Definition statement

This place covers:

Fixed connection directly connecting between flexible printed circuit boards.

US2002/0028598

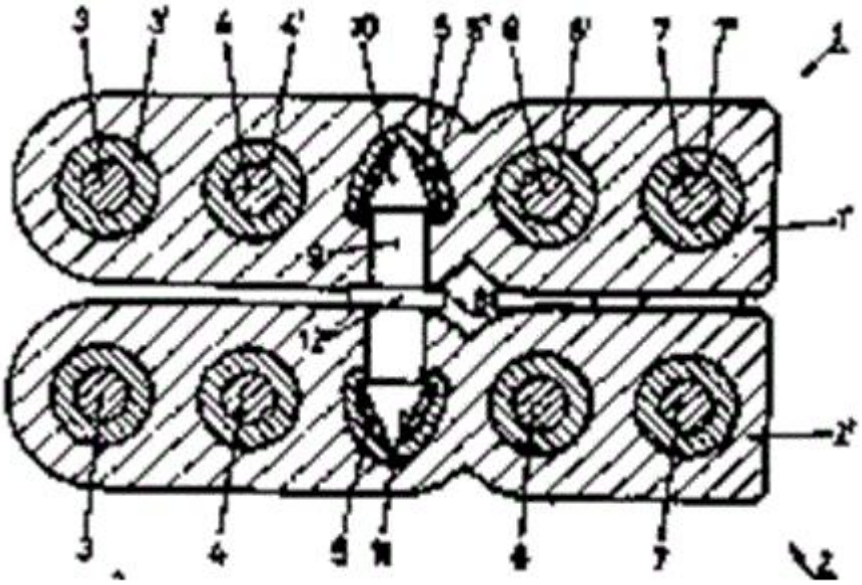

H01R 12/616

{having contacts penetrating insulation for making contact with conductors, e.g. needle points (in general H01R 4/24)}

Definition statement

This place covers:

Illustrative example of subject matter classified in H01R 12/616

WO2011101803

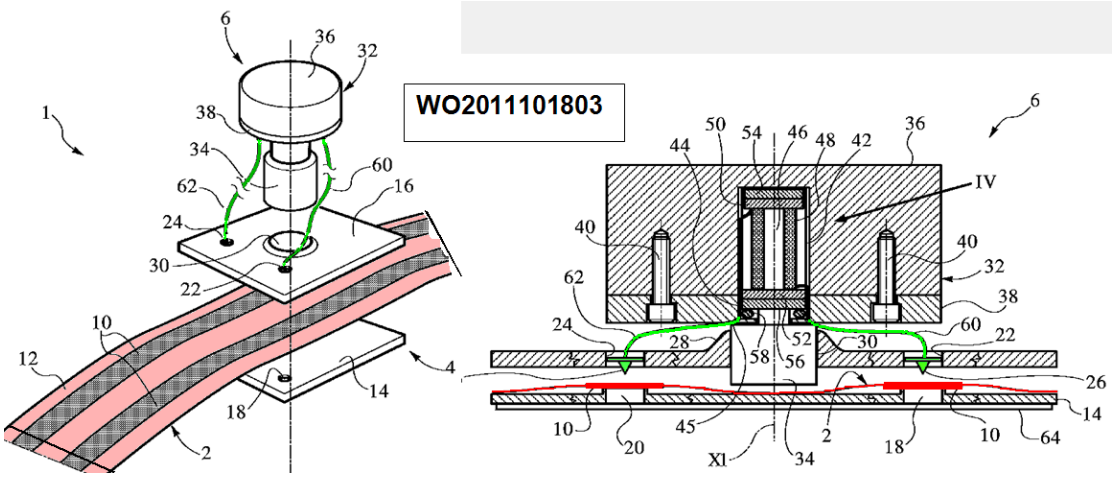

References

Limiting references

This place does not cover:

Contacts penetrating insulation for making contact with conductors in general	H01R 4/24

H01R 12/62

connecting to rigid printed circuits or like structures

Definition statement

This place covers:

Fixed connection directly connecting between flexible printed circuit board and rigid printed circuit board.

US2002/0004341

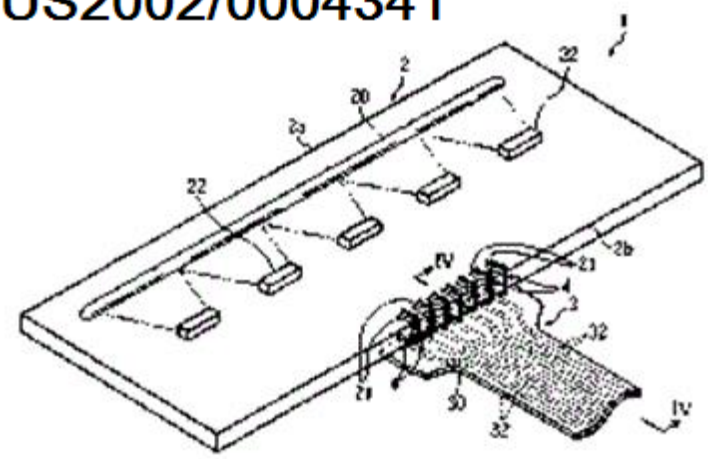

H01R 12/63

connecting to another shape cable

Definition statement

This place covers:

Fixed connection for cables directly mounted on flexible printed circuit board.

EP1035616

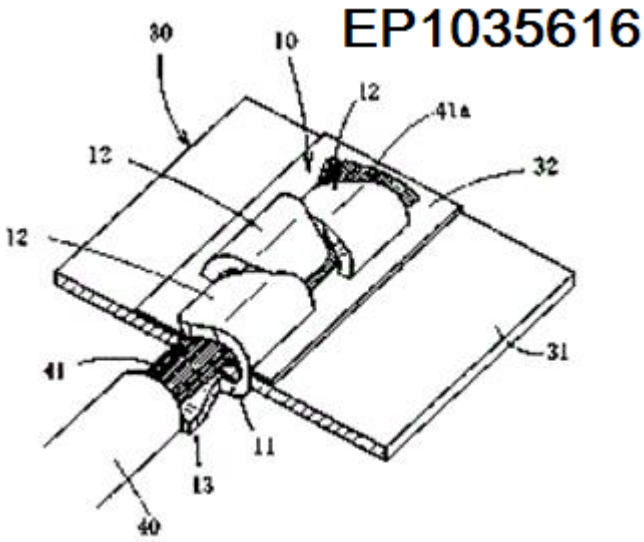

H01R 12/65

characterized by the terminal

Definition statement

This place covers:

Fixed connection characterized by the terminals directly mounted on flexible printed circuit board, e.g. edge contact.

US2001/0019918

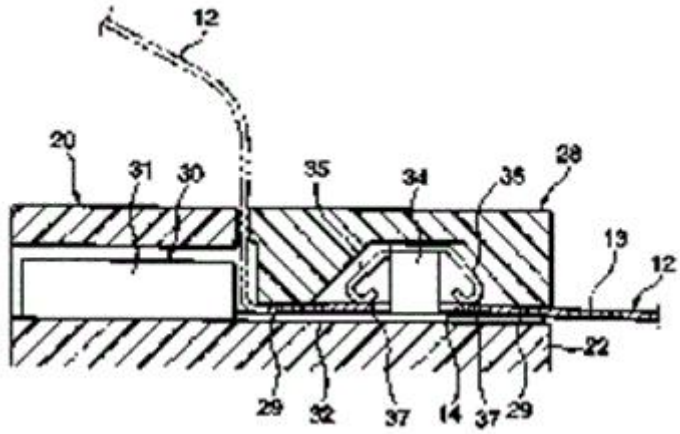

H01R 12/67

insulation penetrating terminals

Definition statement

This place covers:

Fixed connection by terminals penetrating the flexible printed circuit board e.g. insulation displacement terminal.

EP932221

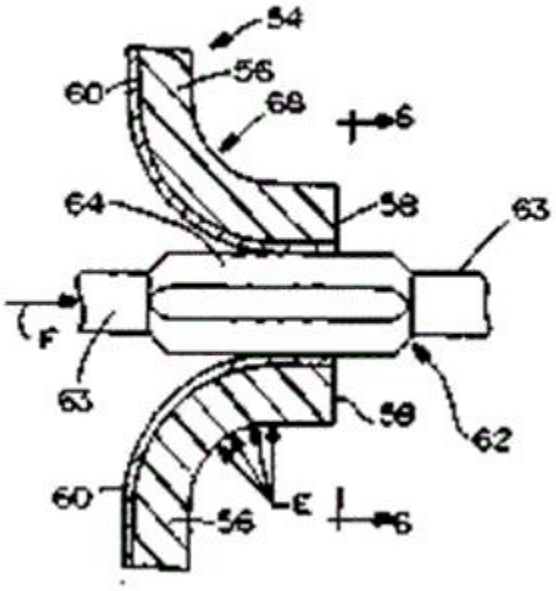

US6196863

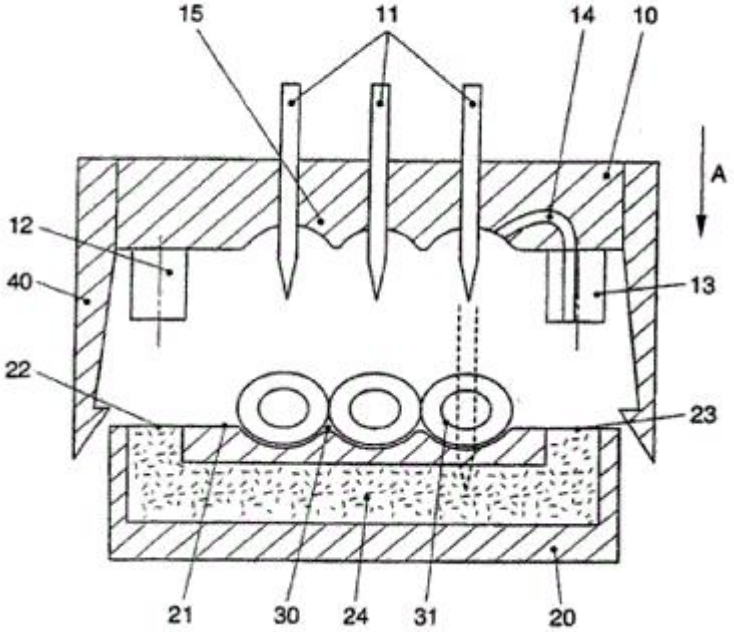

H01R 12/675

{with contacts having at least a slotted plate for penetration of cable insulation, e.g. insulation displacement contacts for round conductor flat cables (in general H01R 4/2416)}

References

Limiting references

This place does not cover:

With contacts having at least a slotted plate for penetration of cable insulation, in general	H01R 4/2416

H01R 12/69

deformable terminals, e.g. crimping terminals

Definition statement

This place covers:

Fixed connection by partially deformed terminals connected to conductors of flexible printed circuit board e.g. Crimping terminals Excluding those penetrating the flexible printed circuit board H01R 12/67,H01R 12/68.

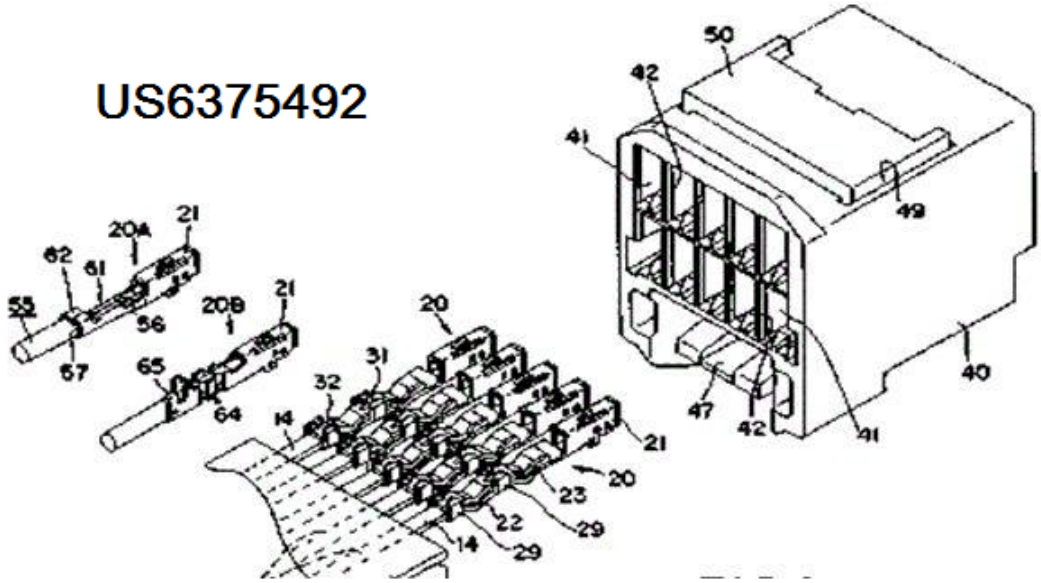

H01R 12/70

Coupling devices

Definition statement

This place covers:

Connection of printed circuit boards by connectors in a demountable manner.

Coupling devices for PCB's, flat or ribbon cables or like structures

Special rules of classification

When the identification of the subject of connection for the connector is not clear in the patent specification or drawings, classification is given in this subgroup too.

In the following classification, it should be noted that the subdivision is effected depending on the counterpart of the connection and on the subject of mounting of that connector which is one party having a character for classification.

H01R 12/7005

{Guiding, mounting, polarizing or locking means; Extractors (for printed circuit boards H05K)}

References

Limiting references

This place does not cover:

Guiding, mounting, polarizing or locking means; Extractors for printed circuit boards	H05K

H01R 12/7035

{involving non-elastic deformation, e.g. plastic deformation, melting (H01R 12/7064 takes precedence)}

References

Limiting references

This place does not cover:

Press fitting	H01R 12/7064

H01R 12/7076

{for connection between PCB and component, e.g. display (plugging components in general H05K 7/10)}

References

Limiting references

This place does not cover:

Plugging components in general	H05K 7/10

H01R 12/71

for rigid printing circuits or like structures

Definition statement

This place covers:

Coupling device of which the subject of connection for the connector is rigid printed circuit board and that are not covered by H01R 12/72- H01R 12/75.

H01R 12/712

{co-operating with the surface of the printed circuit or with a coupling device exclusively provided on the surface of the printed circuit (H01R 12/72 takes precedence)}

References

Limiting references

This place does not cover:

Coupling with the edge of the rigid printed circuits or like structures	H01R 12/72

H01R 12/716

{Coupling device provided on the PCB}

Definition statement

This place covers:

Illustrative example of subject matter classified in H01R 12/716

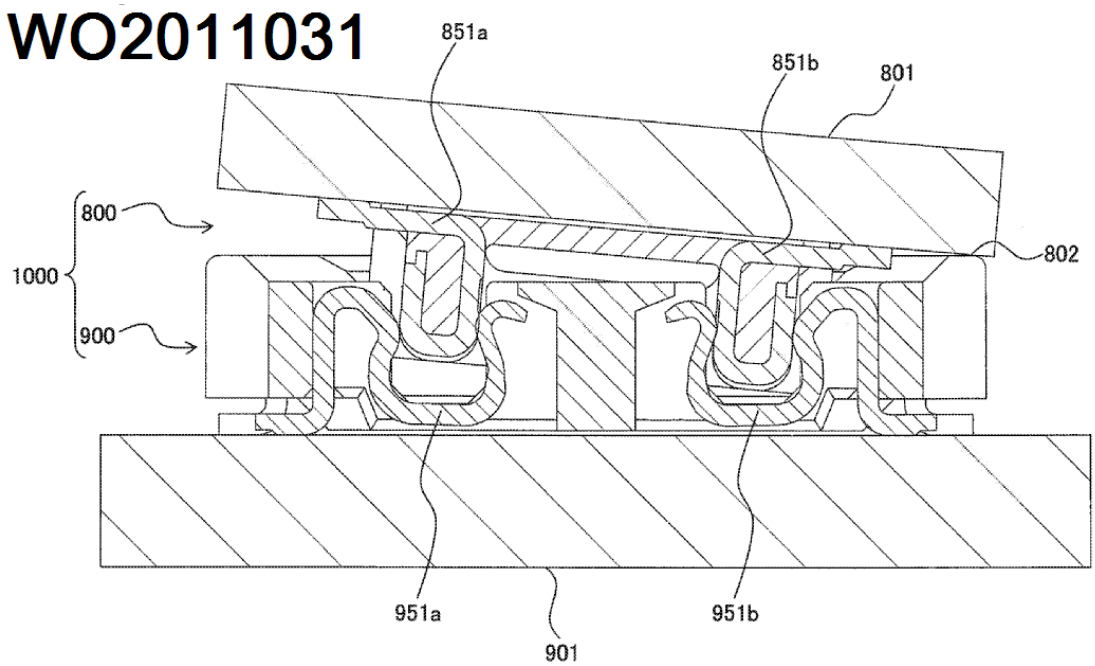

H01R 12/718

{Contact members provided on the PCB without an insulating housing (contacts for abutting H01R 12/714)}

References

Limiting references

This place does not cover:

Contacts for abutting	H01R 12/714

H01R 12/72

coupling with the edge of the rigid printed circuits or like structures

Definition statement

This place covers:

Coupling device of which the subject of connection for the connector is provided at the edge of, or nearby place to the edge of, rigid printed circuit board, and the subject of mounting is either not rigid printed circuit board or unidentifiable.

EP1128489

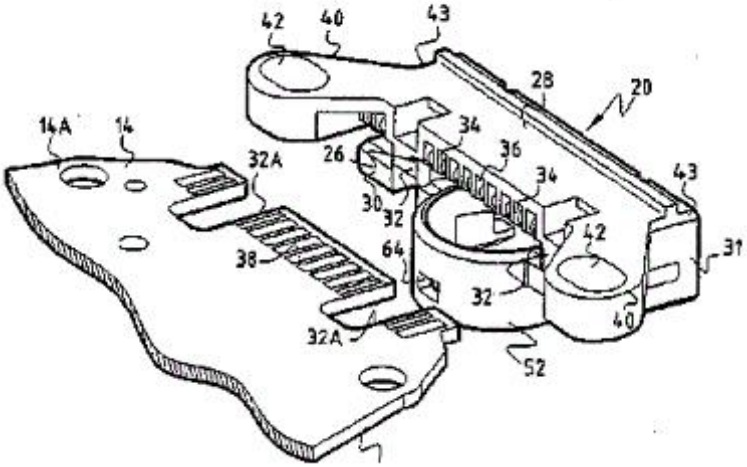

H01R 12/73

connecting to other rigid printed circuits or like structures

Definition statement

This place covers:

Coupling device of which the subject of connection for the connector is rigid printed circuit board, and the subject of mounting of the connector is also rigid printed circuit board.

WO96/11513A

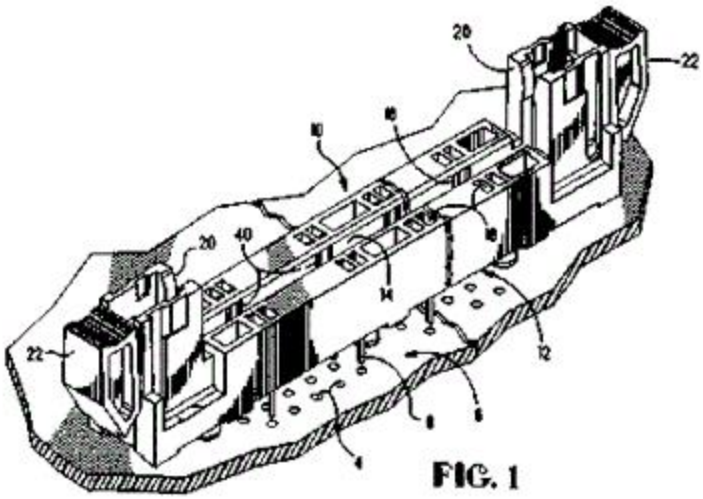

H01R 12/732

{Printed circuits being in the same plane}

Definition statement

This place covers:

Illustrative example of subject matter classified in H01R 12/732

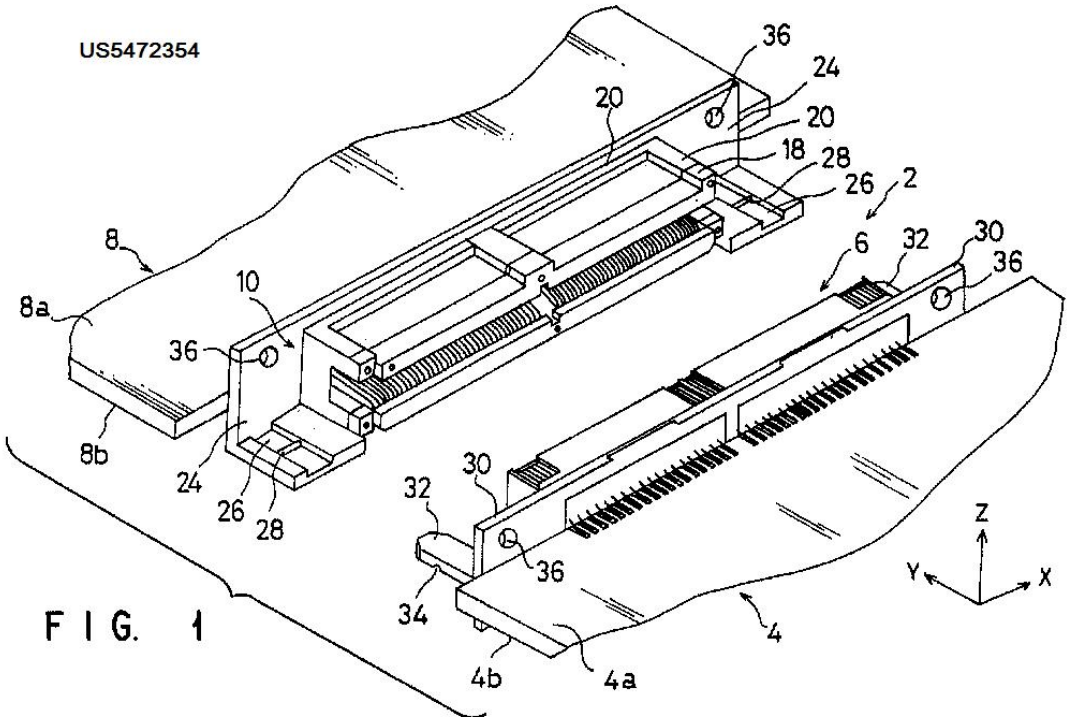

H01R 12/737

{Printed circuits being substantially perpendicular to each other (for printed connections H05K 3/366 takes precedence)}

References

Limiting references

This place does not cover:

For printed connections	H05K 3/366

H01R 12/75

connecting to cables except for flat or ribbon cables

Definition statement

This place covers:

Coupling device of which the subject of connection for the connector is cables, and the subject of mounting is rigid printed circuit board.

US5667401

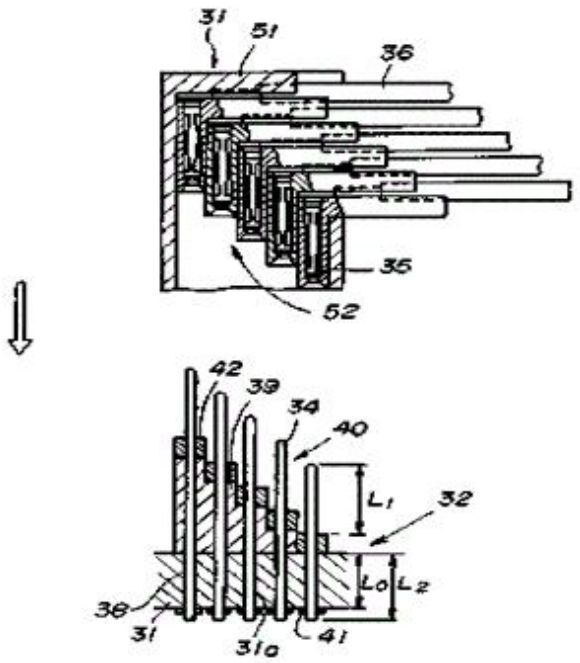

H01R 12/77

for flexible printed circuits, flat or ribbon cables or like structures

Definition statement

This place covers:

Coupling device of which the subject of connection for the connector is flexible printed circuit board, and that are not covered by H01R 12/78- H01R 12/81.

H01R 12/774

{Retainers}

Definition statement

This place covers:

Illustrative example of subject matter classified in H01R 12/774

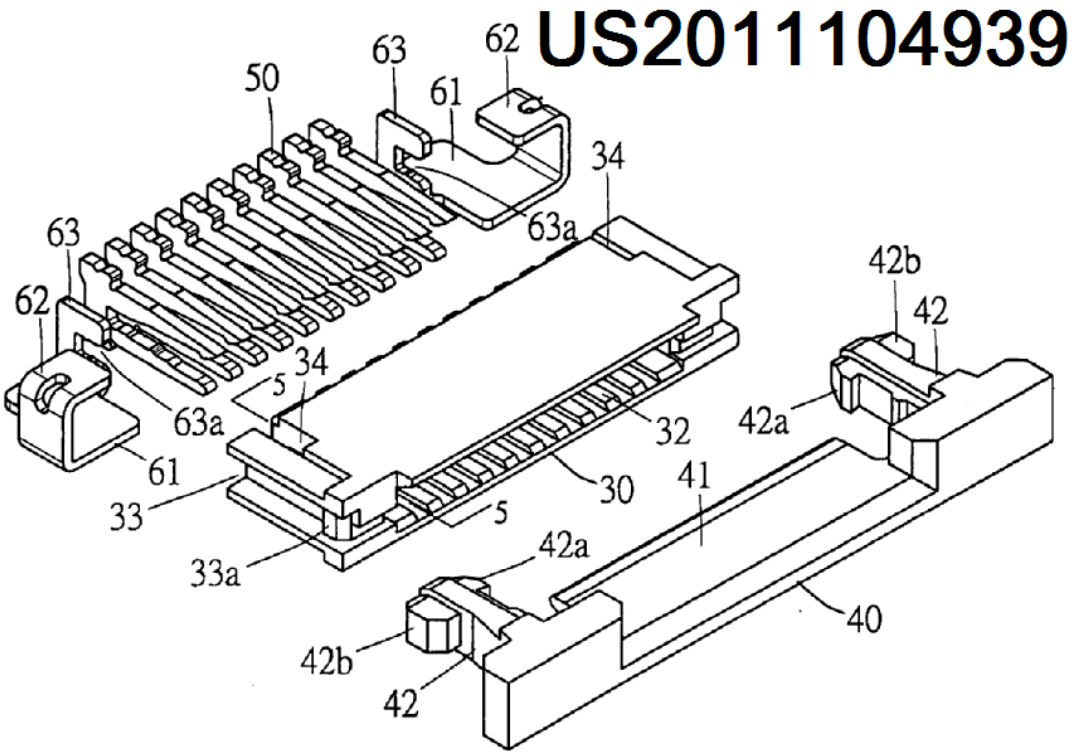

H01R 12/775

{Ground or shield arrangements (in general H01R 13/658)}

Definition statement

This place covers:

Illustrative example of subject matter classified in H01R 12/774

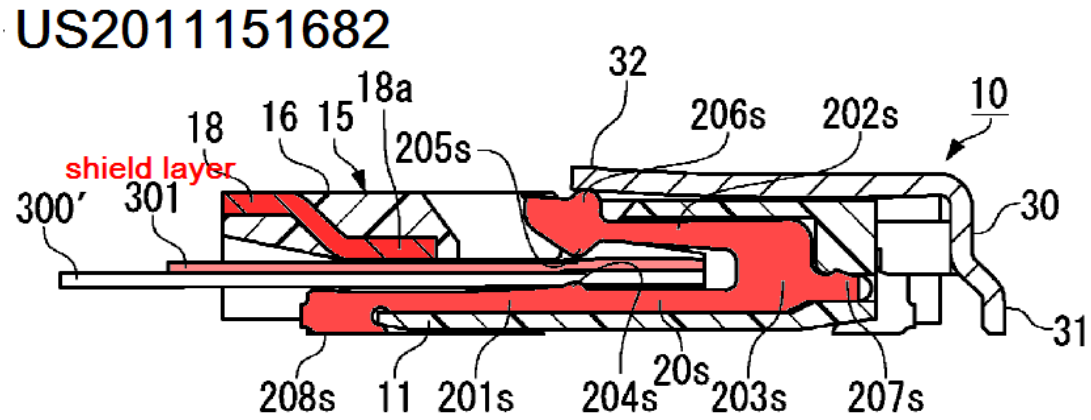

References

Limiting references

This place does not cover:

Ground or shield arrangements in general	H01R 13/658

H01R 12/777

{Coupling parts carrying pins, blades or analogous contacts (H01R 12/78, H01R 12/79 take precedence)}

References

Limiting references

This place does not cover:

Connecting to other flexible printed circuits, flat or ribbon cables or like structures	H01R 12/78
Connecting to rigid printed circuits or like structures	H01R 12/79

H01R 12/778

{Coupling parts carrying sockets, clips or analogous counter-contacts (H01R 12/78, H01R 12/79 take precedence)}

References

Limiting references

This place does not cover:

Connecting to other flexible printed circuits, flat or ribbon cables or like structures	H01R 12/78
Connecting to rigid printed circuits or like structures	H01R 12/79

H01R 12/78

connecting to other flexible printed circuits, flat or ribbon cables or like structures

Definition statement

This place covers:

Coupling device of which the subject of connection for the connector is flexible printed circuit board, and the subject of mounting is also flexible printed circuit board.

US5498169

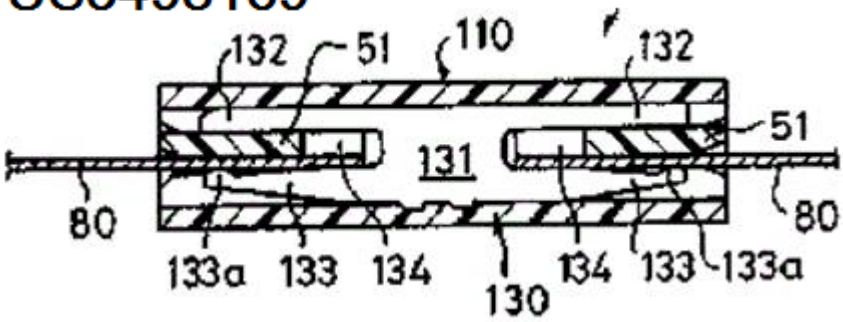

H01R 12/79

connecting to rigid printed circuits or like structures

Definition statement

This place covers:

Coupling device of which the subject of connection for the connector is flexible printed circuit board, and the subject of mounting is rigid printed circuit board.

US2004/0002255

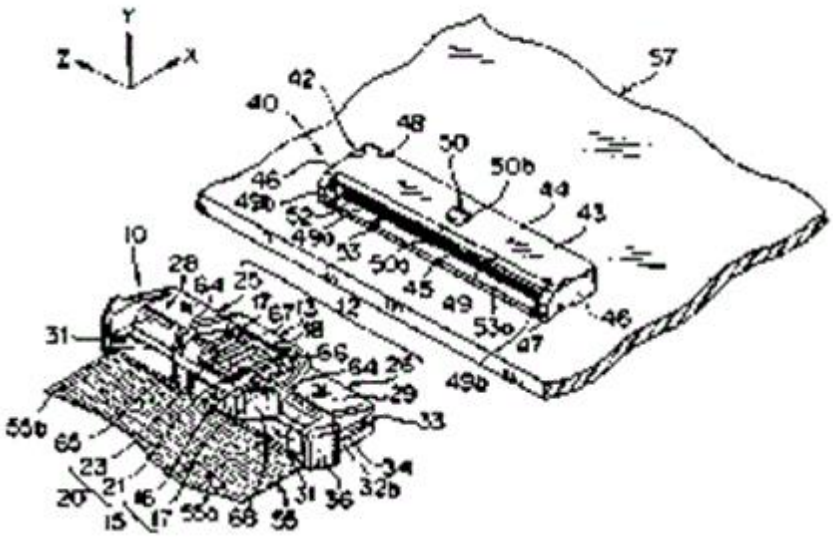

H01R 12/81

connecting to another cable except for flat or ribbon cable

Definition statement

This place covers:

Coupling device of which the subject of connection for the connector is cables, and the subject of mounting is flexible printed circuit board.

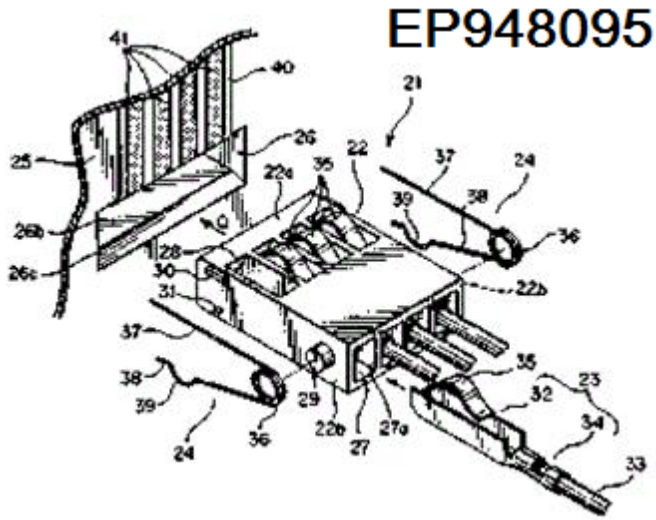

H01R 12/82

connected with low or zero insertion force

Definition statement

This place covers:

A connector performing the connection by zero insertion force or low insertion force

Coupling device which has the order of insertion for instance or cannot be classified in H01R 12/83-H01R 12/89.

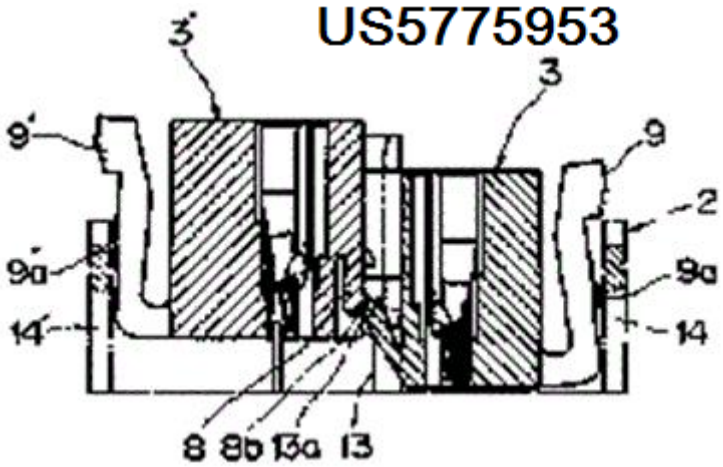

H01R 12/83

connected with pivoting of printed circuits or like after insertion

Definition statement

This place covers:

Coupling device that is activated by pivoting motion after insertion of the subject of connection.

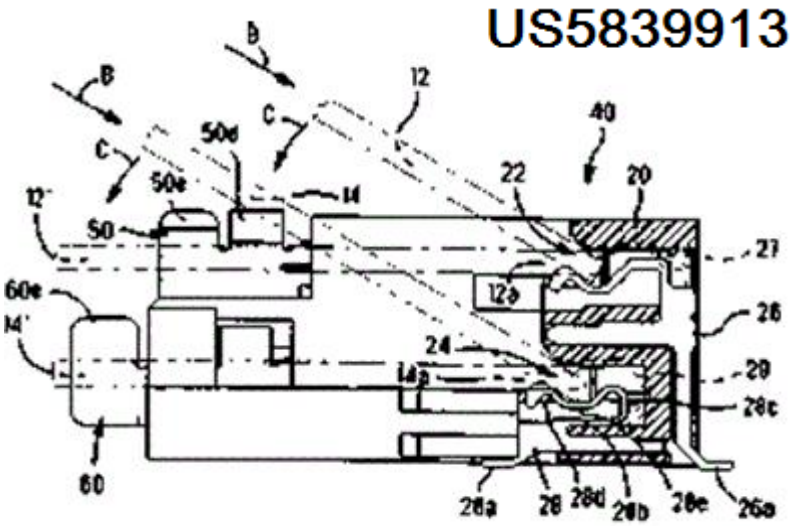

H01R 12/85

contact pressure producing means, contacts activated after insertion of printed circuits or like structures

Definition statement

This place covers:

Coupling device that is activated by applying certain force on the contact by certain means, its using actuator or screw, etc. that is not classified in H01R 12/87- H01R 12/89.

US6210184

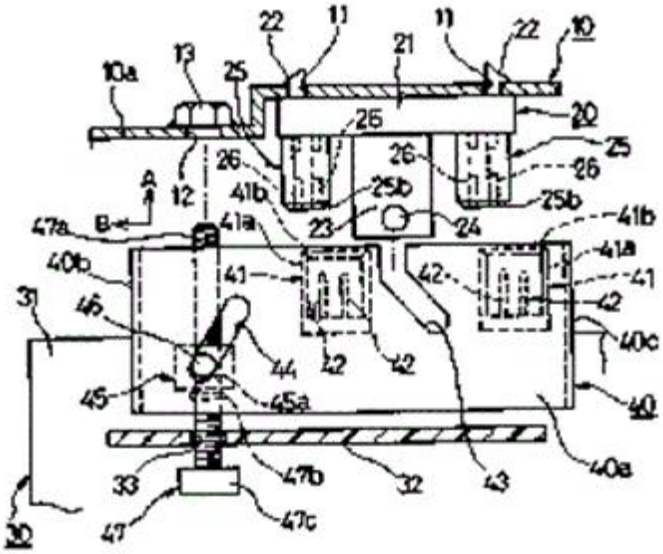

H01R 12/87

acting automatically by insertion of rigid printed or like structures

Definition statement

This place covers:

Coupling device that can perform the connection of zero insertion force or low insertion force with only insertion of the subject of connection and without any other operation.

US5584708

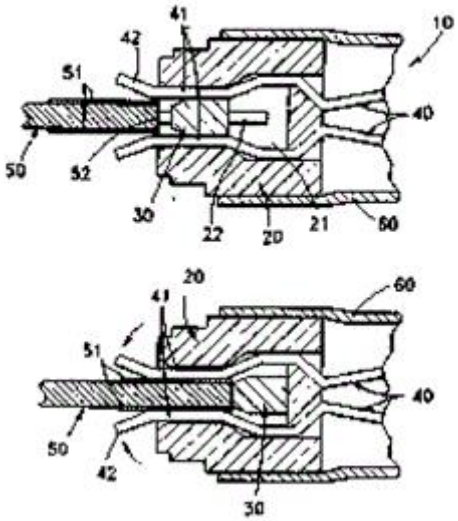

H01R 12/88

acting manually by rotating or pivoting connector housing parts

Definition statement

This place covers:

Coupling device that can perform the connection of zero insertion force or low insertion force connection by activating pivoting member installed within the housing. If it is automatically functioning by the insertion of the subject of connection, it is classified in H01R 12/87.

US5904586

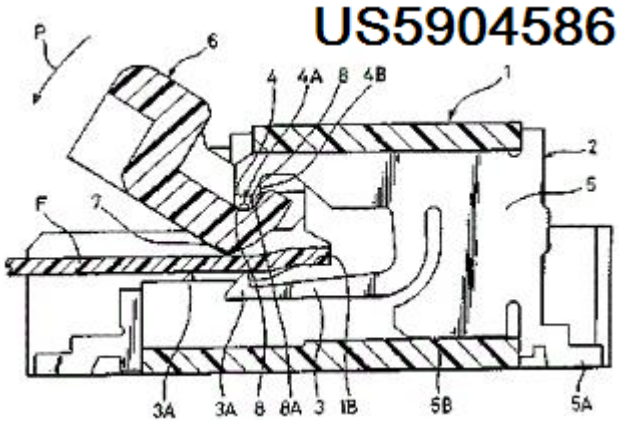

H01R 12/89

acting manually by moving connector housing parts linearly, e.g. slider

Definition statement

This place covers:

Coupling device that can perform the connection of zero insertion force or low insertion force connection by activating linear motion member installed within the housing. If it is automatically functioning by the insertion of the subject of connection, it is classified in H01R 12/87.

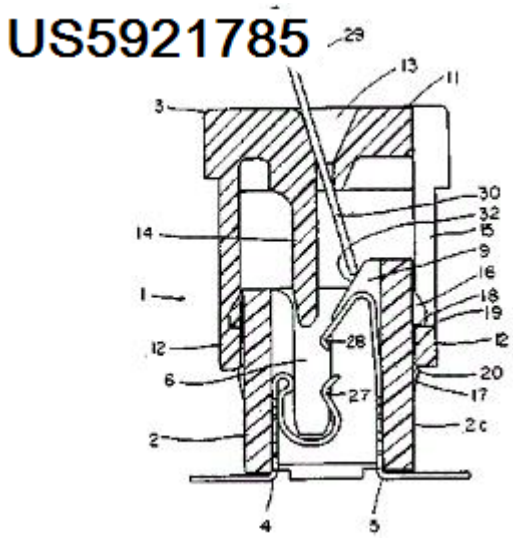

H01R 12/91

allowing relative movement between coupling parts, e.g. floating or self aligning (for coupling devices not specially adapted for printed circuits, flat or ribbon cables, or like generally planar structures, H01R 13/6315 takes precedence)

Definition statement

This place covers:

Coupling device of which connection is performed through automatic adjustment of the position between connectors to be connected.

US5306169A

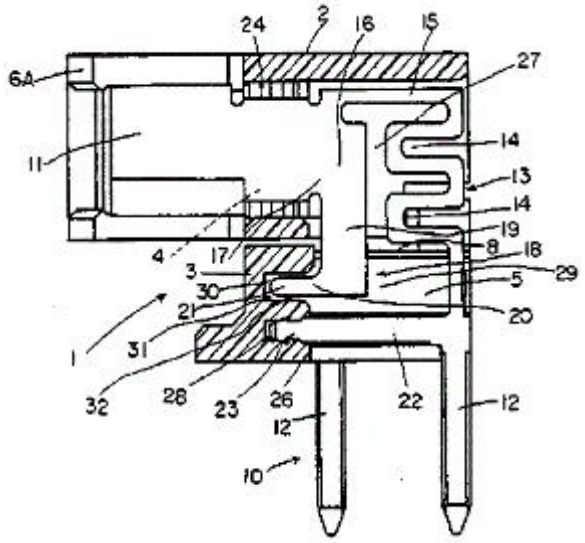

US2009/0239422A1

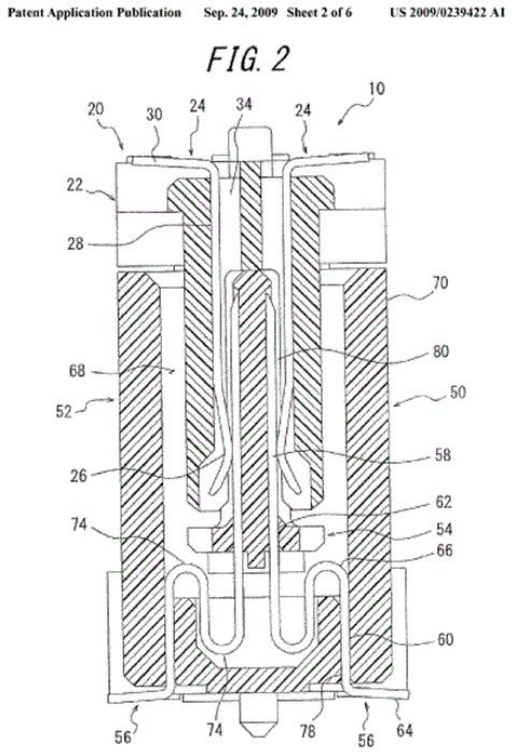

References

Limiting references

This place does not cover:

For coupling devices not specially adapted for printed circuits, flat or ribbon cables, or like generally planar structures,	H01R 13/6315

H01R 13/00

Details of coupling devices of the kinds covered by groups H01R 12/70 or H01R 24/00-H01R 33/00 {(electro-optical connectors G02B 6/24)}

Definition statement

This place covers:

Details of contacts for coupling devices

References

Informative references

Attention is drawn to the following places, which may be of interest for search:

Electro-optical connectors	G02B 6/24

H01R 13/02

Contact members

Definition statement

This place covers:

Contact members, pins, blades, sockets

H01R 13/05

Resilient pins or blades (carrying separate resilient parts H01R 13/15)

References

Limiting references

This place does not cover:

Carrying separate resilient parts	H01R 13/15

H01R 13/11

Resilient sockets (carrying separate resilient parts H01R 13/15)

References

Limiting references

This place does not cover:

Carrying separate resilient parts	H01R 13/15

H01R 13/15

Pins, blades or sockets having separate spring member for producing or increasing contact pressure

Definition statement

This place covers:

Illustrative example of subject matter classified in H01R 13/15

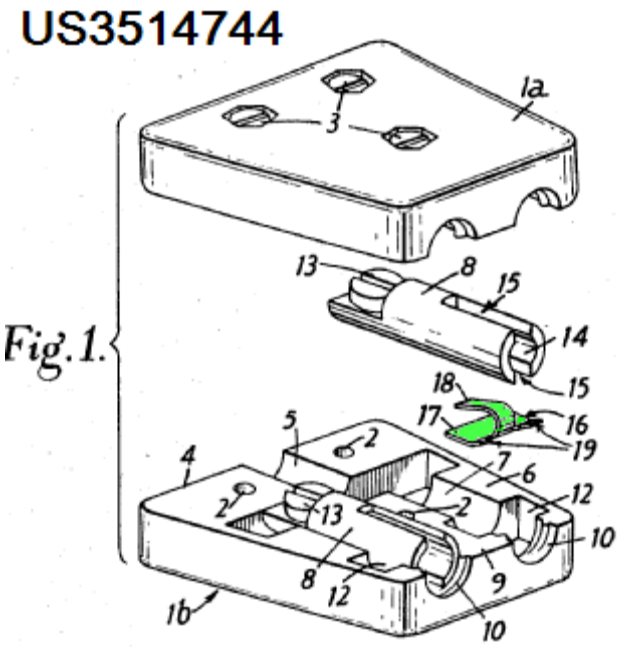

H01R 13/17

with spring member on the pin

Definition statement

This place covers:

Illustrative example of subject matter classified in H01R 13/17

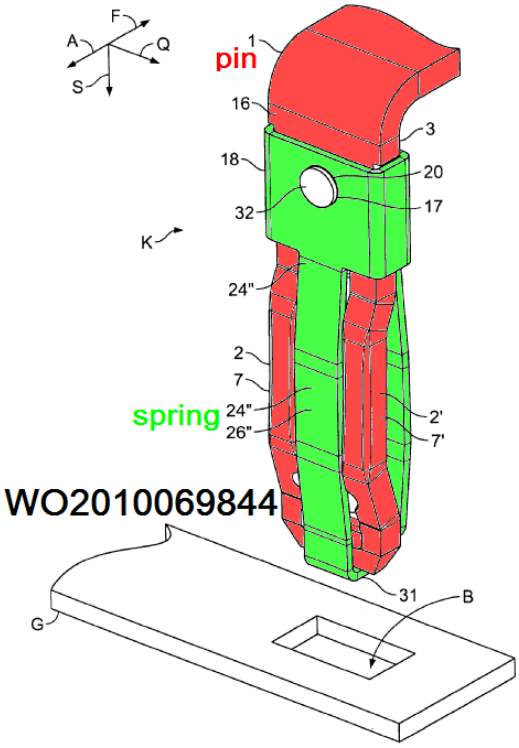

H01R 13/18

with the spring member surrounding the socket

Definition statement

This place covers:

Illustrative example of subject matter classified in H01R 13/18

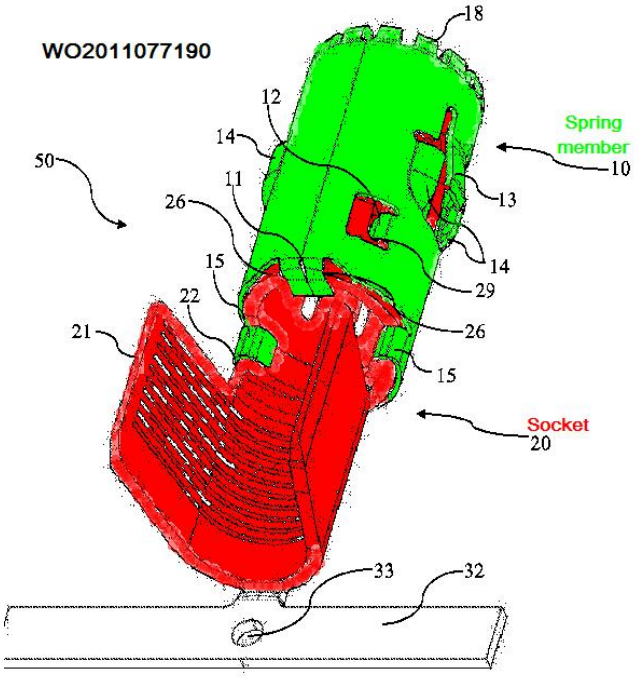

Fig. 3

H01R 13/187

with spring member in the socket

Definition statement

This place covers:

Illustrative example of subject matter classified in H01R 13/187

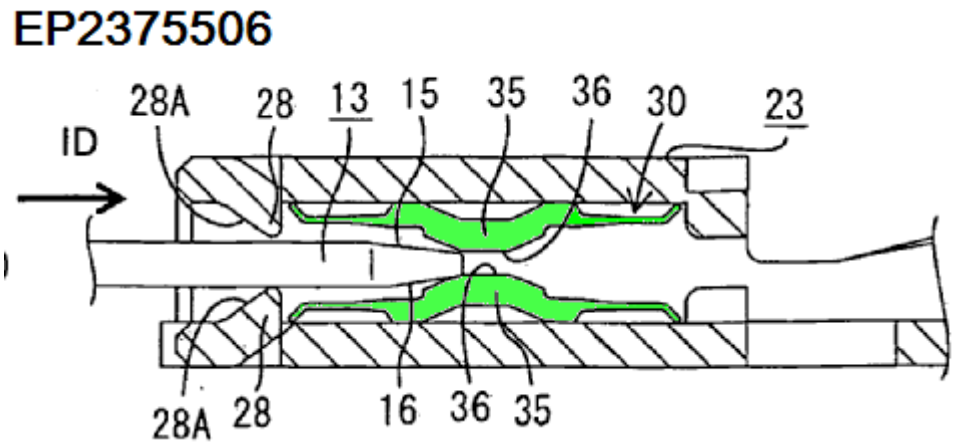

H01R 13/193

Means for increasing contact pressure at the end of engagement of coupling part, {e.g. zero insertion force or no friction (combined with printed circuit boards H01R 23/6813)}

Definition statement

This place covers:

Illustrative example of subject matter classified in H01R 13/193

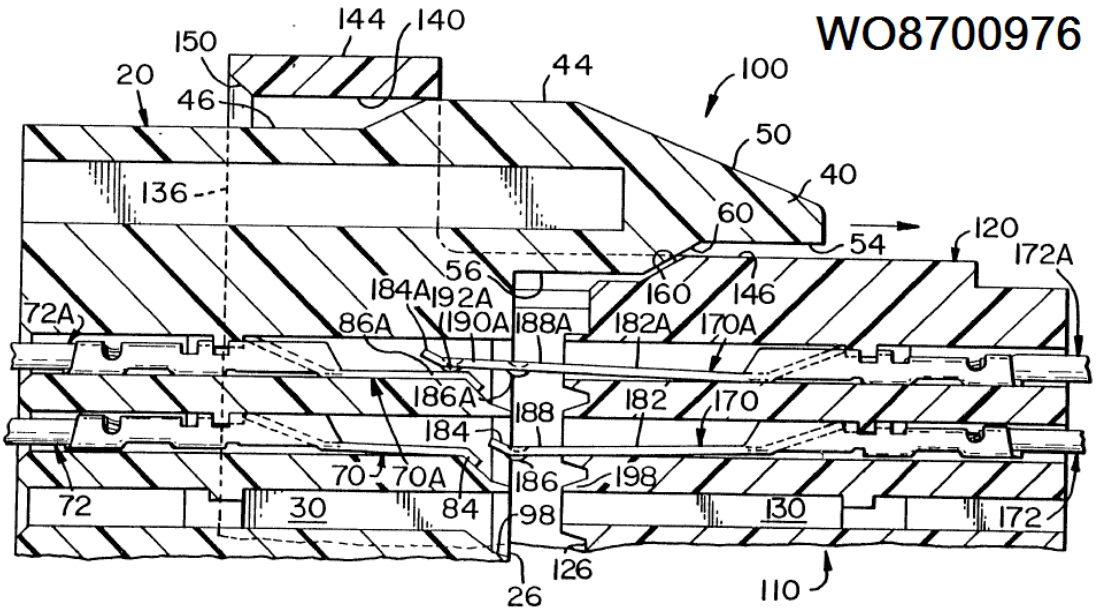

References

Limiting references

This place does not cover:

Means for increasing contact pressure at the end of engagement of coupling part combined with printed circuit boards	H01R 23/6813

H01R 13/20

Pins, blades, or sockets shaped, or provided with separate member, to retain co-operating parts together

Definition statement

This place covers:

Illustrative example of subject matter classified in H01R 13/20

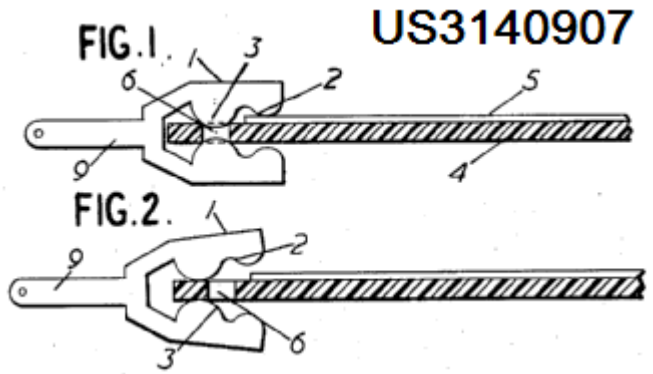

H01R 13/207

by screw-in connection

Definition statement

This place covers:

Illustrative example of subject matter classified in H01R 13/207

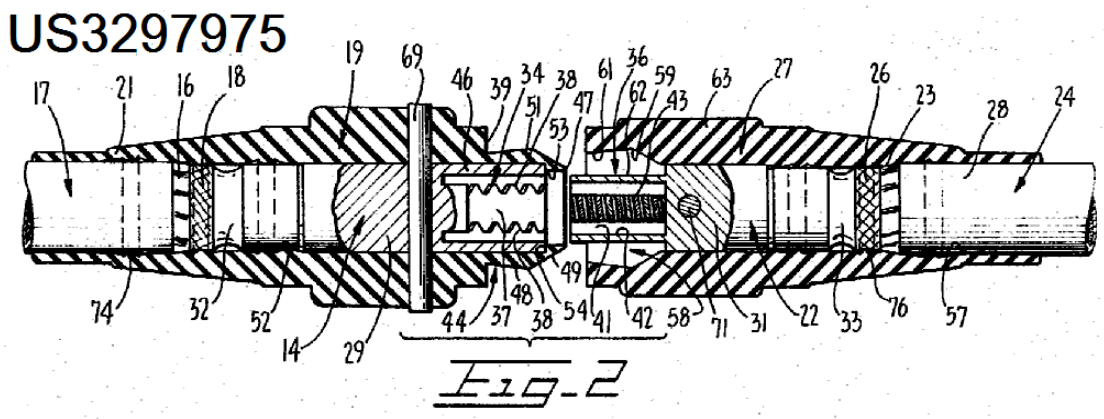

H01R 13/213

by bayonet connection

Definition statement

This place covers:

Illustrative example of subject matter classified in H01R 13/213

FR2270695

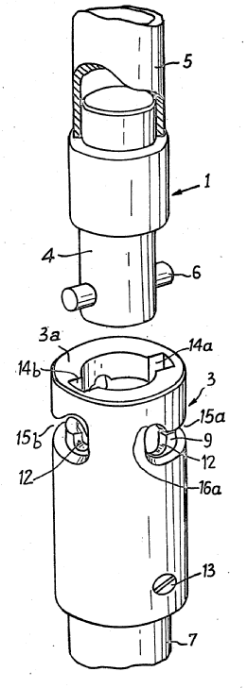

H01R 13/22

Contacts for co-operating by abutting

Definition statement

This place covers:

Illustrative example of subject matter classified in H01R 13/22

US369313

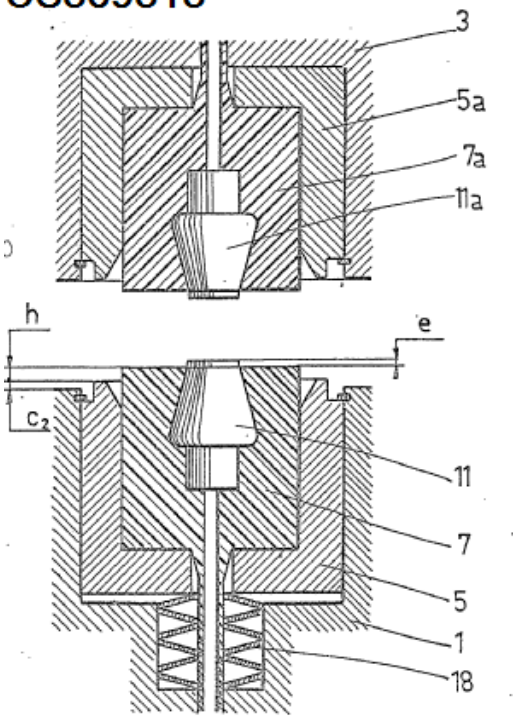

H01R 13/24

resilient; resiliently-mounted

Definition statement

This place covers:

Illustrative example of subject matter classified in H01R 13/24

DE1440804

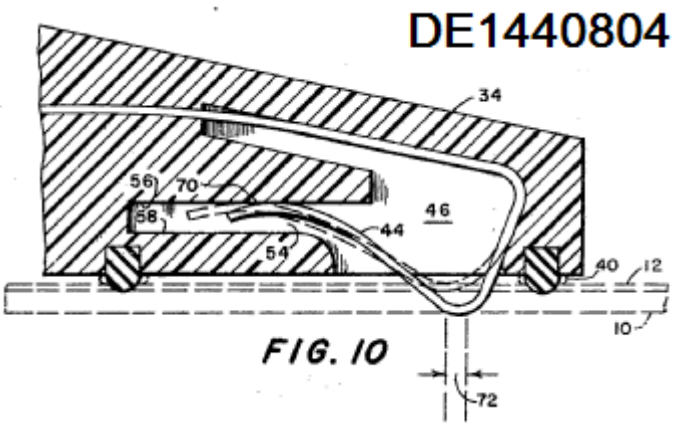

FIG. 10

H01R 13/2428

{using meander springs}

Definition statement

This place covers:

Illustrative example of subject matter classified in H01R 13/2428

:

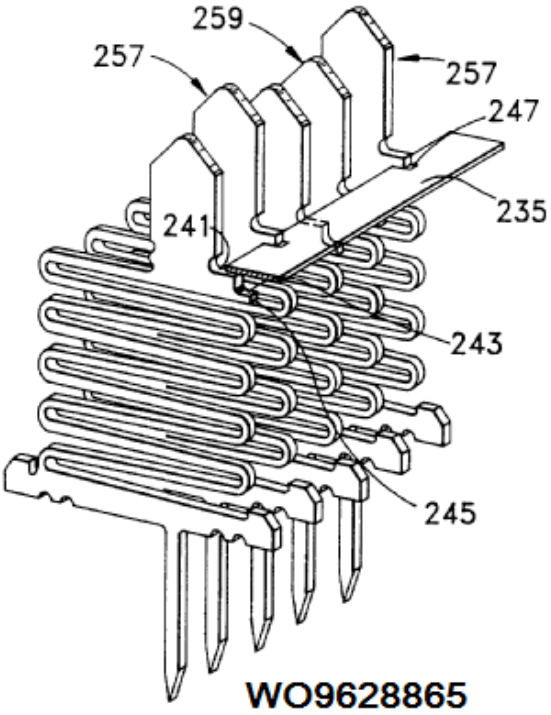

H01R 13/2435

{with opposite contact points, e.g. C beam}

Definition statement

This place covers:

Illustrative example of subject matter classified in H01R 13/2435

Patent Application Publication Jul. 5, 2007 Sheet 1 of 3 US 2007/0155196 A1

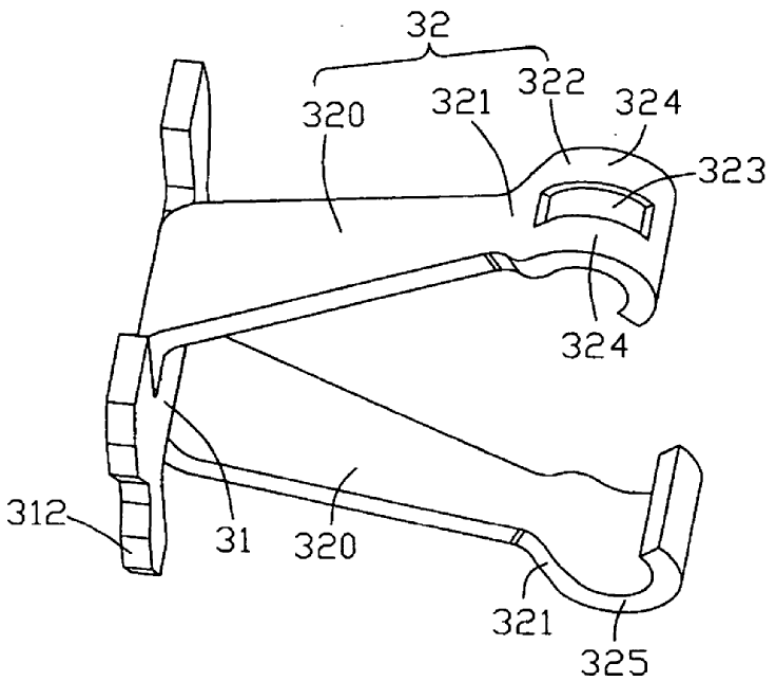

H01R 13/2442

{with a single cantilevered beam}

Definition statement

This place covers:

Illustrative example of subject matter classified in H01R 13/2442

EP 0 644 611 A1

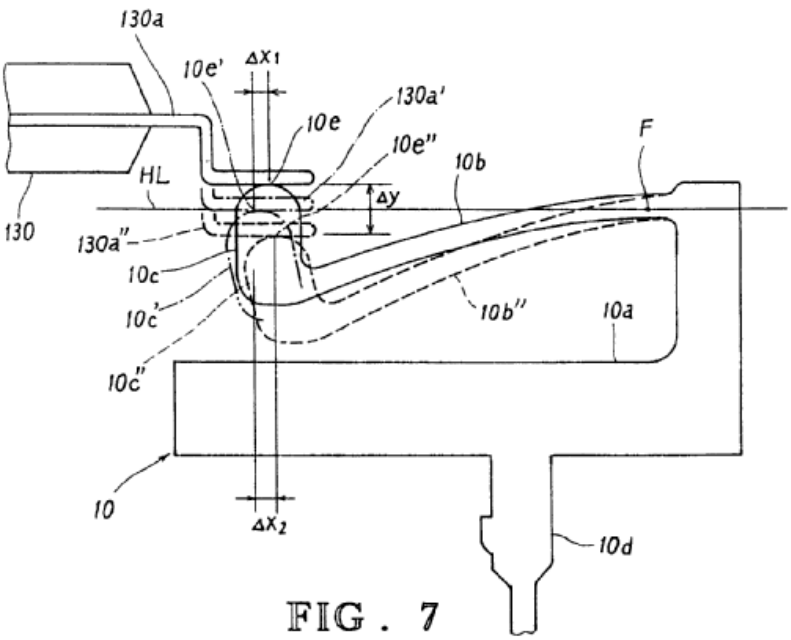

FIG. 7

H01R 13/245

{by stamped-out resilient contact arm}

Definition statement

This place covers:

Illustrative example of subject matter classified in H01R 13/245

DE 20 2008 007 038 U1 2008.08.28

Anhängende Zeichnungen

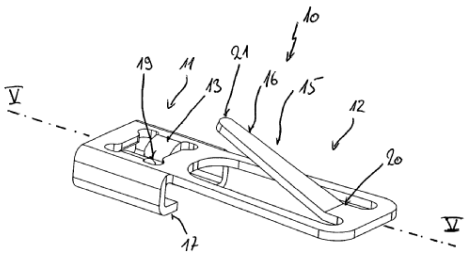

Fig. 1

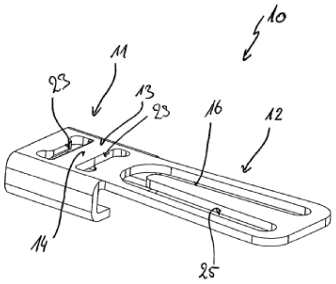

Fig. 2

H01R 13/2457

{consisting of at least two resilient arms contacting the same counterpart}

Definition statement

This place covers:

Illustrative example of subject matter classified in H01R 13/2457

EP 1 613 027 A2

FIG. 3B

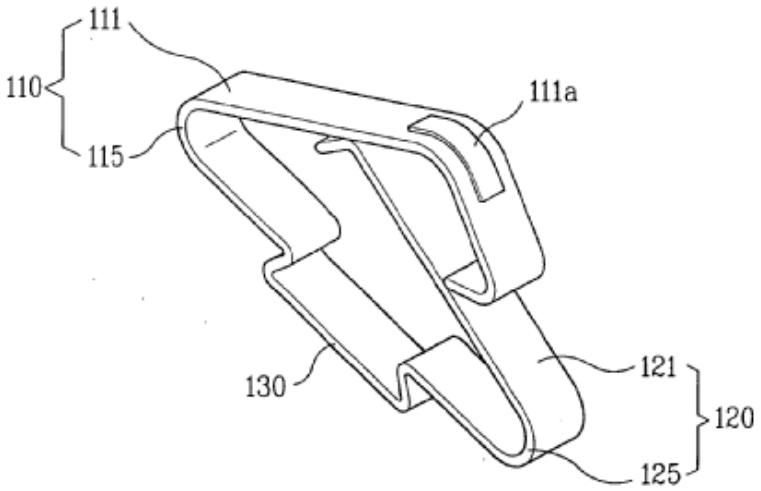

H01R 13/2464

{characterized by the contact point}

Definition statement

This place covers:

Illustrative example of subject matter classified in H01R 13/2464

DE19917308

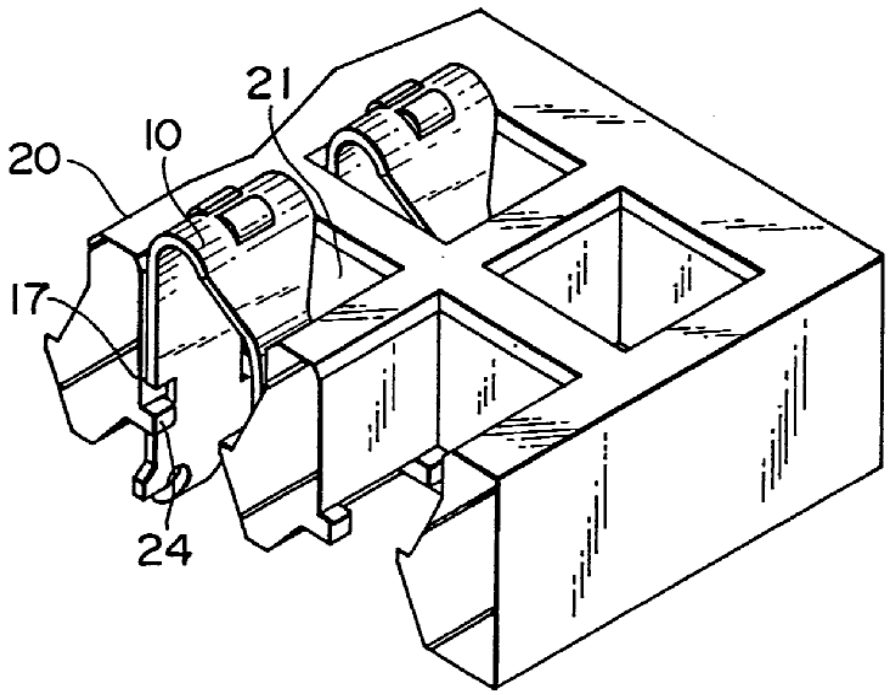

H01R 13/2471

{pin shaped}

Definition statement

This place covers:

Illustrative example of subject matter classified in H01R 13/2471

Patent Application Publication Mar. 22, 2007 Sheet 2 of 6 US 2007/0066129 A1

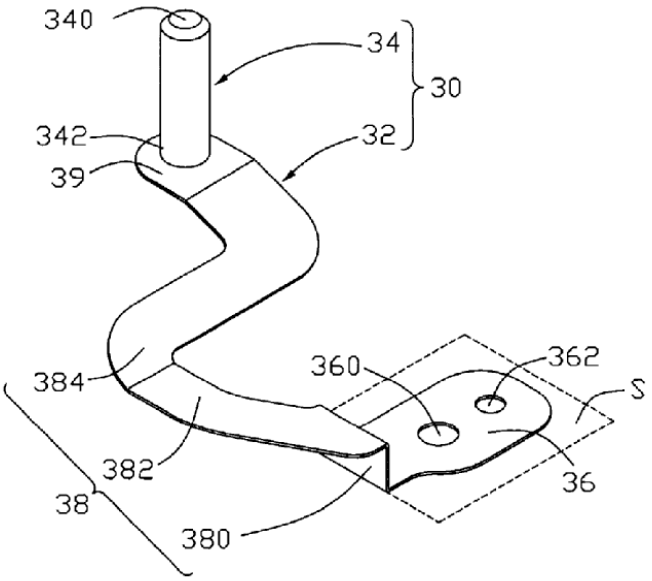

1

H01R 13/2478

{spherical}

Definition statement

This place covers:

Illustrative example of subject matter classified in H01R 13/2478

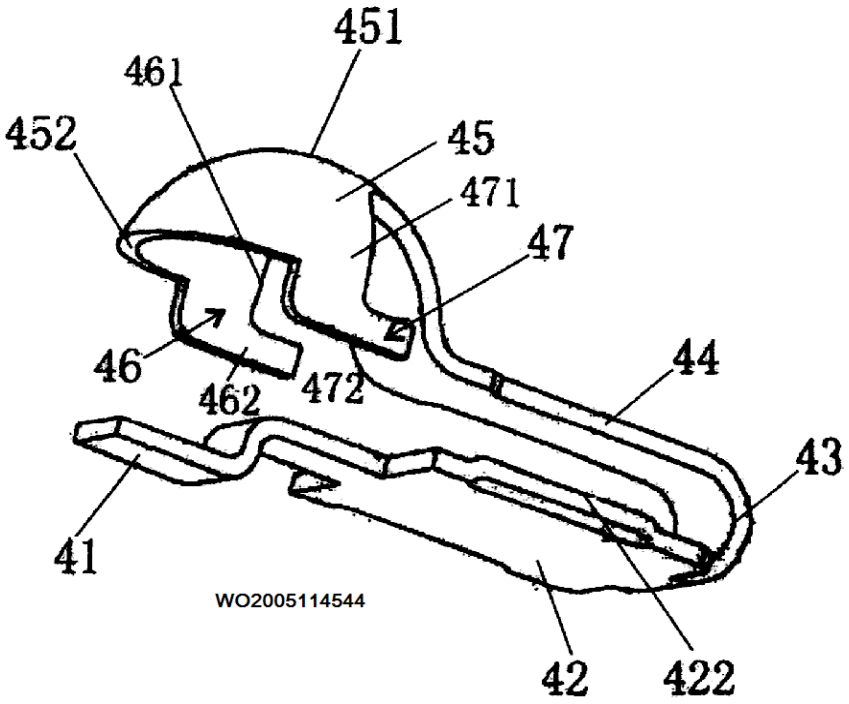

H01R 13/2485

{for contacting a ball}

Definition statement

This place covers:

Illustrative example of subject matter classified in H01R 13/2485

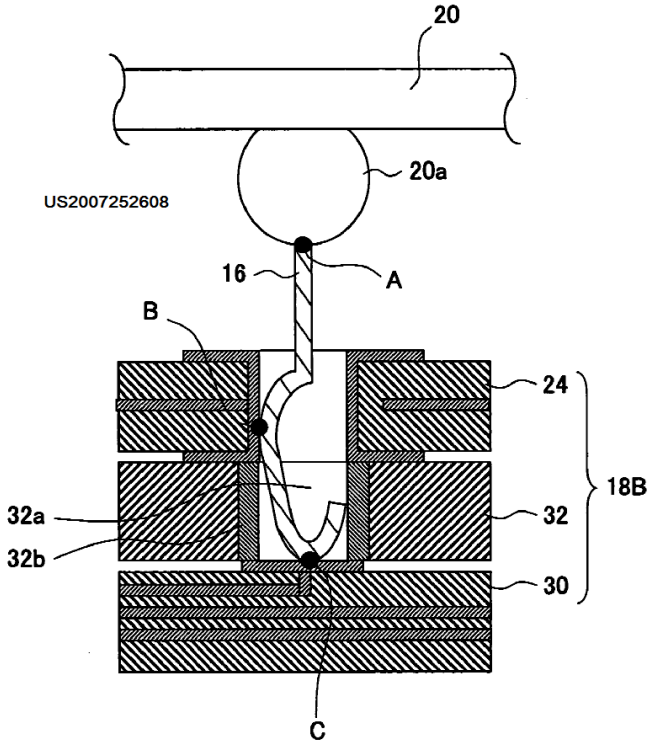

H01R 13/2492

{multiple contact points}

Definition statement

This place covers:

Illustrative example of subject matter classified in H01R 13/2492

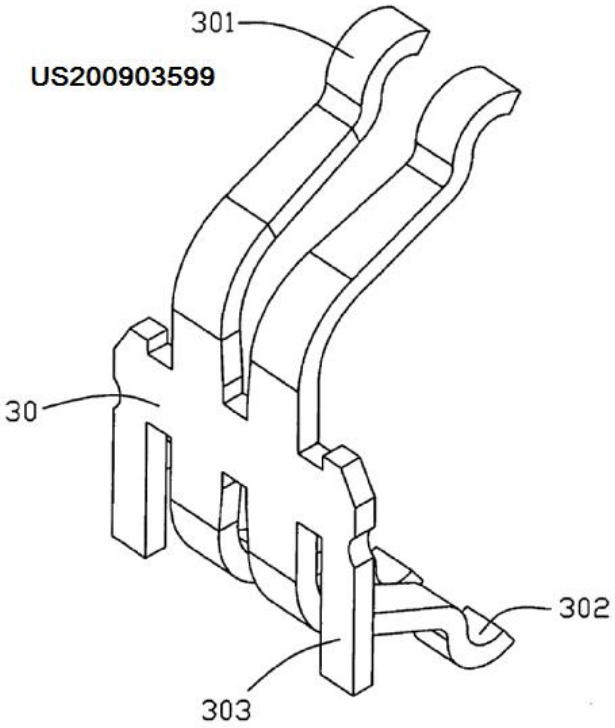

EP 0 716 474 A1

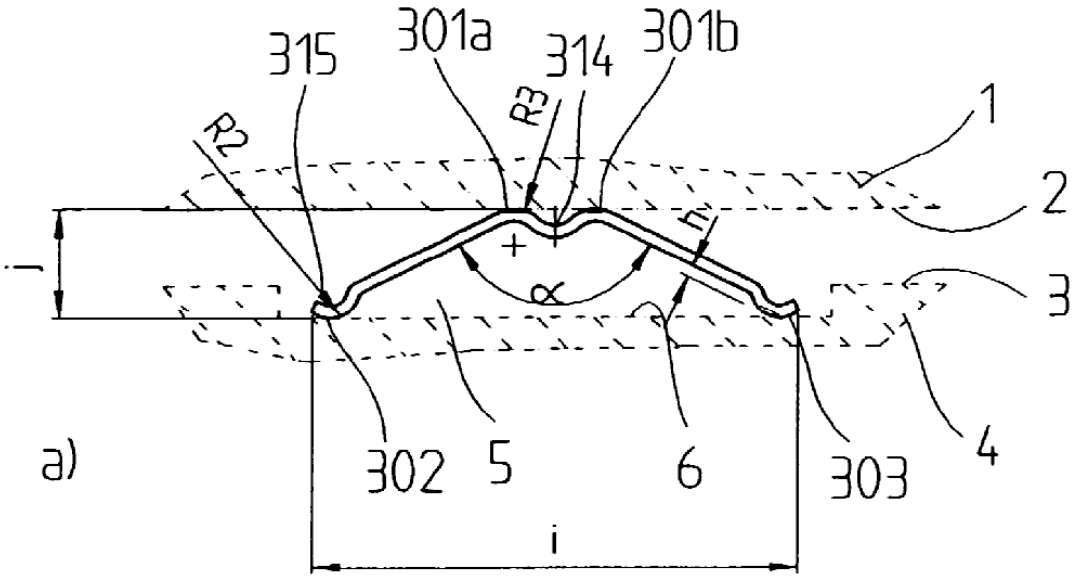

H01R 13/26

Pin or blade contacts for sliding co-operation on one side only {(for modular jack type connectors H01R 24/62)}

Definition statement

This place covers:

Illustrative example of subject matter classified in H01R 13/26

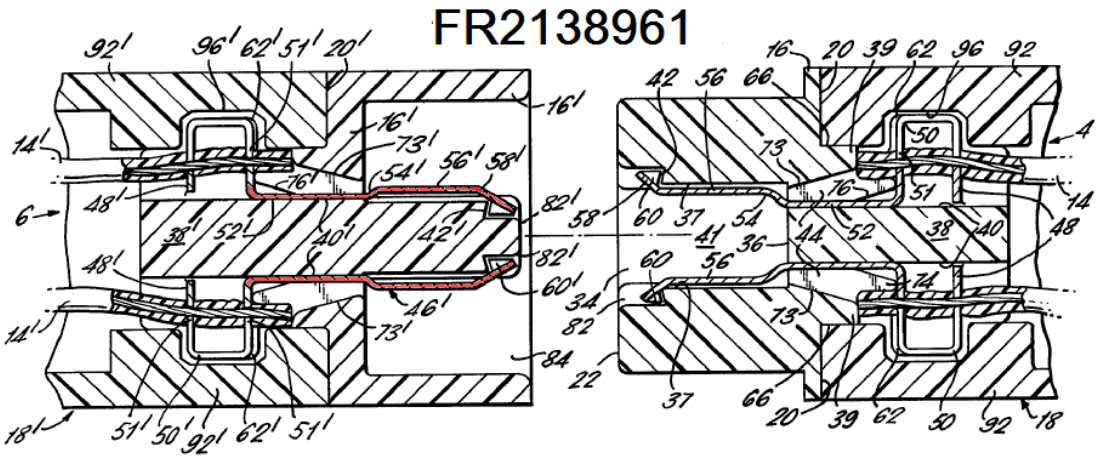

References

Limiting references

This place does not cover:

Pin or blade contacts for sliding co-operation for modular jack type connectors	H01R 24/62

H01R 13/28

Contacts for sliding cooperation with identically-shaped contact, e.g. for hermaphroditic coupling devices {(H01R 24/84 takes precedence)}

Definition statement

This place covers:

Illustrative example of subject matter classified in H01R 13/28

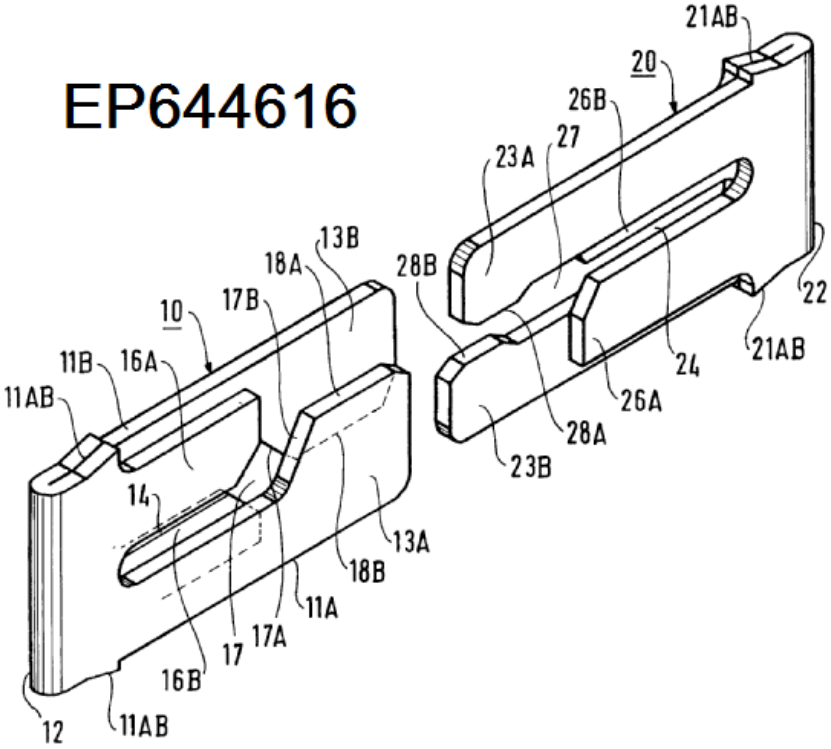

References

Limiting references

This place does not cover:

Hermaphroditic coupling devices	H01R 24/84

H01R 13/33

Contact members made of resilient wire

Definition statement

This place covers:

Illustrative example of subject matter classified in H01R 13/33

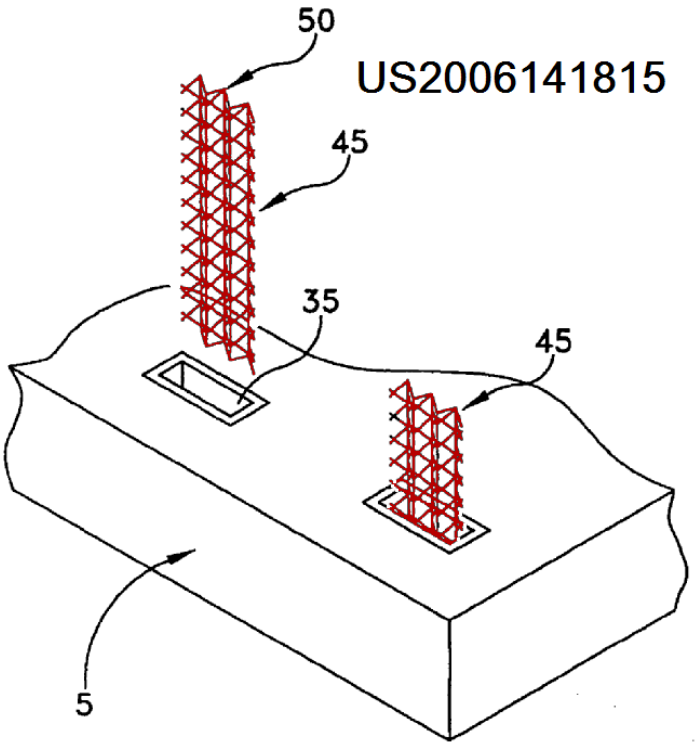

H01R 13/35

for non-simultaneous co-operation with different types of contact member, e.g. socket co-operation with either round or flat pin {(H01R 27/00 takes precedence)}

References

Limiting references

This place does not cover:

Coupling parts adapted for co-operation with two or more dissimilar counterparts	H01R 27/00

H01R 13/405

Securing in non-demountable manner, e.g. moulding, riveting

Definition statement

This place covers:

Illustrative example of subject matter classified in H01R 13/405

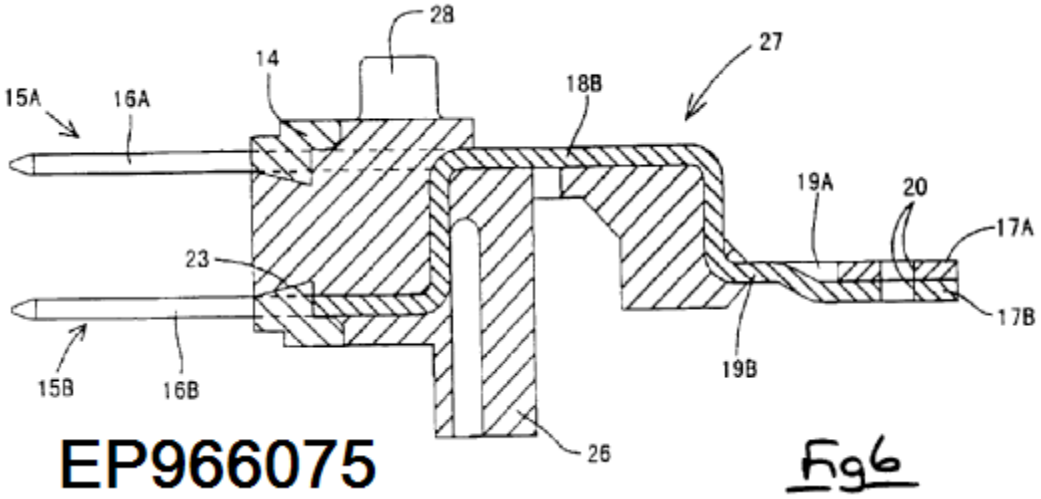

H01R 13/41

by frictional grip in grommet, panel or base

Definition statement

This place covers:

Illustrative example of subject matter classified in H01R 13/41

WO2009050982

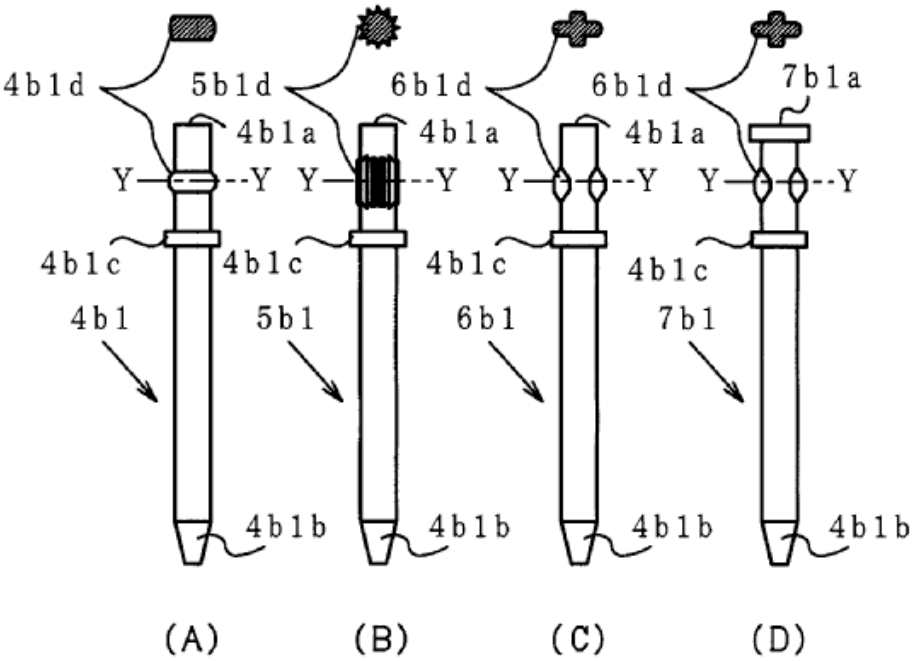

H01R 13/415

by permanent deformation of contact member

Definition statement

This place covers:

Illustrative example of subject matter classified in H01R 13/415

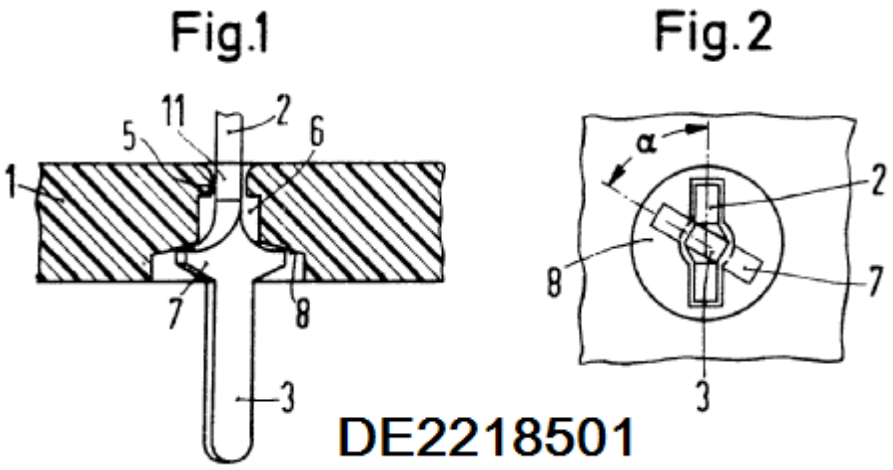

H01R 13/42

Securing in a demountable manner

Definition statement

This place covers:

Illustrative example of subject matter classified in H01R 13/42

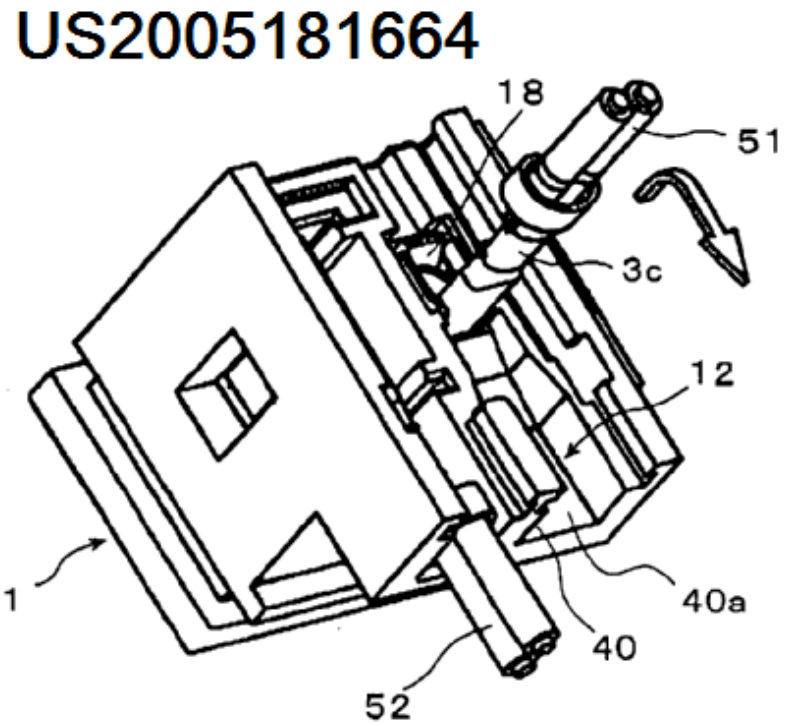

H01R 13/422

Securing in resilient one-piece base or case, {e.g. by friction}; One-piece base or case formed with resilient locking means

Definition statement

This place covers:

Illustrative example of subject matter classified in H01R 13/422

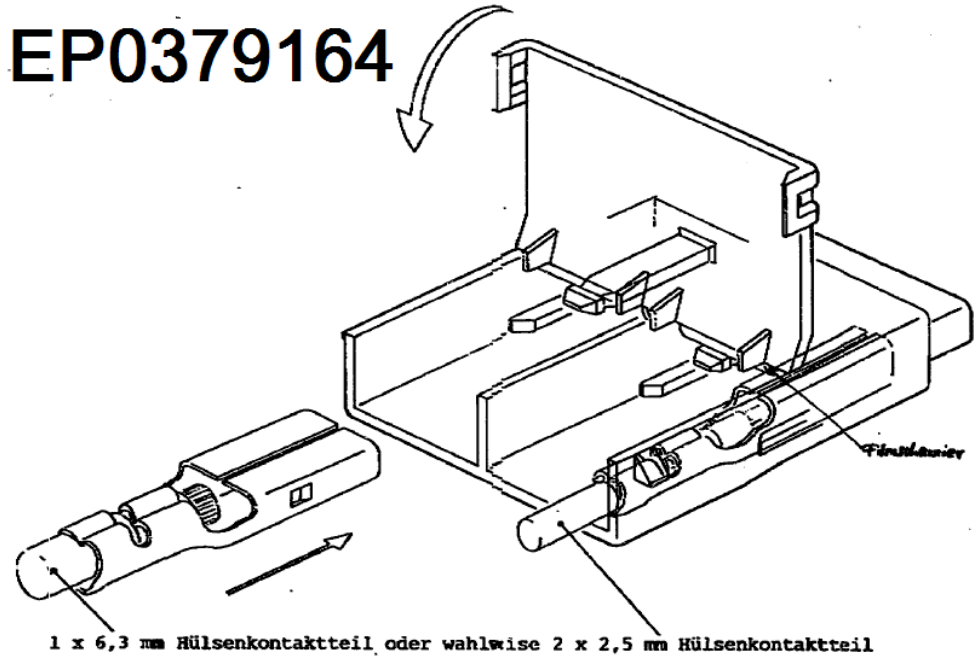

H01R 13/4223

{comprising integral flexible contact retaining fingers}

Definition statement

This place covers:

Illustrative example of subject matter classified in H01R 13/4223

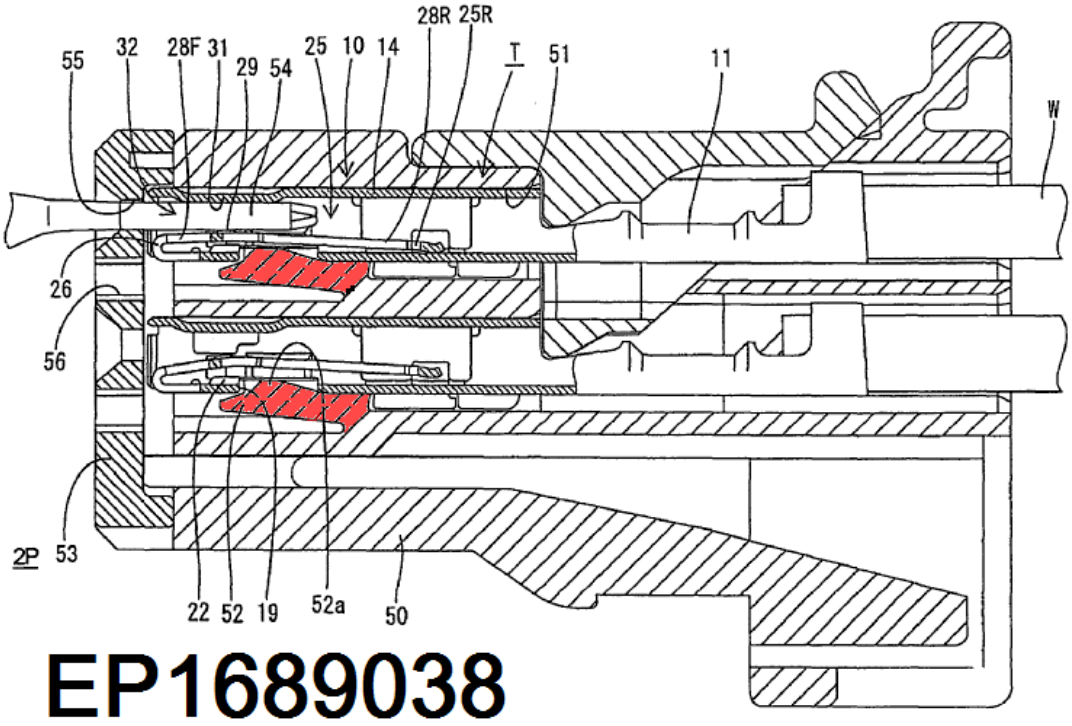

H01R 13/424

Securing in base or case composed of a plurality of insulating parts having at least one resilient insulating part

Definition statement

This place covers:

Illustrative example of subject matter classified in H01R 13/424

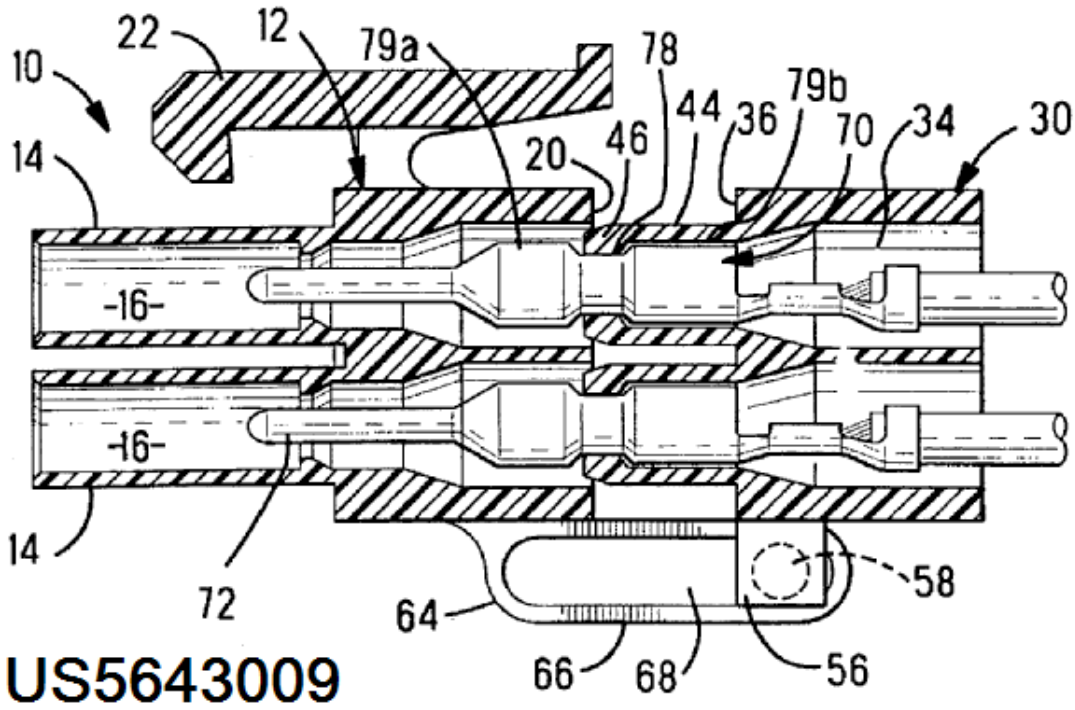

H01R 13/426

Securing by a separate resilient retaining piece supported by base or case, e.g. collar {or metal contact-retention clip}

Definition statement

This place covers:

Illustrative example of subject matter classified in H01R 13/426

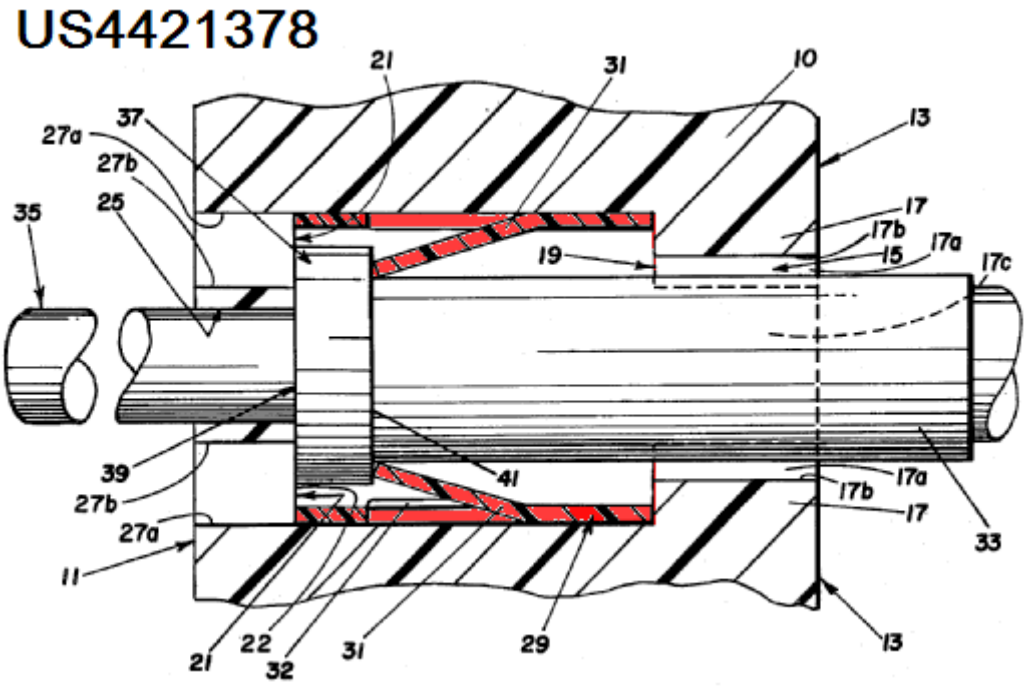

H01R 13/428

by resilient locking means on the contact members; by locking means on resilient contact members

Definition statement

This place covers:

Illustrative example of subject matter classified in H01R 13/428

FR1411828

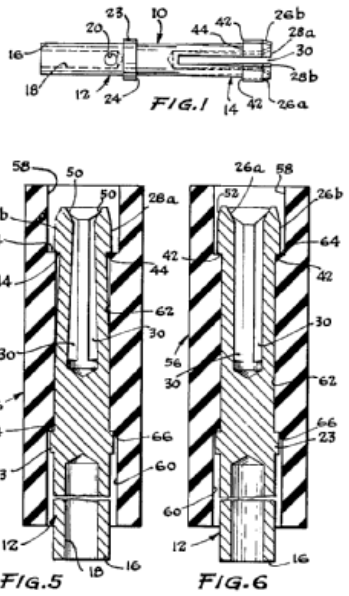

H01R 13/432

by stamped-out resilient tongue snapping behind shoulder in base or case

Definition statement

This place covers:

Illustrative example of subject matter classified in H01R 13/432

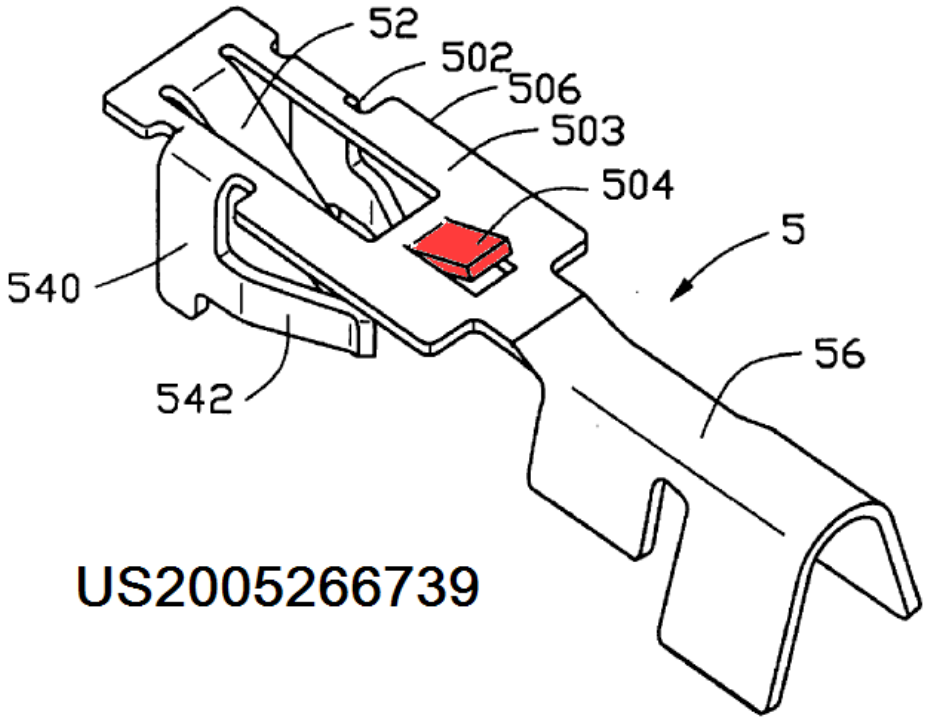

H01R 13/434

by separate resilient locking means on contact member, e.g. retainer collar or ring around contact member

Definition statement

This place covers:

Illustrative example of subject matter classified in H01R 13/434

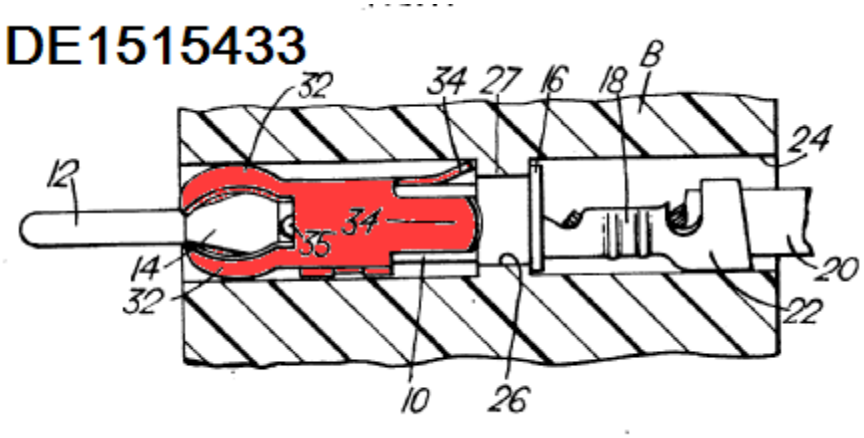

H01R 13/4362

{comprising a temporary and a final locking position}

Definition statement

This place covers:

Illustrative example of subject matter classified in H01R 13/4362

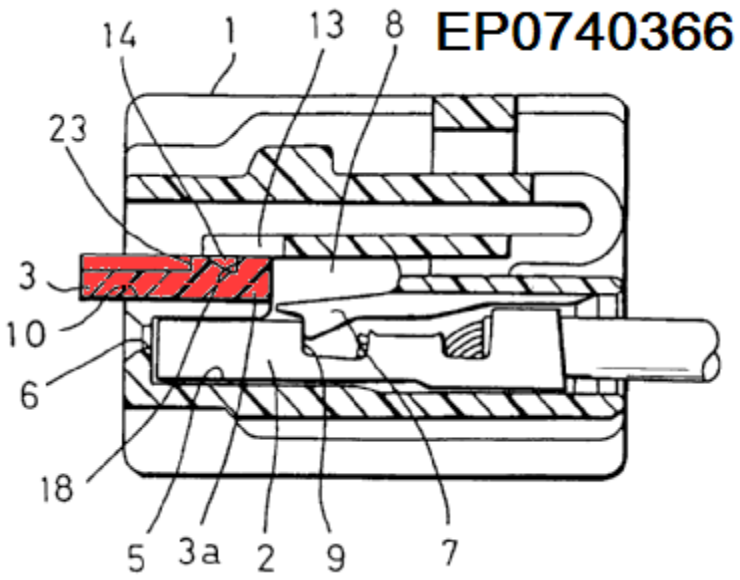

H01R 13/44

Means for preventing access to live contacts {(making use of a switch actuated by engagement of counterpart H01R 13/7036)}

Definition statement

This place covers:

Bases;Cases; Security means

References

Limiting references

This place does not cover:

Making use of a switch actuated by engagement of counterpart	H01R 13/7036

H01R 13/443

Dummy Plugs

Definition statement

This place covers:

Illustrative example of subject matter classified in H01R 13/443

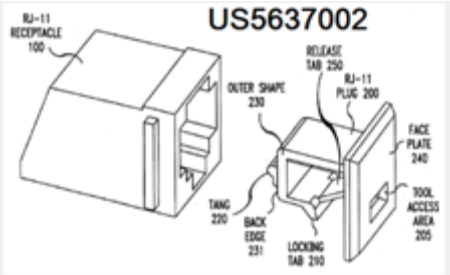

H01R 13/447

Shutter or cover plate

Definition statement

This place covers:

Illustrative example of subject matter classified in H01R 13/447

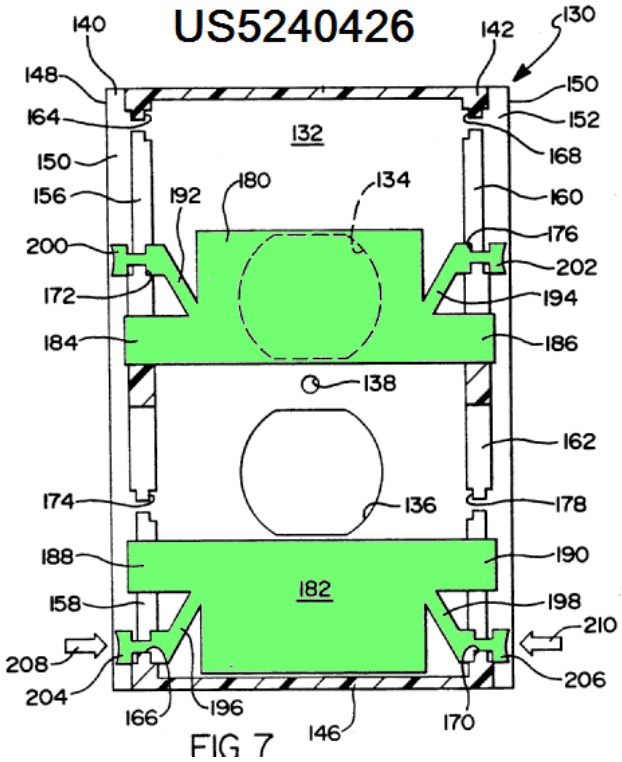

FIG 7

H01R 13/4534

{Laterally sliding shutter}

Definition statement

This place covers:

Illustrative example of subject matter classified in H01R 13/4534

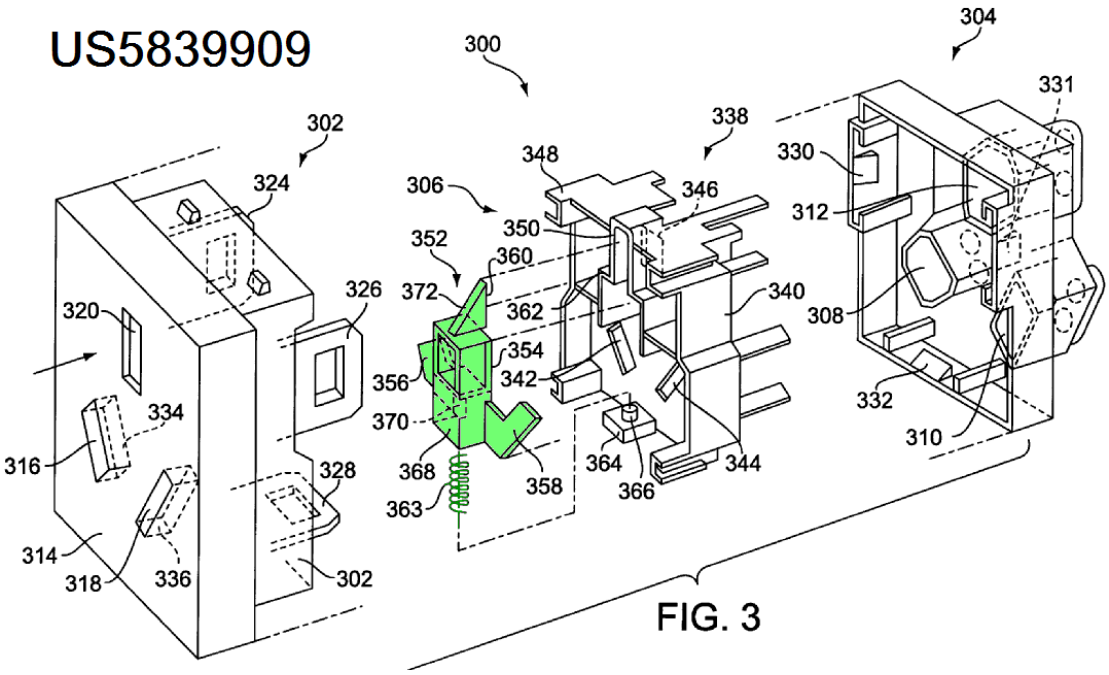

FIG. 3

H01R 13/465

{Identification means, e.g. labels, tags, markings (H01R 9/2475, H01R 9/2683 take precedence)}

References

Limiting references

This place does not cover:

Means facilitating correct wiring, e.g. marking plates, identification tags	H01R 9/2475
Marking plates or tabs	H01R 9/2683

H01R 13/50

formed as an integral body (H01R 13/514 takes precedence)

Definition statement

This place covers:

Illustrative example of subject matter classified in H01R 13/50

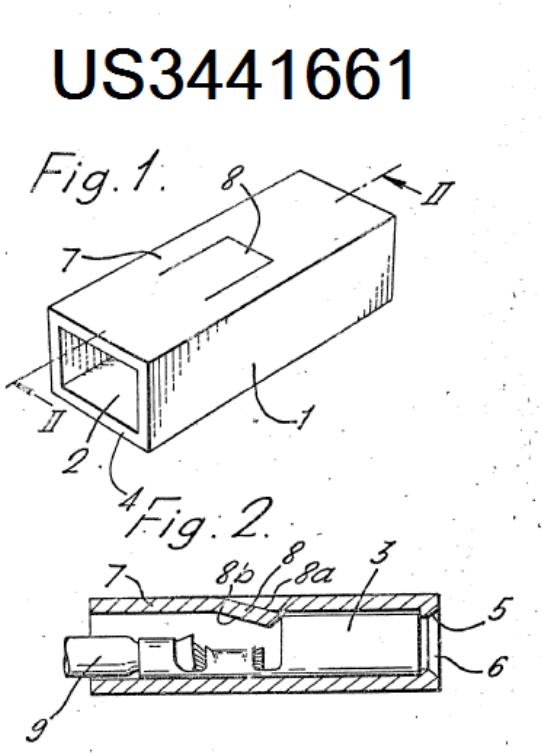

References

Limiting references

This place does not cover:

Bases or cases composed as a modular blocks or assembly	H01R 13/514

H01R 13/501

{comprising an integral hinge or a frangible part}

Definition statement

This place covers:

Illustrative example of subject matter classified in H01R 13/501

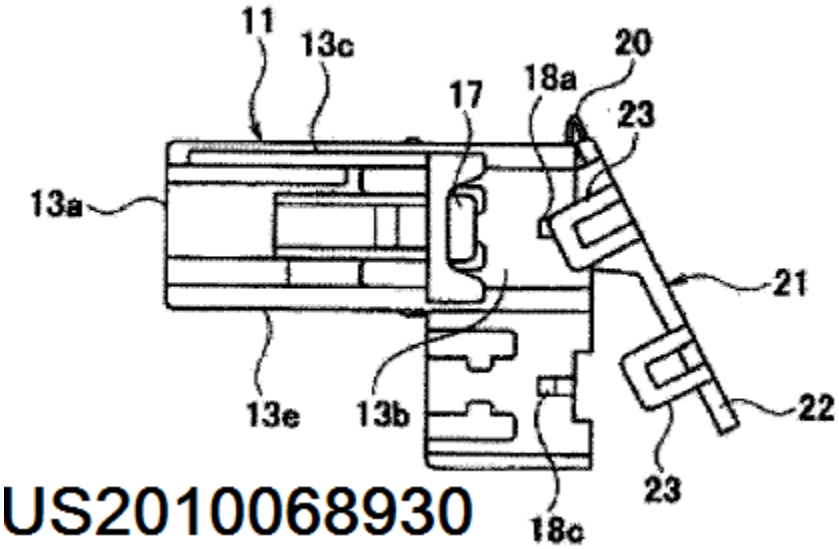

H01R 13/502

composed of different pieces (H01R 13/514 takes precedence)

References

Limiting references

This place does not cover:

Bases or cases composed as a modular blocks or assembly	H01R 13/514

H01R 13/5025

{one or more pieces being of resilient material}

Definition statement

This place covers:

Illustrative example of subject matter classified in H01R 13/5025

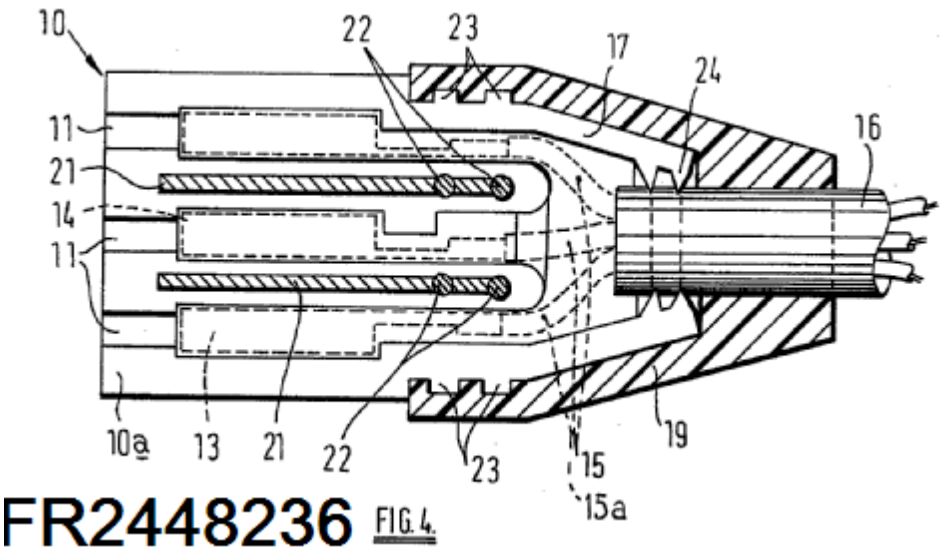

H01R 13/504

different pieces being moulded, cemented, welded, e.g. ultrasonic, or swaged together

Definition statement

This place covers:

Illustrative example of subject matter classified in H01R 13/504

FR2687853

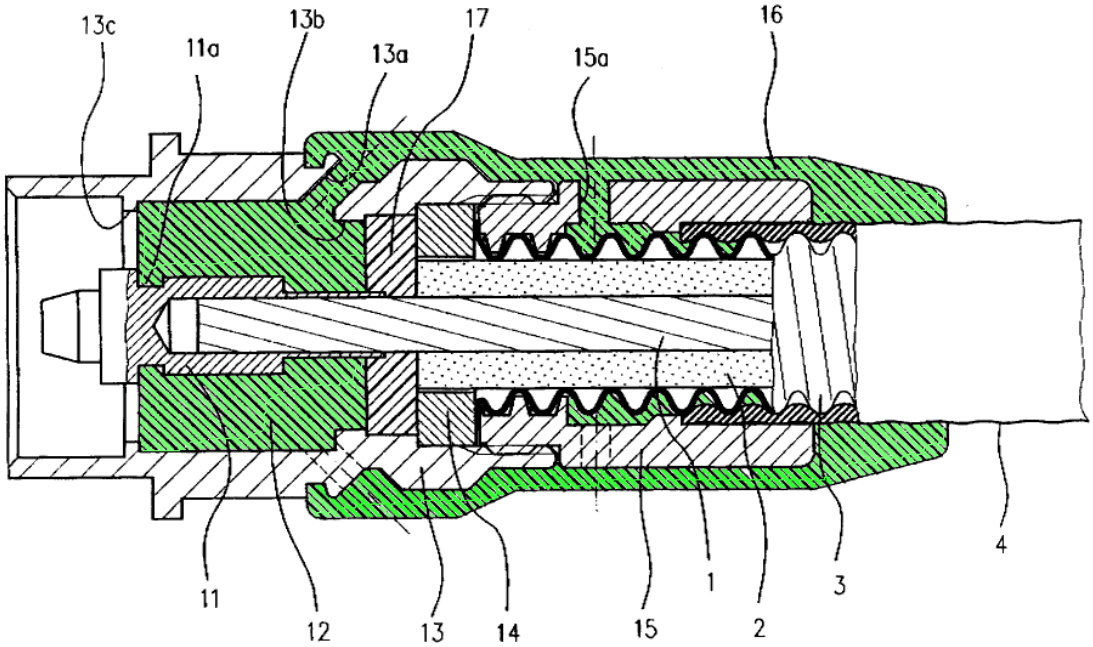

H01R 13/506

assembled by snap action of the parts

Definition statement

This place covers:

Illustrative example of subject matter classified in H01R 13/506

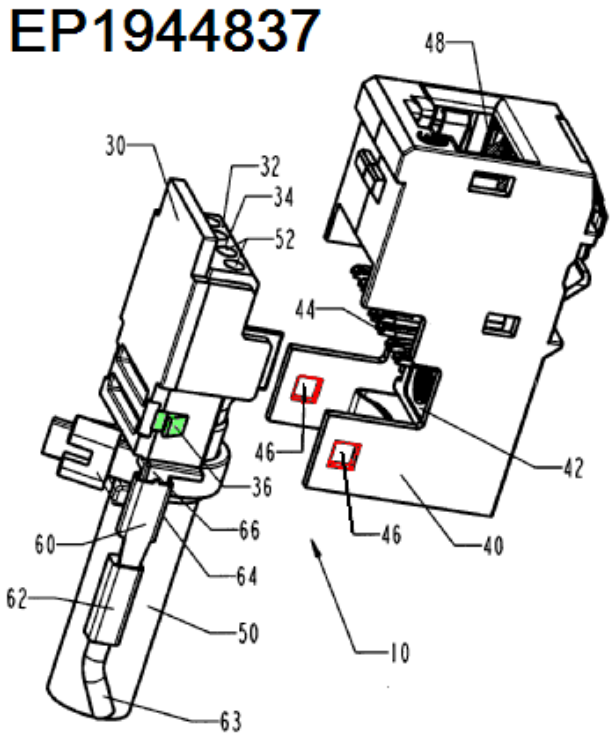

H01R 13/508

assembled by {a separate} clip or spring

Definition statement

This place covers:

Illustrative example of subject matter classified in H01R 13/508

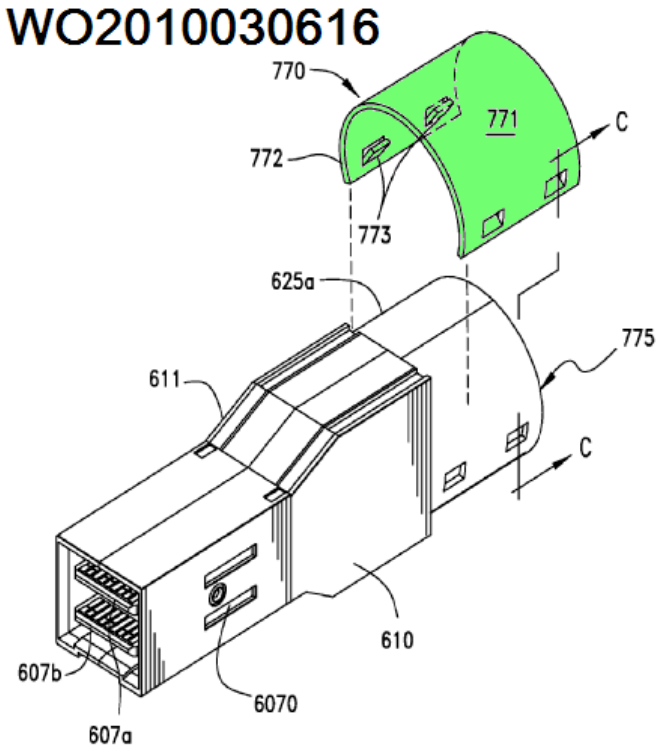

H01R 13/512

assembled by screw or screws

Definition statement

This place covers:

Illustrative example of subject matter classified in H01R 13/512

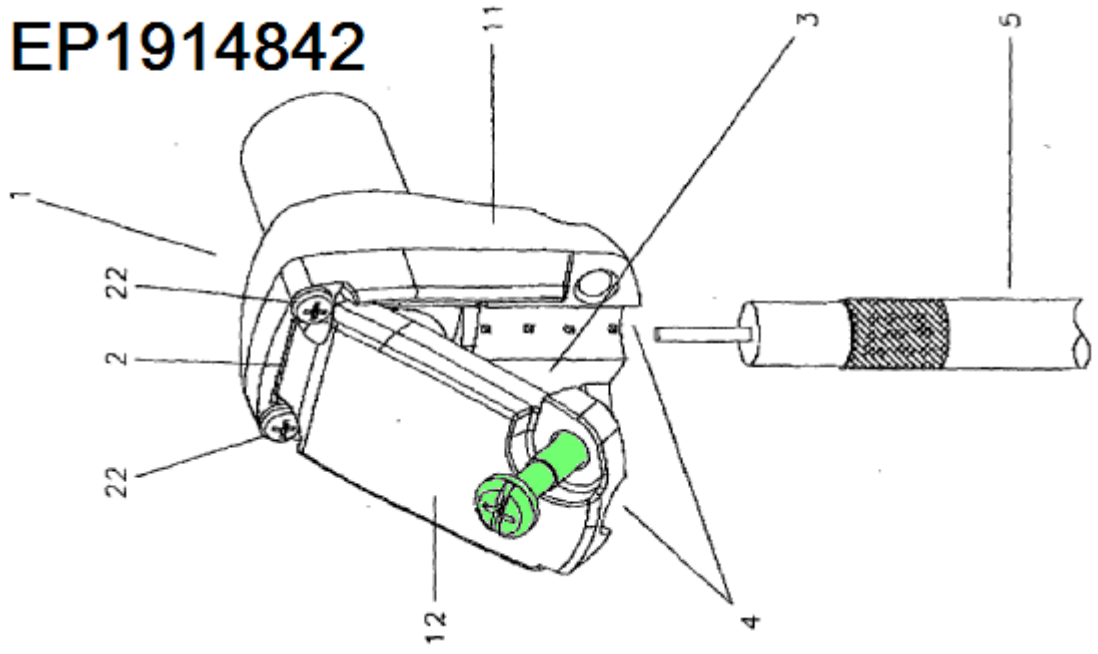

H01R 13/514

composed as a modular blocks or assembly, i.e. composed of co-operating parts provided with contact members or holding contact members between them

Definition statement

This place covers:

Illustrative example of subject matter classified in H01R 13/514

US2009197448

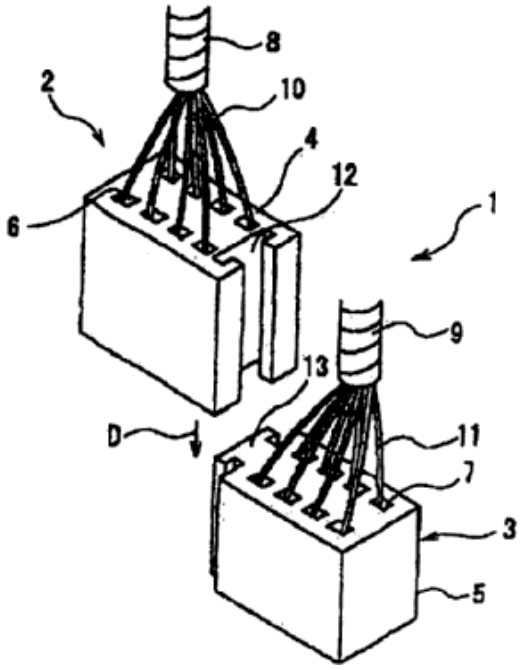

H01R 13/516

Means for holding or embracing insulating body, e.g. casing, {hoods}

Definition statement

This place covers:

Illustrative example of subject matter classified in H01R 13/516

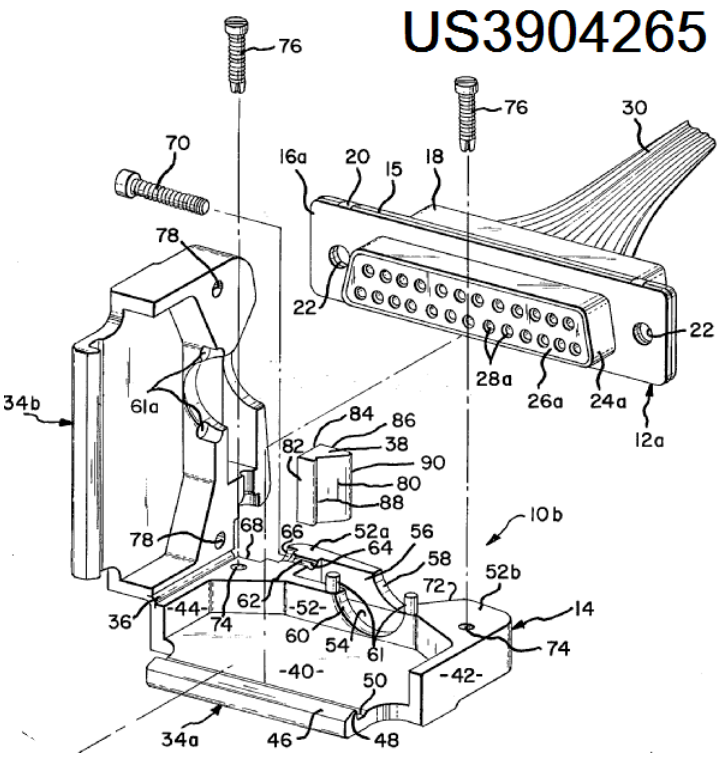

H01R 13/518

for holding or embracing several coupling parts, e.g. frames

Definition statement

This place covers:

Illustrative example of subject matter classified in H01R 13/518

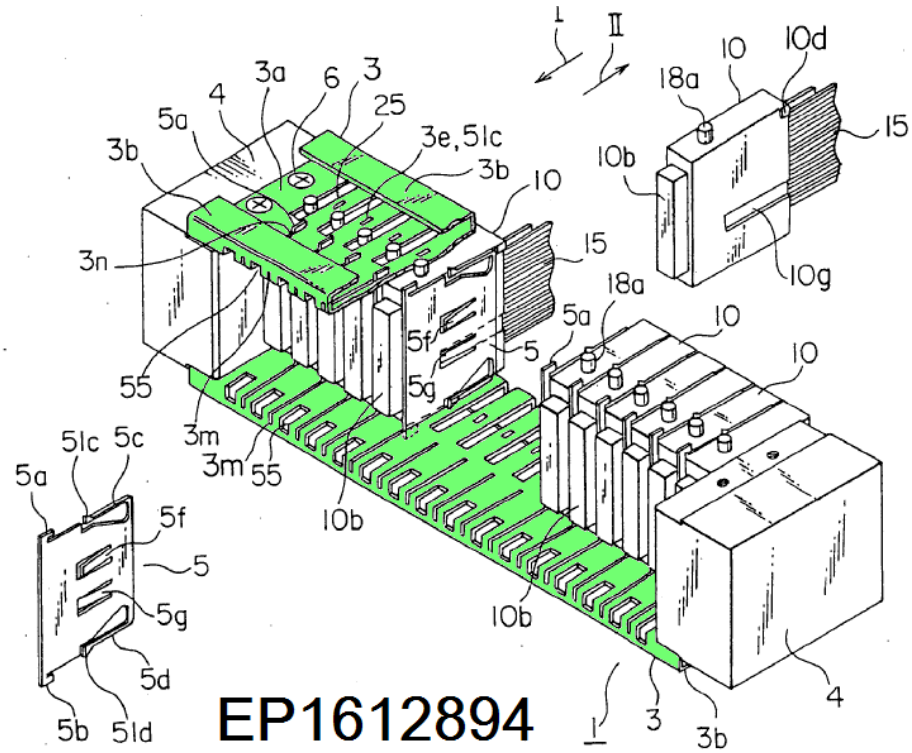

H01R 13/5205

{Sealing means between cable and housing, e.g. grommet (H01R 13/5221 takes precedence)}

References

Limiting references

This place does not cover:

Sealing means between coupling parts having cable sealing means	H01R 13/5221

H01R 13/5208

{having at least two cable receiving openings}

Definition statement

This place covers:

Illustrative example of subject matter classified in H01R 13/5208

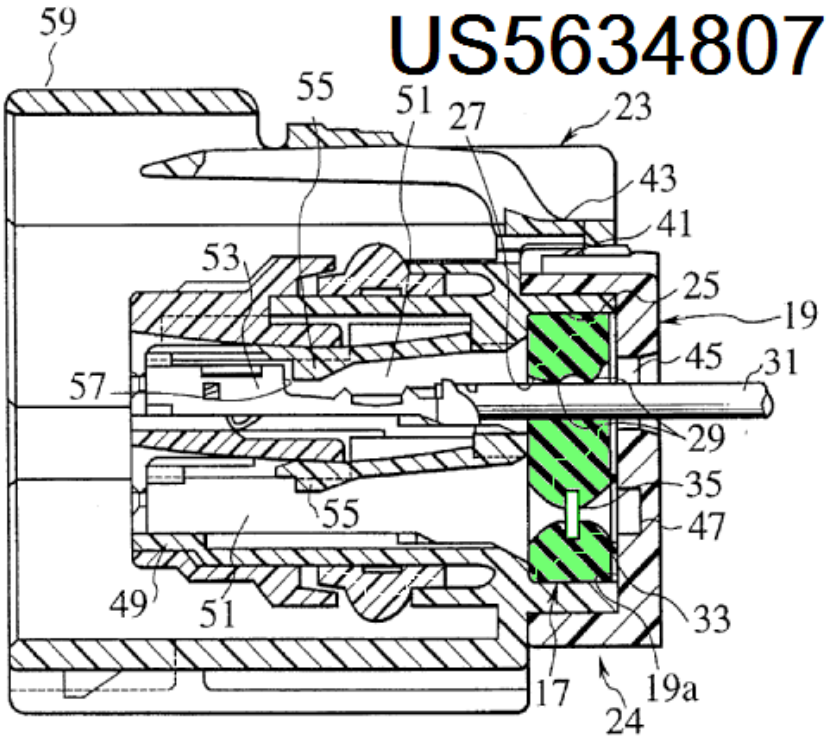

H01R 13/523

for use under water

Definition statement

This place covers:

Illustrative example of subject matter classified in H01R 13/523

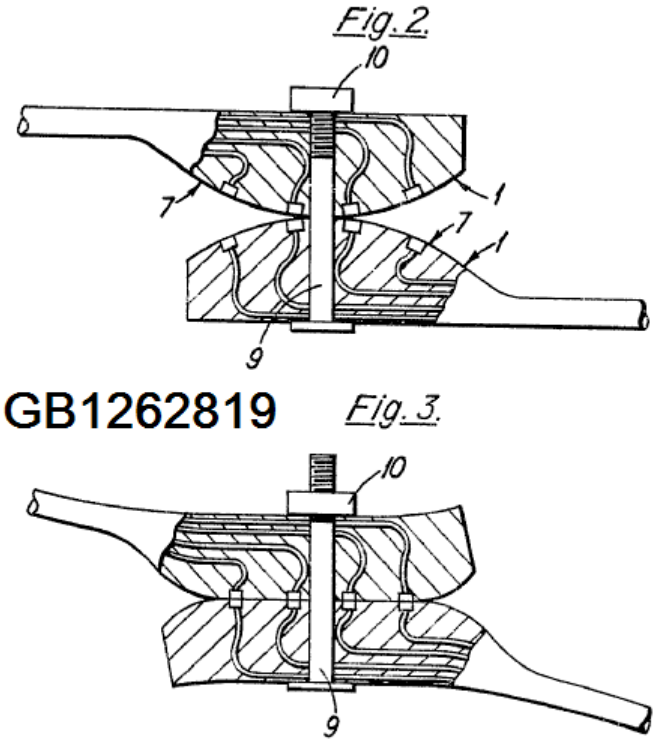

H01R 13/527

Flameproof cases (H01R 13/70 takes precedence)

Definition statement

This place covers:

Illustrative example of subject matter classified in H01R 13/527

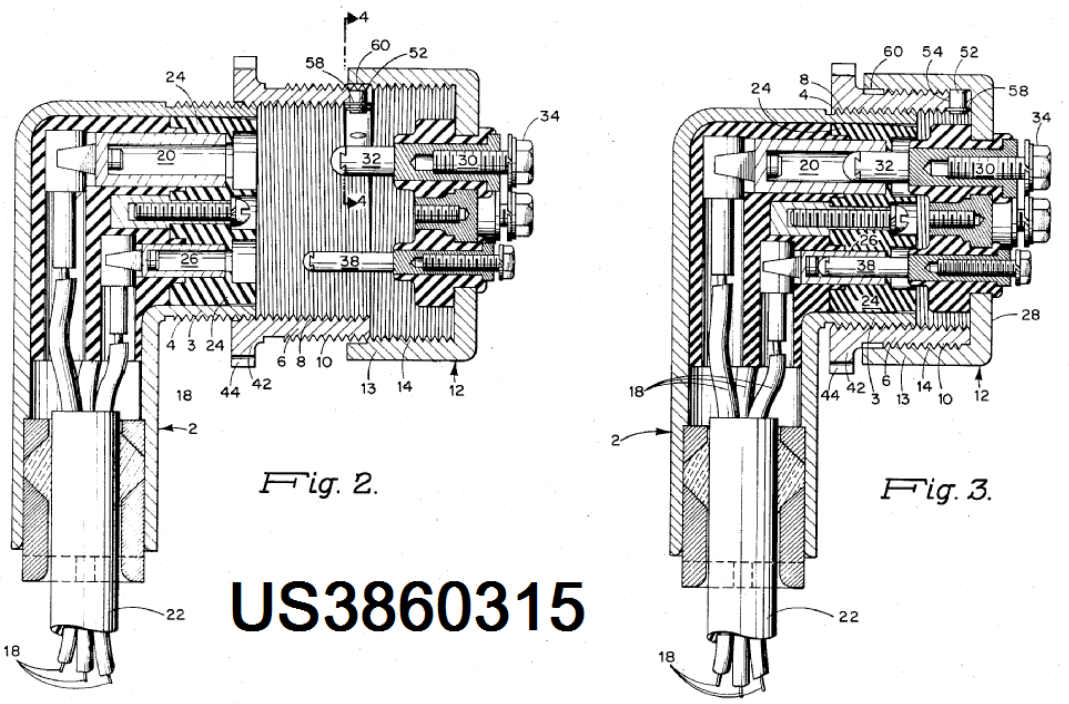

References

Limiting references

This place does not cover:

Structural association with built-in electrical component with built-in switch	H01R 13/70

H01R 13/53

Bases or cases for heavy duty; Bases or cases {for high voltage} with means for preventing corona or arcing

Definition statement

This place covers:

Illustrative example of subject matter classified in H01R 13/53

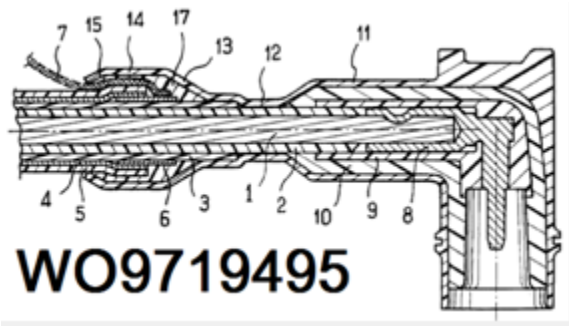

H01R 13/533

Bases, cases made for use in extreme conditions, e.g. high temperature, radiation, vibration, corrosive environment, pressure (H01R 13/52 takes precedence)

Definition statement

This place covers:

Illustrative example of subject matter classified in H01R 13/533

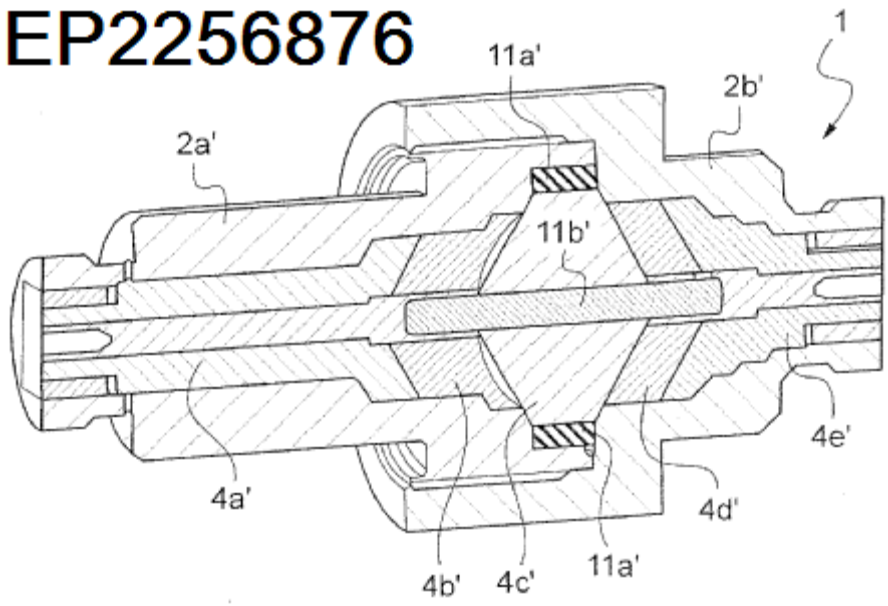

References

Limiting references

This place does not cover:

Dustproof, splashproof, drip-proof, waterproof, or flameproof cases	H01R 13/52

H01R 13/562

{Bending-relieving}

Definition statement

This place covers:

Illustrative example of subject matter classified in H01R 13/562

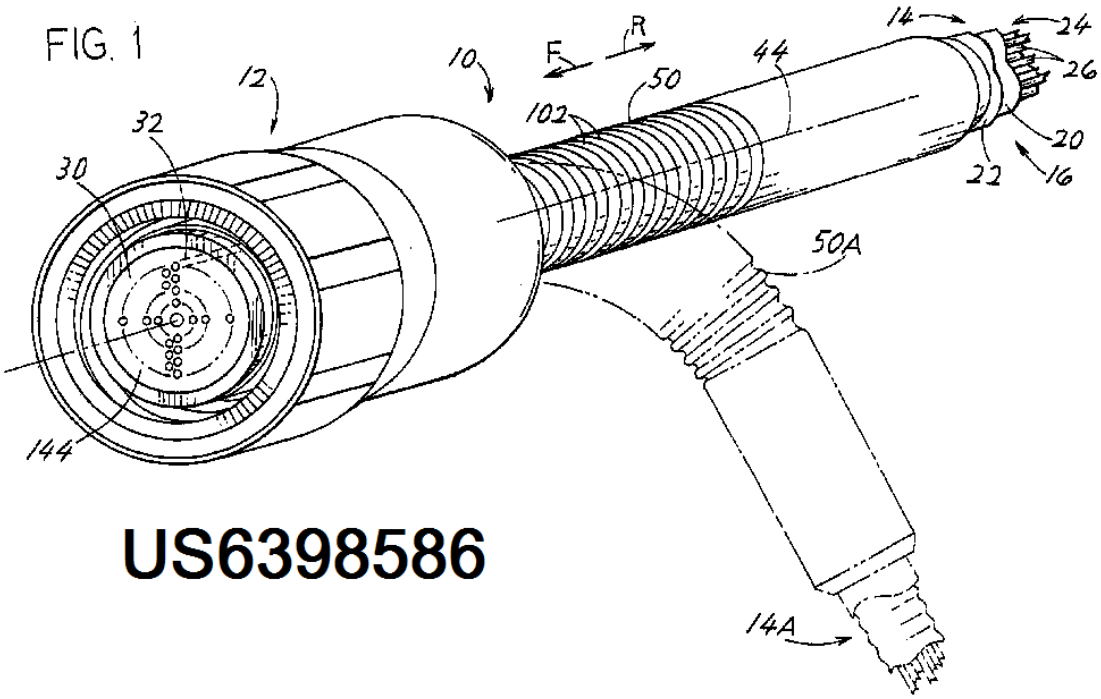

US6398586

H01R 13/58

Means for relieving strain on wire connection, e.g. cord grip, {for avoiding loosening of connections between wires and terminals within a coupling device terminating a cable (for flat or ribbon cables H01R 12/771; for distribution boxes H02G 3/0616)}

References

Limiting references

This place does not cover:

Means for avoiding loosening of connections between wires and terminals within a coupling device terminating a cable for flat or ribbon cables	H01R 12/771;
For distribution boxes	H02G 3/0616

H01R 13/5804

{comprising a separate cable clamping part (H01R 13/5841 takes precedence)}

Definition statement

This place covers:

Illustrative example of subject matter classified in H01R 13/5804

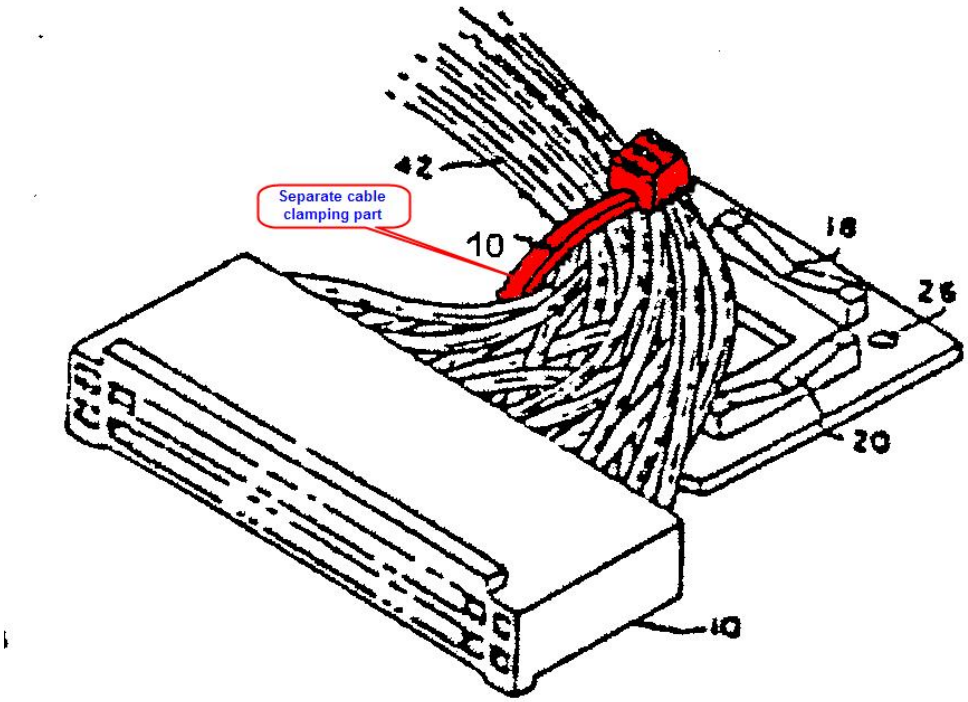

References

Limiting references

This place does not cover:

Means for relieving strain on wire connection, allowing different orientations of the cable with respect to the coupling direction	H01R 13/5841

H01R 13/5808

{formed by a metallic element crimped around the cable (H01R 4/185 takes precedence)}

Definition statement

This place covers:

Illustrative example of subject matter classified in H01R 13/5808

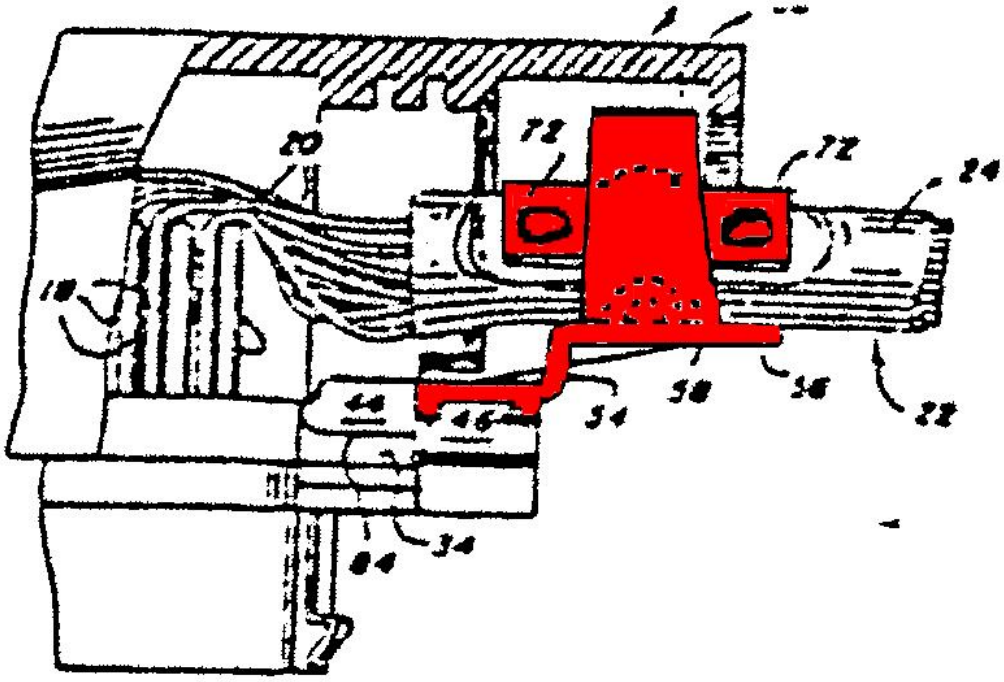

References

Limiting references

This place does not cover:

Crimping for cylindrical elongated bodies comprising a U-shaped wire-receiving portion	H01R 4/184

H01R 13/5812

{the cable clamping being achieved by mounting the separate part on the housing of the coupling device}

Definition statement

This place covers:

Illustrative example of subject matter classified in H01R 13/5812

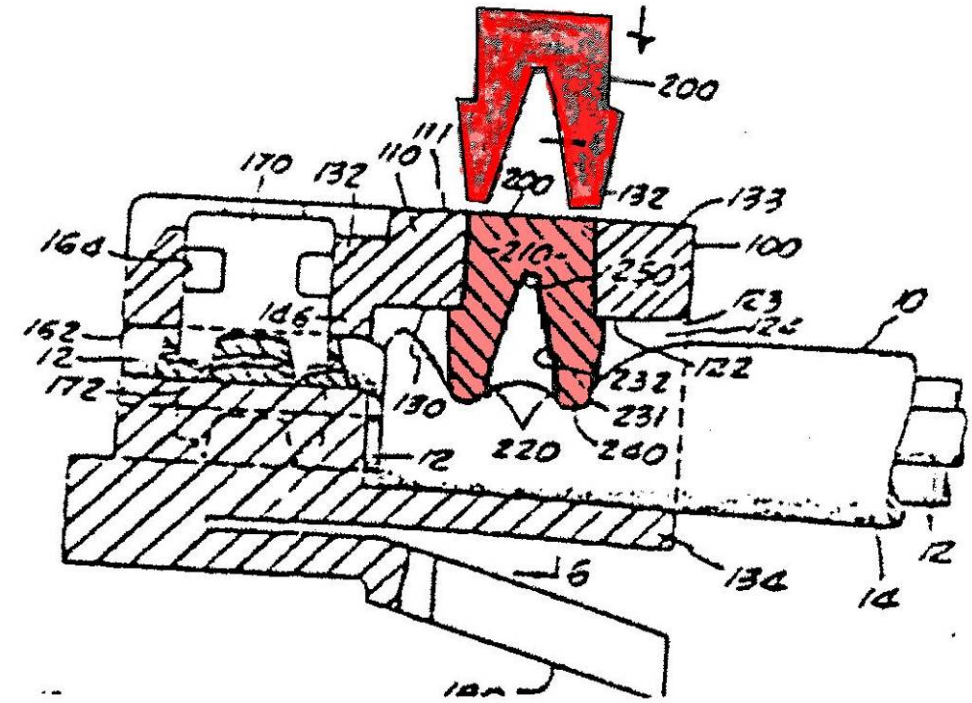

H01R 13/5816

{for cables passing through an aperture in a housing wall, the separate part being captured between cable and contour of aperture (in general H01B 17/586)}

Definition statement

This place covers:

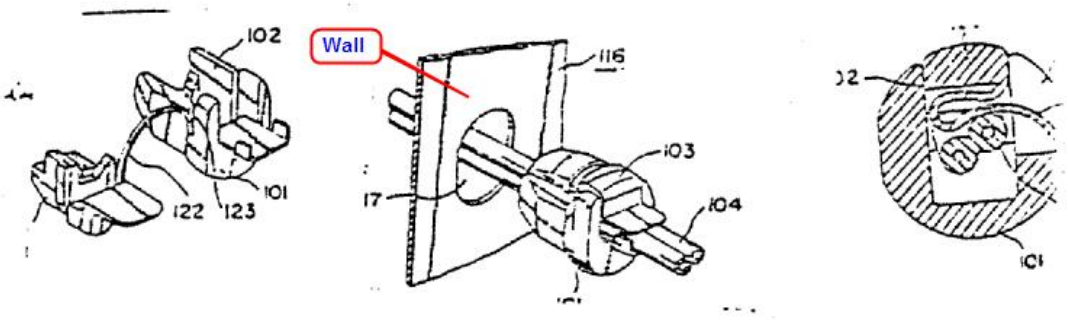

References

Limiting references

This place does not cover:

In general	H01B 17/586

H01R 13/582

{the cable being clamped between assembled parts of the housing}

Definition statement

This place covers:

Illustrative example of subject matter classified in H01R 13/582

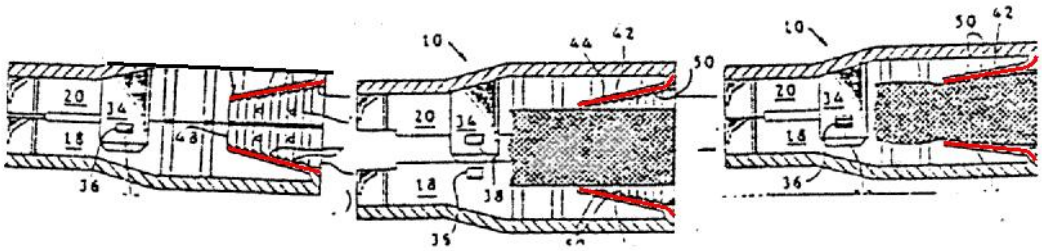

H01R 13/5825

{the means comprising additional parts captured between housing parts and cable}

Definition statement

This place covers:

Illustrative example of subject matter classified in H01R 13/5825

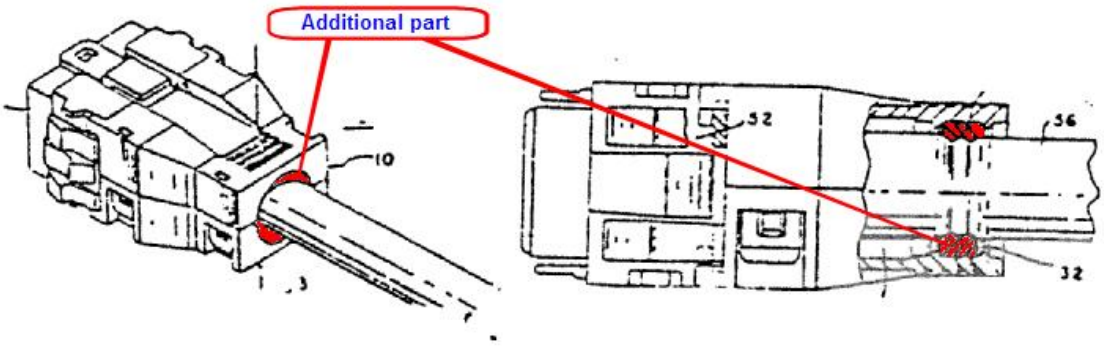

H01R 13/5829

{the clamping part being flexibly or hingedly connected to the housing}

Definition statement

This place covers:

Illustrative example of subject matter classified in H01R 13/5829

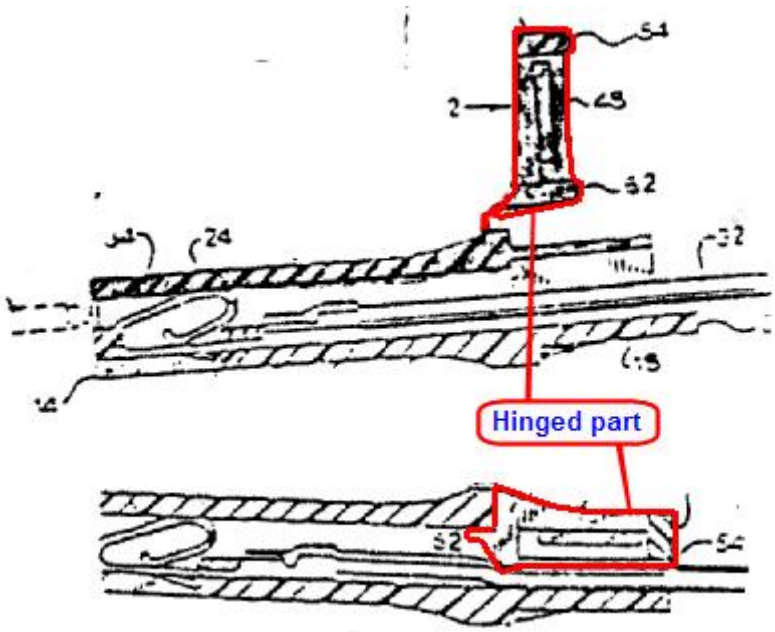

H01R 13/5833

{the cable being forced in a tortuous or curved path, e.g. knots in cable (H01R 13/582 takes precedence)}

Definition statement

This place covers:

Illustrative example of subject matter classified in H01R 13/5833

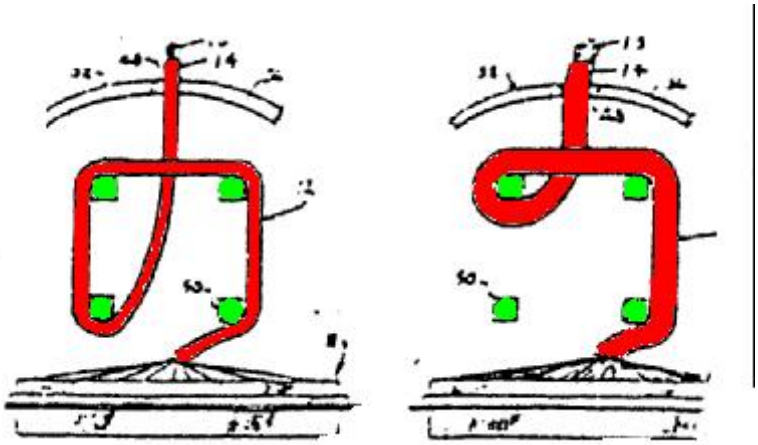

References

Limiting references

This place does not cover:

Means for relieving strain on wire connection, the cable being clamped between assembled parts of the housing	H01R 13/582

H01R 13/5837

{specially adapted for accommodating various sized cables (H01R 13/5825 takes precedence)}

Definition statement

This place covers:

Illustrative example of subject matter classified in H01R 13/5837

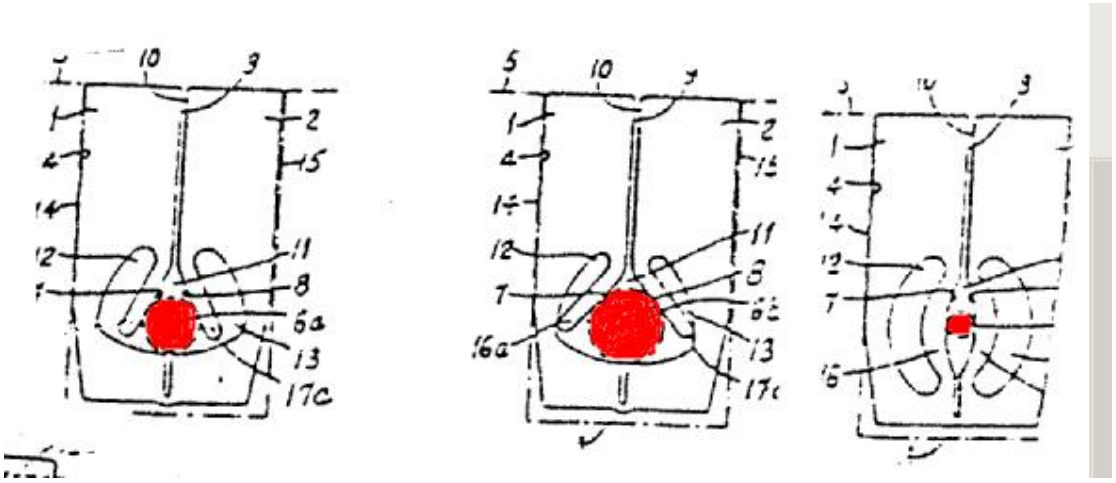

References

Limiting references

This place does not cover:

Means for relieving strain on wire connection, the cable being clamped between assembled parts of the housing, the means comprising additional parts captured between housing parts and cable	H01R 13/582

H01R 13/5841

{allowing different orientations of the cable with respect to the coupling direction}

Definition statement

This place covers:

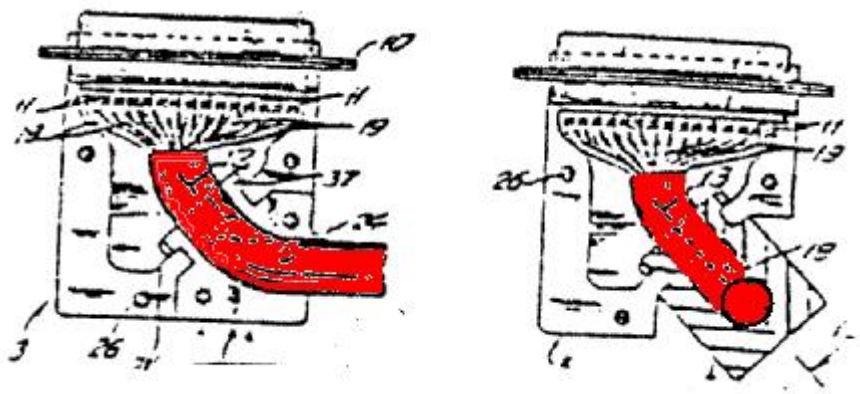

H01R 13/5845

{the strain relief being achieved by molding parts around cable and connections}

Definition statement

This place covers:

Illustrative example of subject matter classified in H01R 13/5845

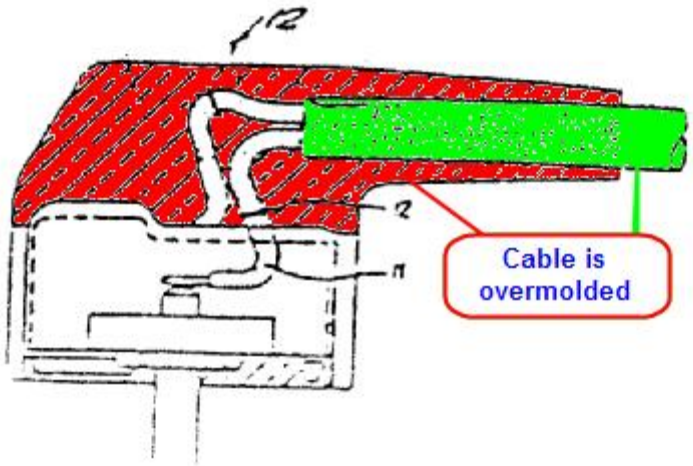

H01R 13/585

Grip increasing with strain force

Definition statement

This place covers:

Illustrative example of subject matter classified in H01R 13/585

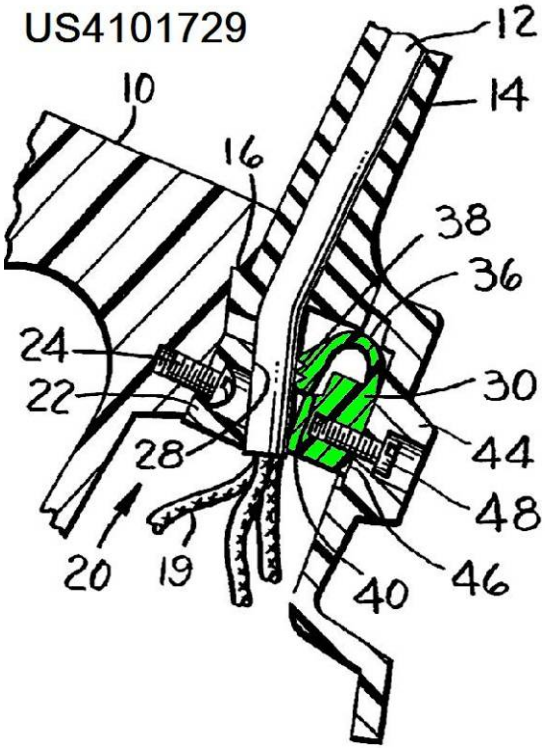

H01R 13/59

Threaded ferrule or bolt operating in a direction parallel to the cable or wire

Definition statement

This place covers:

Illustrative example of subject matter classified in H01R 13/59

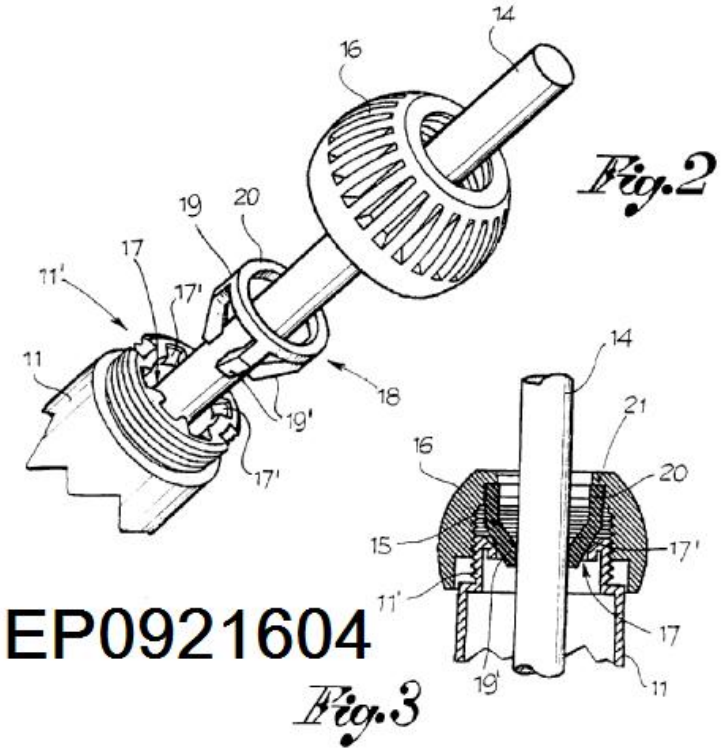

H01R 13/60

Means for supporting coupling part when not engaged

Definition statement

This place covers:

Illustrative example of subject matter classified in H01R 13/60

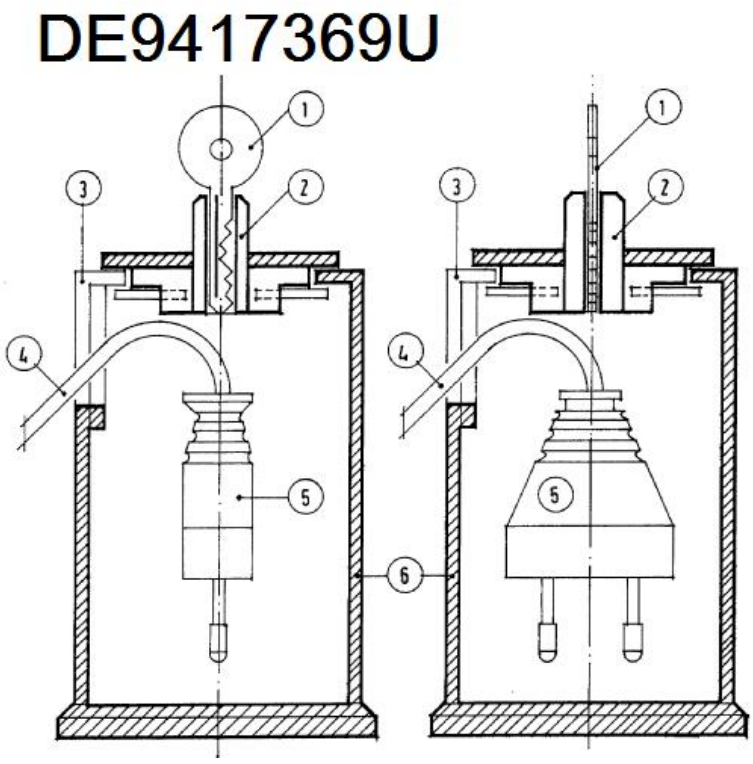

H01R 13/62

Means for facilitating engagement or disengagement of coupling parts or for holding them in engagement

Definition statement

This place covers:

Means provided on coupling devices and specially designed for facilitating engagement or disengagement of coupling parts or for holding them in engagement.

H01R 13/6215

{using one or more bolts}

Definition statement

This place covers:

Illustrative example of subject matter classified in H01R 13/6215

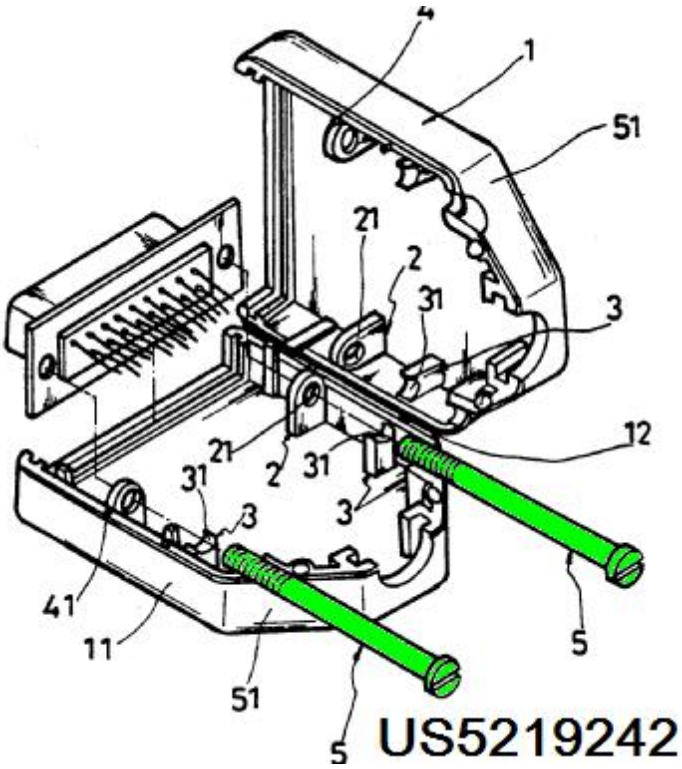

H01R 13/622

Screw-ring or screw-casing (H01R 13/623 takes precedence)

Definition statement

This place covers:

Illustrative example of subject matter classified in H01R 13/622

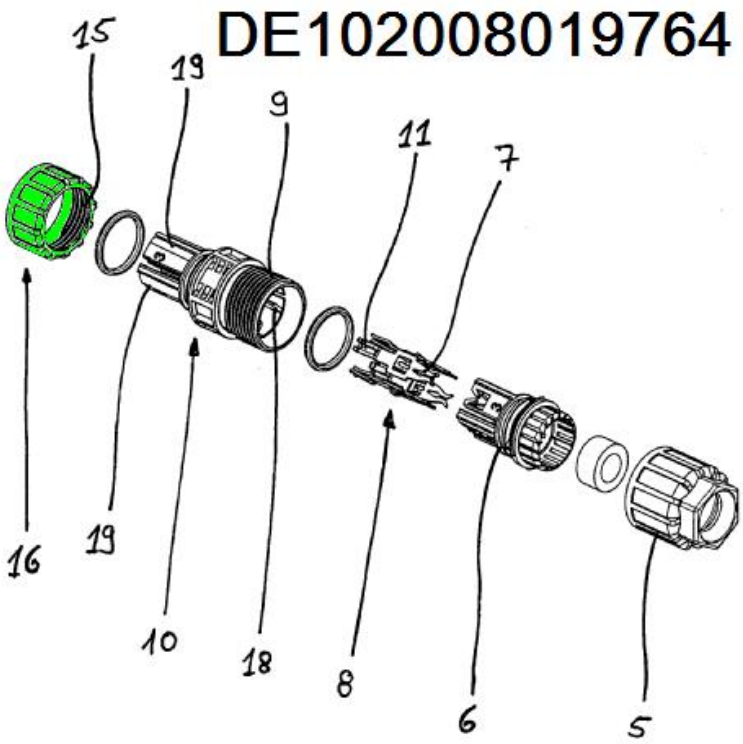

References

Limiting references

This place does not cover:

Casing or ring with helicoidal groove	H01R 13/623

H01R 13/623

Casing or ring with helicoidal groove

Definition statement

This place covers:

Illustrative example of subject matter classified in H01R 13/623

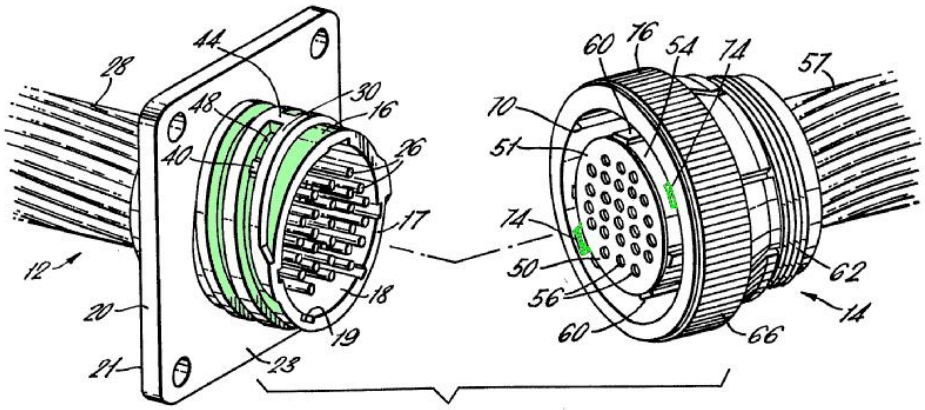

FIG. 1.

FR2166198

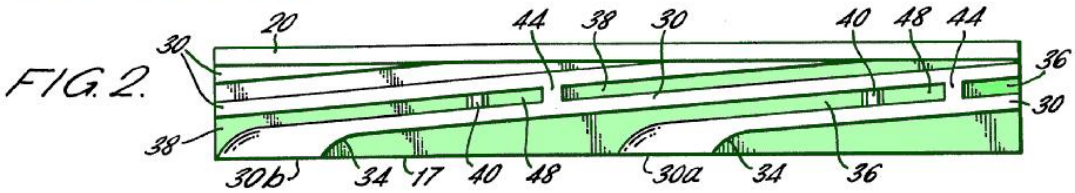

FIG. 2.

H01R 13/625

Casing or ring with bayonet engagement

Definition statement

This place covers:

Illustrative example of subject matter classified in H01R 13/625

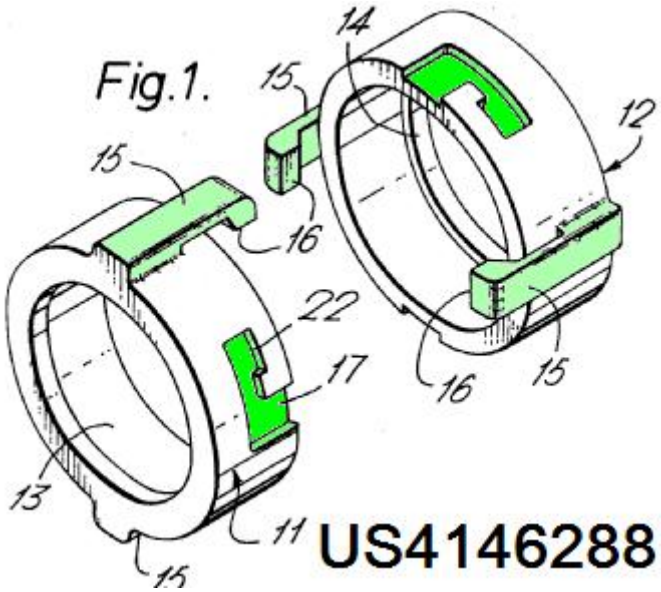

H01R 13/6271

{Latching means integral with the housing (H01R 13/6276, H01R 13/6277, H01R 13/6278 take precedence)}

References

Limiting references

This place does not cover:

Casing or ring with helicoidal groove	H01R 13/6276
Snap or like fastening comprising one or more balls engaging in a hole or a groove	H01R 13/6277
Snap or like fastening comprising a pin snapping into a recess	H01R 13/6278

H01R 13/6275

{Latching arms not integral with the housing (H01R 13/6276, H01R 13/6277, H01R 13/6278 take precedence)}

Definition statement

This place covers:

Illustrative example of subject matter classified in H01R 13/6275

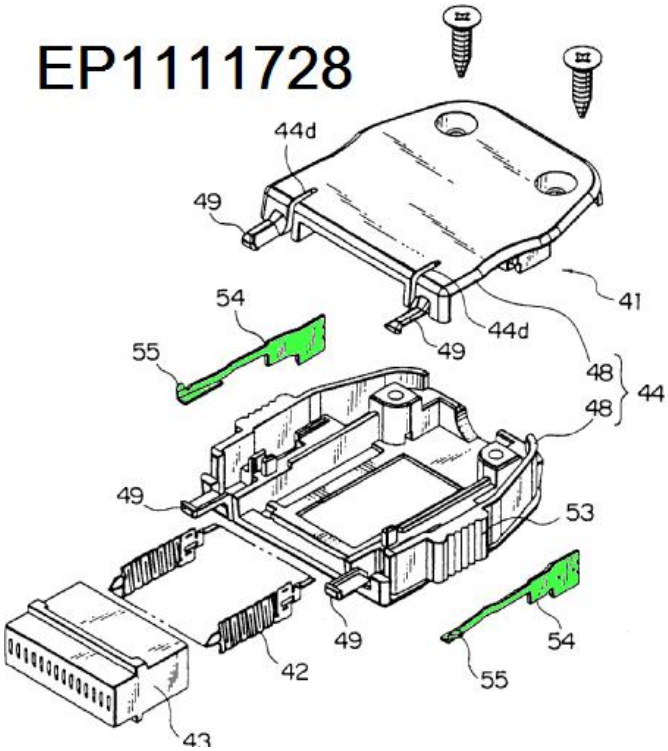

References

Limiting references

This place does not cover:

Casing or ring with helicoidal groove	H01R 13/6276
Snap or like fastening comprising one or more balls engaging in a hole or a groove	H01R 13/6277
Snap or like fastening comprising a pin snapping into a recess	H01R 13/6278

H01R 13/6276

{comprising one or more balls engaging in a hole or a groove}

Definition statement

This place covers:

Illustrative example of subject matter classified in H01R 13/6276

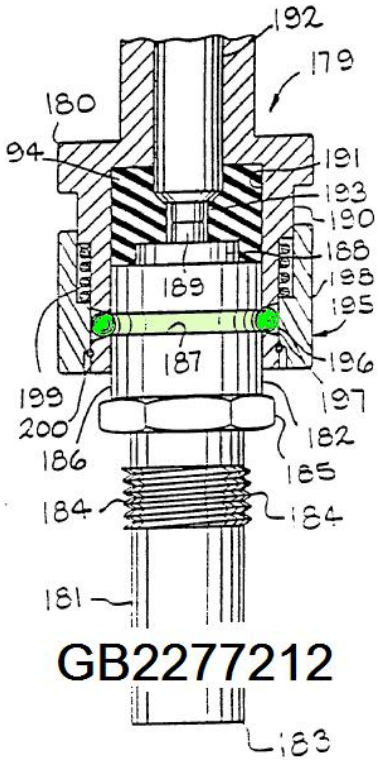

H01R 13/629

Additional means for facilitating engagement or disengagement of coupling parts, e.g. aligning or guiding means, levers, gas pressure {electrical locking indicators, manufacturing tolerances (separate tools or apparatus H01R 43/26)}

References

Limiting references

This place does not cover:

Separate tools or apparatus	H01R 43/26

H01R 13/62905

{comprising a camming member (H01R 13/62933 and H01R 13/641 take precedence)}

References

Limiting references

This place does not cover:

Comprising exclusively pivoting lever	H01R 13/62933
Means for preventing incorrect coupling by indicating incorrect coupling; by indicating correct or full engagement	H01R 13/641

H01R 13/62938

{Pivoting lever comprising own camming means}

Definition statement

This place covers:

Illustrative example of subject matter classified in H01R 13/62938

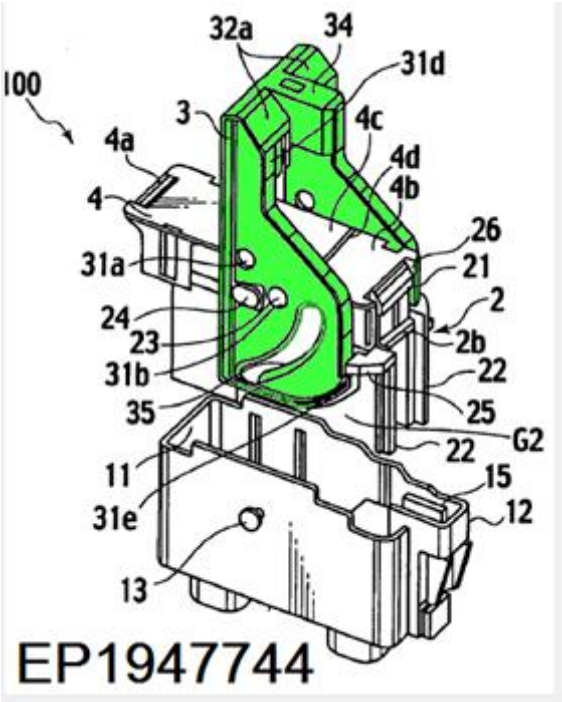

H01R 13/62977

{Pivoting levers actuating linearly camming means}

Definition statement

This place covers:

Illustrative example of subject matter classified in H01R 13/62977

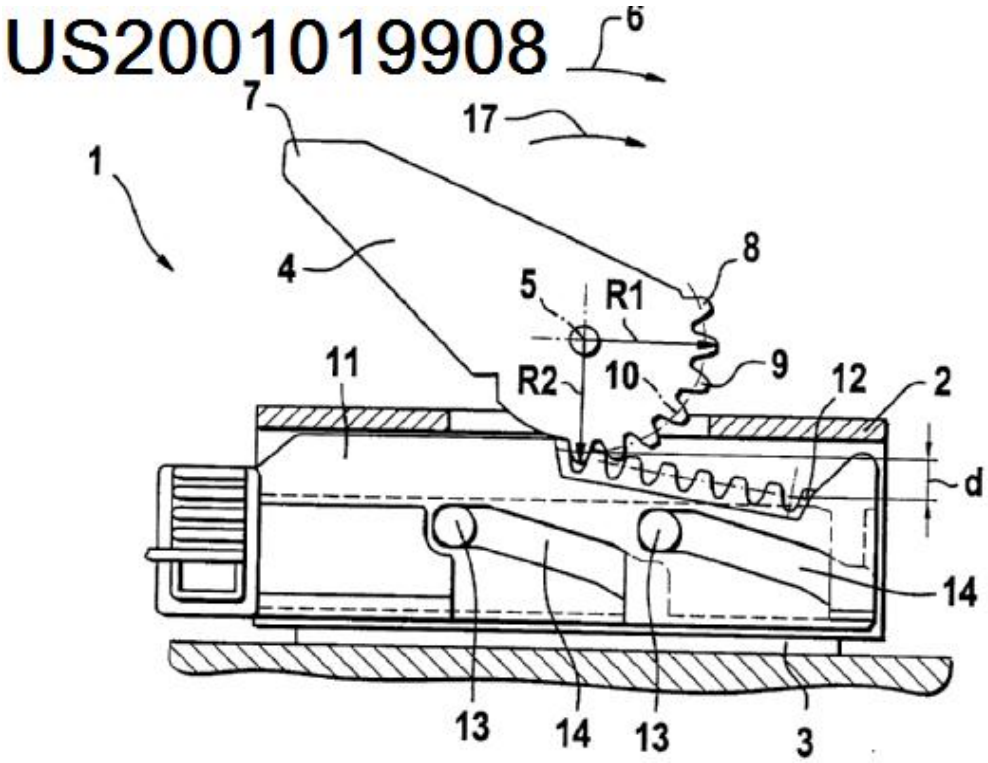

H01R 13/6315

{allowing relative movement between coupling parts, e.g. floating connection (for coupling devices specially adapted for printed circuits, flat or ribbon cables, or like generally planar structures, H01R 12/91 takes precedence)}

Definition statement

This place covers:

Illustrative example of subject matter classified in H01R 13/6315

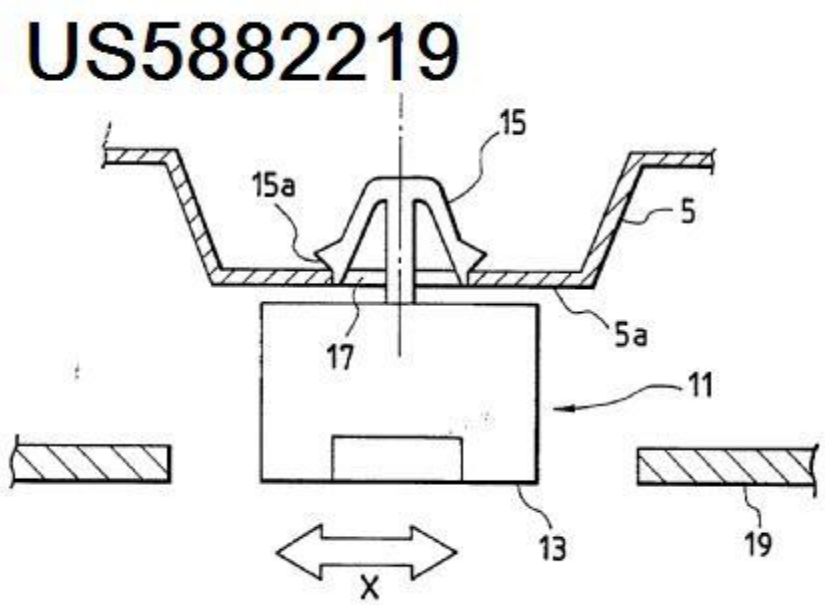

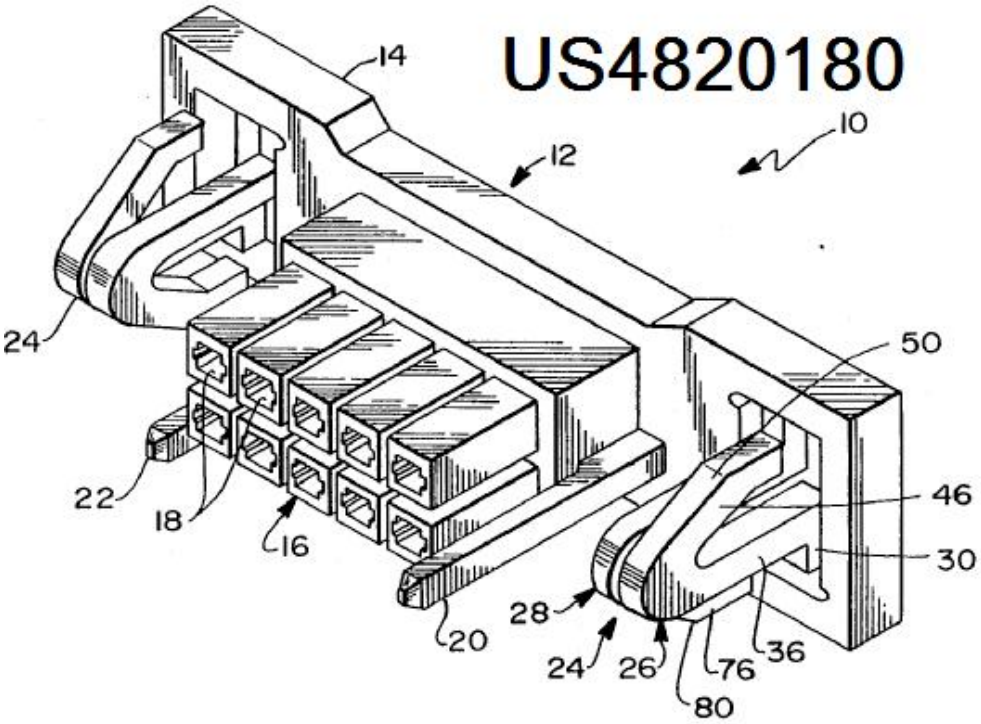

References

Limiting references

This place does not cover:

For coupling devices specially adapted for printed circuits, flat or ribbon cables, or like generally planar structures	H01R 12/91

H01R 13/633

for disengagement only {(in combination with safety switch H01R 13/7132)}

Definition statement

This place covers:

Illustrative example of subject matter classified in H01R 13/633

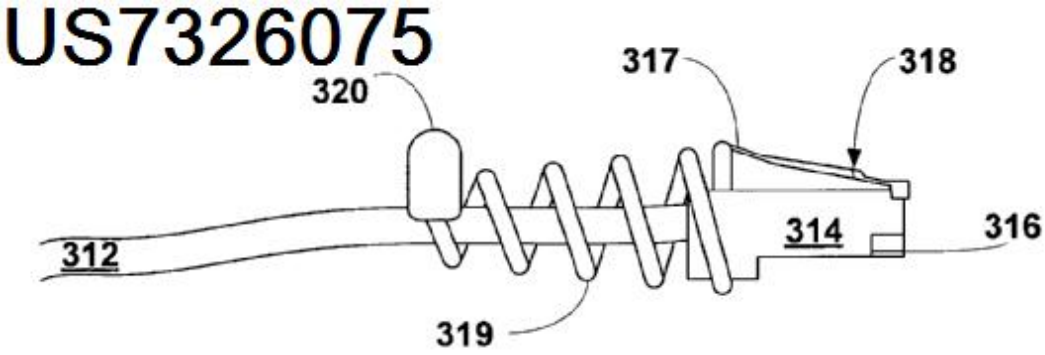

References

Limiting references

This place does not cover:

In combination with safety switch	H01R 13/7132

H01R 13/6335

{comprising a handle}

Definition statement

This place covers:

Illustrative example of subject matter classified in H01R 13/6335

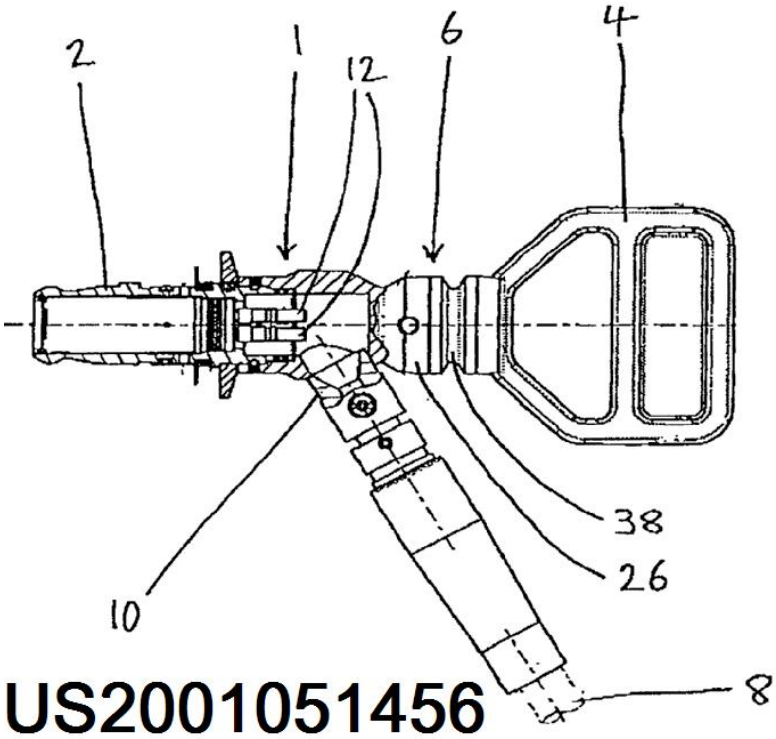

H01R 13/635

by mechanical pressure, e.g. spring force

Definition statement

This place covers:

Illustrative example of subject matter classified in H01R 13/635

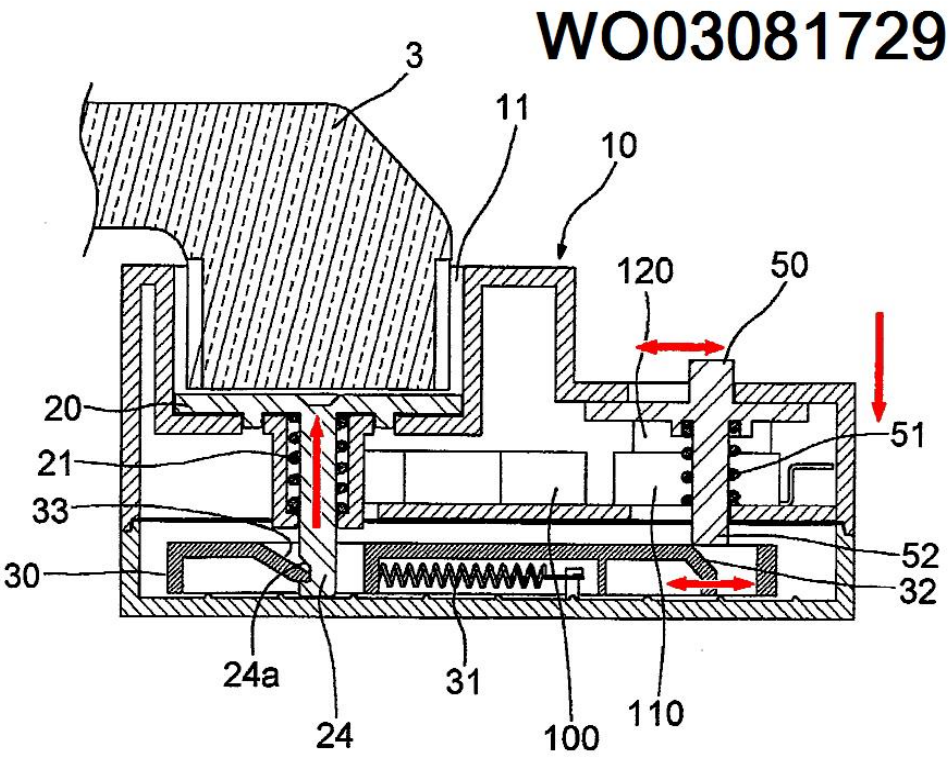

H01R 13/637

by fluid pressure, e.g. explosion

Definition statement

This place covers:

Illustrative example of subject matter classified in H01R 13/637

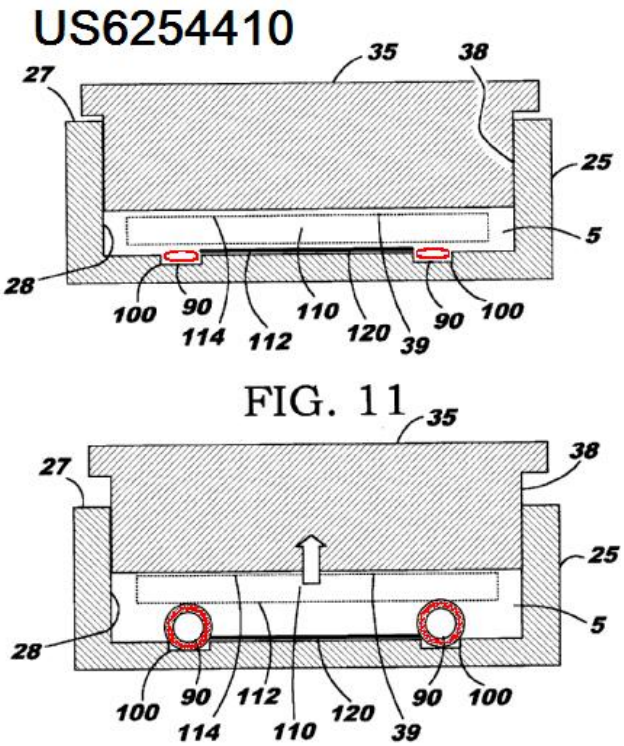

H01R 13/639

Additional means for holding or locking coupling parts together, after engagement, {e.g. separate keylock, retainer strap}

Definition statement

This place covers:

Illustrative example of subject matter classified in H01R 13/639

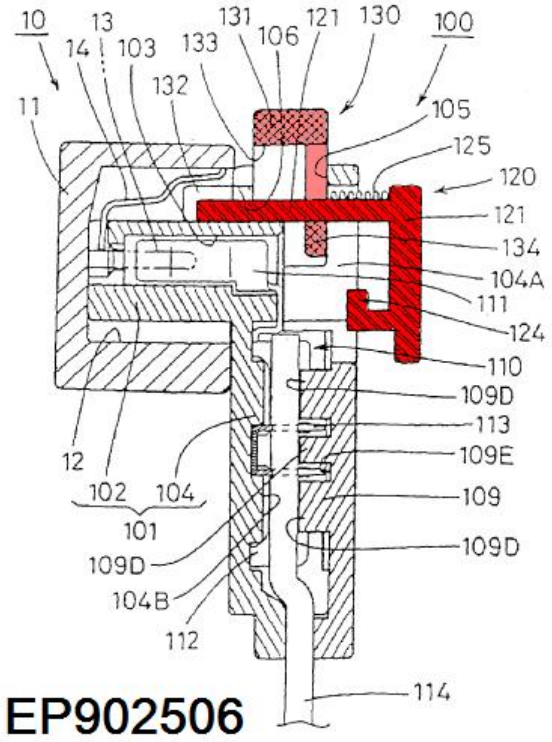

H01R 13/6395

{for wall or panel outlets}

Definition statement

This place covers:

Illustrative example of subject matter classified in H01R 13/6395

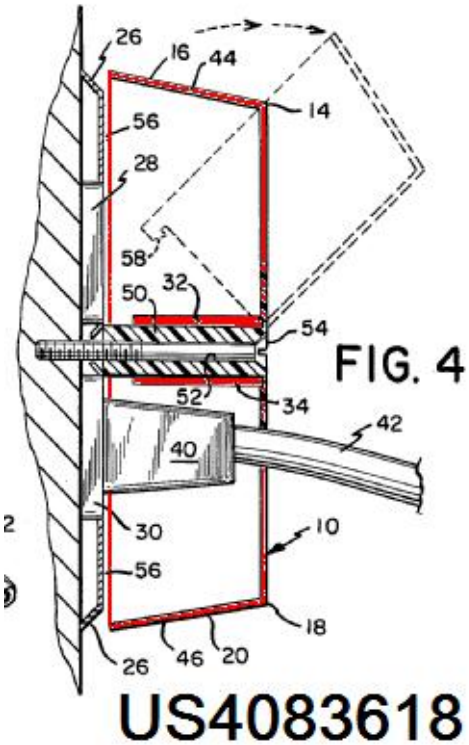

H01R 13/64

Means for preventing incorrect coupling

Definition statement

This place covers:

Specially adapted for: Bases; Cases; Security means

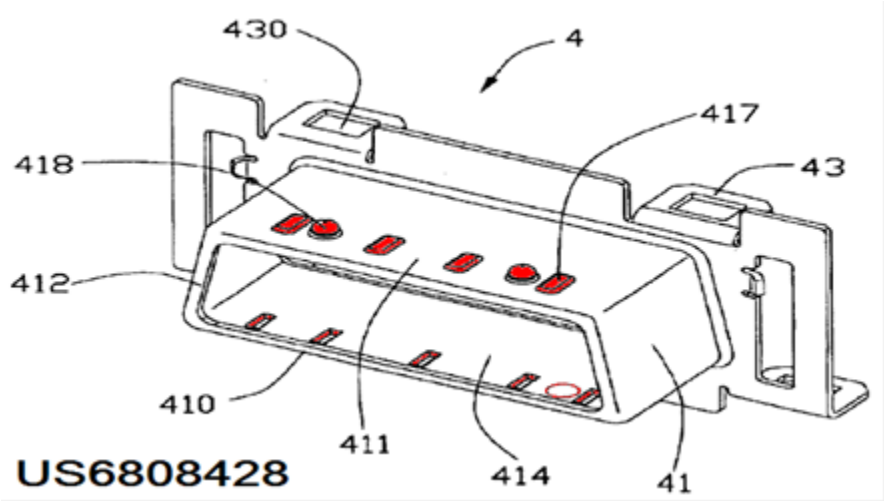

H01R 13/641

by indicating incorrect coupling; by indicating correct or full engagement

Definition statement

This place covers:

Illustrative example of subject matter classified in H01R 13/641

GB2353906

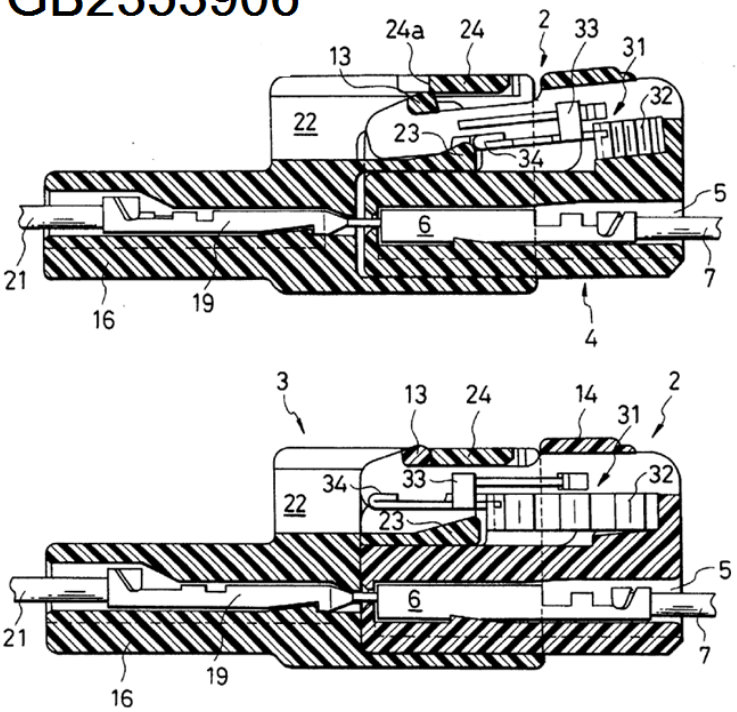

H01R 13/642

by position or shape of contact members

Definition statement

This place covers:

Illustrative example of subject matter classified in H01R 13/642

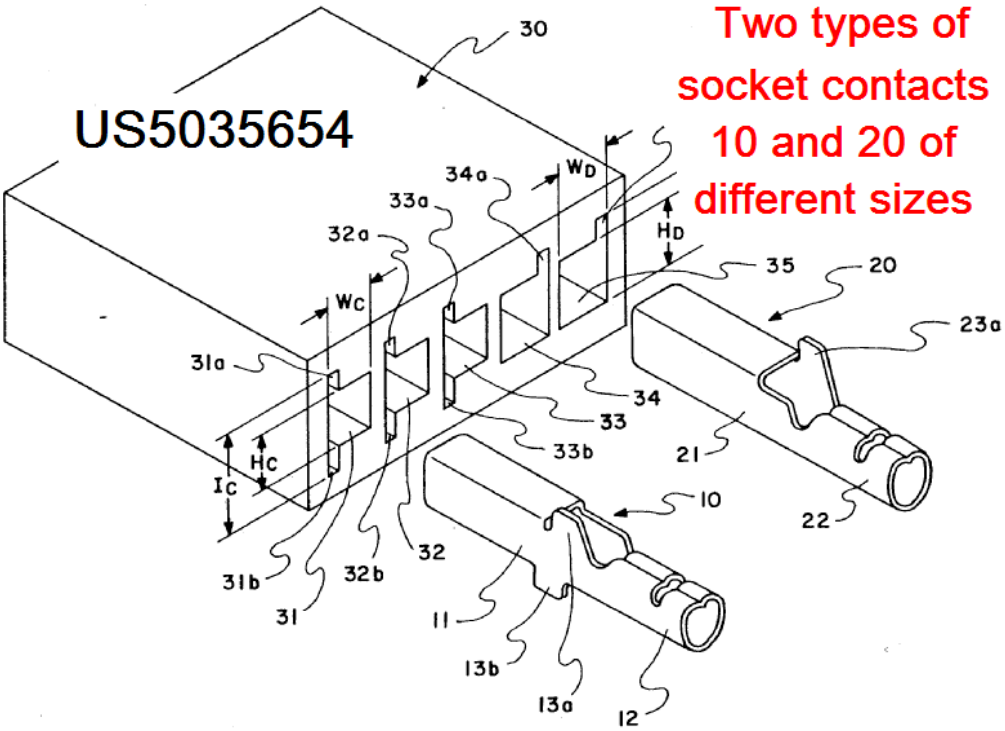

H01R 13/6453

{comprising pin-shaped elements, capable of being orientated in different angular positions around their own longitudinal axes, e.g. pins with hexagonal base}

Definition statement

This place covers:

Illustrative example of subject matter classified in H01R 13/6453

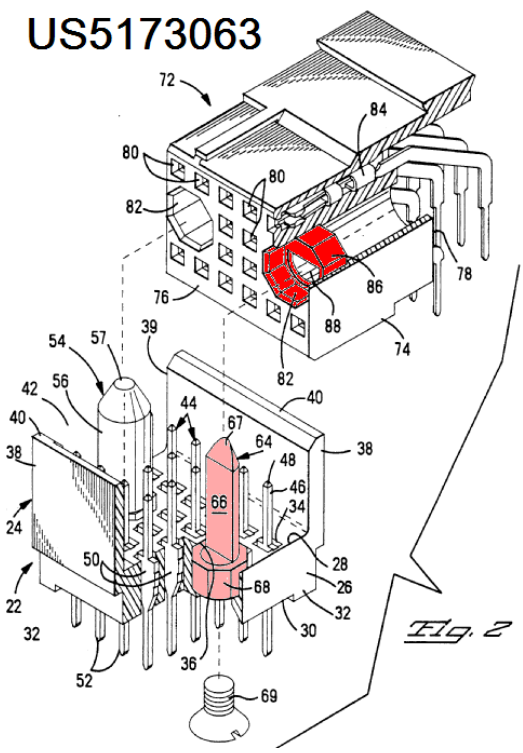

H01R 13/646

Specially adapted for high-frequency, e.g. structures providing an impedance match or phase match (non-coaxed protective earth or shield arrangements H01R 13/648 -H01R 13/6599; coaxed connectors specifically adapted for high frequency H01R 24/40- H01R 24/56)

Definition statement

This place covers:

Coupling devices specially adapted for high-frequency;

Protection, grouding, shielding arrangements.

References

Limiting references

This place does not cover:

Coupling devices having concentrically or coaxially-arranged contacts	H01R 24/38 - H01R 24/56

H01R 13/6463

using twisted pairs of wires

Definition statement

This place covers:

Illustrative example of subject matter classified in H01R 13/6463

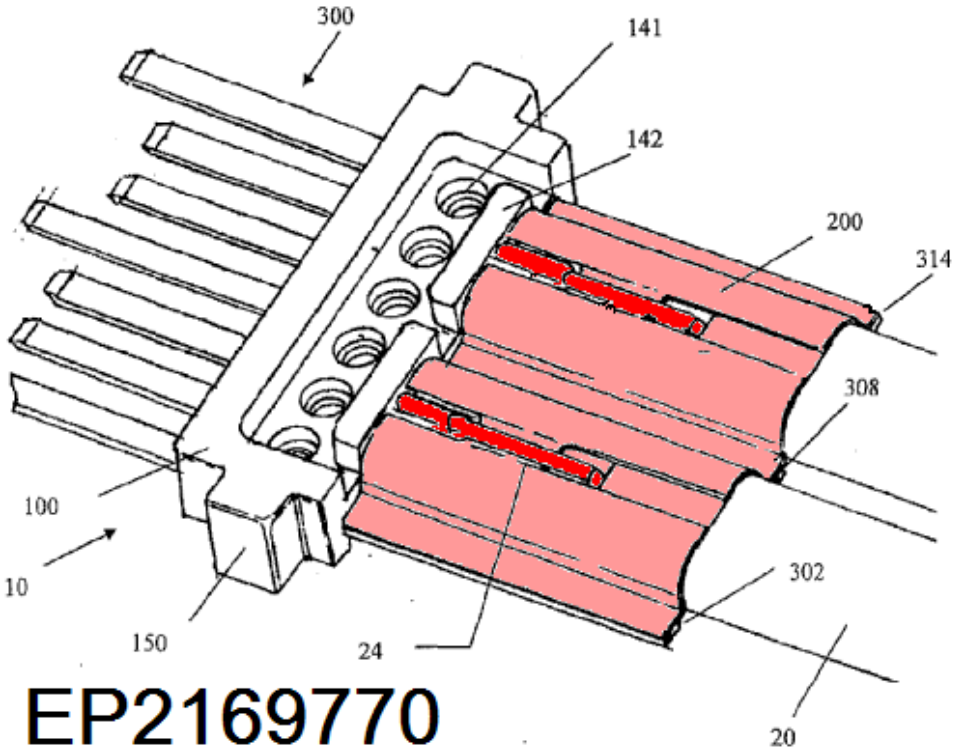

H01R 13/6467

by cross-over of signal conductors

Definition statement

This place covers:

Illustrative example of subject matter classified in H01R 13/6467

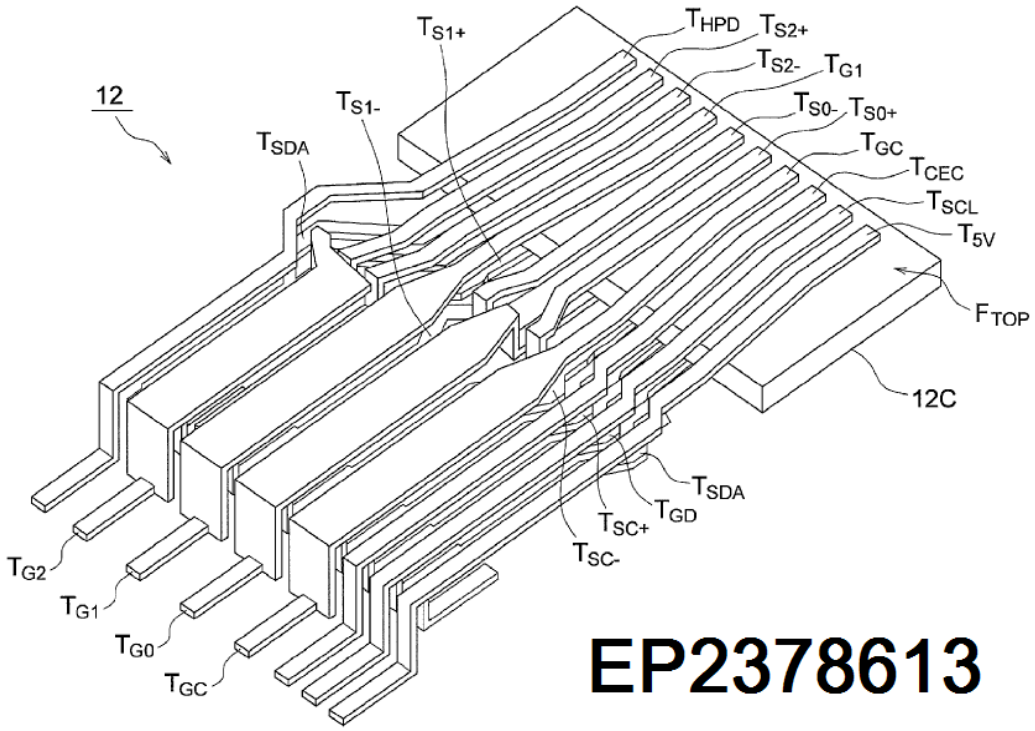

H01R 13/6474

by variation of conductive properties, e.g. by dimension variations

Definition statement

This place covers:

Illustrative example of subject matter classified in H01R 13/6474

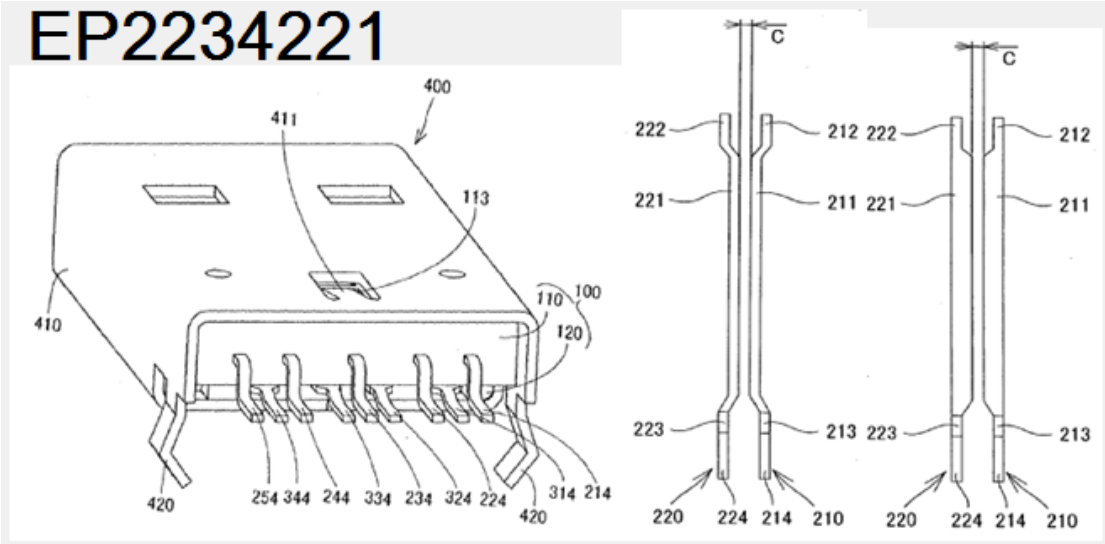

H01R 13/648

Protective earth or shield arrangements on coupling devices (coaxially arranged shields H01R 24/38){, e.g. anti-static shielding}

References

Limiting references

This place does not cover:

Coaxially arranged shields	H01R 24/38

H01R 13/6485

{Electrostatic discharge protection (in general H05F 1/00, for electric apparatus H05K 9/0067)}

Definition statement

This place covers:

Illustrative example of subject matter classified in H01R 13/6485

US2006014433

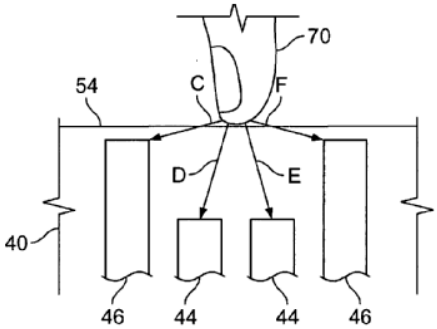

FIG. 3

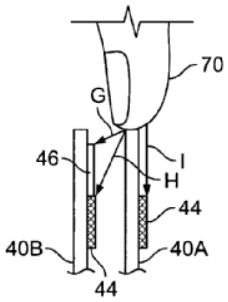

FIG. 4

References

Limiting references

This place does not cover:

Electrostatic discharge protection in general	H05F 1/00
For electric apparatus	H05K 9/0067

H01R 13/652

with earth pin, blade or socket

Definition statement

This place covers:

Illustrative example of subject matter classified in H01R 13/652

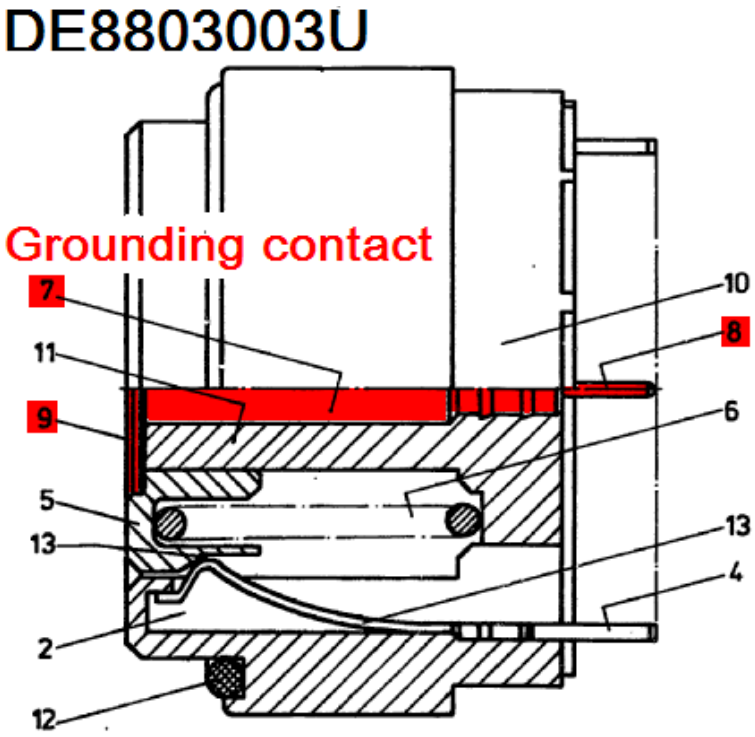

H01R 13/655

with earth brace

Definition statement

This place covers:

Illustrative example of subject matter classified in H01R 13/655

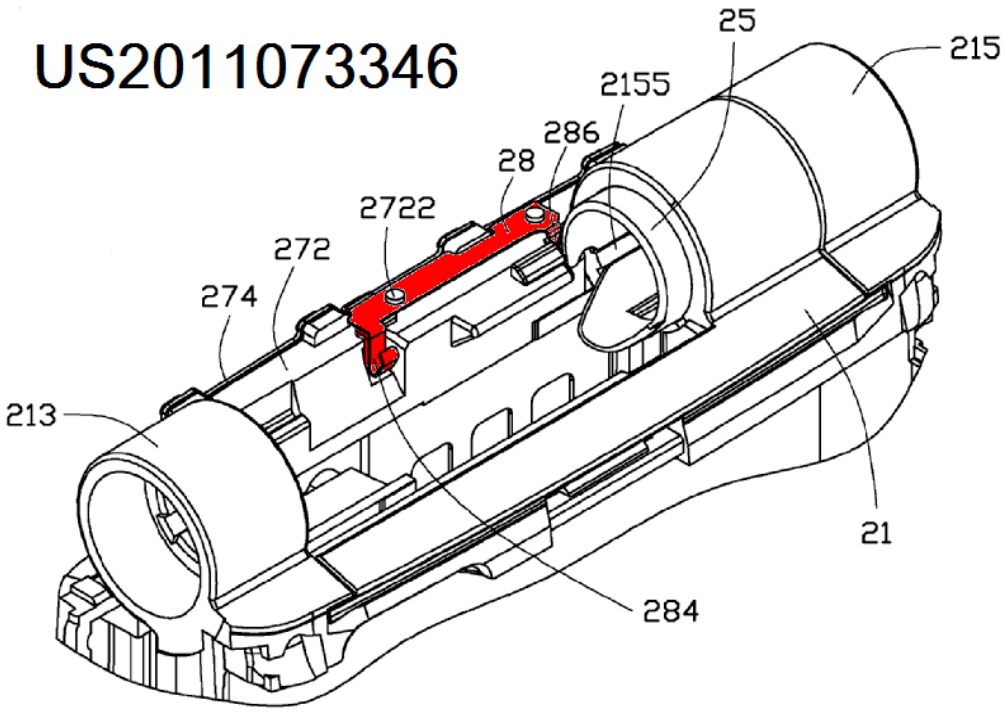

H01R 13/658

High frequency shielding arrangements, e.g. against EMI [Electro-Magnetic Interference] or EMP [Electro-Magnetic Pulse] {(coaxial coupling devices specially adapted for high frequency H01R 24/40; for flat or ribbon cable connectors H01R 12/774; for coaxial cable H01R 9/05)}

Definition statement

This place covers:

Subject matter under group H01R 13/648 comprising a conductive means for preventing or reducing (a) detrimental effects induced within a connector or contact due to capacitive or inductive coupling with electric or magnetic fields generated from a source outside of the connector or contact, (b) induced electrical interference or signal loss due to capacitive or inductive coupling between mutually insulated contacts within a plural-contact connector, (i.e. reducing cross-talk), or (c) undesirable loss of electrical information or signal due to electrical radiation of signal from connector or contact.

References

Limiting references

This place does not cover:

For coaxial cable	H01R 9/05

For flat or ribbon cable connectors	H01R 12/774;
Coaxial coupling devices specially adapted for high frequency	H01R 24/40

H01R 13/6581

Shield structure

Definition statement

This place covers:

Subject matter under group H01R 13/658 comprising details of the shape or construction of a shield.

H01R 13/6582

with resilient means for engaging mating connector

Definition statement

This place covers:

Subject matter under group H01R 13/6581

comprising shielding arrangements including

a resilient means on one connector for engaging a mating connector.

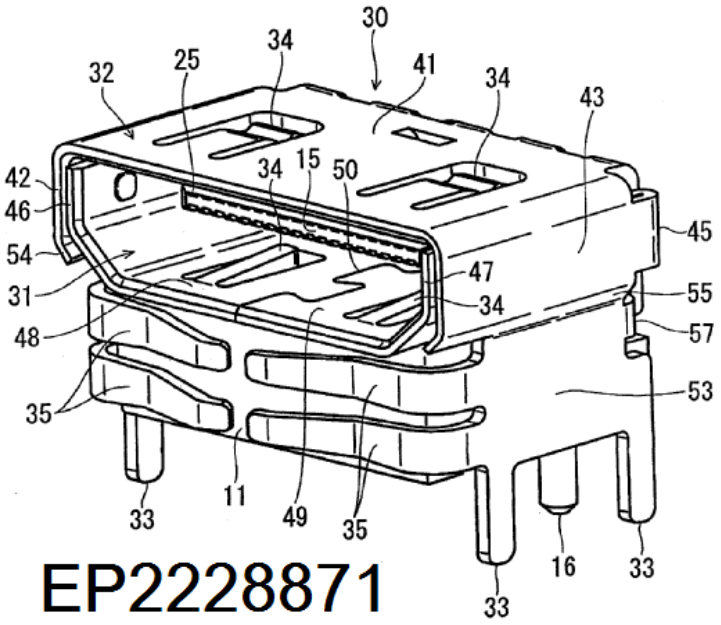

H01R 13/6583

with separate conductive resilient members between mating shield members

Definition statement

This place covers:

Subject matter under group H01R 13/6582 including

additional resilient means for electrically connecting

the shields of two mating connectors.

Examples:

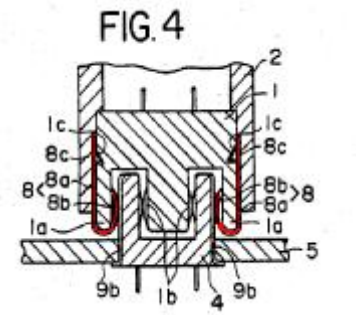

US4544227

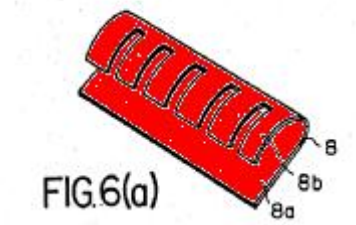

US4808126

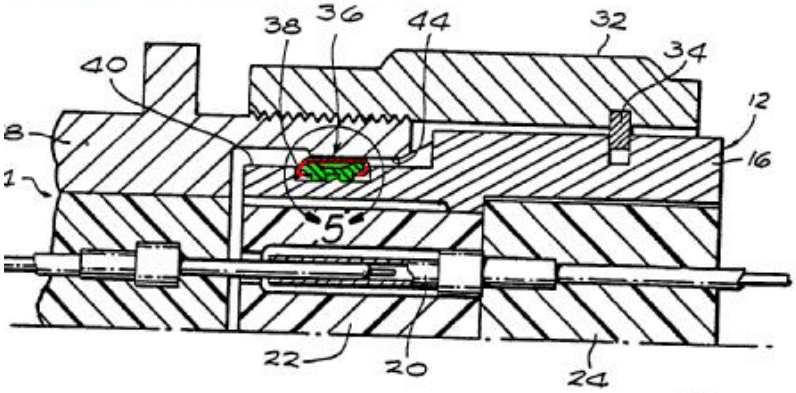

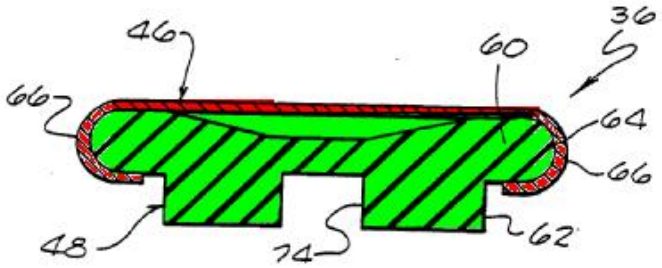

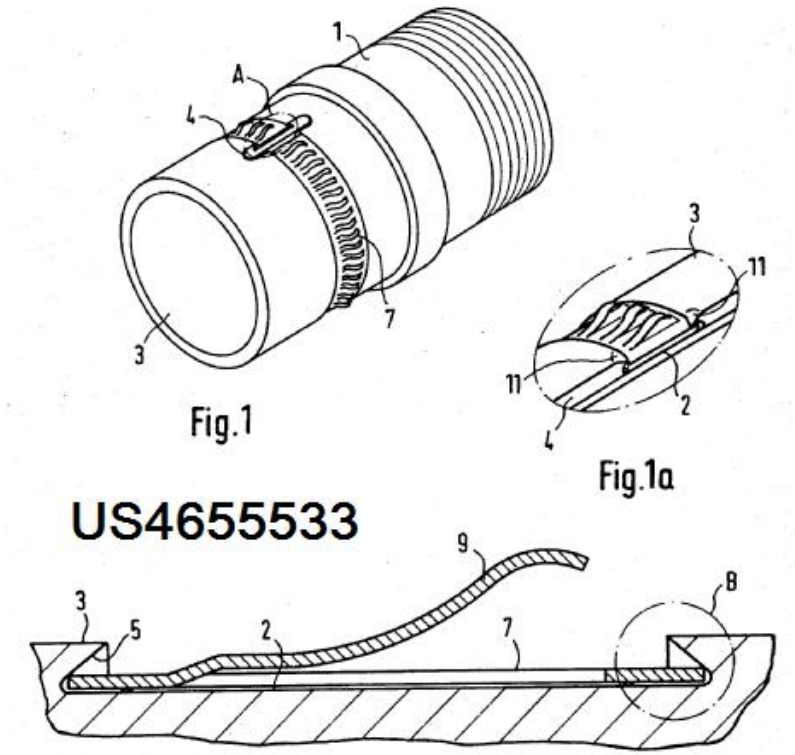

H01R 13/6584

formed by conductive elastomeric members, e.g. flat gaskets or O-rings

Definition statement

This place covers:

Subject matter under group H01R 13/6583 wherein

the separate resilient means comprises a

conductive material having elastic properties.

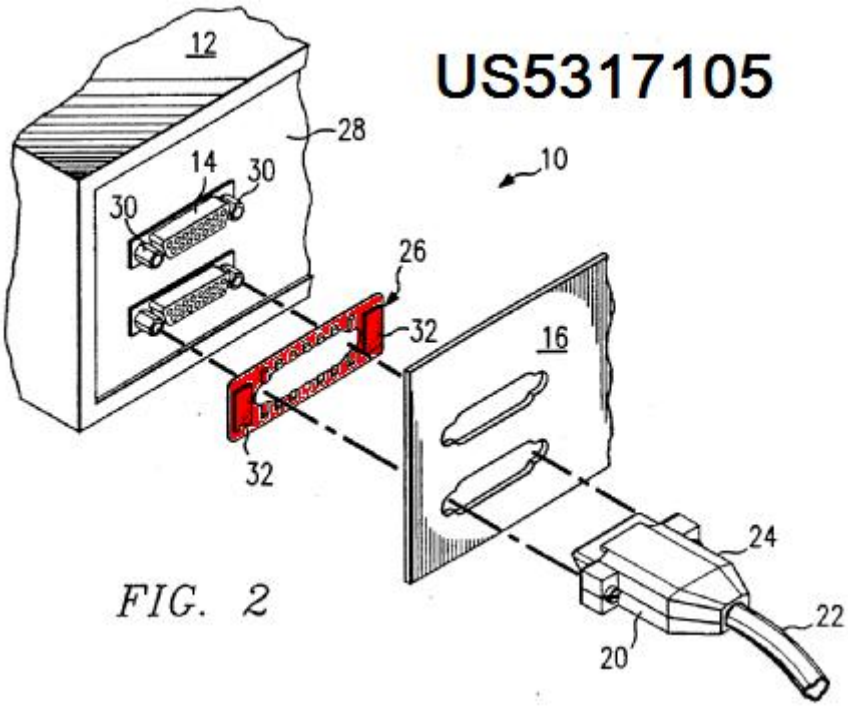

FIG. 2

Examples:

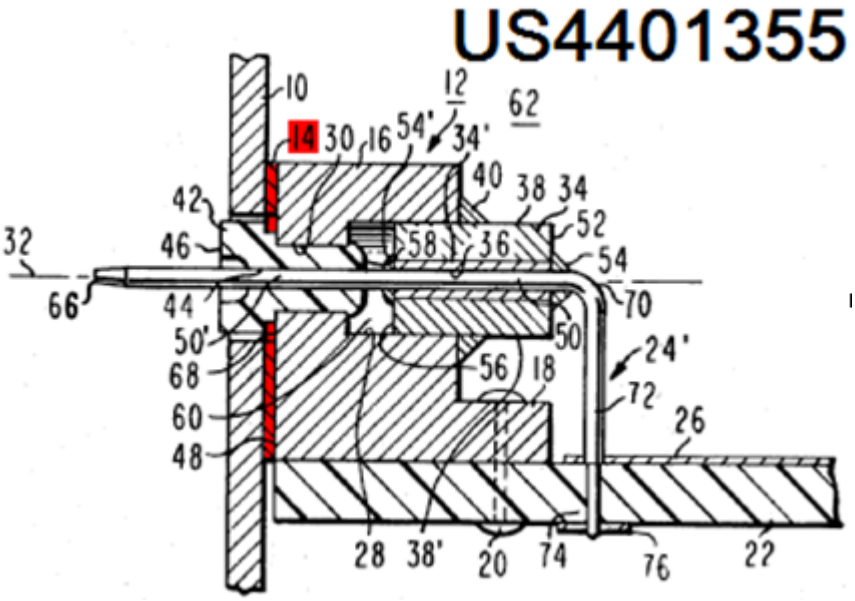

H01R 13/6585

Shielding material individually surrounding or interposed between mutually spaced contacts

Definition statement

This place covers:

Subject matter under group H01R 13/6581 comprising conductive material either (a) formed around but spaced apart from at least a portion of at least one contact, so that the contact is inductively

shielded from one or more other contacts, or (b) interposed between two or more contacts, so that the contacts are inductively shielded from one another. Examples:

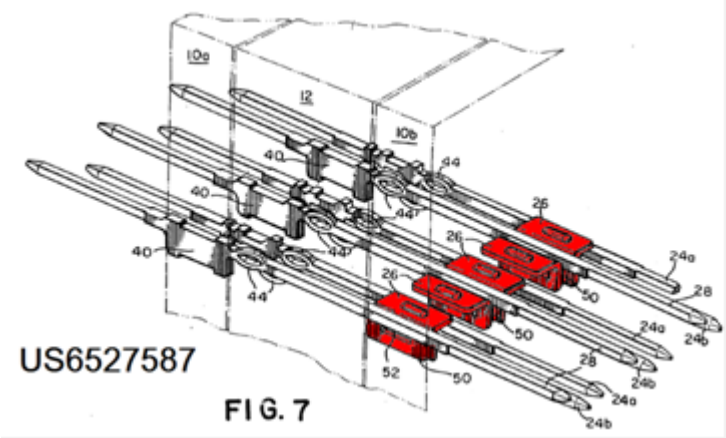

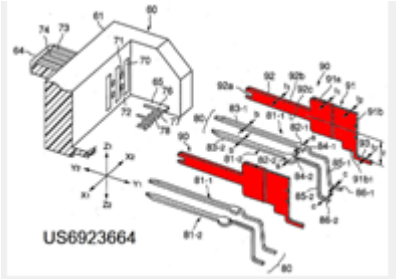

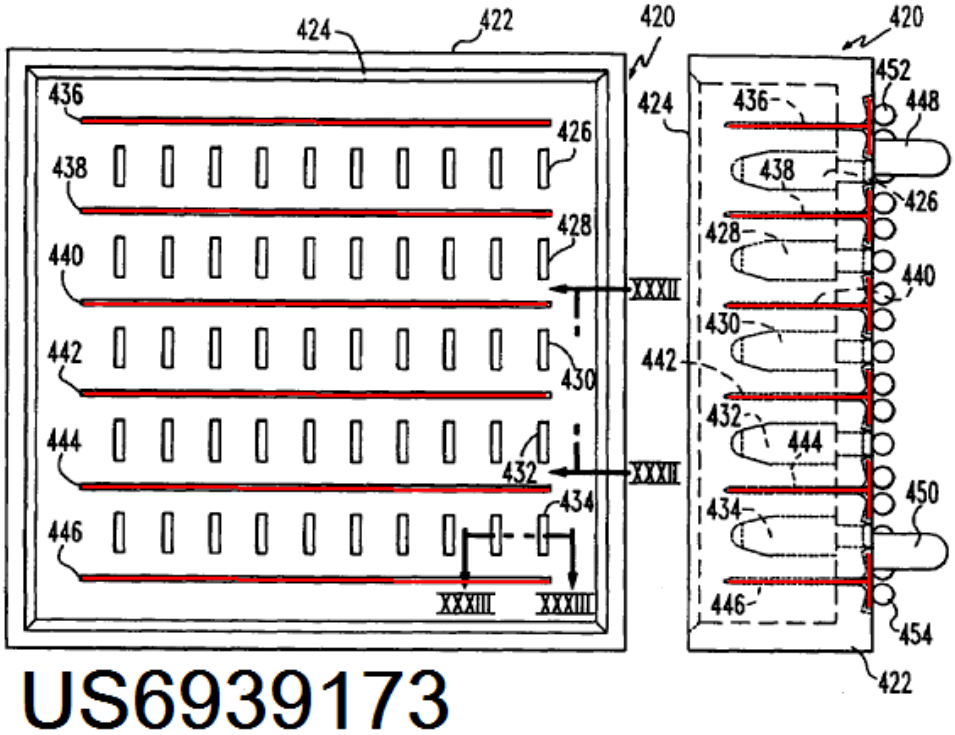

H01R 13/6586

for separating multiple connector modules

Definition statement

This place covers:

Subject matter under group H01R 13/6585 wherein the shielding material separates two or more assemblies of plural contacts.

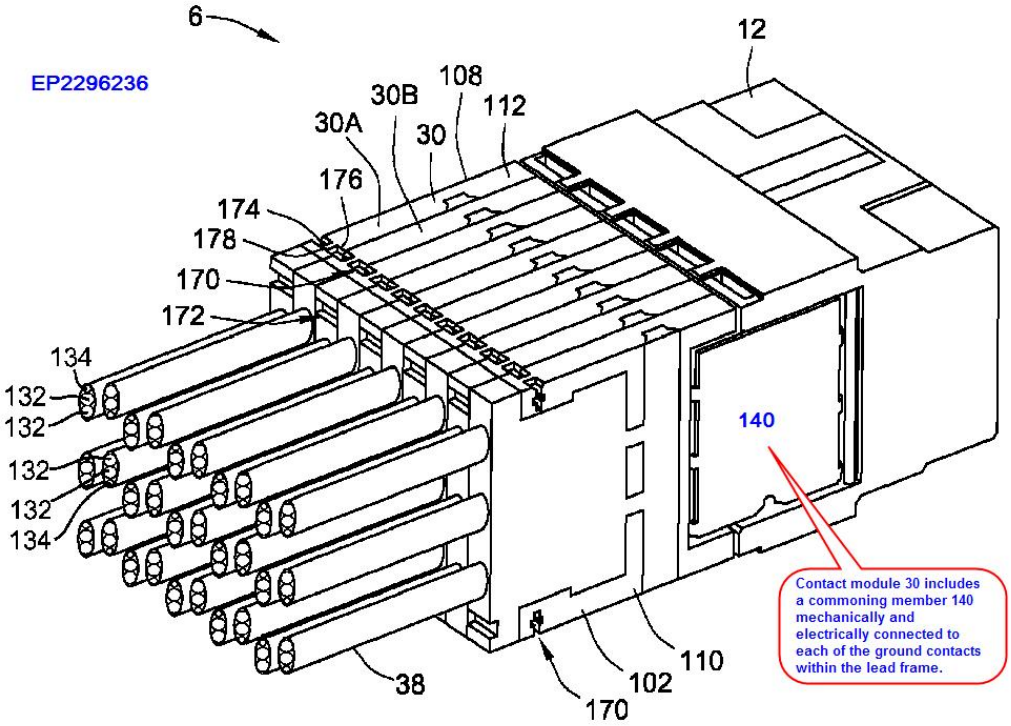

H01R 13/6587

for mounting on PCBs

Definition statement

This place covers:

Subject matter under group H01R 13/6586 wherein the shield has means to facilitate mounting on a printed circuit board.

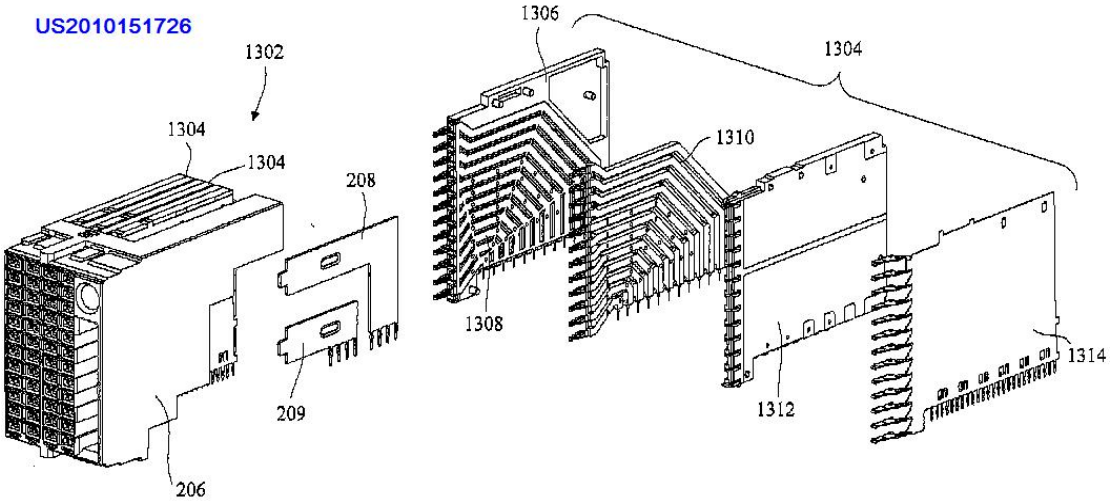

H01R 13/6588

with through openings for individual contacts

Definition statement

This place covers:

Subject matter under group H01R 13/6585 wherein the shield has apertures corresponding to individual contacts.

(Example: US 4070084)

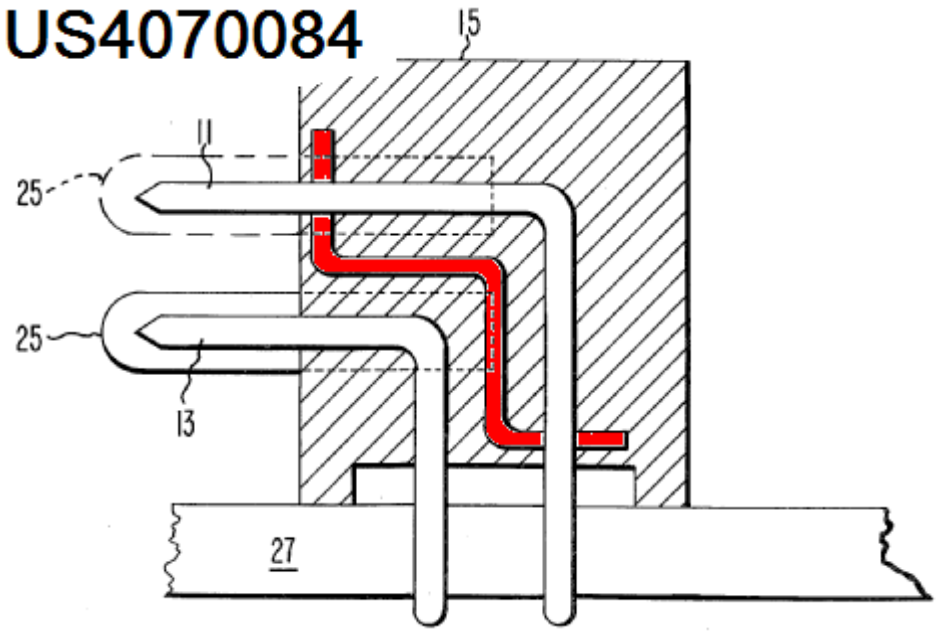

H01R 13/6589

with wires separated by conductive housing parts

Definition statement

This place covers:

Subject matter under group H01R 13/6585 wherein the shield includes a conductive wall portion that separates enclosed wires. Examples:

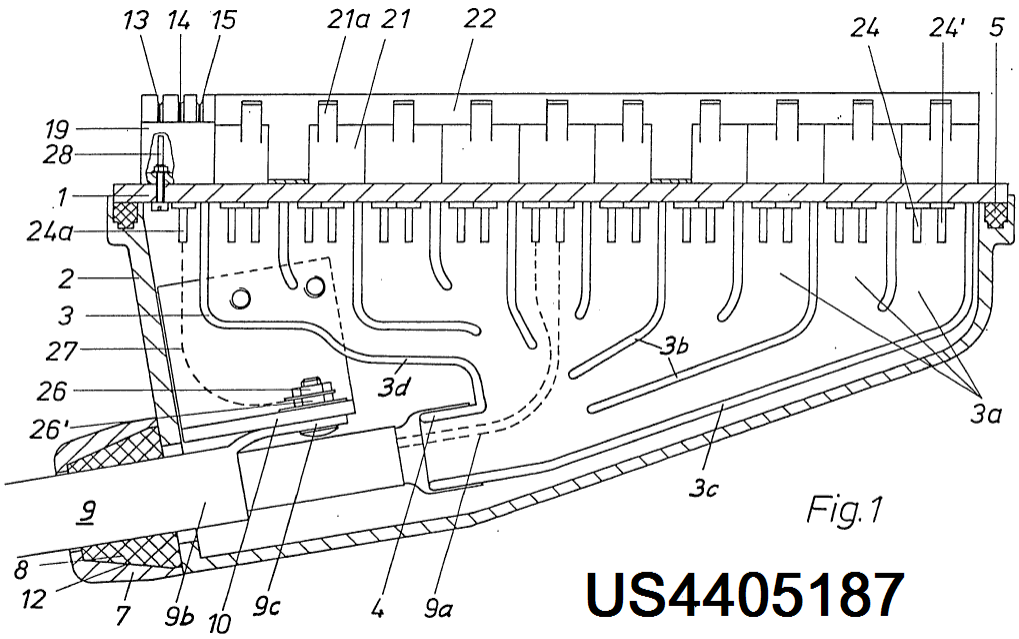

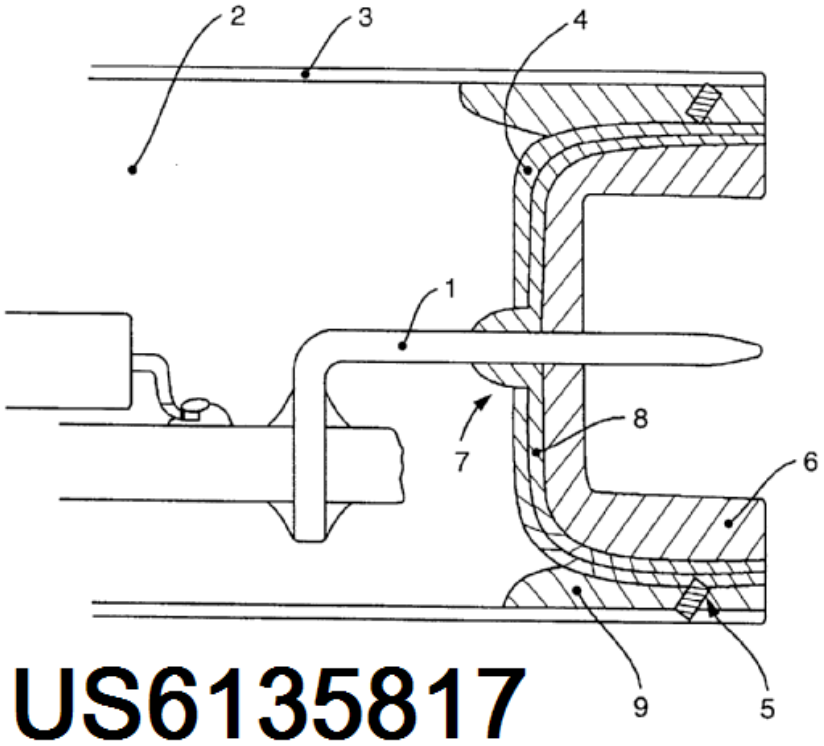

H01R 13/659

with plural ports for distinct connectors

Definition statement

This place covers:

Subject matter under group H01R 13/6581 wherein the shield encloses two or more connectors.
Examples:

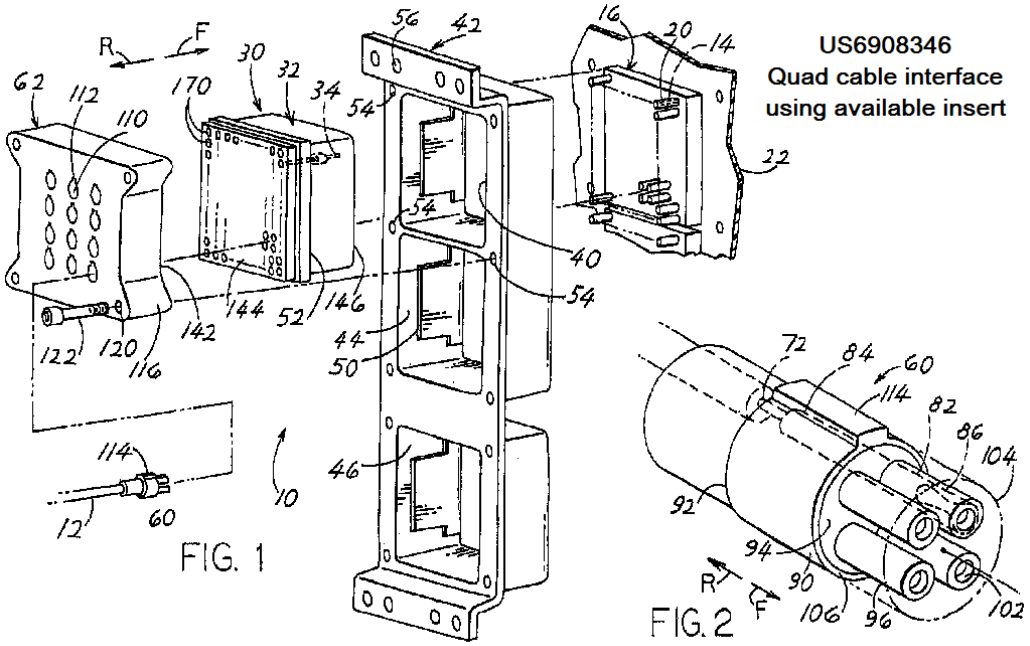

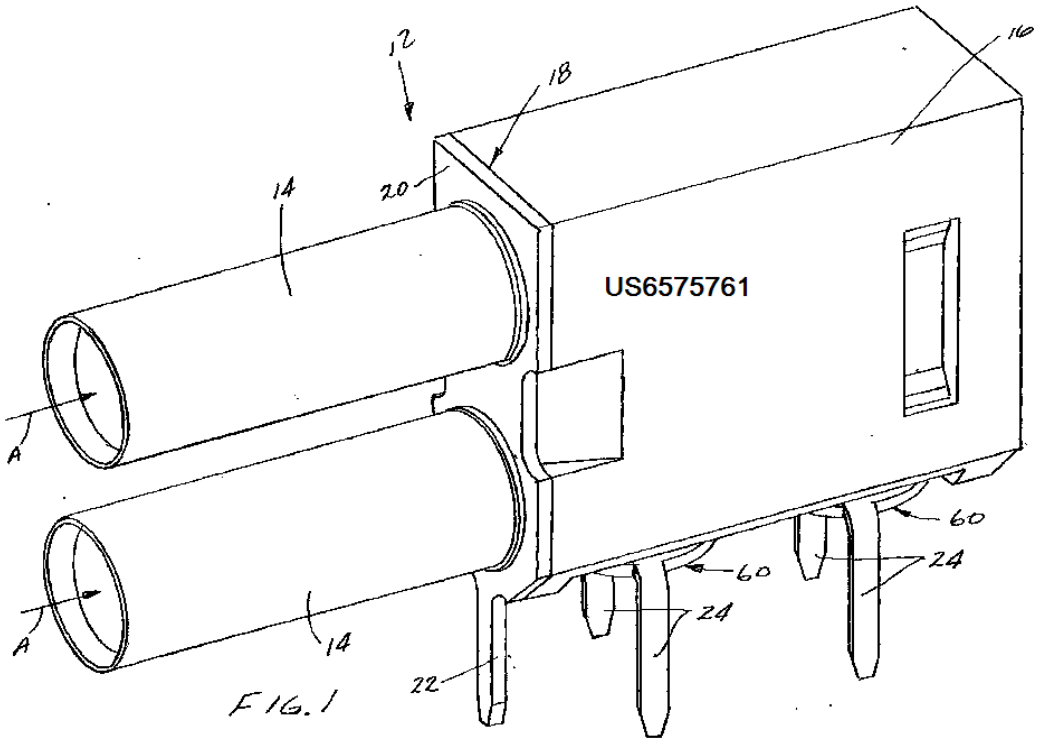

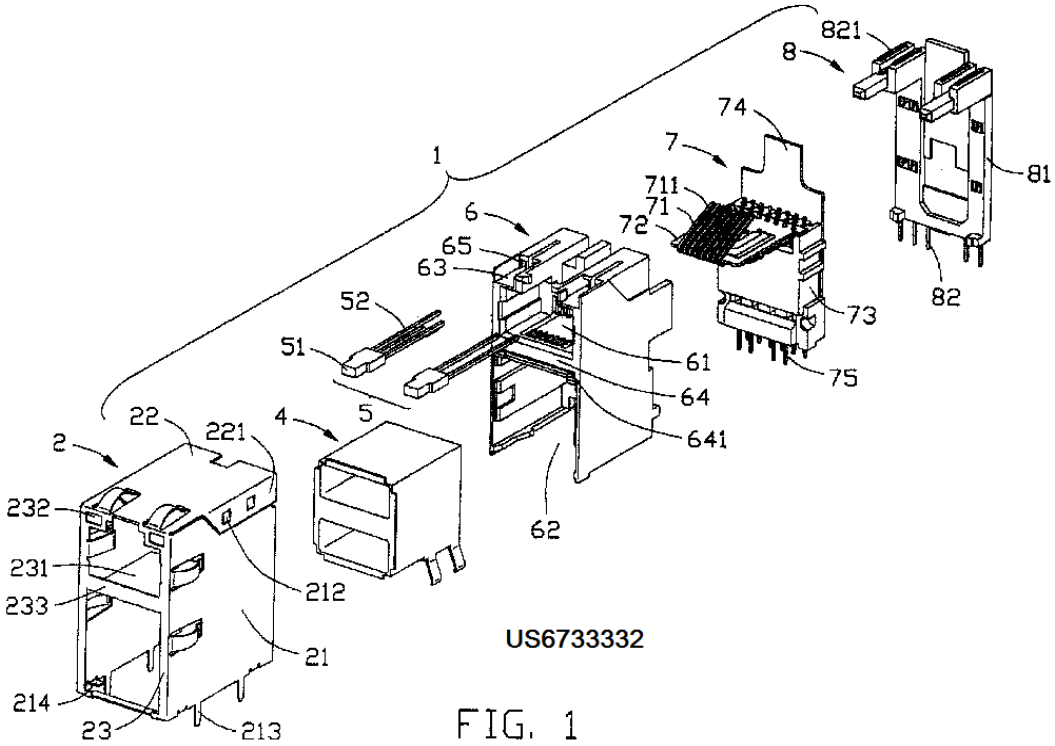

US6733332

FIG. 1

US6722924

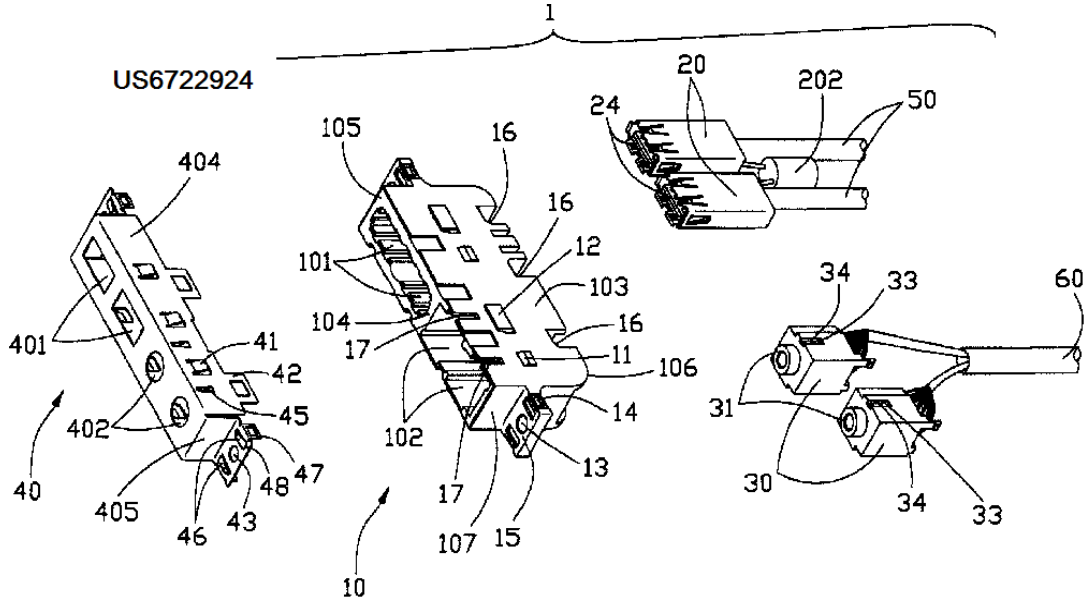

H01R 13/6591

Specific features or arrangements of connection of shield to conductive members

Definition statement

This place covers:

Subject matter under group H01R 13/658 including specific features of a connection between the conductive shield and a conductive member of the connector or another component.

H01R 13/6592

the conductive member being a shielded cable

Definition statement

This place covers:

Subject matter under group H01R 13/6591 wherein the connection is to an external conductive sheath of an electric cable.

H01R 13/6593

the shield being composed of different pieces

Definition statement

This place covers:

Subject matter under group H01R 13/6592 wherein the shield is comprised of assembled parts.

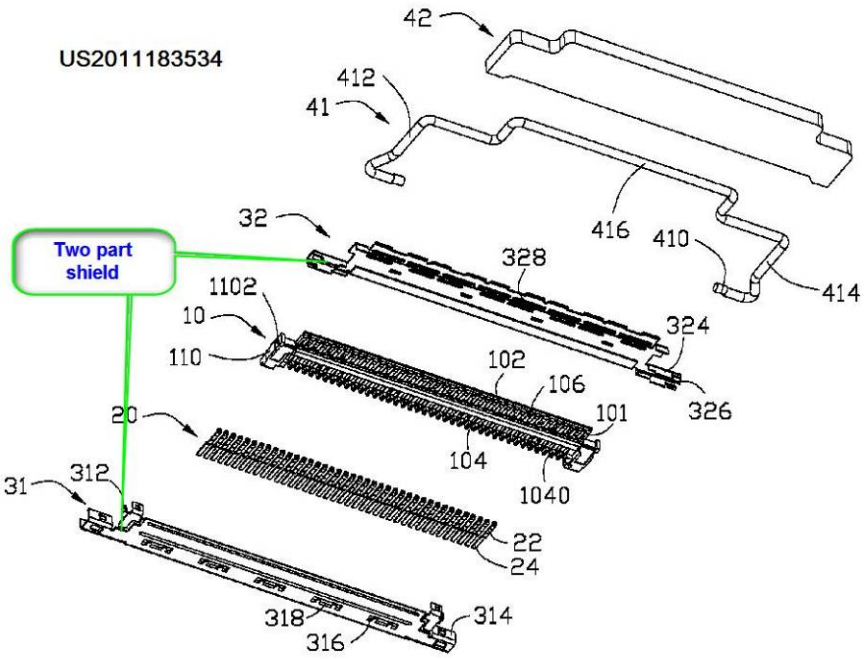

FIG. 3

H01R 13/6594

the shield being mounted on a PCB and connected to conductive members

Definition statement

This place covers:

Subject matter under group H01R 13/6591 wherein the shield is mounted on a printed circuit board and is electrically connected to a conductor on the circuit board.

H01R 13/6595

with separate members fixing the shield to the PCB

Definition statement

This place covers:

Subject matter under group H01R 13/6594 wherein the shield is attached to the printed circuit board by a separate element or member. Examples:

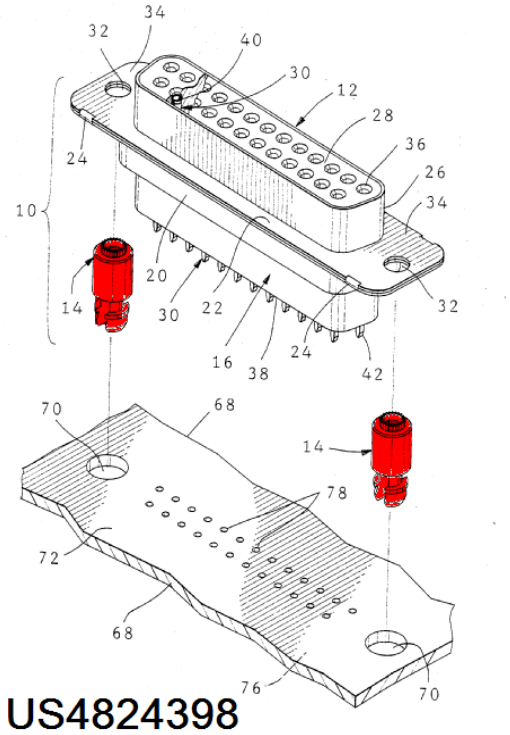

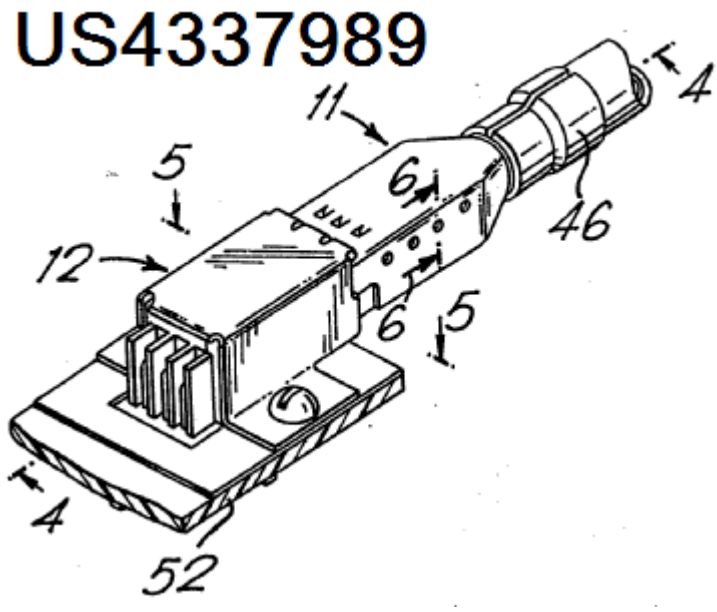

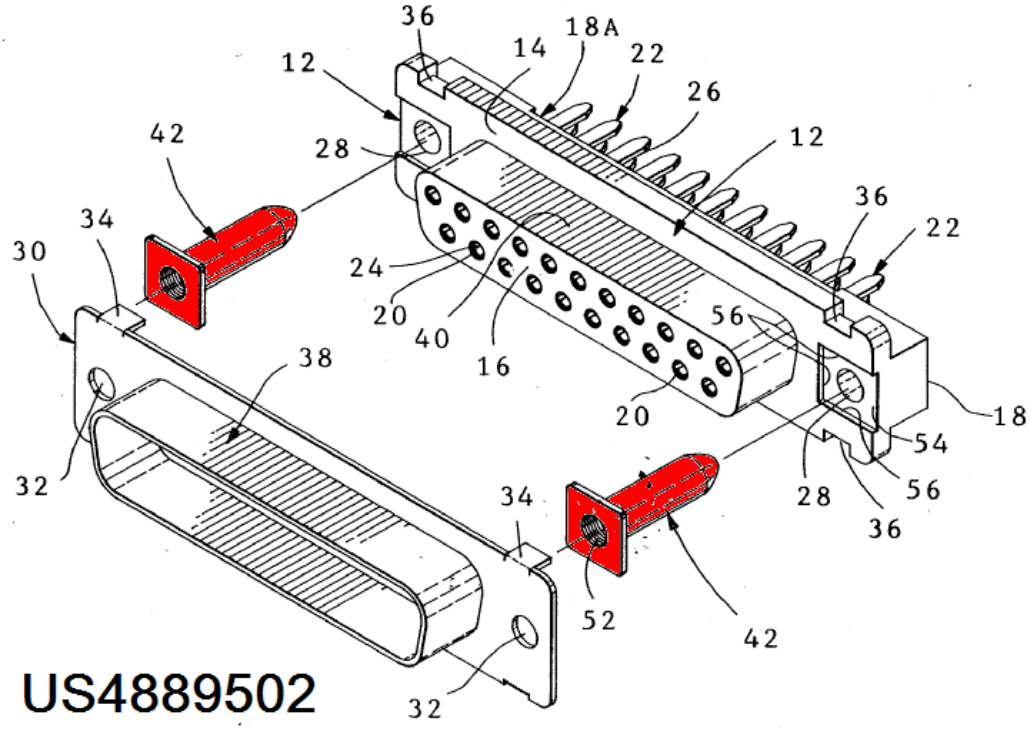

H01R 13/6596

the conductive member being a metal grounding panel

Definition statement

This place covers:

Subject matter under group H01R 13/6591 including specific features of a connection between the conductive shield and an electrically grounded metal panel. Examples:

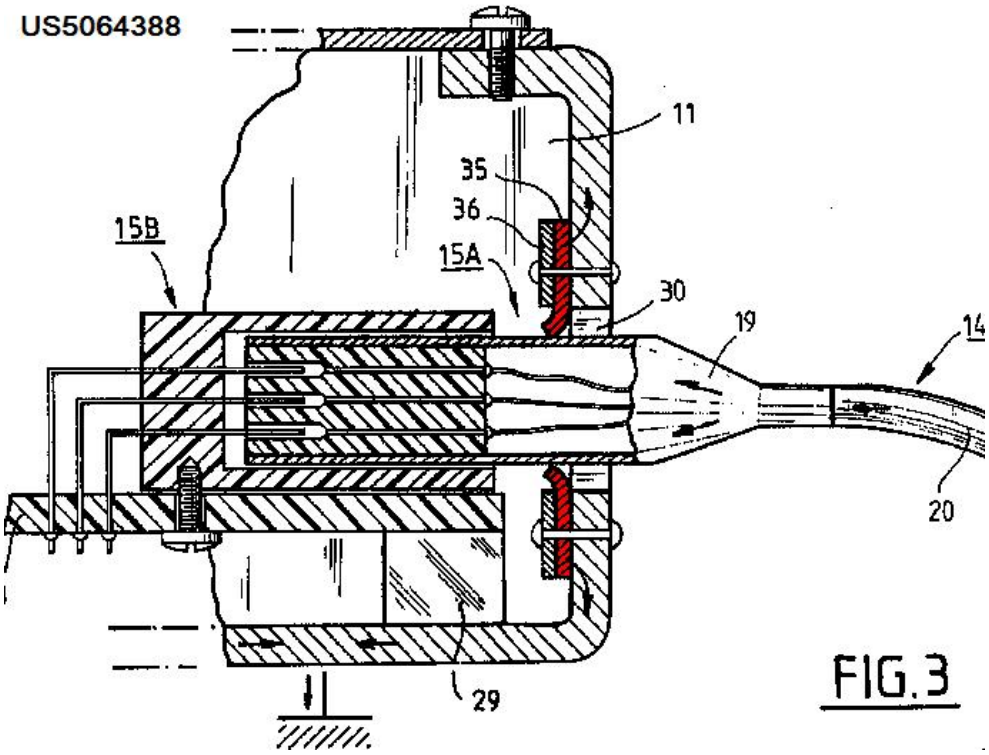

US3366918

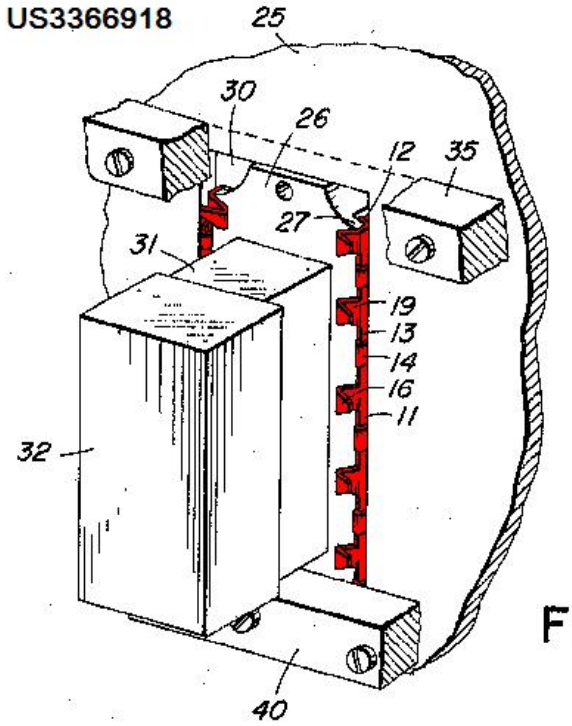

FIG 4

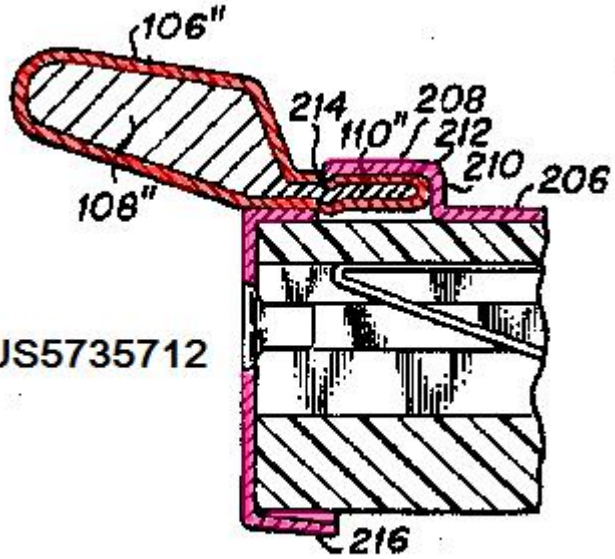

US5735712

Fig_10

H01R 13/6597

the conductive member being a contact of the connector

Definition statement

This place covers:

Subject matter under group H01R 13/6591 including specific features of a connection between the conductive shield and a contact of the connector. Examples:

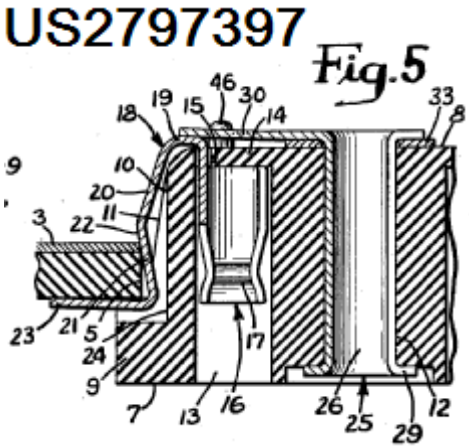

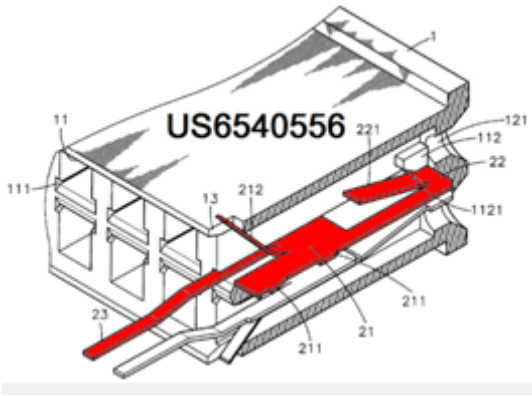

H01R 13/6598

Shield material

Definition statement

This place covers:

Subject matter under group H01R 13/658 comprising the composition or properties of the shielding material.

H01R 13/6599

Dielectric material made conductive, e.g. plastic material coated with metal

Definition statement

This place covers:

Subject matter under group H01R 13/6598 comprising a dielectric material having conductive additives or coatings. Example:

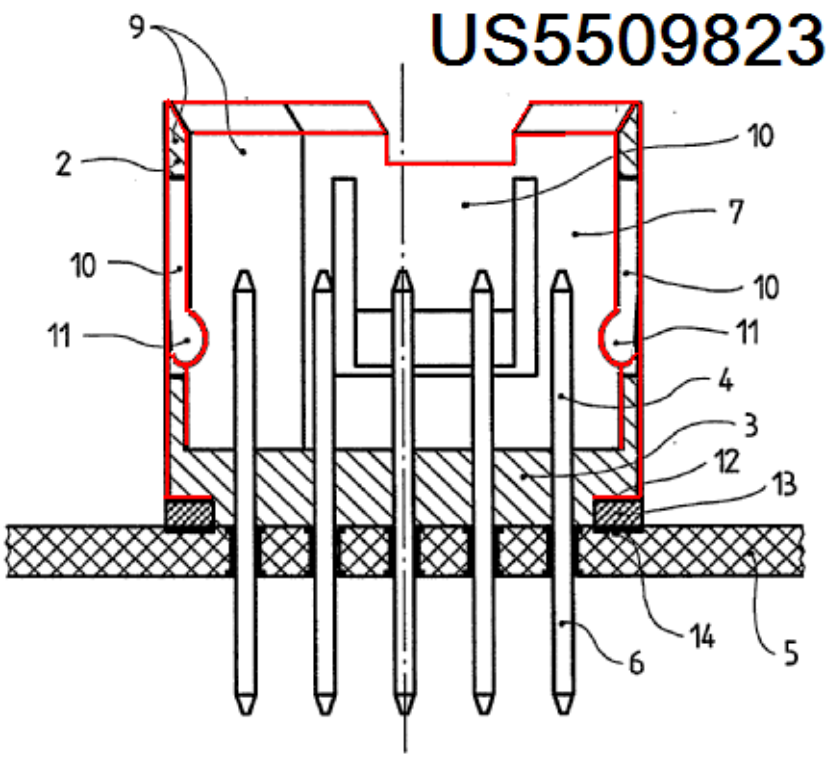

H01R 13/66

Structural association with built-in electrical component (Coupling devices having concentrically or coaxially-arranged contacts H01R 24/38-H01R 24/56)

Definition statement

This place covers:

Subject matter under group H01R 13/00 comprising details of the structural relationship of a coupling device other than a non-coaxial connector and an electrical component housed within the device.

References

Limiting references

This place does not cover:

Coupling devices having concentrically or coaxially-arranged contacts	H01R 24/38 - H01R 24/56

H01R 13/6608

{with built-in single component (H01R 13/68, H01R 13/70 take precedence)}

References

Limiting references

This place does not cover:

Structural association with built-in fuse	H01R 13/68
Structural association with built-in switch	H01R 13/70

H01R 13/6633

{with inductive component, e.g. transformer}

Definition statement

This place covers:

Illustrative example of subject matter classified in H01R 13/6633

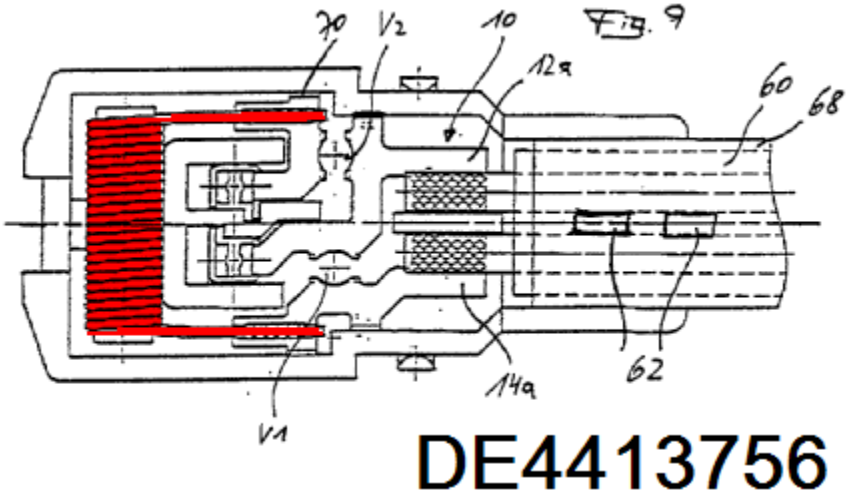

H01R 13/6641

{with diode (with LED H01R 13/7175)}

References

Limiting references

This place does not cover:

With LED	H01R 13/7175

H01R 13/665

{with built-in electronic circuit (H01R 13/70, H01R 13/719 take precedence)}

References

Limiting references

This place does not cover:

Structural association with built-in switch	H01R 13/70
Structural association with built-in component specially adapted for high frequency	H01R 13/719

H01R 13/6658

{on printed circuit board (H01R 13/6666 - H01R 13/6691 take precedence)}

Definition statement

This place covers:

Illustrative example of subject matter classified in H01R 13/6658

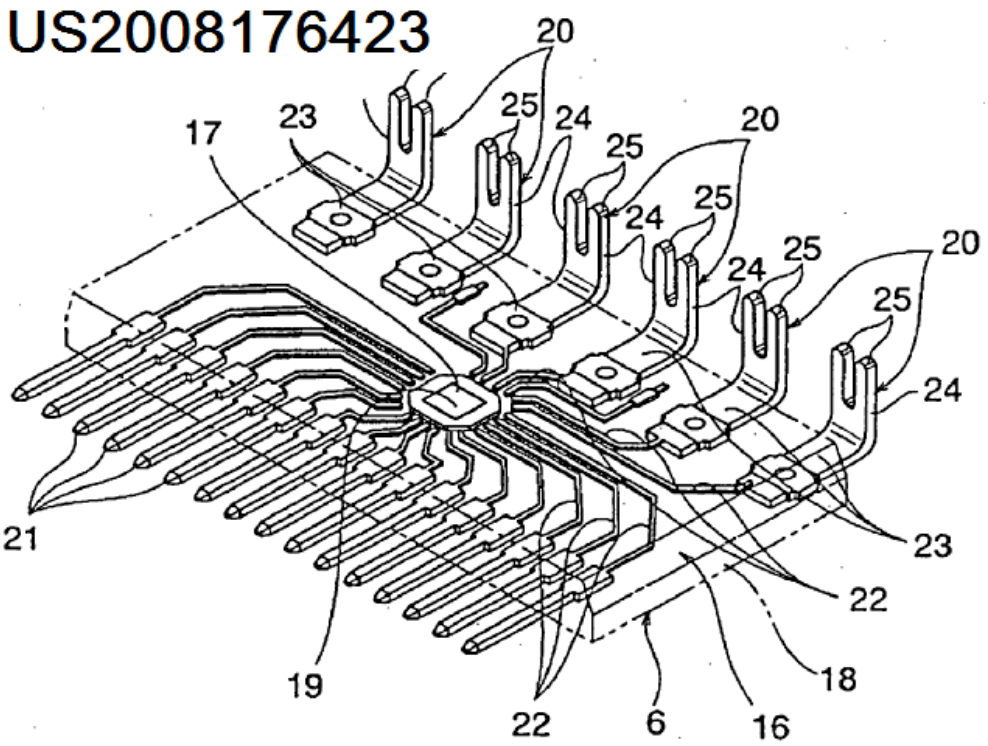

References

Limiting references

This place does not cover:

Structural association with built-in overvoltage protection	H01R 13/6666
Structural association with built-in signalling means	H01R 13/6691

H01R 13/6691

{with built-in signalling means (H01R 13/717 takes precedence)}

References

Limiting references

This place does not cover:

Built-in light source	H01R 13/717

H01R 13/68

with built-in fuse

Definition statement

This place covers:

Subject matter under group H01R 13/66 wherein the built-in electrical component is a fusible circuit breaker.

H01R 13/684

the fuse being removable

Definition statement

This place covers:

Subject matter under group H01R 13/68 wherein the built-in fuse is removable from the coupling device.

H01R 13/688

with housing part adapted for accessing the fuse

Definition statement

This place covers:

Subject matter under group H01R 13/684 wherein the coupling device includes an opening or a removable or repositionable portion which permits access to the built-in removable fuse.

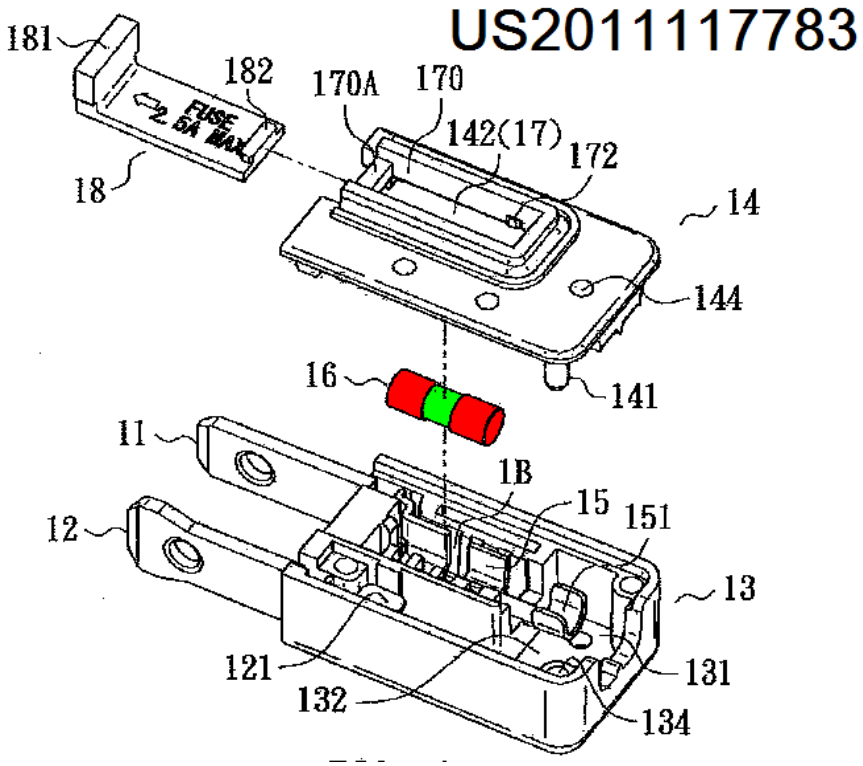

H01R 13/692

Turnable housing part

Definition statement

This place covers:

Subject matter under group H01R 13/688 wherein the housing part is rotatable, e.g. threadably connected or hinged, to permit access to the built-in removable fuse.

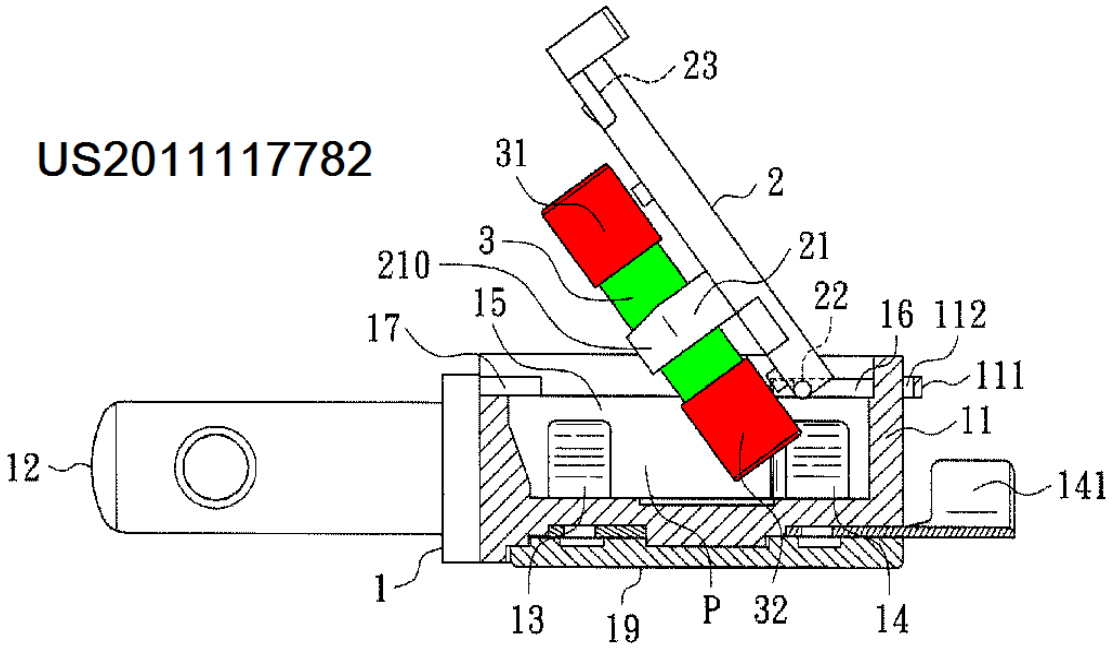

H01R 13/696

the fuse being integral with the terminal, e.g. pin or socket

Definition statement

This place covers:

Subject matter under group H01R 13/68 wherein the built-in fuse is irremovably attached to a contact

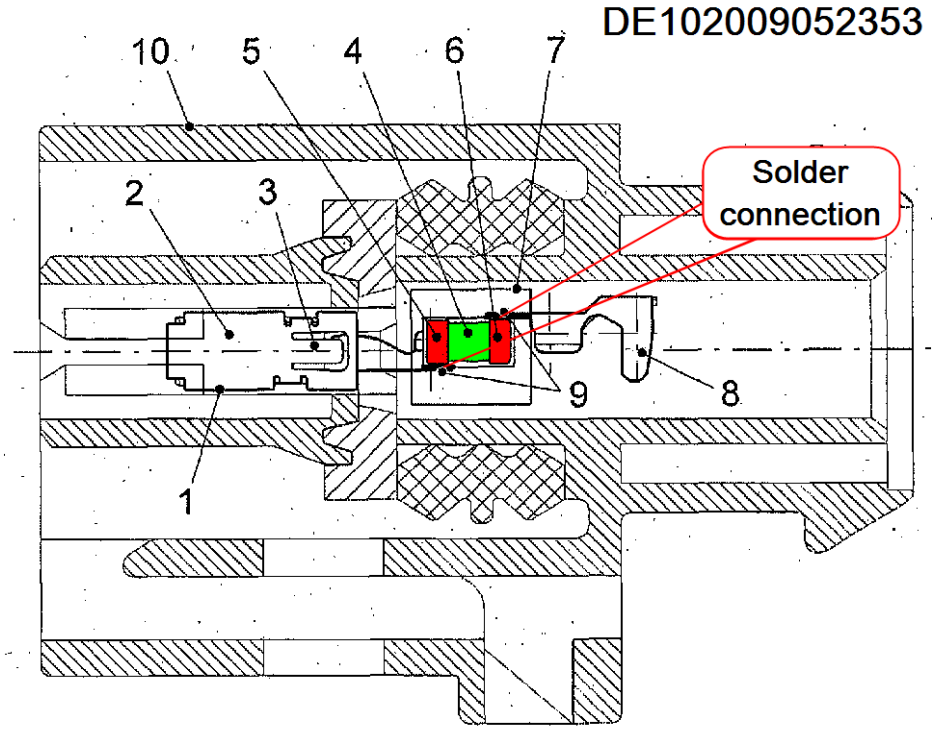

of the coupling device.

H01R 13/70

with built-in switch

Definition statement

This place covers:

Illustrative example of subject matter classified in H01R 13/70

GB2266811

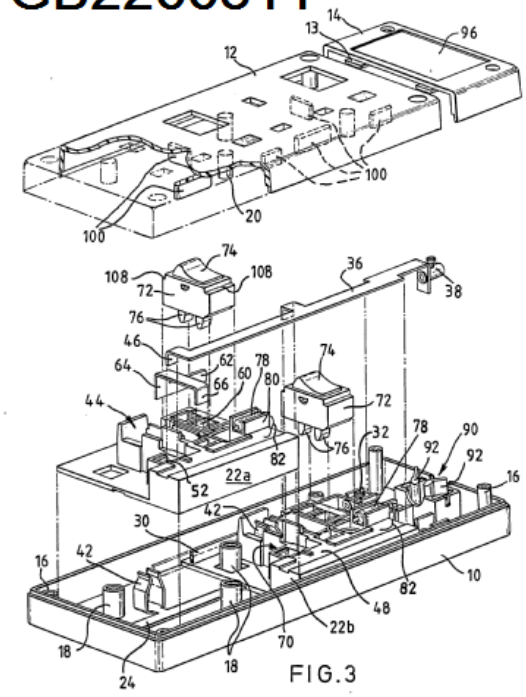

FIG.3

EP1073159

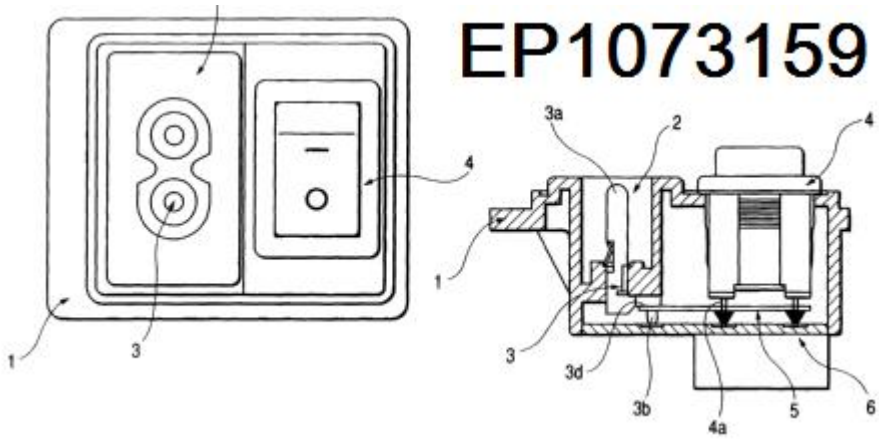

H01R 13/703

operated by engagement or disengagement of coupling parts, {e.g. dual-continuity coupling part} (H01R 13/71 takes precedence)

References

Limiting references

This place does not cover:

Contact members of coupling parts operating as switch	H01R 13/71

H01R 13/7034

{the terminals being in direct electric contact separated by double sided connecting element (for printed circuit boards H01R 12/7094)}

Definition statement

This place covers:

Illustrative example of subject matter classified in H01R 13/7034

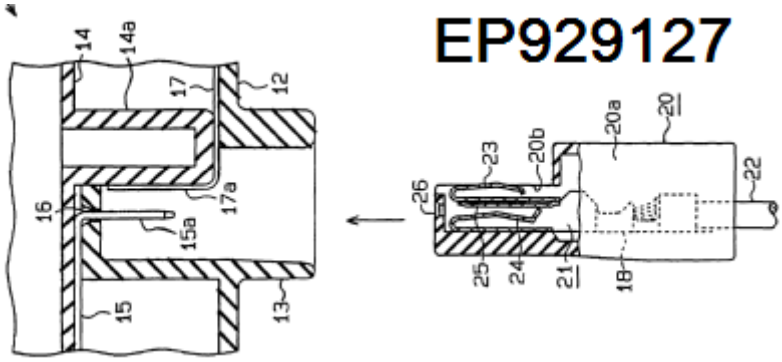

References

Limiting references

This place does not cover:

Terminals being in direct electric contact separated by double sided connecting element for printed circuit board	H01R 12/7094

H01R 13/71

Contact members of coupling parts operating as switch, {e.g. linear or rotational movement required after mechanical engagement of coupling part to establish electrical connection}

Definition statement

This place covers:

Illustrative example of subject matter classified in H01R 13/71

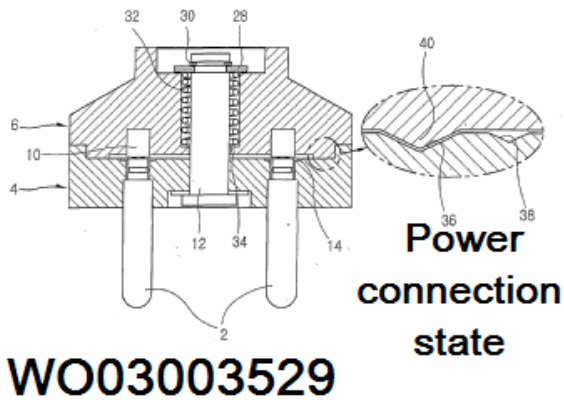

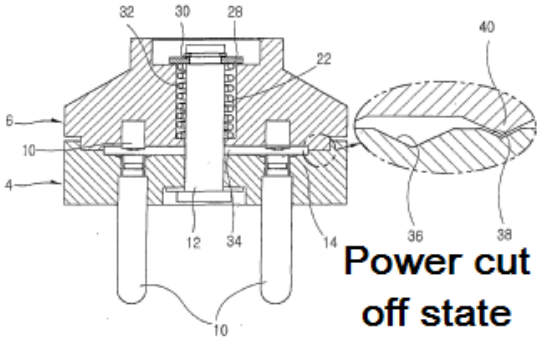

H01R 13/7135

{with ground fault protector (H01R 13/7132 takes precedence)}

Definition statement

This place covers:

Illustrative example of subject matter classified in H01R 13/7135

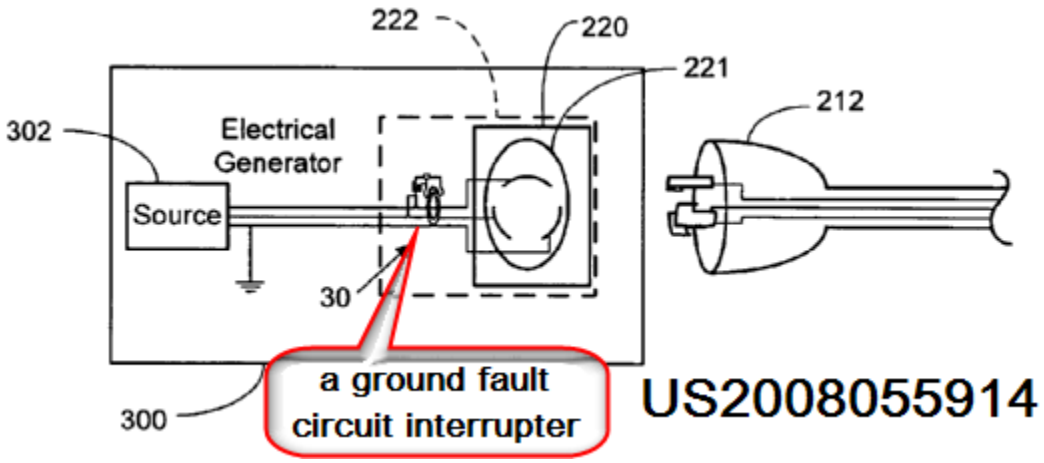

References

Limiting references

This place does not cover:

Safety switches having ejecting mechanisms	H01R 13/7132

H01R 13/7137

{with thermal interrupter (H01R 13/7132 takes precedence)}

References

Limiting references

This place does not cover:

Safety switches having ejecting mechanisms	H01R 13/7132

H01R 13/717

with built-in light source

Definition statement

This place covers:

Subject matter under group H01R 13/66 wherein in the built-in electrical component is an electric light source.

H01R 13/7175

{Light emitting diodes (LEDs)}

Definition statement

This place covers:

Illustrative example of subject matter classified in H01R 13/7175

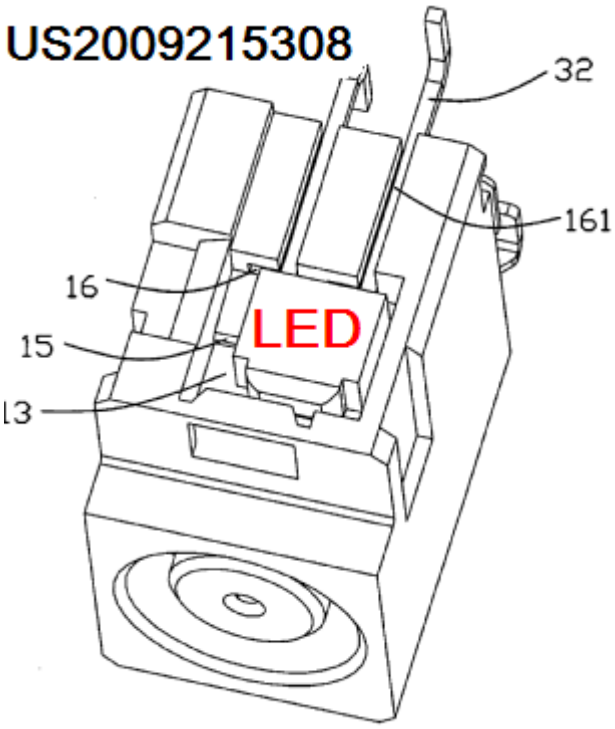

H01R 13/719

specially adapted for high frequency, e.g. with filters

Definition statement

This place covers:

Subject matter under group H01R 13/66 comprising coupling devices having built-in electrical components or other features which adapt for use with high frequency alternating currents or voltages.

Synonyms and Keywords

In patent documents, the following words/expressions are often used with the meaning indicated:

"filter"	"noise-reducing member".

H01R 13/7193

with ferrite filters

Definition statement

This place covers:

Subject matter under group H01R 13/719 wherein the built-in electrical component is a ferrite filter.

H01R 13/7195

with planar filters with openings for contacts

Definition statement

This place covers:

Subject matter under group H01R 13/719 wherein the built-in electrical component consists of a flat, i.e. essentially two-dimensional, filter circuit device, e.g. a PCB with a filter fixed thereon, with apertures to permit engagement of mating contacts.

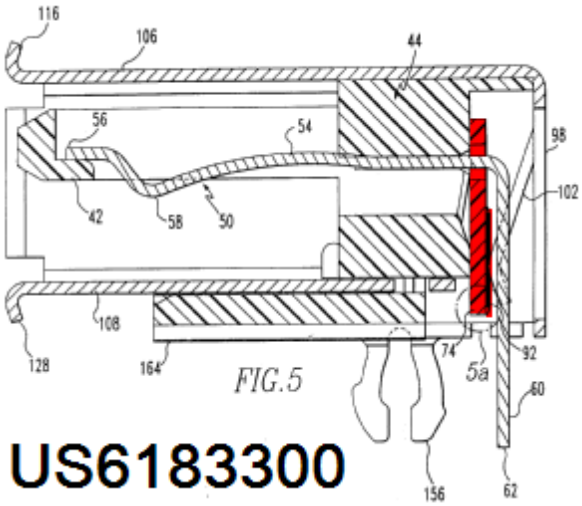

(Examples: US 4729752; US 6183300)

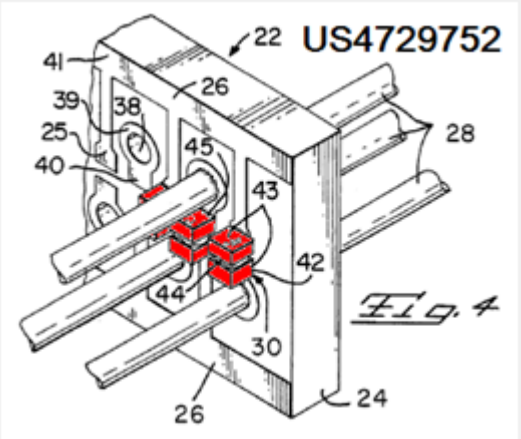

H01R 13/7197

with filters integral with or fitted onto contacts, e.g. tubular filters

Definition statement

This place covers:

Subject matter under group H01R 13/719 wherein the built-in electrical component consists of a filter integral with, or fitted onto, at least one connector contact.

(Example: US 6431916)

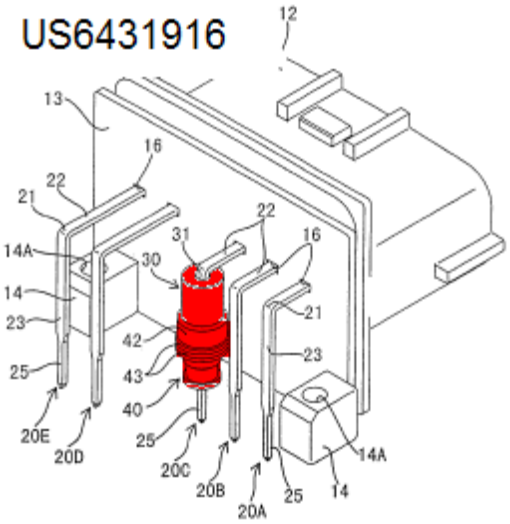

H01R 13/72

Means for accommodating flexible lead within the holder

Definition statement

This place covers:

Illustrative example of subject matter classified in H01R 13/72

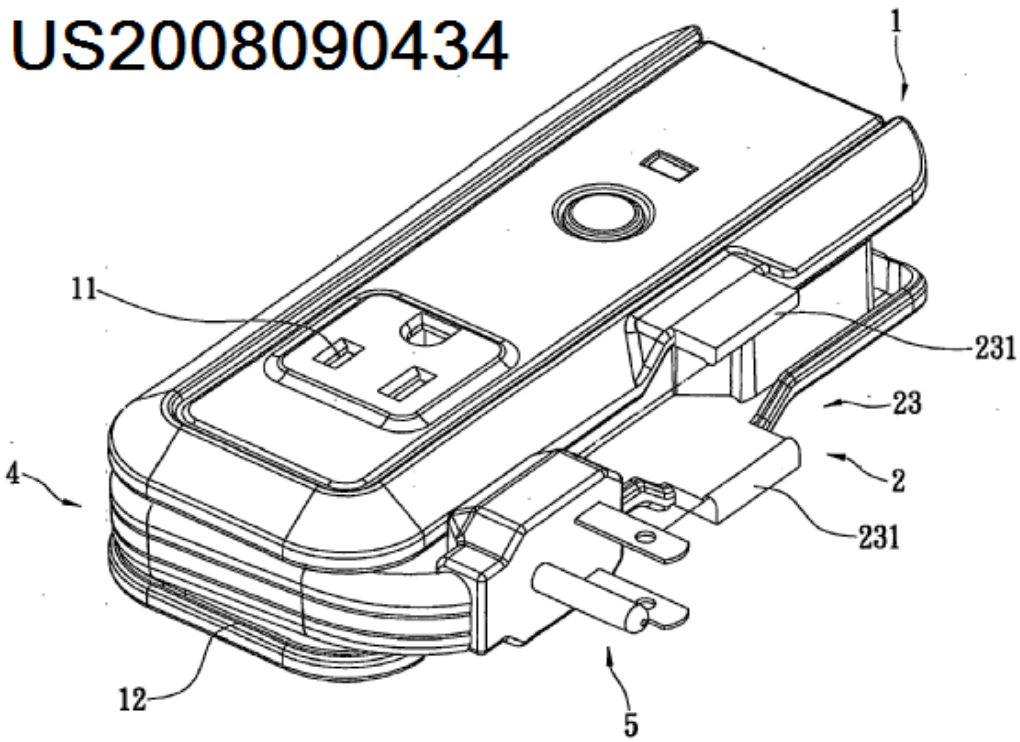

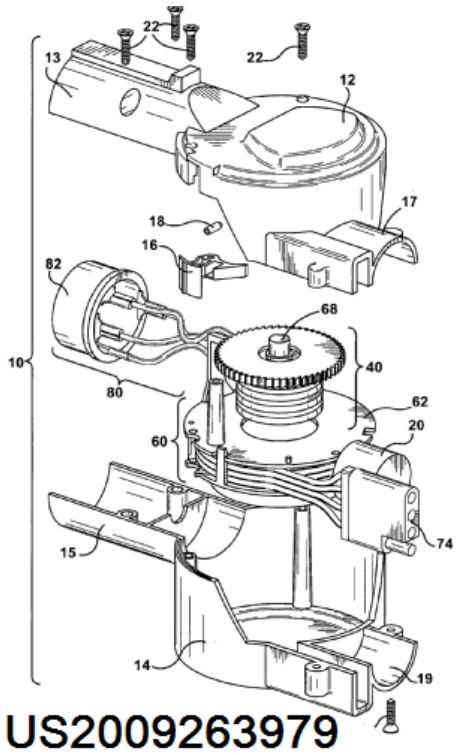

H01R 13/73

Means for mounting coupling parts to apparatus or structures, e.g. to a wall

Definition statement

This place covers:

Illustrative example of subject matter classified in H01R 13/73

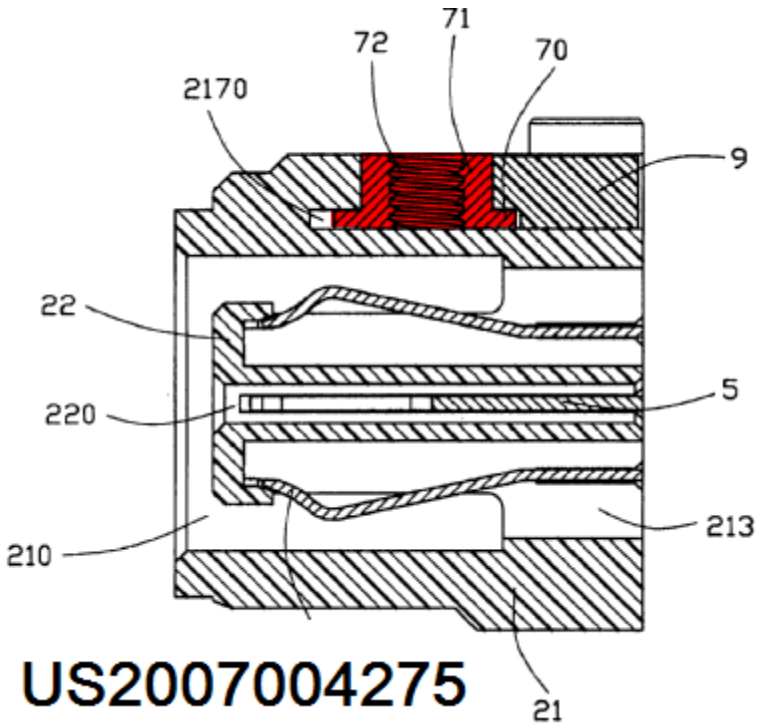

H01R 13/743

{integral with the housing}

Definition statement

This place covers:

Illustrative example of subject matter classified in H01R 13/743

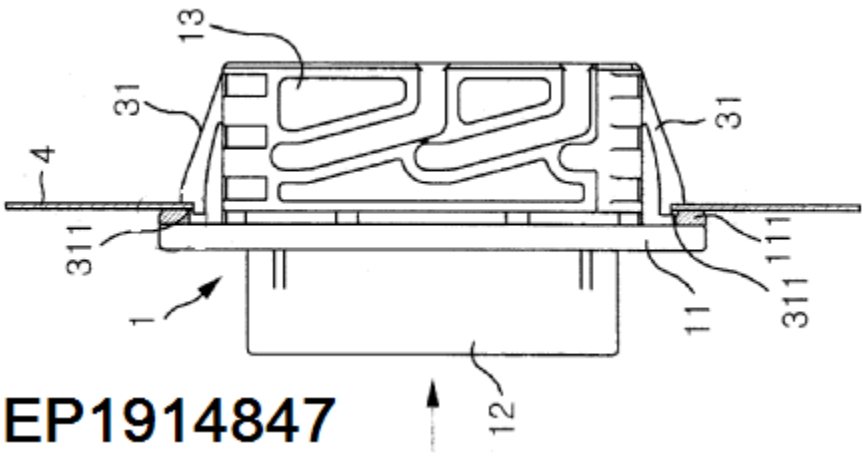

H01R 13/745

{separate from the housing}

Definition statement

This place covers:

Illustrative example of subject matter classified in H01R 13/745

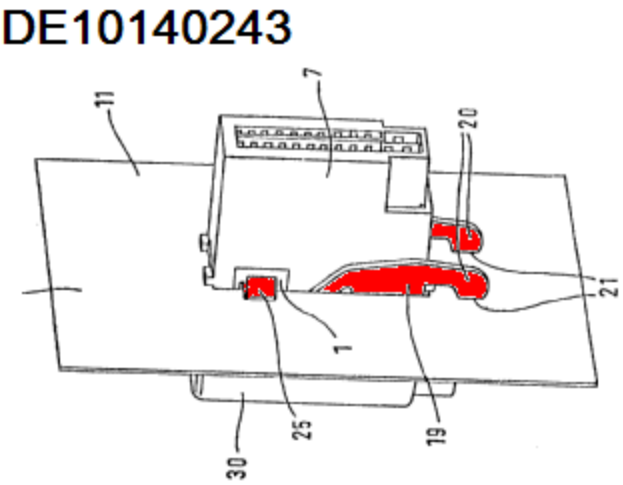

H01R 13/748

{using one or more screws (H01R 13/746 takes precedence)}

References

Limiting references

This place does not cover:

Means for mounting coupling parts in openings of a panel using a screw ring	H01R 13/746

H01R 15/00

Two-part coupling devices having a single pole, with or without additional protective earth connection (with a holder adapted for supporting apparatus to which its counterpart is attachedH01R 33/02; [N: for sparking plugsH01T 13/04])

References

Limiting references

This place does not cover:

With a holder adapted for supporting apparatus to which its counterpart is attached	H01R 33/02
For sparking plugs	H01T 13/04

H01R 17/00

[N: IPC6] Two-part coupling devices having two poles, with or without additional protective earth connection; Separate parts thereof (H01R19/00takes precedence; with a holder adapted for supporting apparatus to which its counterpart is attachedH01R 33/00)

References

Limiting references

This place does not cover:

With a holder adapted for supporting apparatus to which its counterpart is attached	H01R 33/00

H01R 19/00

[N: IPC6] Two-part coupling devices having two poles, with or without additional protective earth connection, and with two current-carrying pins, blades, or analogous contacts, having their axes parallel to each other and slidingly co-operating with separate sockets, clips, or analogous counter-contacts; Separate parts thereof (with a holder adapted for supporting apparatus to which its counterpart is attachedH01R 33/05)

References

Limiting references

This place does not cover:

With a holder adapted for supporting apparatus to which its counterpart is attached	H01R 33/05

H01R 19/40

[N: IPC6] Coupling parts carrying two sockets, clips, or analogous counter-contacts and secured two apparatus or structure, e.g. wall[N: (for holding coupling parts togetherH01R 13/6395)]

References

Limiting references

This place does not cover:

For holding coupling parts together	H01R 13/6395

H01R 21/00

[N: IPC6] Two-part coupling devices having three poles, with or without additional protective earth connection, e.g. for three-phase circuits; Separate parts thereof (with a holder adapted for supporting apparatus to which its counterpart is attachedH01R 33/72)

References

Limiting references

This place does not cover:

With a holder adapted for supporting apparatus to which its counterpart is attached	H01R 33/72

H01R 21/22

[N: IPC6] having the contacts of each coupling part arranged in line parallel with the direction of coupling-engaging motion, e.g. telephone-jack type [N: (for two polesH01R17/18)]

References

Limiting references

This place does not cover:

For two poles	**H01R17/18**

H01R 23/005

{comprising means for reducing cross-talk, e.g. special layout of conductors between input and output pins (by shielding of neighboring signal paths H01R 13/65807, H01R 23/688; twisted pair cables H01B 11/02; in line transmission systems H04B 3/32; ground circuit layout on printed circuit boards H05K 9/0039)}

References

Limiting references

This place does not cover:

By shielding of neighboring signal paths	H01R 13/65807, H01R 23/688
Twisted pair cables	H01B 11/02
In line transmission systems	H04B 3/32
Ground circuit layout on printed circuit boards	H05K 9/0039

H01R 23/27

{Hermaphroditic coupling devices (hermaphroditic contact members H01R 13/28)}

References

Limiting references

This place does not cover:

Hermaphroditic contact members	H01R 13/28

H01R 23/662

{Earth or shield arrangements (in general H01R 13/648)}

References

Limiting references

This place does not cover:

Earth or shield arrangements in general	H01R 13/648

H01R 23/664

{Coupling parts carrying pins, blades or analogous contacts (H01R 23/667, H01R 23/668 take precedence)}

References

Limiting references

This place does not cover:

Two-part coupling devices for connection of flat or ribbon cables between each other	H01R 23/667
Two-part coupling devices for connection of flat or ribbon cables to a printed circuit board	H01R 23/668

H01R 23/665

{Coupling parts carrying sockets, clips or analogous countercontacts (H01R 23/667, H01R 23/668 take precedence)}

References

Limiting references

This place does not cover:

Two-part coupling devices for connection of flat or ribbon cables between each other	H01R 23/667
Two-part coupling devices for connection of flat or ribbon cables to a printed circuit board	H01R 23/668

H01R 23/68

{for connection to or between printed circuits; Non printed connecting arrangements of printed circuit boards (PCB's) (H01R 23/668 takes precedence)}

References

Limiting references

This place does not cover:

Two-part coupling devices for connection of flat or ribbon cables to a printed circuit board	H01R 23/668

H01R 23/6806

{for connection between PCB and component, e.g. display (plugging components in general H05K 7/10)}

References

Limiting references

This place does not cover:

Plugging components in general	H05K 7/10

H01R 23/6833

{acting linearly (H01R 23/6846, H01R 23/6853 and H01R 23/686 take precedence)}

References

Limiting references

This place does not cover:

Contact pressure producing means activated after insertion of PCB, acting automatically by insertion of PCB	H01R 23/6846
Contact pressure producing means activated after insertion of PCB, fluid activated	H01R 23/6853
Contact pressure producing means activated after insertion of PCB, activated by shape memory material	H01R 23/686

H01R 23/684

{acting by rotation or by pivoting (H01R 23/6846, H01R 23/6853 and H01R 23/686 take precedence)}

References

Limiting references

This place does not cover:

Contact pressure producing means activated after insertion of PCB, acting automatically by insertion of PCB	H01R 23/6846
Contact pressure producing means activated after insertion of PCB, fluid activated	H01R 23/6853
Contact pressure producing means activated after insertion of PCB, activated by shape memory material	H01R 23/686

H01R 23/6893

{Connectors for contacting one or more arrays of pins or sockets mounted on a PCB (counterparts presenting such arrays H01R 23/7073)}

References

Limiting references

This place does not cover:

Counterparts presenting such arrays	H01R 23/7073

H01R 23/70

{co-operating with the edge of the printed circuit or with a counterpart provided on the edge of the printed circuit (H01R 23/6813 takes precedence); Counterparts therefor; Special features of the edge of the board}

References

Limiting references

This place does not cover:

Two-part coupling devices with low or zero insertion force	H01R 23/6813

H01R 23/7005

{Guiding, mounting, polarizing or locking means; Extractors (for printed circuit boards H05K)}

References

Limiting references

This place does not cover:

Printed circuit boards	H05K

H01R 23/7031

{involving non-elastic deformation, e.g. plastic deformation, melting (H01R 23/7057 takes precedence)}

References

Limiting references

This place does not cover:

Press fitting	H01R 23/7057

H01R 23/72

{co-operating with the surface of the printed circuit or with a counterpart provided on the surface of the printed circuit (H01R 23/6813, H01R 23/70 take precedence)}

References

Limiting references

This place does not cover:

Two-part coupling devices with low or zero insertion force	H01R 23/6813
Co-operating with the edge of the printed circuit or with a counterpart provided on the edge of the printed circuit	H01R 23/70

H01R 23/727

{Contact members provided on the PCB without an insulating housing (contacts for abutting H01R 23/722)}

References

Limiting references

This place does not cover:

Contacts for abutting	H01R 23/722

H01R 24/00

Two-part coupling devices, or either of their cooperating parts, characterised by their overall structure (specially adapted for printed circuits, flat or ribbon cables, or like structures H01R 12/00; specially adapted for supporting apparatus H01R 33/00)

Definition statement

This place covers:

Coupling devices attached to cables or attached to structures

References

Limiting references

This place does not cover:

Contact members	H01R 13/02
Securing contact members in or to a base or case; Insulating of contact members	H01R 13/40
Bases; Cases	H01R 13/46
Means for supporting coupling part when not engaged	H01R 13/60
Means for facilitating engagement or disengagement of coupling parts or for holding them in engagement	H01R 13/62
Means for preventing, inhibiting or avoiding incorrect coupling	H01R 13/64
Special adaptation for high-frequency, e.g. structures providing an impedance match or phase match	H01R 13/646
Protective earth or shield arrangements on coupling devices	H01R 13/648
Structural association with built-in electrical component	H01R 13/66
Coupling devices in which a holder is adapted for supporting apparatus to which its counterpart is attached; Separate parts thereof	H01R 33/00

Informative references

Attention is drawn to the following places, which may be of interest for search:

One pole	H01R 2101/00
Two poles	H01R 2103/00
Three poles	H01R 2105/00
Four or more poles	H01R 2107/00

Special rules of classification

An Indexing Code of the groups H01R 2101/00- H01R 2107/00 is preferably given to each document classified in this group and the sub-groups.

H01R 24/20

Coupling parts carrying sockets, clips or analogous contacts and secured only to wire or cable

Definition statement

This place covers:

The subject matter under H01R 24/20 comprises cooperating parts having cavities with conducting properties extending into a support structure. At least one of the cavities is connected to an elongated electrical conductor attached to the support structure.

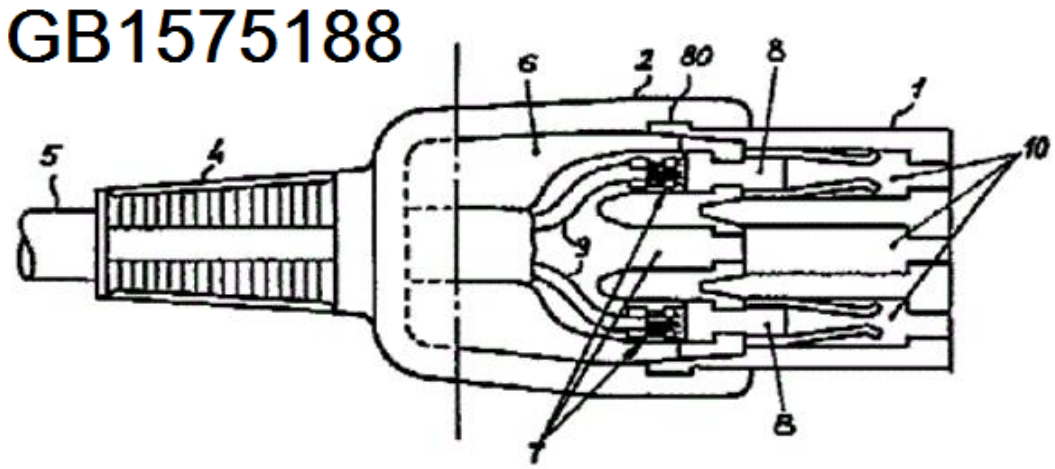

H01R 24/22

with additional earth or shield contacts

Definition statement

This place covers:

The subject matter under H01R 24/22 comprises cooperating parts having cavities with conducting properties extending into a support structure. At least one of the cavities is connected to an elongated electrical conductor attached to the support structure, whereby the support structure comprises a grounding structure.

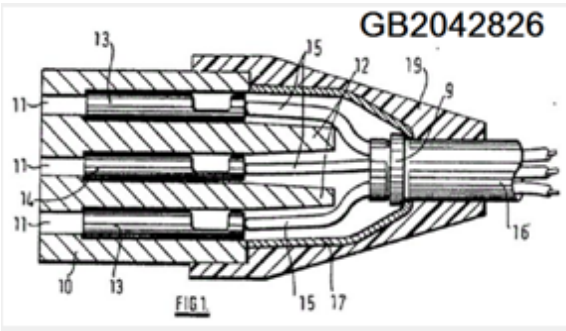

H01R 24/28

Coupling parts carrying pins, blades or analogous contacts and secured only to wire or cable

Definition statement

This place covers:

The subject matter under H01R 24/28 comprises cooperating parts having protruding members with conducting properties extending from a support.

At least one of the protruding members is connected to an elongated electrical conductor.

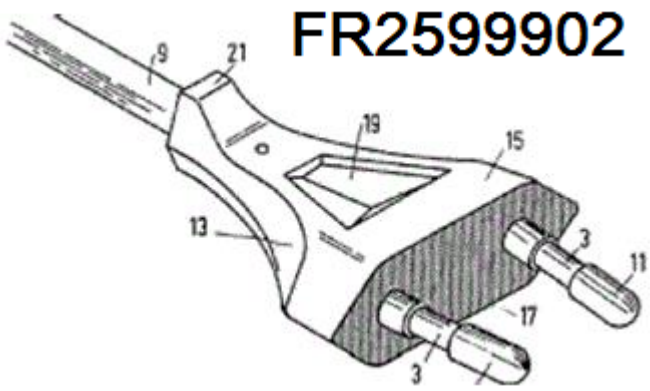

H01R 24/30

with additional earth or shield contacts

Definition statement

This place covers:

The subject matter under H01R 24/30 comprises cooperating parts having protruding members with conducting properties extending from a support structure and connected to an elongated electrical conductor, whereby one conductor is grounded.

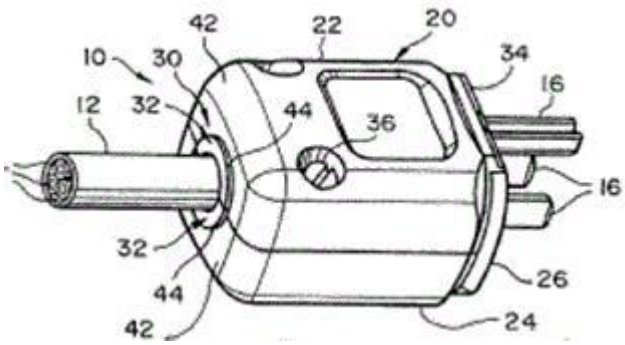

H01R 24/38

having concentrically or coaxially arranged contacts

Definition statement

This place covers:

The subject matter under H01R 24/38 comprises cooperating parts having a center contact and cylindrical contacts concentrically disposed thereabout.

DE8424348U

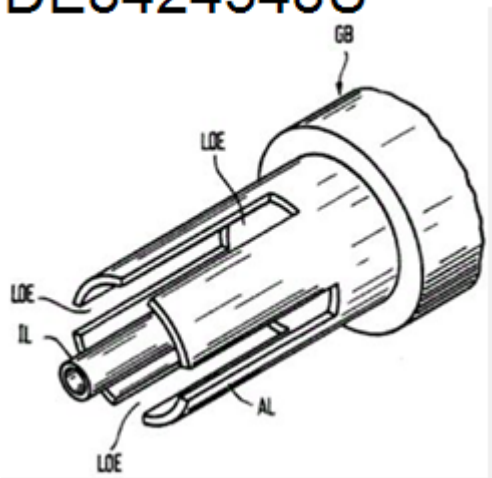

H01R 24/40

specially adapted for high frequency

Definition statement

This place covers:

The subject matter under H01R 24/40 comprises cooperating parts having a center contact and cylindrical contacts concentrically disposed thereabout and adapted for signals used for radio transmission.

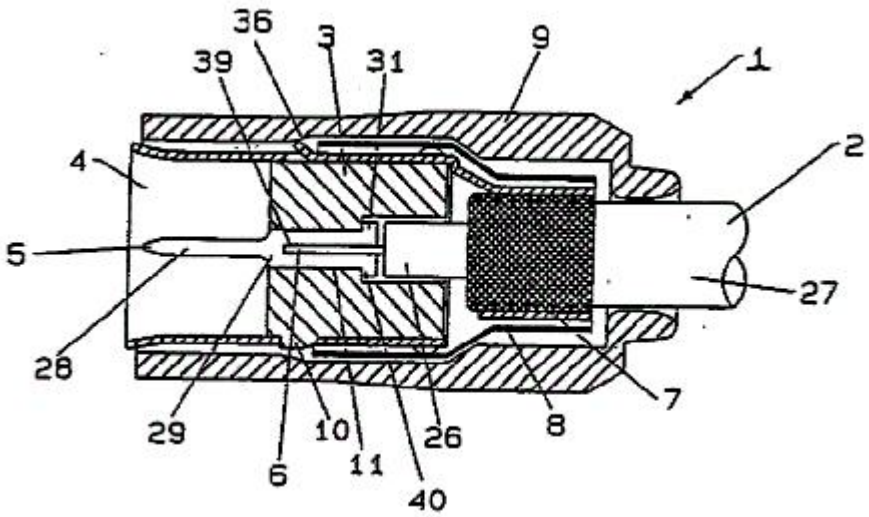

DE19528552

H01R 24/42

comprising impedance matching means or electrical components, e.g. filters or switches

Definition statement

This place covers:

The subject matter under H01R 24/42 comprises cooperating parts for radio transmission having a center contact and cylindrical contacts concentrically disposed thereabout and at least one component, except components covered by H01R 24/46 or H01R 24/48.

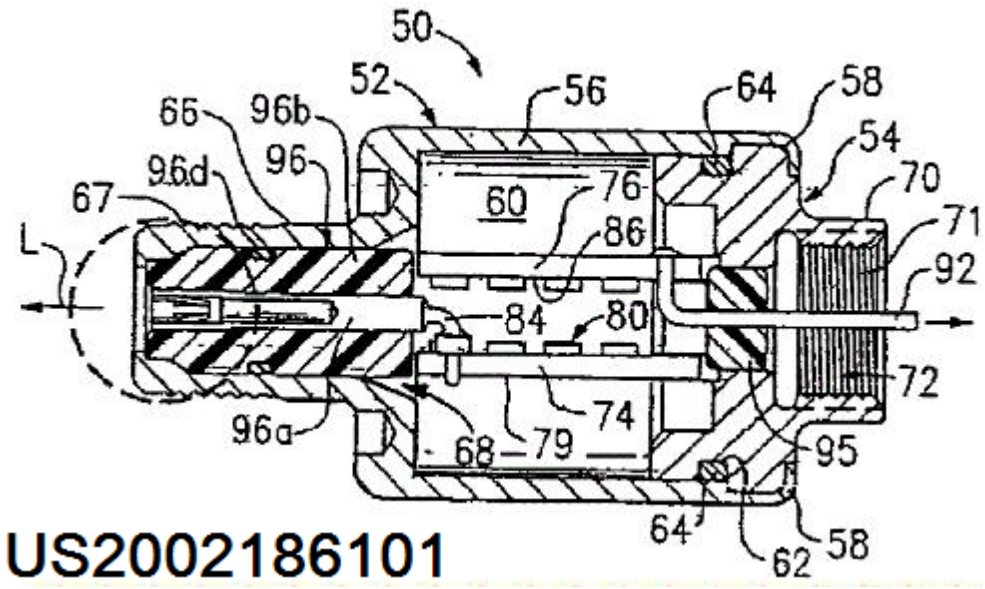

References

Informative references

Attention is drawn to the following places, which may be of interest for search:

Impedance matching, filters per se	H03H

H01R 24/44

comprising impedance matching means

Definition statement

This place covers:

The subject matter under H01R 24/44 comprises cooperating parts for radio transmission having a center contact and cylindrical contacts concentrically disposed thereabout and means for setting the

output impedance of a signal source equal to the input impedance of the load to which it is ultimately connected, usually in order to maximize the power transfer and minimize reflections from the load.

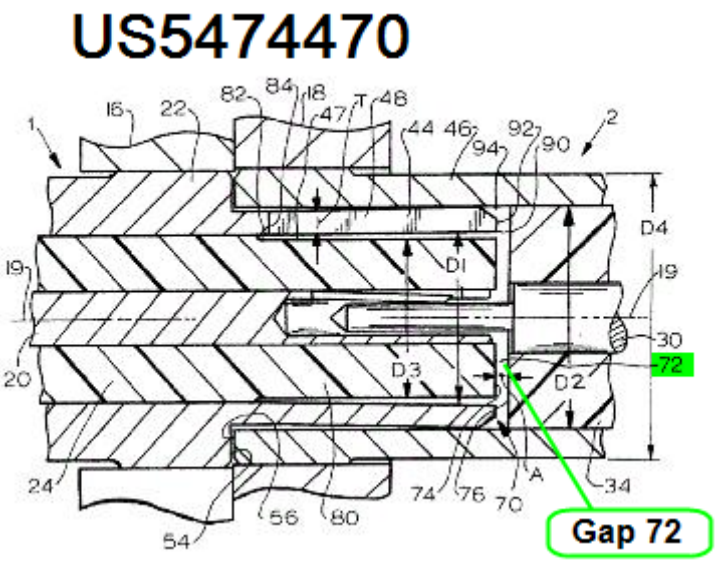

References

Limiting references

This place does not cover:

Impedance matching switches	**H01R17/12H4**

H01R 24/46

comprising switches

Definition statement

This place covers:

The subject matter under H01R 24/46 comprises cooperating parts for radio transmission having a center contact and a cylindrical contact concentrically disposed thereabout and means for interrupting, shorting or bypassing signals carried by the center contact.

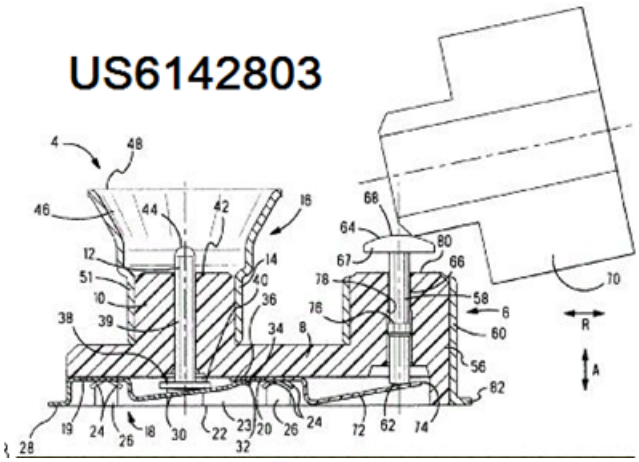

H01R 24/48

comprising protection devices, e.g. overvoltage protection

Definition statement

This place covers:

The subject matter under H01R 24/48 comprises cooperating parts for radio transmission having a center contact and a cylindrical contact concentrically disposed thereabout and means for reducing voltages above its upper design limit (e.g. transient voltages or voltage spikes).

EP1780840

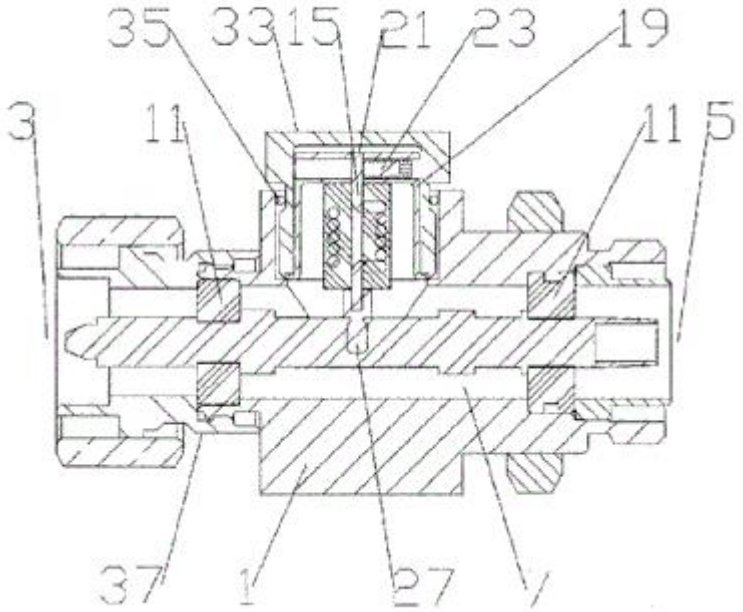

H01R 24/50

mounted on a PCB [Printed Circuit Board]

Definition statement

This place covers:

The subject matter under H01R 24/50 comprises cooperating parts for radio transmission having a center contact and a cylindrical contact concentrically disposed thereabout, and adapted for mounting on a substrate providing electrically conductive paths.

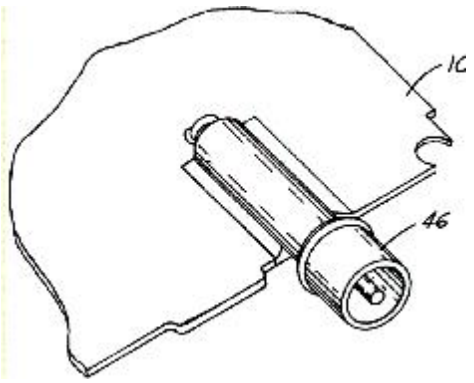

US6140977

H01R 24/52

mounted in or to a panel or structure

Definition statement

This place covers:

The subject matter under H01R 24/52 comprises cooperating parts for radio transmission having a center contact and a cylindrical contact concentrically disposed thereabout and adapted for mounting on a support except a printed circuit board as in H01R 24/50.

US6679726

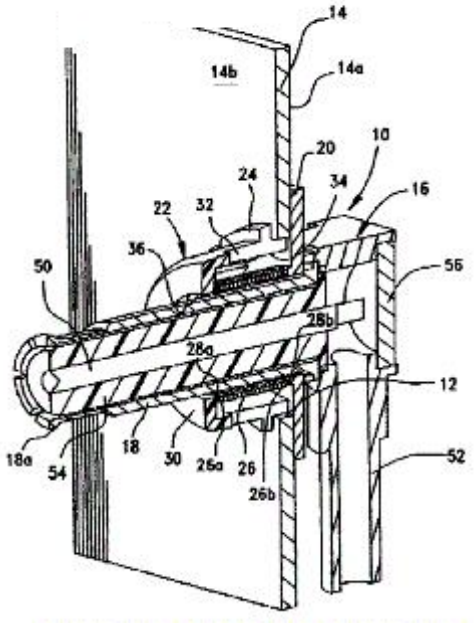

H01R 24/54

Intermediate parts, e.g. adapters, splitters or elbows

Definition statement

This place covers:

The subject matter under H01R 24/54 comprises cooperating parts for radio transmission having a center contact and a cylindrical contact concentrically disposed thereabout and specially adapted as coupling part between two or more counterparts, characterized by the relationship of the counterparts,

e.g. different kinds of counterparts, right angle relationship between counterparts, one counterpart connected to a plurality of counterparts.

US4687446

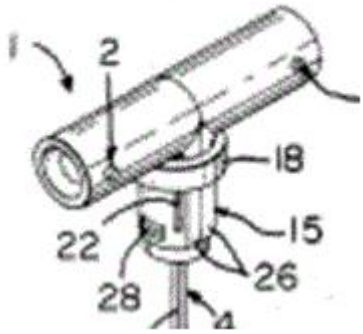

H01R 24/56

specially adapted to a specific shape of cables, e.g. corrugated cables, twisted pair cables, cables with two screens or hollow cables

Definition statement

This place covers:

The subject matter under H01R 24/56 comprises a plurality of cooperating parts for radio transmission having a center contact and a cylindrical contact concentrically disposed thereabout, being adapted to connect elongated conductors having a center conductor and a shielding layer with special features.

US7189115

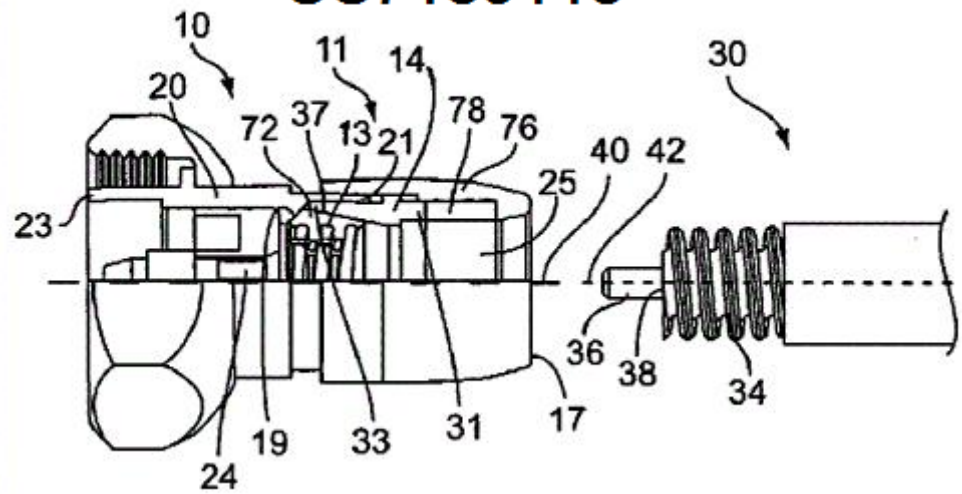

H01R 24/58

Contacts spaced along longitudinal axis of engagement

Definition statement

This place covers:

The subject matter under H01R 24/58 comprises coupling parts with contacts disposed serially along a line parallel to the longitudinal axis along which the coupling part engages its mating coupling part.

US2004198442

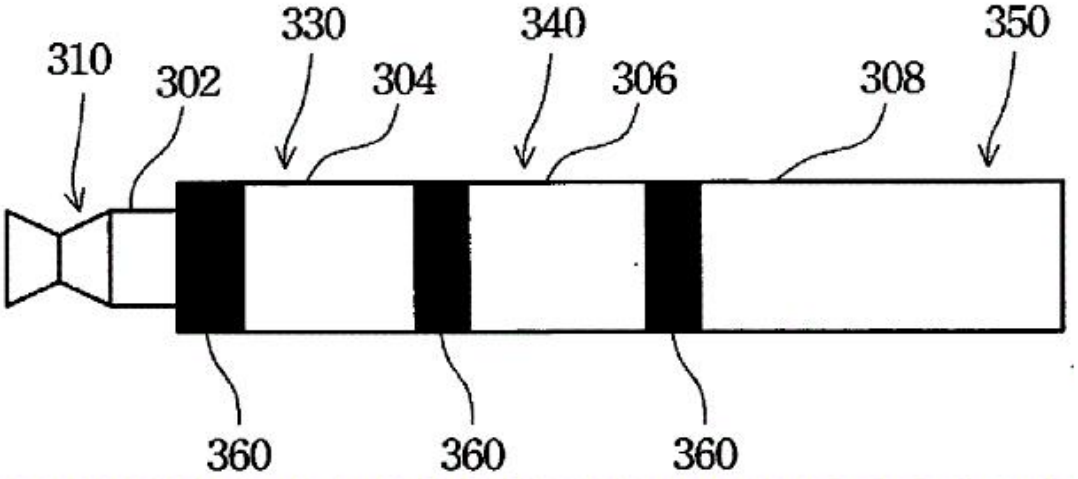

H01R 24/60

Contacts spaced along planar side wall transverse to longitudinal axis of engagement

Definition statement

This place covers:

The subject matter under H01R 24/60 comprises coupling parts with contacts disposed serially along a line orthogonal to the longitudinal axis along which the coupling part engages its mating coupling part.

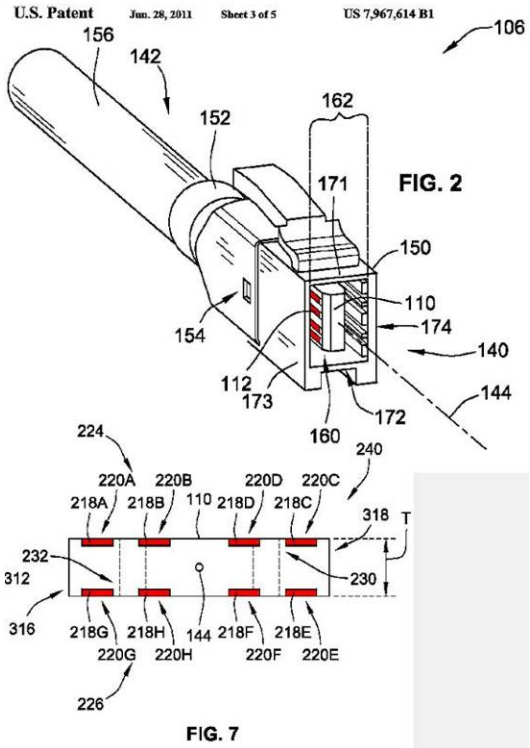

US2007178734

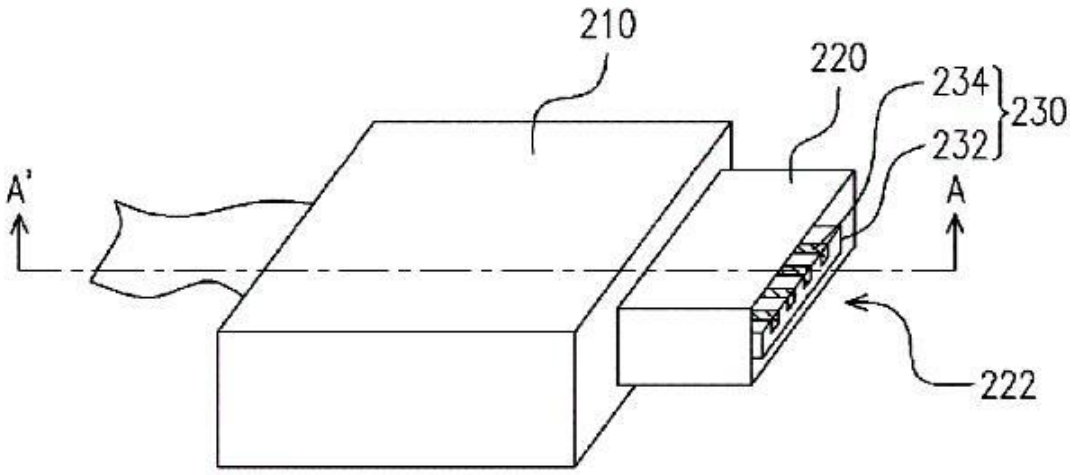

H01R 24/62

Sliding engagements with one side only, e.g. modular jack coupling devices

Definition statement

This place covers:

The subject matter under H01R 24/62 comprises coupling parts with contacts disposed serially along a surface orthogonal to the longitudinal axis along which the coupling part engages, its mating coupling part being accessible only on one side.

US3617982

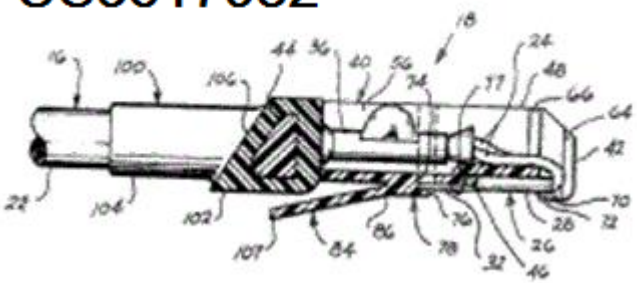

H01R 24/64

for high frequency, e.g. RJ 45

Definition statement

This place covers:

The subject matter under H01R 24/64 comprises coupling parts with contacts disposed serially along a surface orthogonal to the longitudinal axis along which the coupling part engages its mating coupling part, the coupling part has special features for high speed transmissions.

US2005153580

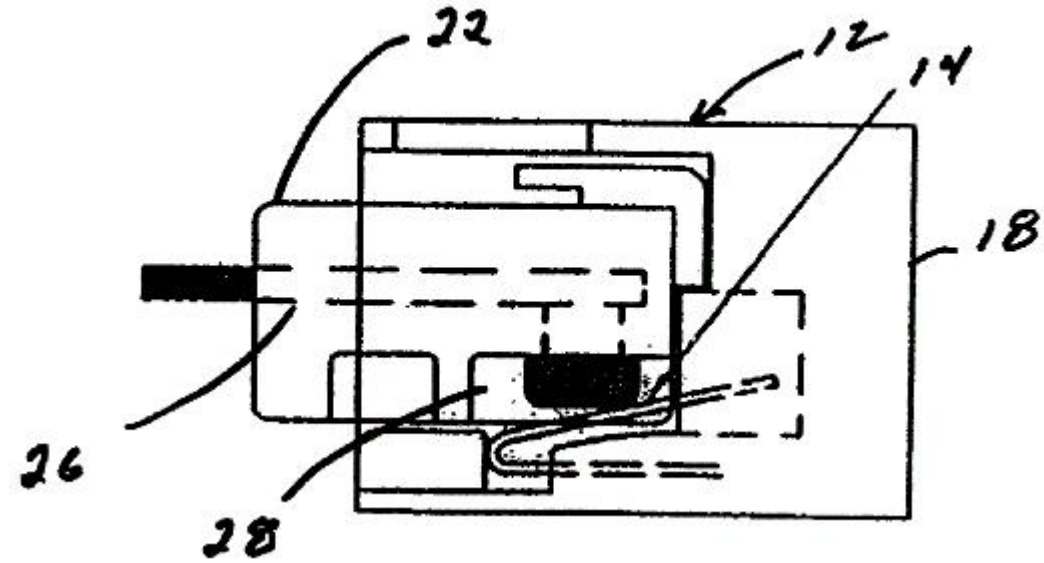

H01R 24/66

with pins, blades or analogous contacts and secured to apparatus or structure, e.g. to a wall

Definition statement

This place covers:

The subject matter under H01R 24/66 comprises cooperating parts having protruding members with conducting properties extending from a support attached to a wall of an apparatus or structure.

US2007066111

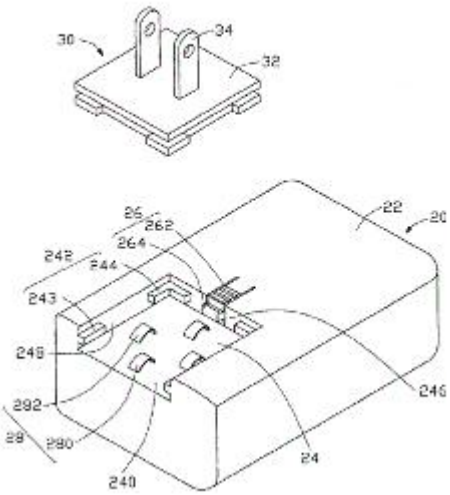

H01R 24/68

mounted on directly pluggable apparatus

Definition statement

This place covers:

The subject matter under H01R 24/68 comprises cooperating parts having protruding members with conducting properties extending from a portable device.

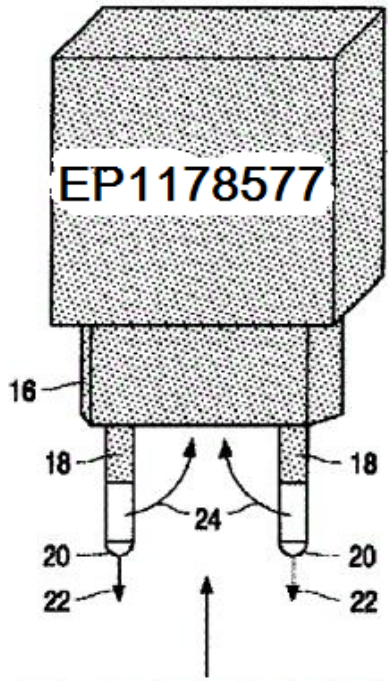

H01R 24/70

with additional earth or shield contacts

Definition statement

This place covers:

The subject matter under H01R 24/70 comprises cooperating parts having protruding members with conducting properties extending from a support, one of the protrusions on the portable device having grounding means.

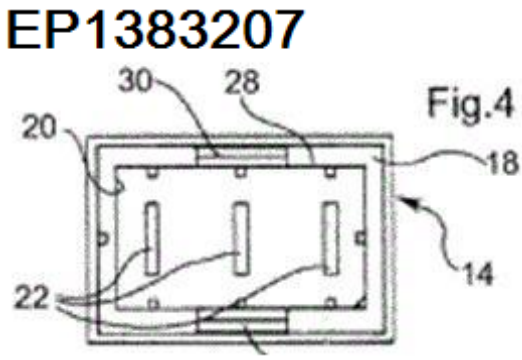

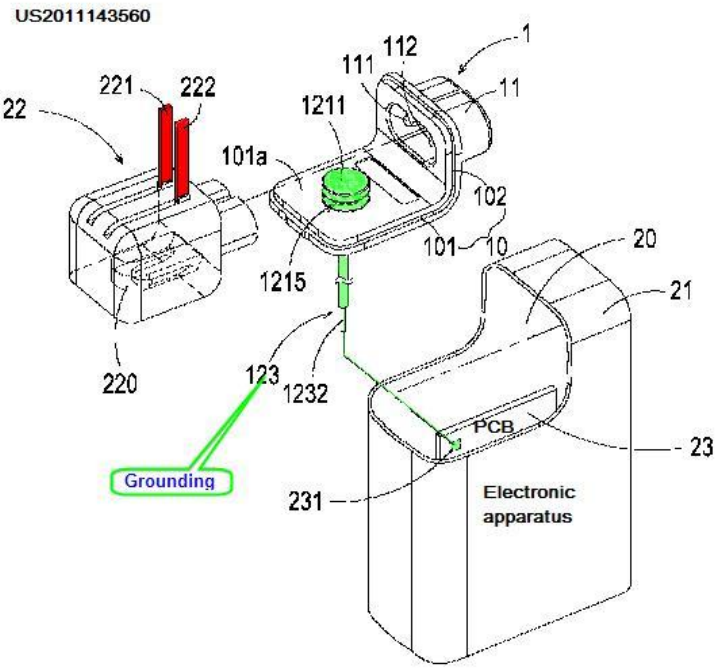

FIG. 5

H01R 24/76

with sockets, clips or analogous contacts and secured to apparatus or structure, e.g. to a wall

Definition statement

This place covers:

The subject matter under H01R 24/76 comprises cooperating parts having recesses with conducting properties extending into a support attached to a wall of an apparatus or structure.

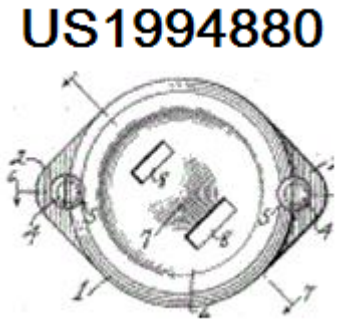

H01R 24/78

with additional earth or shield contacts

Definition statement

This place covers:

The subject matter under H01R 24/78 comprises cooperating parts having recesses with conducting properties extending into a support attached to a wall of an apparatus or structure, one of the recesses having grounding means.

US6786766

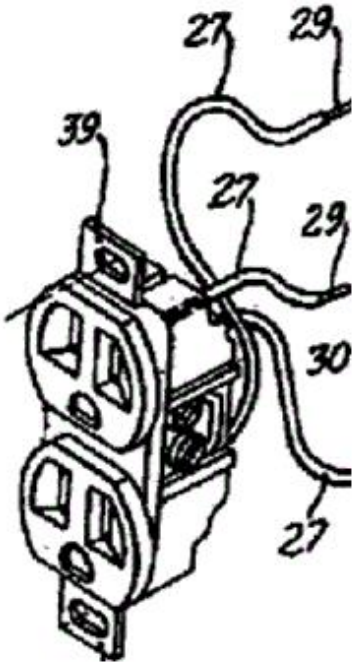

H01R 24/84

Hermaphroditic coupling devices

Definition statement

This place covers:

The subject matter under H01R 24/84 comprises cooperating parts which are identical in configuration in the interfitting portions thereof.

GB2436897

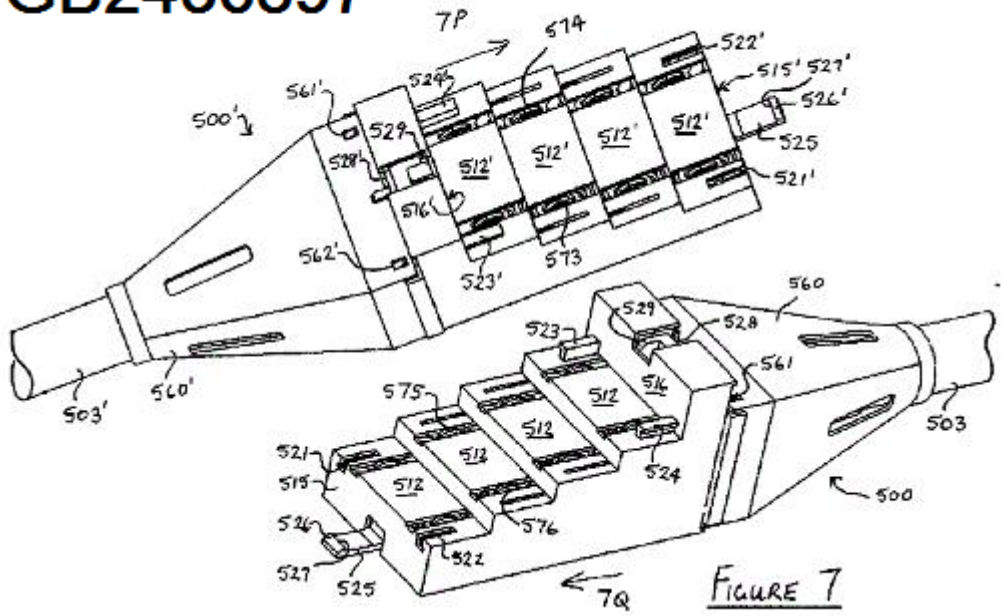

H01R 24/86

Parallel contacts arranged about a common axis

Definition statement

This place covers:

The subject matter under H01R 24/86 comprises cooperating parts with electrically mating conductors extending in the same direction about the longitudinal axis along which the cooperating part engages its mating coupling part.

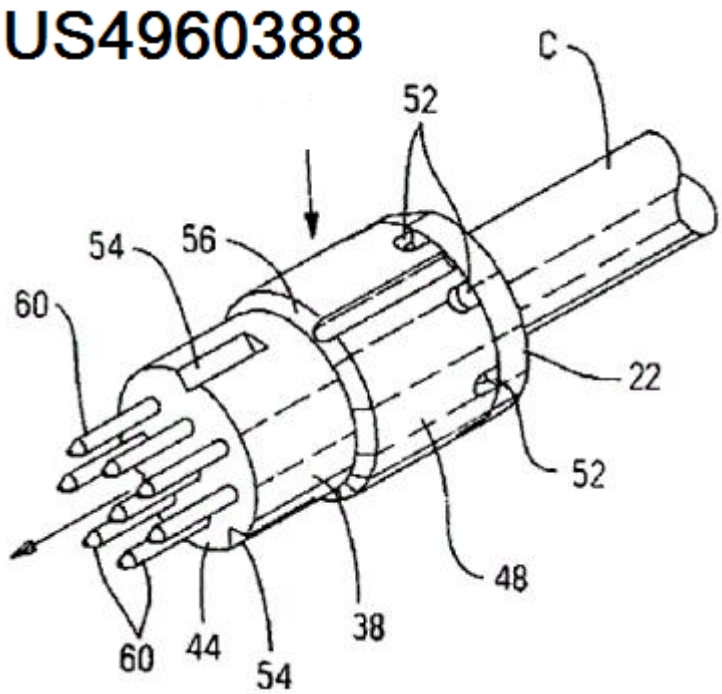

H01R 25/00

Coupling parts adapted for simultaneous co-operation with two or more identical counterparts, e.g. for distributing energy to two or more circuits (supported only by co-operation with a counterpart H01R 31/00; with a holder adapted for supporting apparatus to which its counterpart is attached H01R 33/88)

Definition statement

This place covers:

Coupling parts for multiple or alternative co-operation withidentical counterparts

References

Limiting references

This place does not cover:

Supported only by co-operation with a counterpart	H01R 31/00
With a holder adapted for supporting apparatus to which its counterpart is attached	H01R 33/88

H01R 25/003

{the coupling part being secured only to wires or cables}

Definition statement

This place covers:

Illustrative example of subject matter classified in H01R 25/003

US4657330

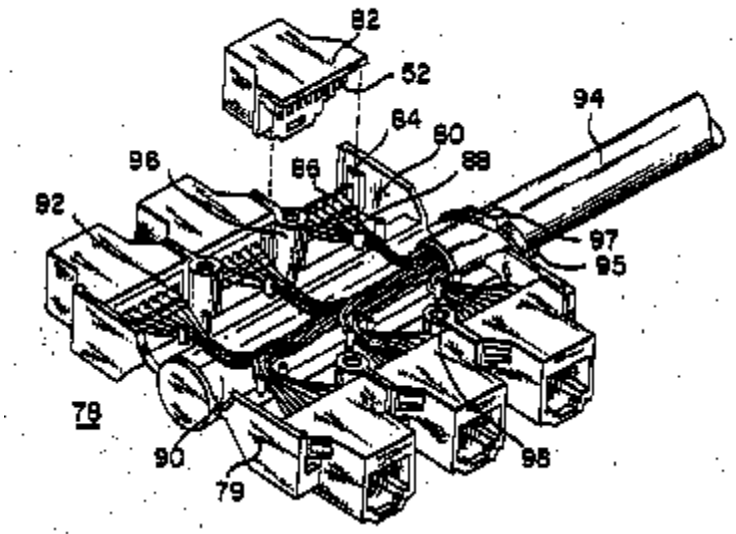

EP1376771

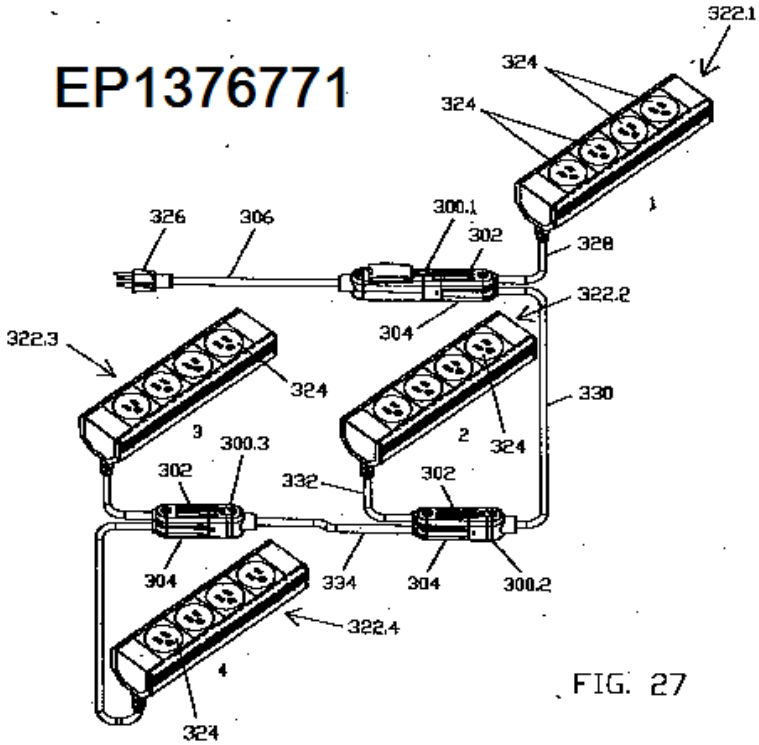

FIG. 27

H01R 25/006

{the coupling part being secured to apparatus or structure, e.g. duplex wall receptacle}

Definition statement

This place covers:

Illustrative example of subject matter classified in H01R 25/006

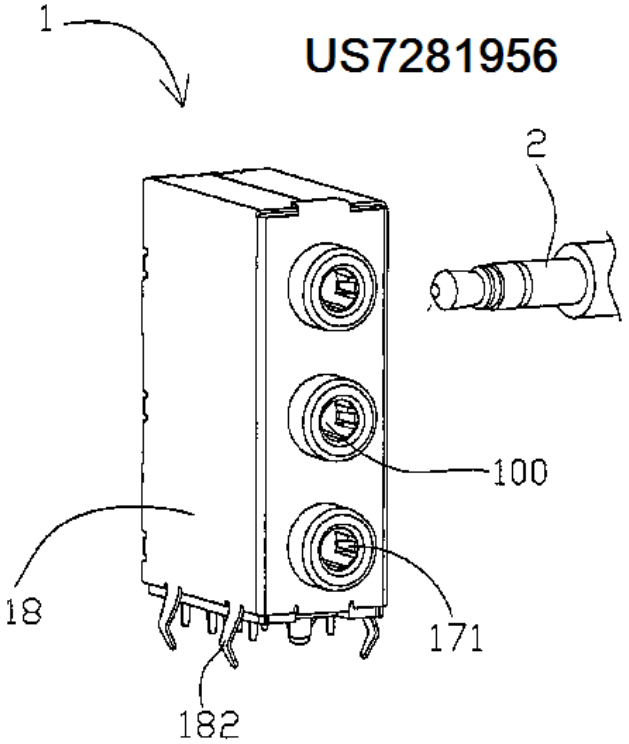

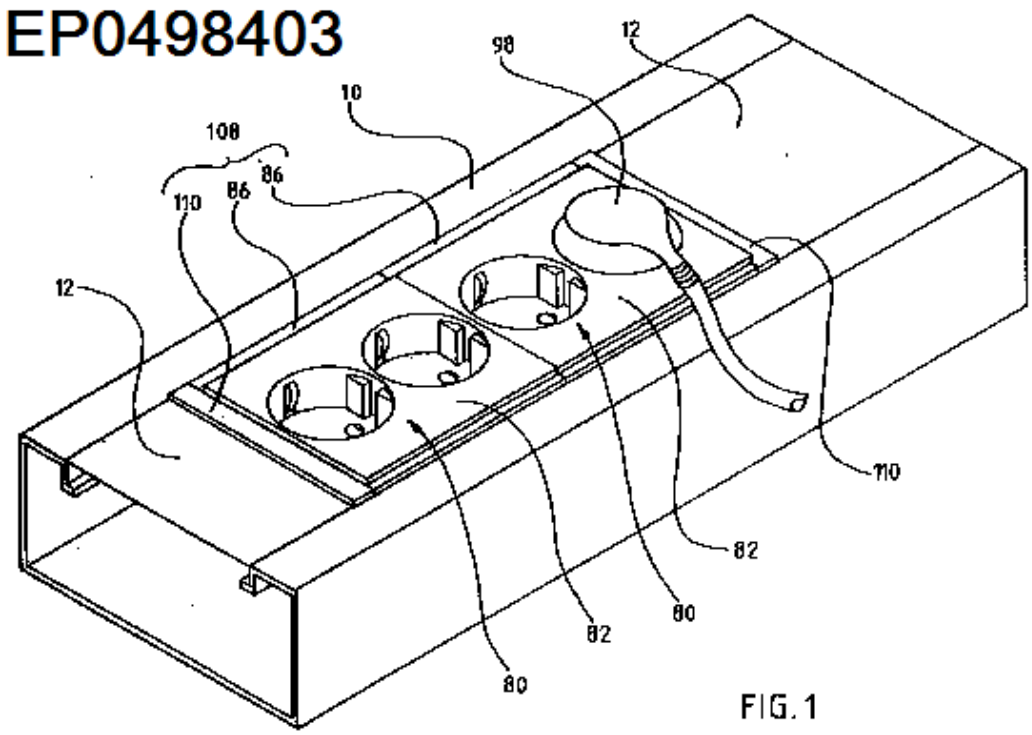

H01R 25/14

Rails or bus-bars constructed so that the counterparts can be connected thereto at any point along their length, {e.g. track lighting systems} (installation of bus bars H02G 5/00)

Definition statement

This place covers:

Illustrative example of subject matter classified in H01R 25/14

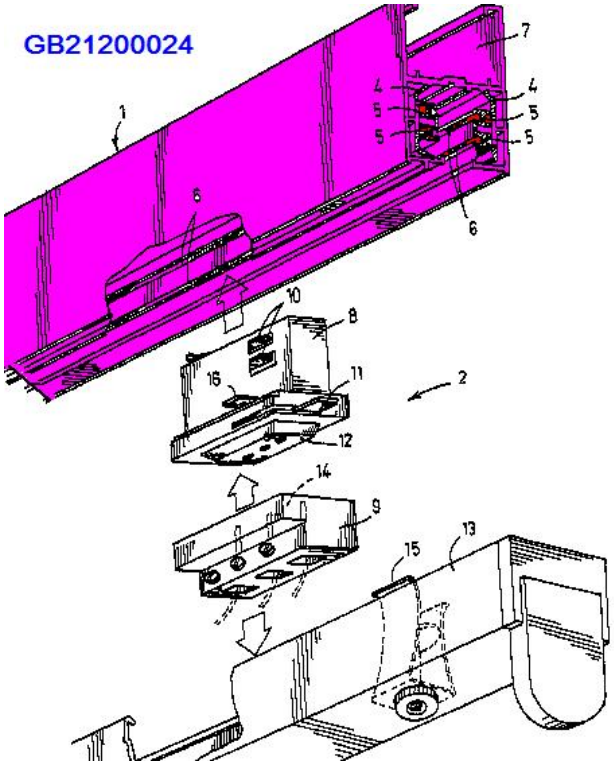

References

Informative references

Attention is drawn to the following places, which may be of interest for search:

Installation of bus bars	H02G 5/00

H01R 25/142

{Their counterparts}

Definition statement

This place covers:

Illustrative example of subject matter classified in H01R 25/142

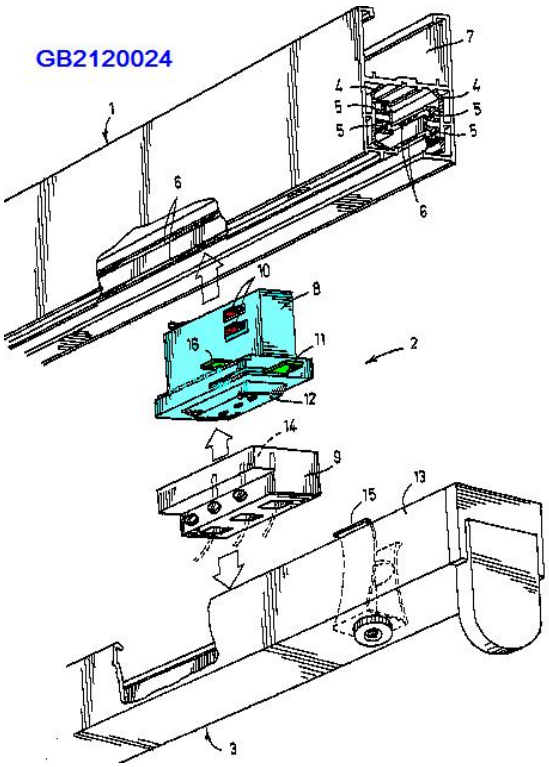

H01R 25/145

{Details, e.g. end pieces or joints (H01R 25/147 takes precedence)}

References

Limiting references

This place does not cover:

Low voltage devices	H01R 25/147

H01R 25/16

Rails or bus-bars provided with a plurality of discrete connecting locations for counterparts {(protective tubings or conduits H02G 3/00; installations of bus-bars H02G 5/00)}

References

Informative references

Attention is drawn to the following places, which may be of interest for search:

Protective tubings or conduits	H02G 3/00;
Installation of bus bars	H02G 5/00

H01R 25/161

{Details}

Definition statement

This place covers:

Illustrative example of subject matter classified in H01R 25/161

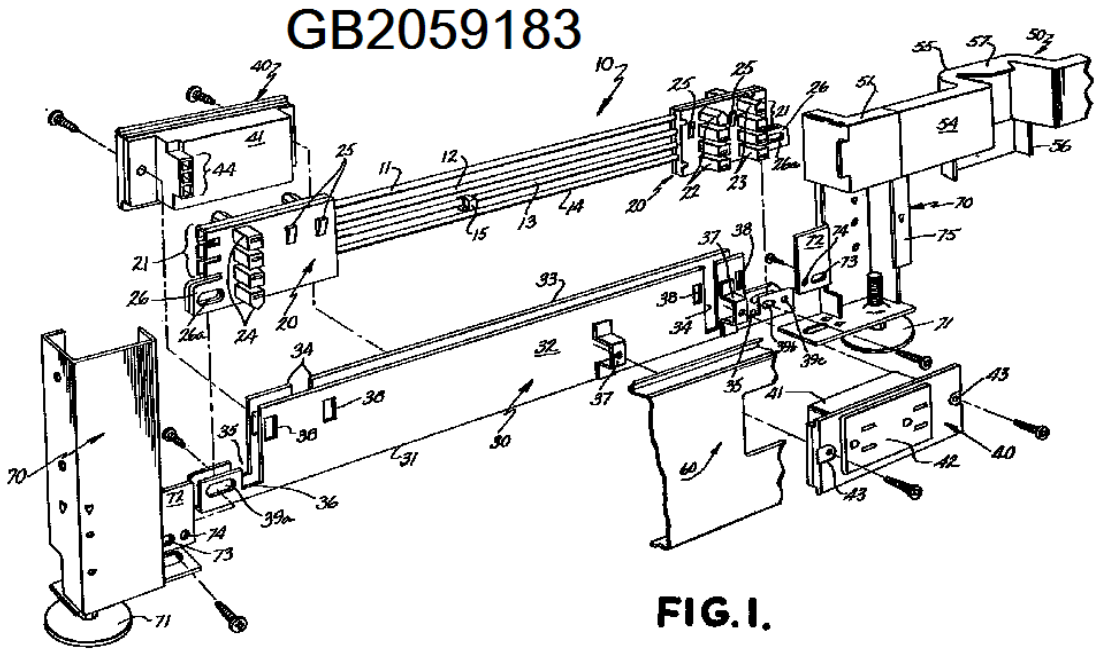

FIG.1.

H01R 25/162

{Electrical connections between or with rails or bus-bars (rails having primarily a non electrical function H01R 4/64)}

Definition statement

This place covers:

Illustrative example of subject matter classified in H01R 25/162

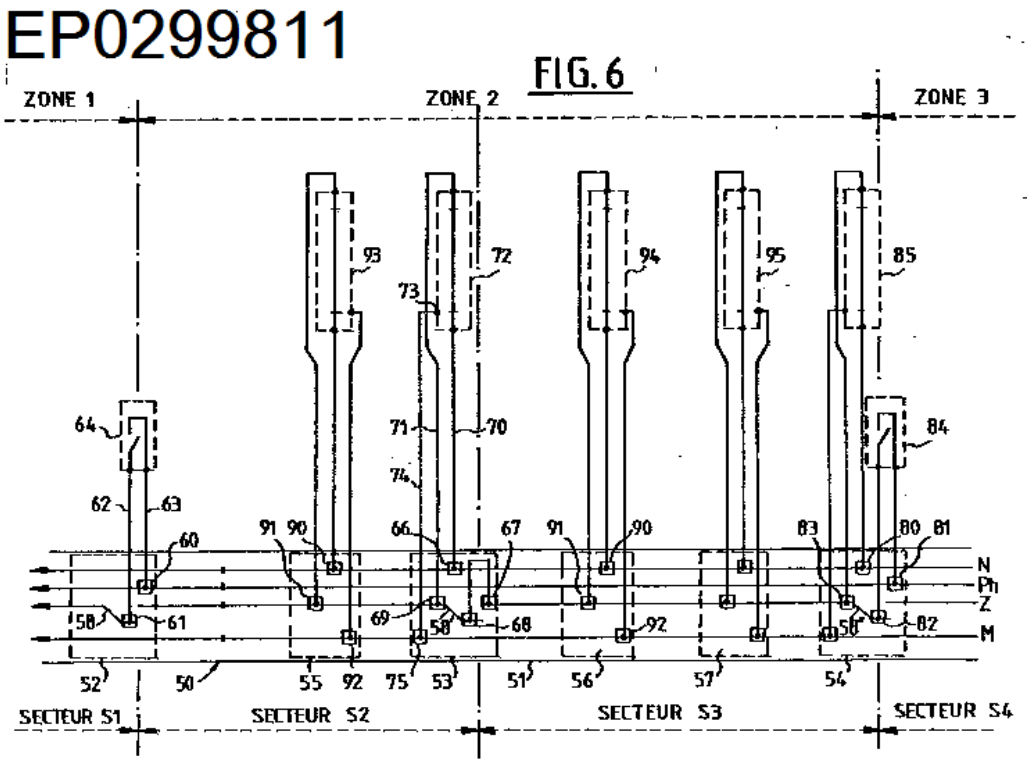

References

Limiting references

This place does not cover:

Rails having primarily a non electrical function	H01R 4/64

H01R 27/00

Coupling parts adapted for co-operation with two or more dissimilar counterparts ({for dissimilar contact members H01R 13/35}; supported only by co-operation with a counterpart H01R 31/00; with a holder adapted for supporting apparatus to which its counterpart is attached H01R 33/90)

Definition statement

This place covers:

Coupling parts for multiple or alternative co-operation with non-identical counterparts

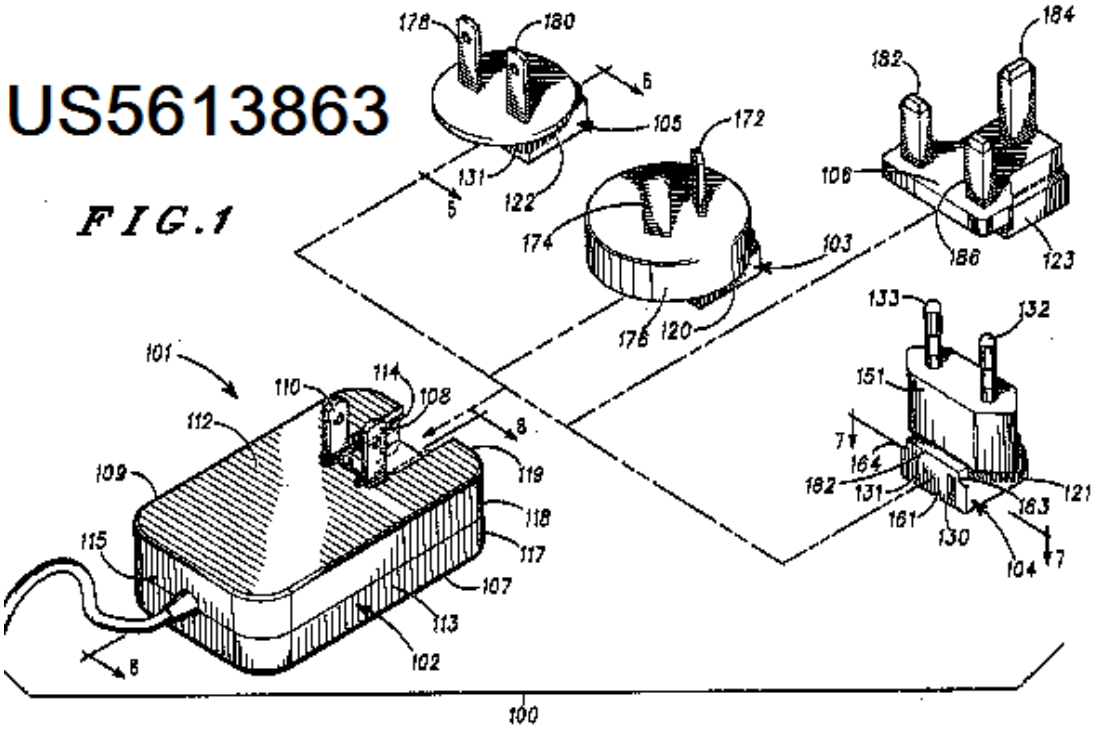

References

Limiting references

This place does not cover:

For dissimilar contact members	H01R 13/35;
Supported only by co-operation with a counterpart	H01R 31/00
With a holder adapted for supporting apparatus to which its counterpart is attached	H01R 33/90

H01R 27/02

for simultaneous co-operation with two or more {dissimilar} counterparts

Definition statement

This place covers:

Illustrative example of subject matter classified in H01R 27/02

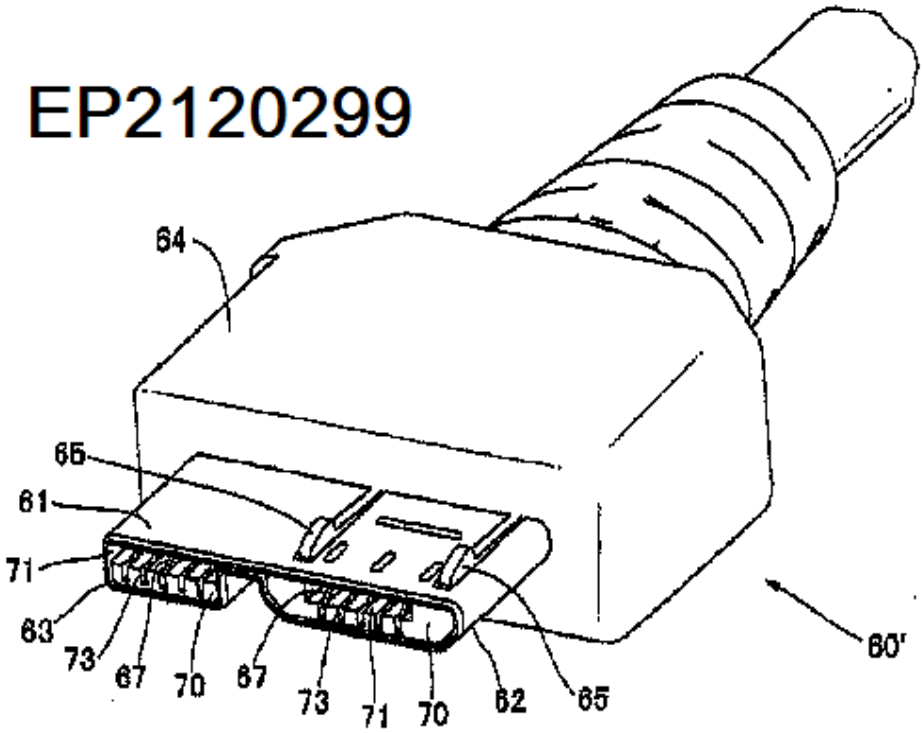

H01R 29/00

Coupling parts for selective co-operation with a counterpart in different ways to establish different circuits, e.g. for voltage selection, for series-parallel selection, {programmable connectors}

Definition statement

This place covers:

Illustrative example of subject matter classified in H01R 29/00

e.g.: Programmable plugs/sockets;

Plug/socket comprising a fixed wiring pattern insertable in a counterpart.

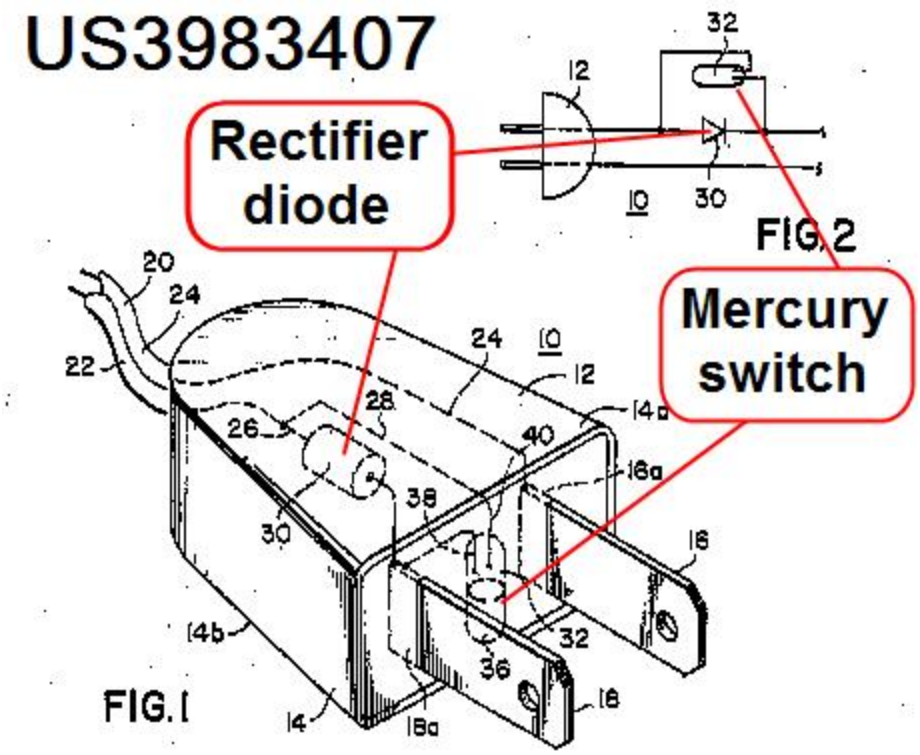

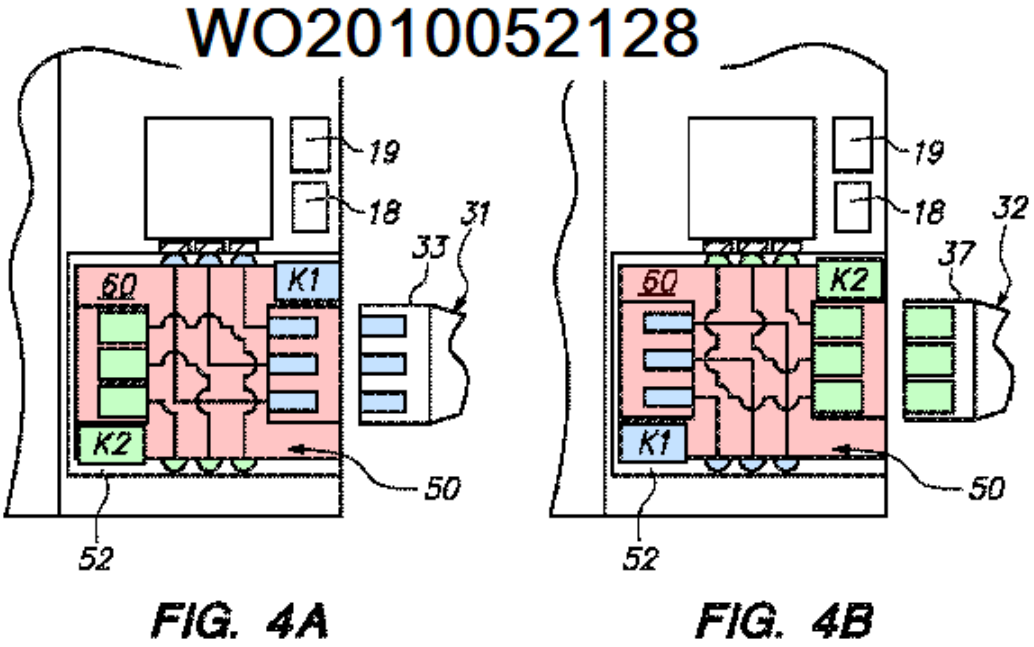

H01R 31/00

Coupling parts supported only by co-operation with counterpart

Definition statement

This place covers:

Linking part forming an intermediate coupling mean between the two parts of coupling devices.

H01R 31/02

Intermediate parts for distributing energy to two or more circuits in parallel, e.g. splitter (for linking coupling parts that cannot co-operated H01R 31/06; with a holder adapted for supporting apparatus to which its counterpart is attached H01R 33/92)

Definition statement

This place covers:

Illustrative example of subject matter classified in H01R 31/02

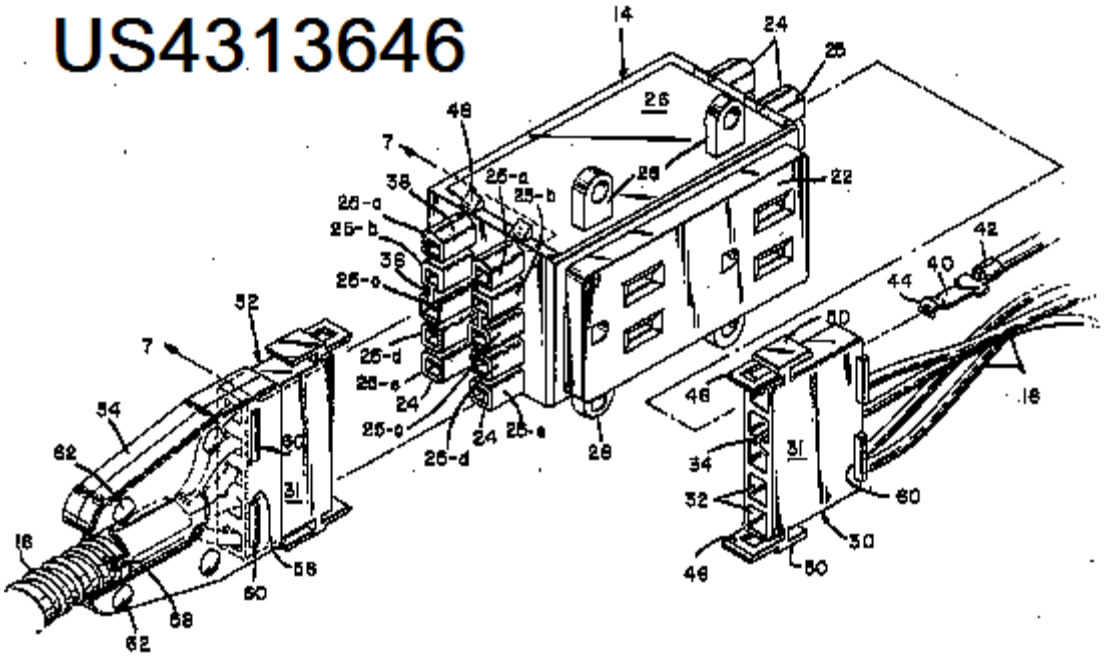

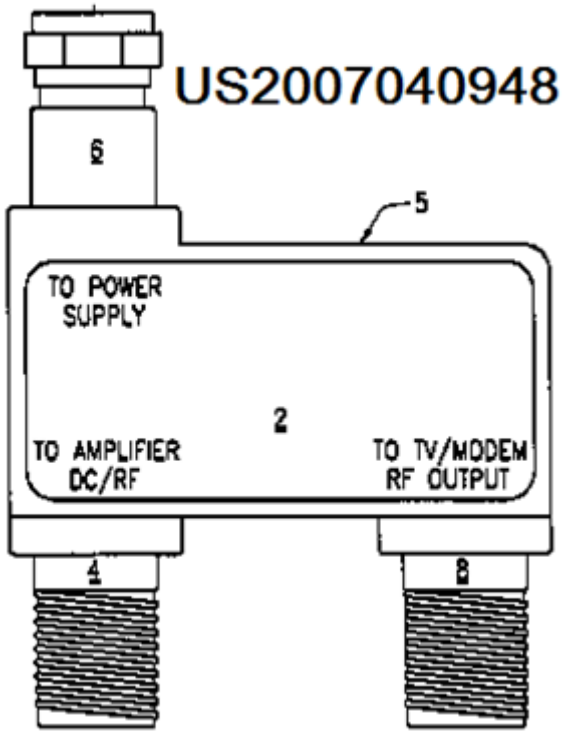

References

Limiting references

This place does not cover:

For linking coupling parts that cannot co-operate	H01R 31/06
With a holder adapted for supporting apparatus to which its counterpart is attached	H01R 33/92

H01R 31/06

Intermediate parts for linking two coupling parts, e.g. adapter (with a holder adapted for supporting apparatus to which its counterpart is attached H01R 33/94)

Definition statement

This place covers:

Illustrative example of subject matter classified in H01R 31/06

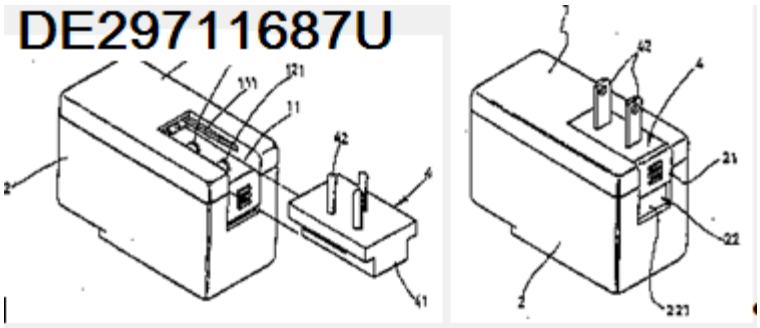

References

Limiting references

This place does not cover:

With a holder adapted for supporting apparatus to which its counterpart is attached	H01R 33/94

H01R 31/065

{with built-in electric apparatus}

Definition statement

This place covers:

Illustrative example of subject matter classified in H01R 31/065

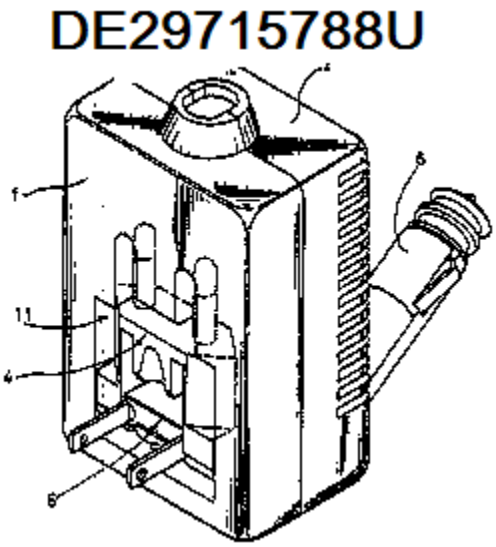

H01R 31/08

Short circuiting members for bridging contacts in a counterpart (insulating members for separating contacts in a counterpart H01H 27/04)

Definition statement

This place covers:

Illustrative example of subject matter classified in H01R 31/08

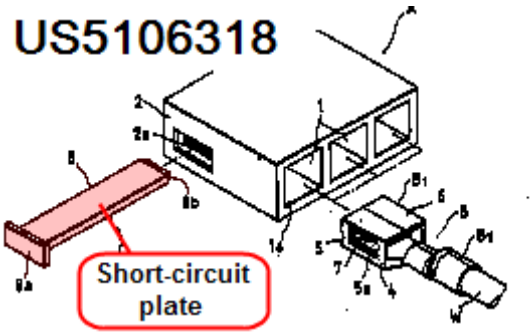

References

Limiting references

This place does not cover:

Insulating members for separating contacts in a counterpart	H01H 27/04

H01R 31/085

{Short circuiting bus-strips}

Definition statement

This place covers:

Illustrative example of subject matter classified in H01R 31/085

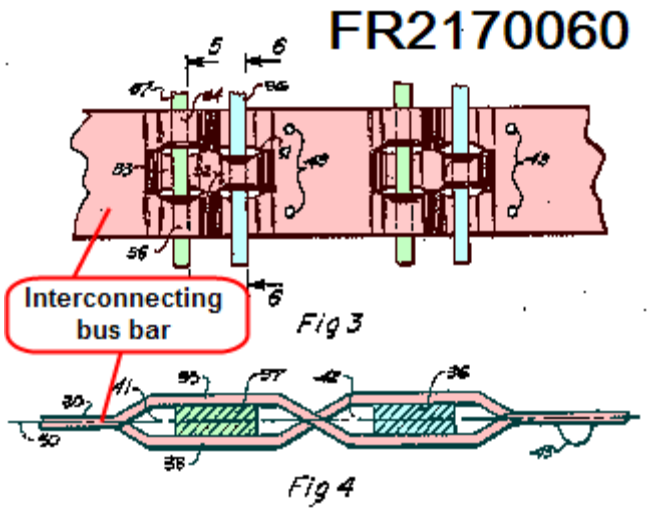

H01R 33/00

Coupling devices in which a holder is adapted for supporting apparatus to which its counterpart is attached; Separate parts thereof (structural association of counterpart with specific apparatus, see the relevant subclass for the apparatus)

Definition statement

This place covers:

Coupling devices specially adapted for supporting, holding and electrically connecting with an apparatus.

H01R 33/08

for supporting tubular fluorescent lamp

Definition statement

This place covers:

Illustrative example of subject matter classified in H01R 33/08

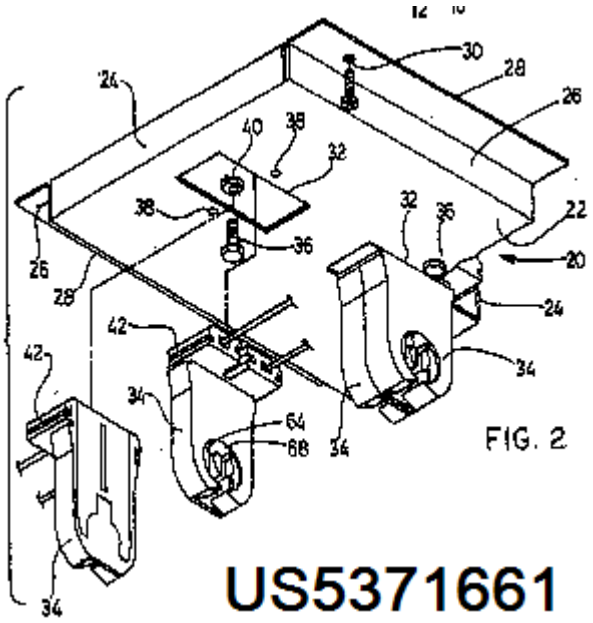

H01R 33/089

{integral with starter holding structure (H01R 33/065 for starters only)}

References

Limiting references

This place does not cover:

For starters only	H01R 33/065

H01R 33/09

for baseless lamp bulb

Definition statement

This place covers:

Illustrative example of subject matter classified in H01R 33/09

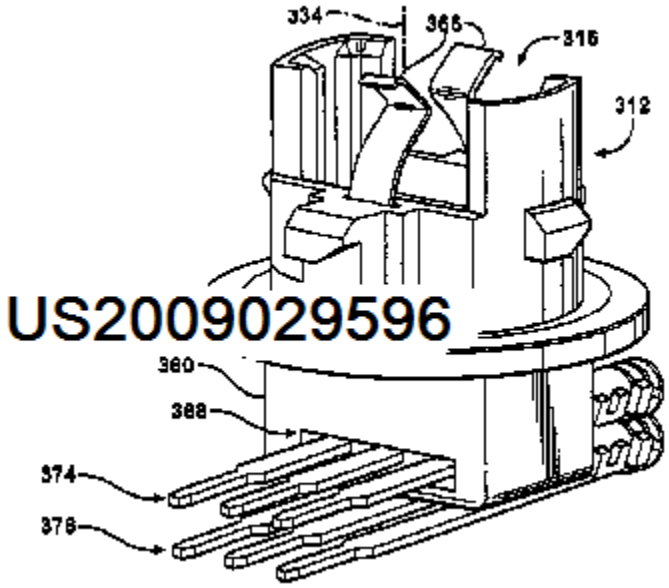

H01R 33/18

having only abutting contacts

Definition statement

This place covers:

Illustrative example of subject matter classified in H01R 33/18

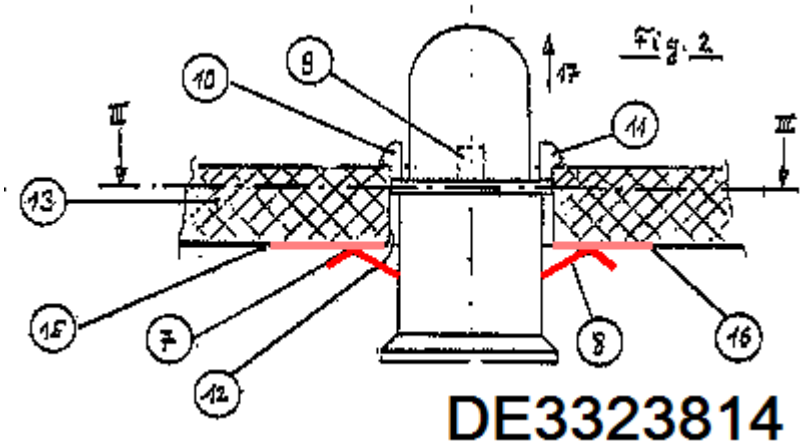

H01R 33/20

having concentrically or coaxially arranged contacts

Definition statement

This place covers:

Illustrative example of subject matter classified in H01R 33/20

WO9715940

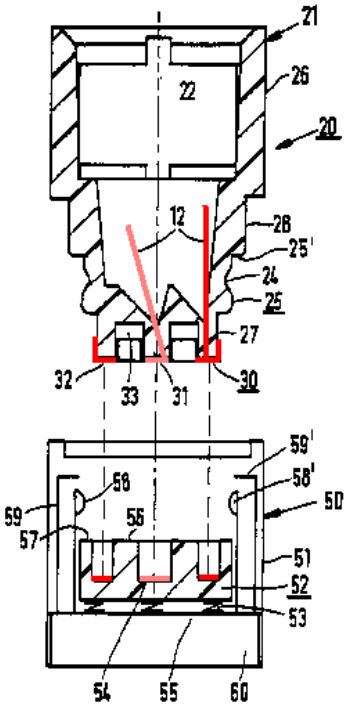

H01R 33/22

for screw type base, e.g. for lamp

Definition statement

This place covers:

Illustrative example of subject matter classified in H01R 33/22

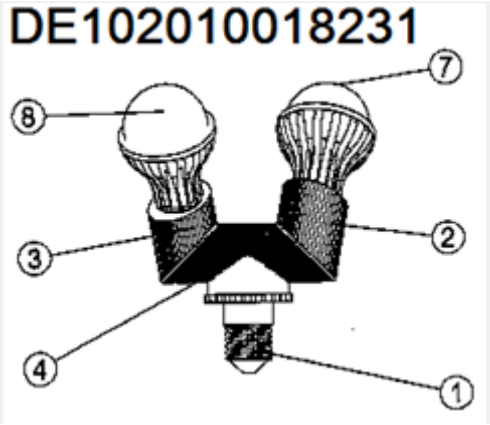

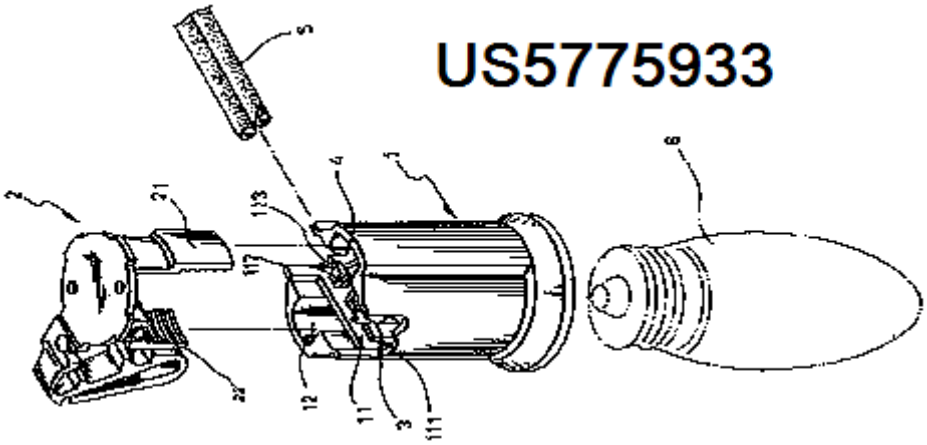

H01R 33/46

for bayonet type base

Definition statement

This place covers:

Illustrative example of subject matter classified in H01R 33/46

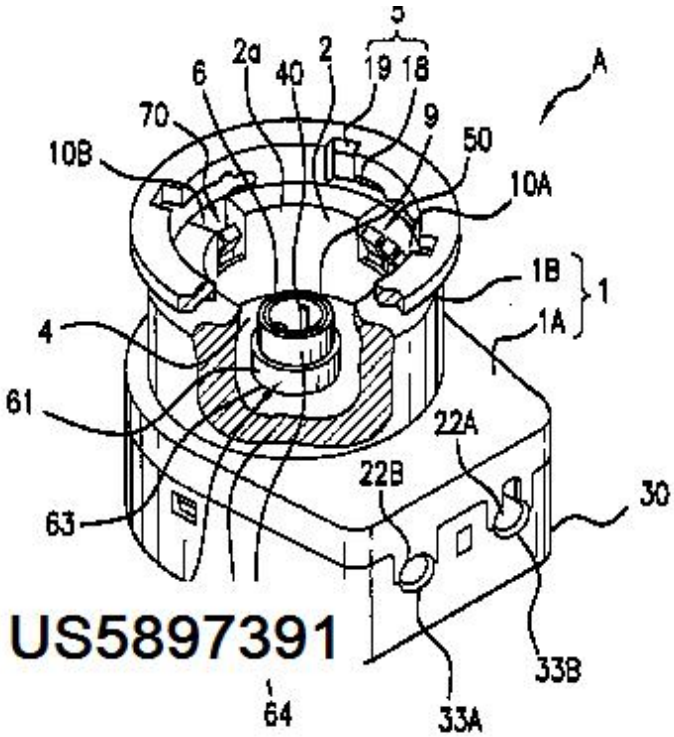

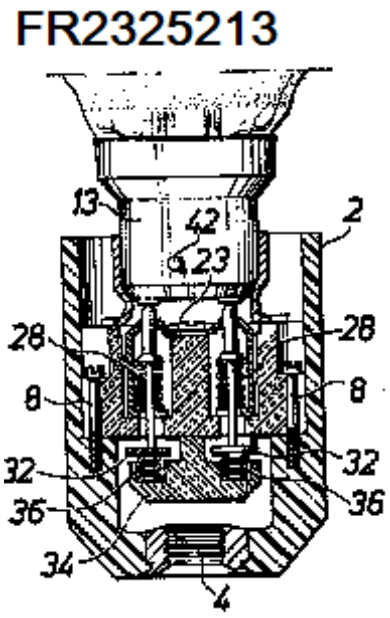

H01R 33/72

Three-pole devices

Definition statement

This place covers:

Illustrative example of subject matter classified in H01R 33/72

EP0898342

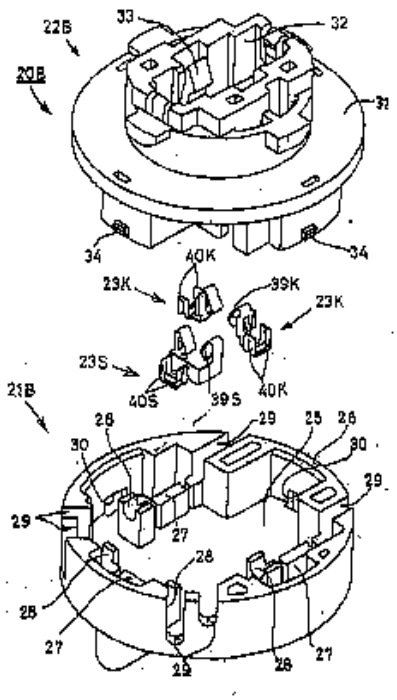

WO2008120910

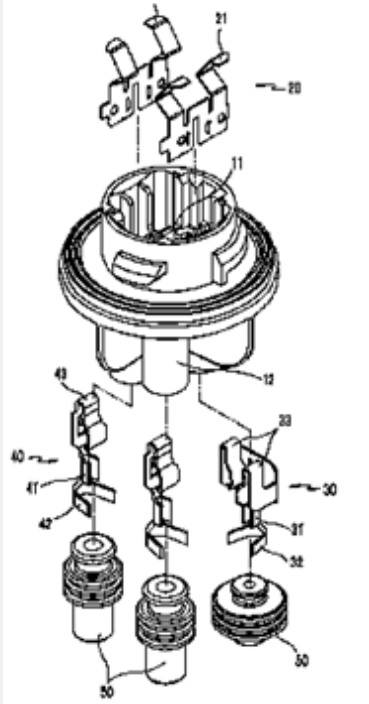

H01R 33/74

Devices having four or more poles, {e.g. holders for compact fluorescent lamps}

Definition statement

This place covers:

Illustrative example of subject matter classified in H01R 33/74

DE1230921

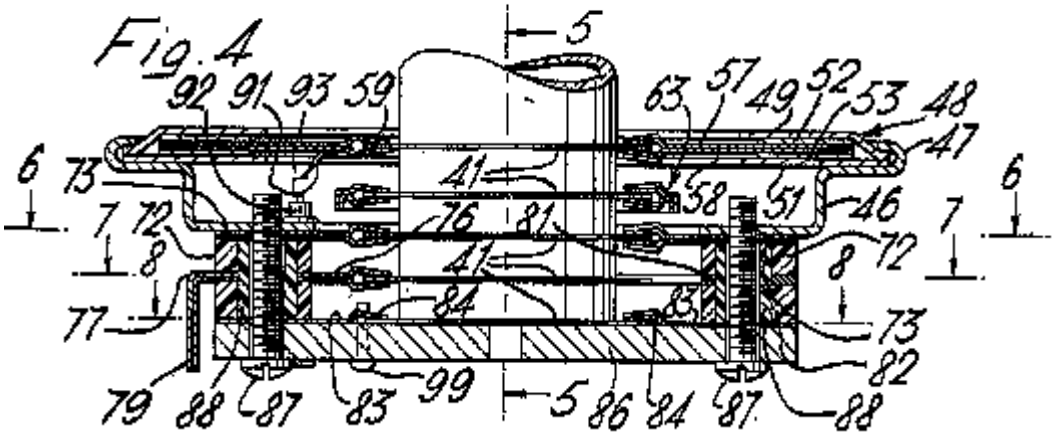

H01R 33/7621

{the wires being connected using screw, clamp, wrap or spring connection}

Definition statement

This place covers:

Illustrative example of subject matter classified in H01R 33/7621

DE807639

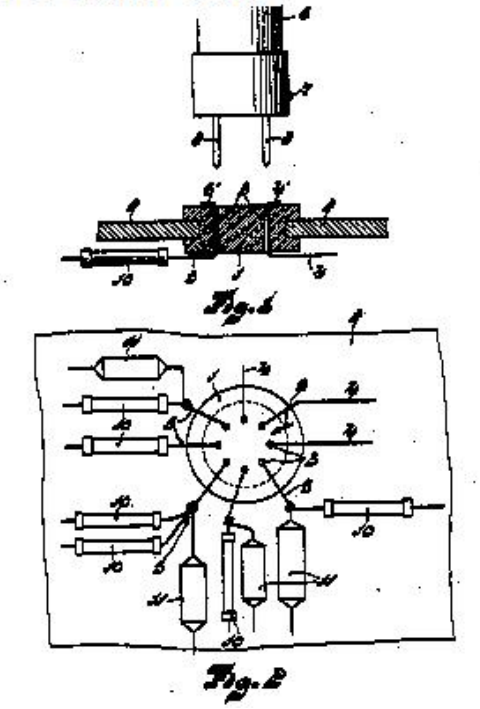

EP1918633

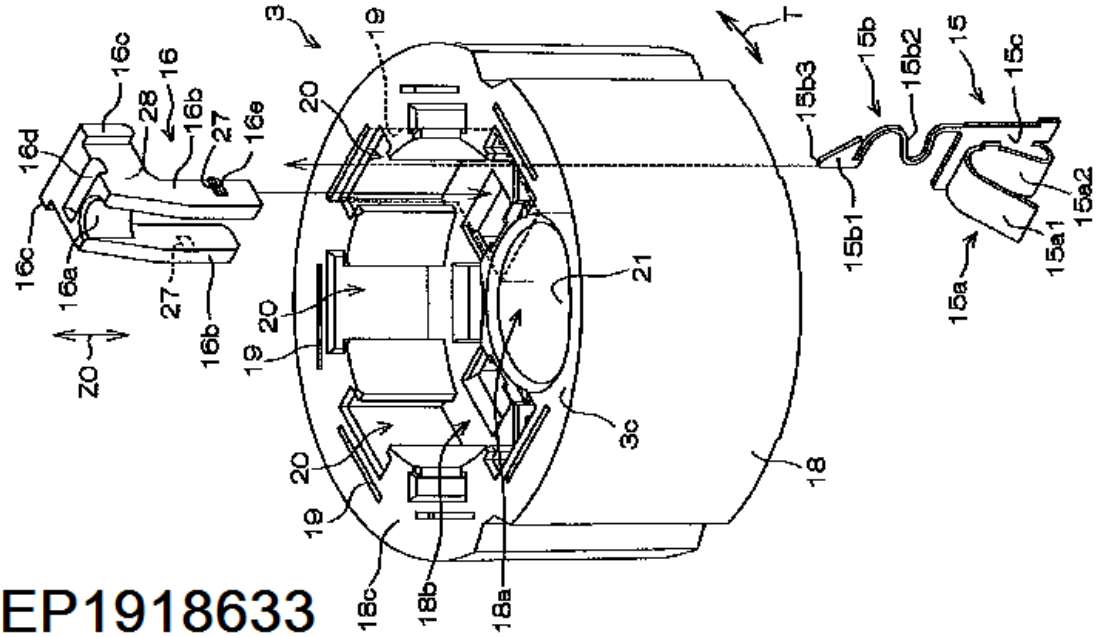

H01R 33/7635

{the terminals being collectively connected, e.g. to a PCB}

Definition statement

This place covers:

Illustrative example of subject matter classified in H01R 33/7635

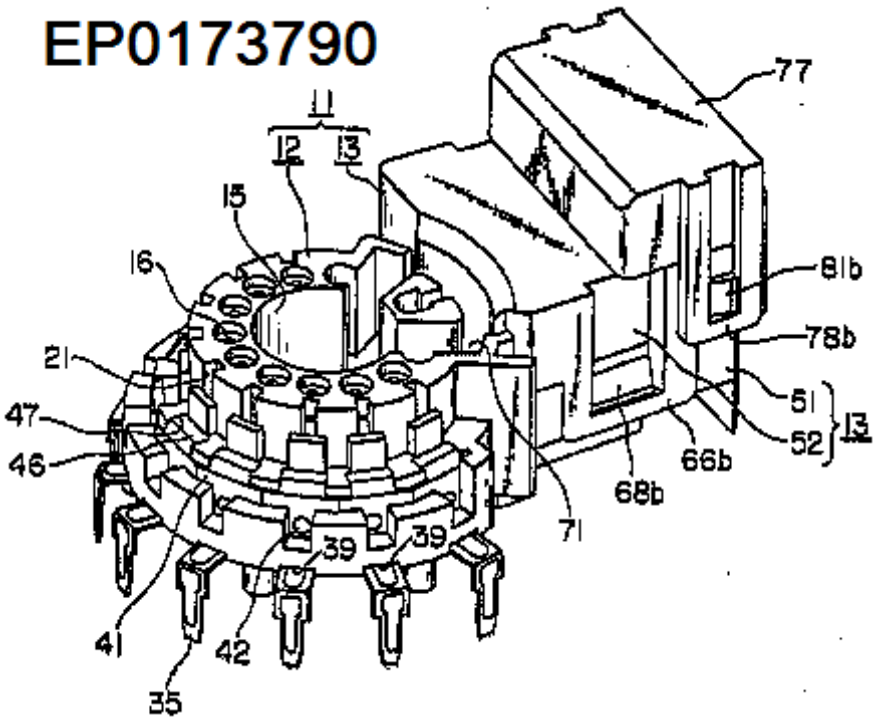

H01R 33/7692

{for supporting a tubular fluorescent lamp (for two-pole devices H01R 33/06)}

References

Limiting references

This place does not cover:

For two-pole devices	H01R 33/06

H01R 33/88

adapted for simultaneous co-operation with two or more identical counterparts

Definition statement

This place covers:

Illustrative example of subject matter classified in H01R 33/88

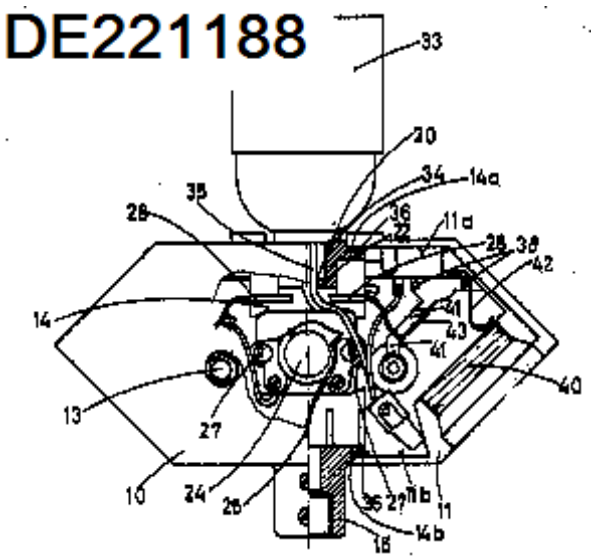

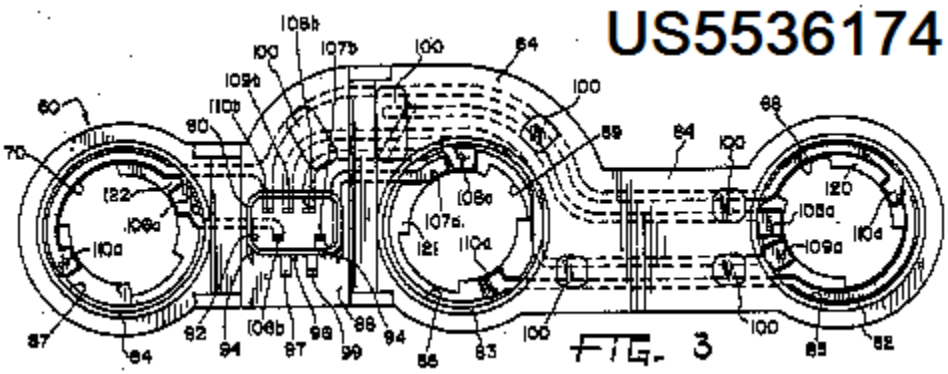

H01R 33/90

adapted for co-operation with two or more dissimilar counterparts

Definition statement

This place covers:

Illustrative example of subject matter classified in H01R 33/90

GB2214364

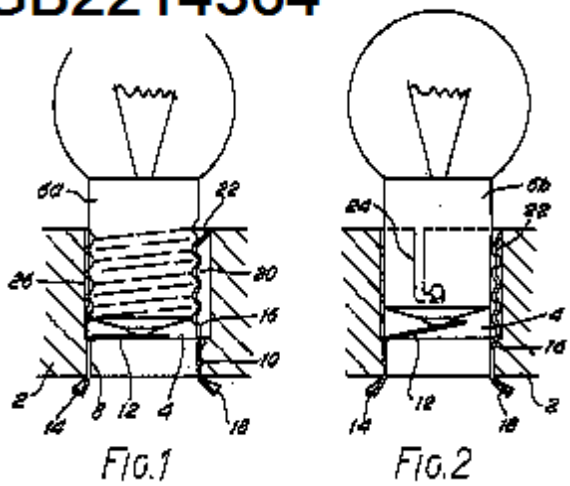

GB2331405

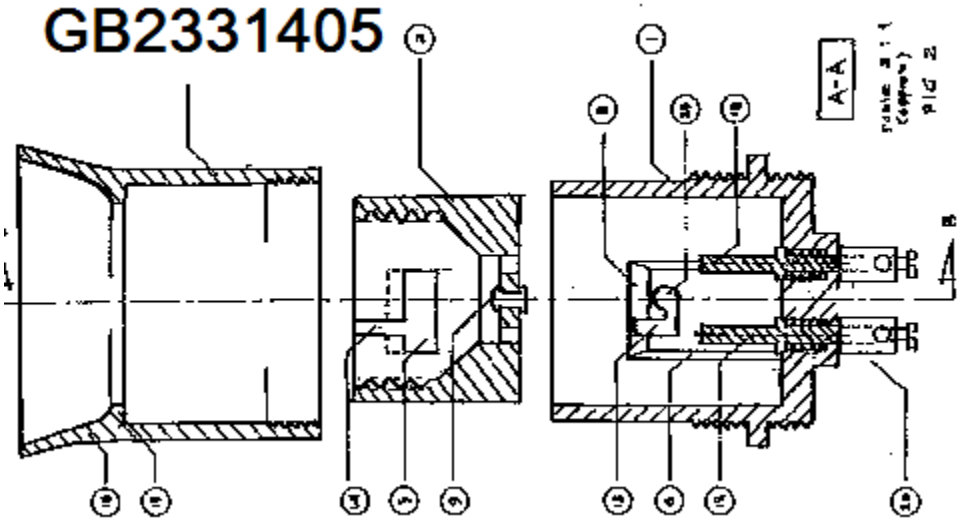

H01R 33/92

Holders formed as intermediate parts for distributing energy in parallel through two or more counterparts at least one of which is attached to apparatus to be held

Definition statement

This place covers:

Illustrative example of subject matter classified in H01R 33/92

GB407319

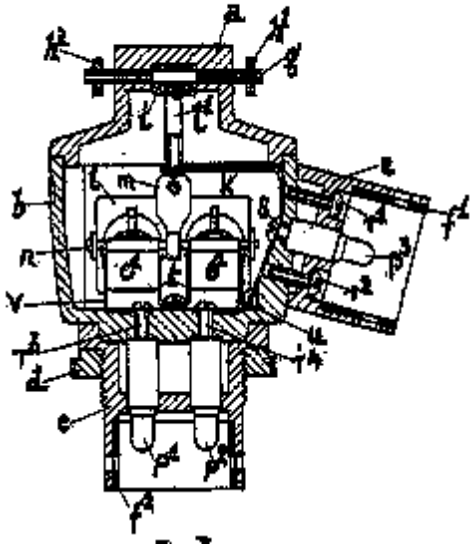

H01R 33/94

Holders formed as intermediate parts for linking a counter-part to a coupling part

Definition statement

This place covers:

Illustrative example of subject matter classified in H01R 33/94

US1476982

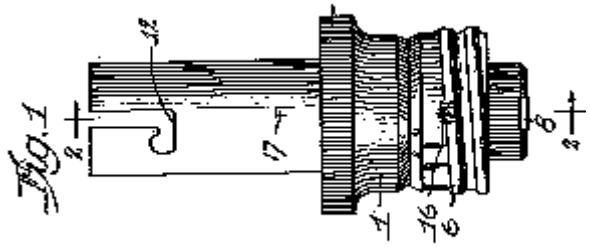

H01R 33/942

{for tubular fluorescent lamps}

Definition statement

This place covers:

Illustrative example of subject matter classified in H01R 33/942

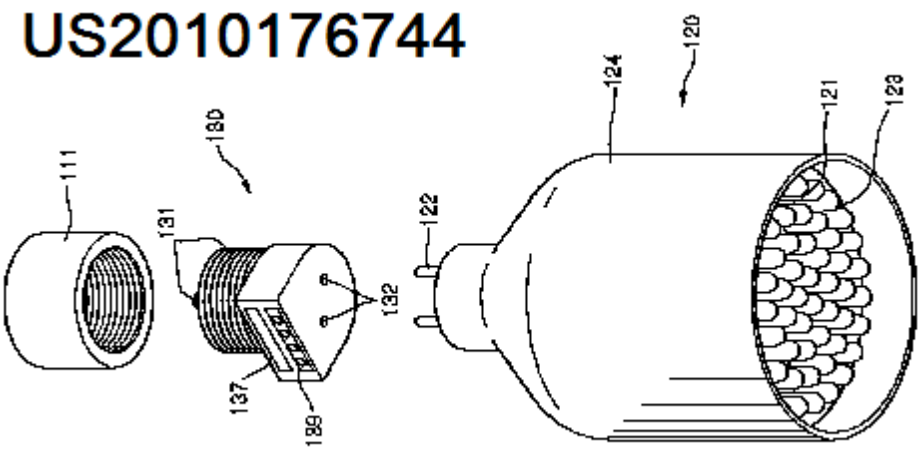

H01R 33/945

Holders with built-in electrical component

Definition statement

This place covers:

Illustrative example of subject matter classified in H01R 33/945

WO2008001078

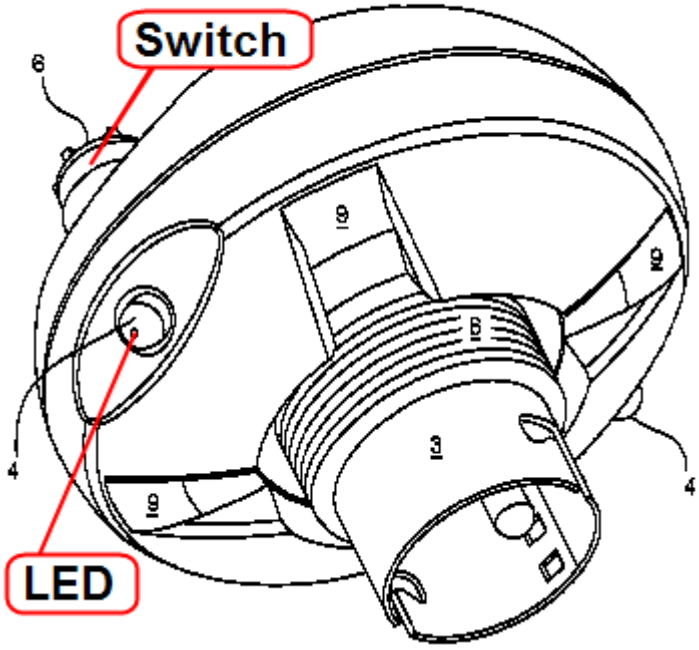

H01R 33/9453

{for screw type coupling devices}

Definition statement

This place covers:

Illustrative example of subject matter classified in H01R 33/9453

DE19541438

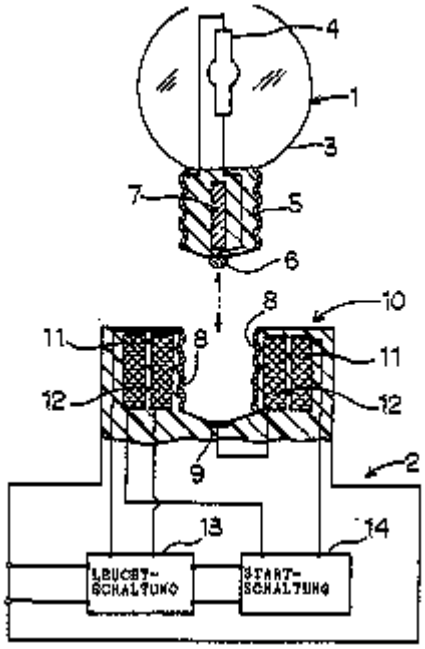

H01R 33/9456

{for bayonet type coupling devices}

Definition statement

This place covers:

Illustrative example of subject matter classified in H01R 33/9456

GB2059690

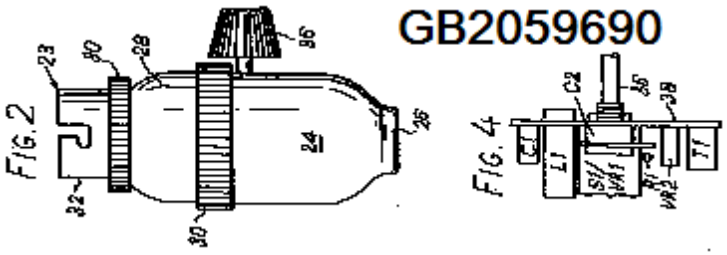

with fuse; with thermal switch

H01R 33/95

with fuse; with thermal switch

Definition statement

This place covers:

Illustrative example of subject matter classified in H01R 33/95

US1861159

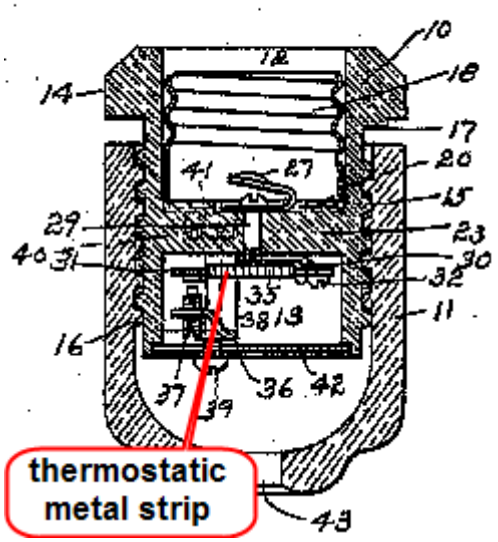

H01R 33/9555

{for screw type coupling devices}

Definition statement

This place covers:

Illustrative example of subject matter classified in H01R 33/9555

US1608118

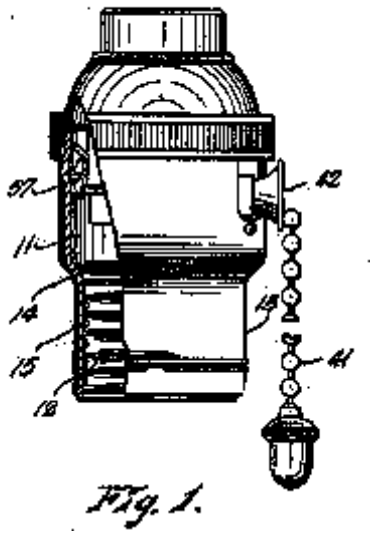

H01R 33/962

{for screw type coupling devices}

Definition statement

This place covers:

Illustrative example of subject matter classified in H01R 33/962

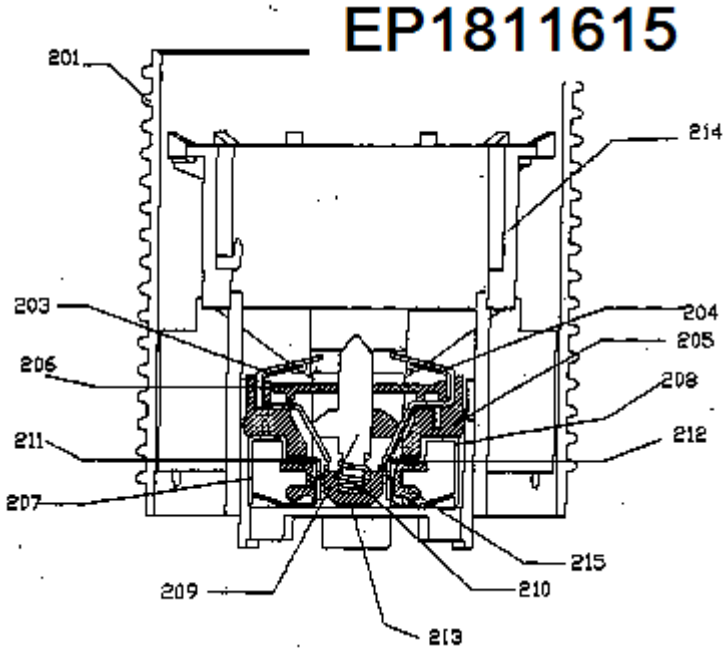

H01R 33/965

Dustproof, splashproof, drip-proof, waterproof, or flameproof holders

Definition statement

This place covers:

Illustrative example of subject matter classified in H01R 33/965

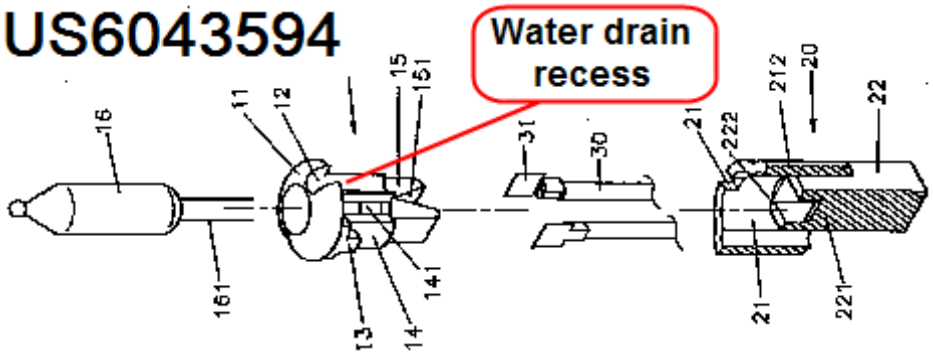

H01R 33/9658

{for tubular fluorescent lamps}

Definition statement

This place covers:

Illustrative example of subject matter classified in H01R 33/9658

EP1895626

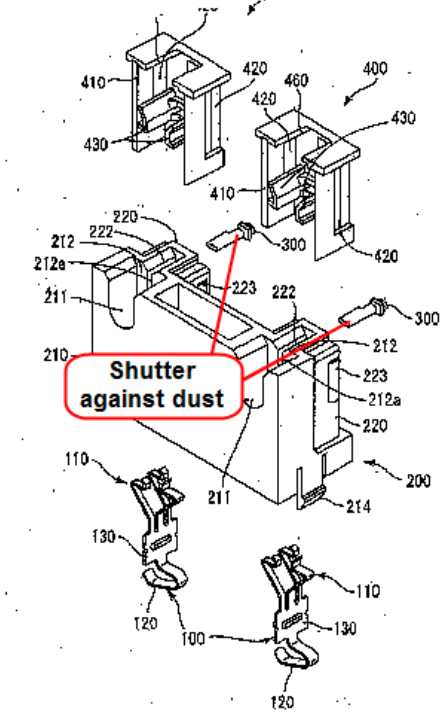

H01R 33/97

Holders with separate means to prevent loosening of the coupling or unauthorized removal of apparatus held

Definition statement

This place covers:

Illustrative example of subject matter classified in H01R 33/97

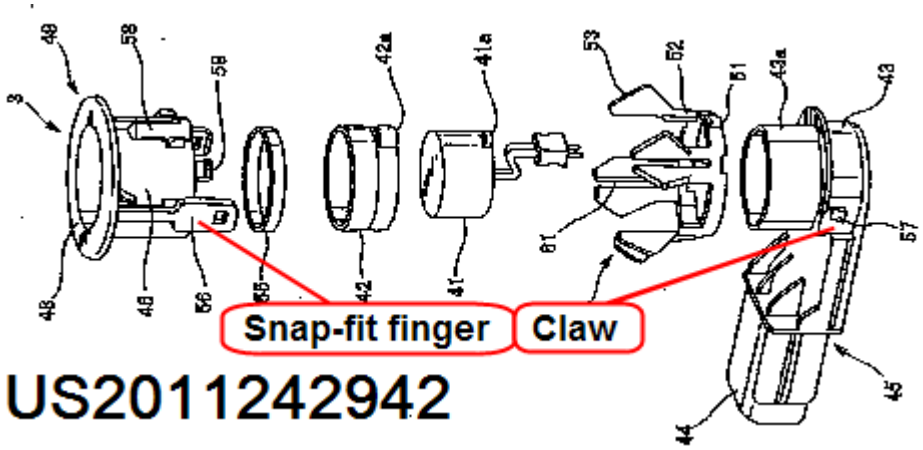

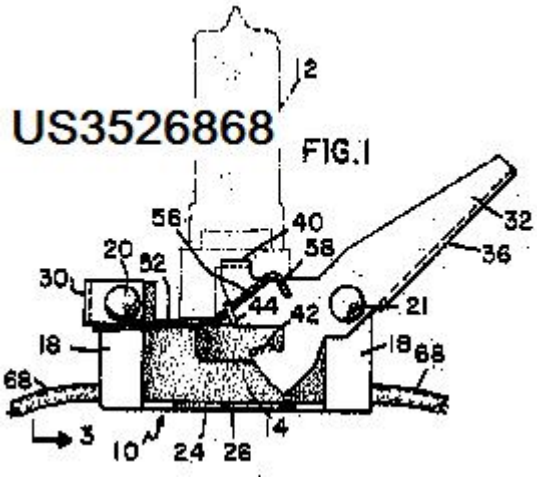

H01R 33/971

{for screw type coupling devices}

Definition statement

This place covers:

Illustrative example of subject matter classified in H01R 33/971

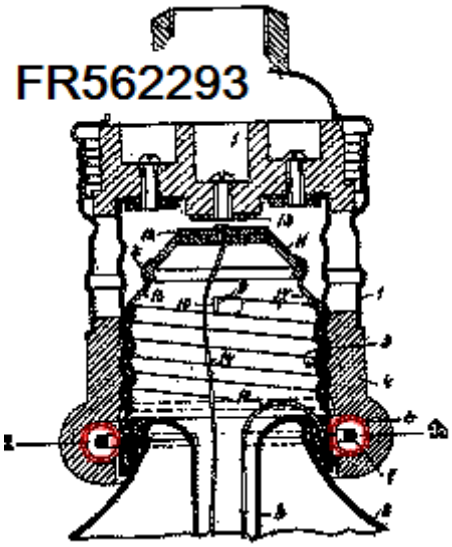

H01R 33/975

Holders with resilient means for protecting apparatus against vibrations or shocks

Definition statement

This place covers:

Illustrative example of subject matter classified in H01R 33/975

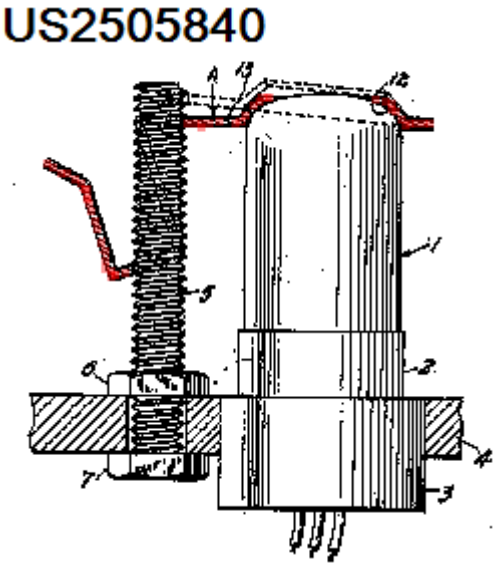

H01R 33/9756

{for bayonet type coupling devices}

Definition statement

This place covers:

Illustrative example of subject matter classified in H01R 33/9756

US2941182

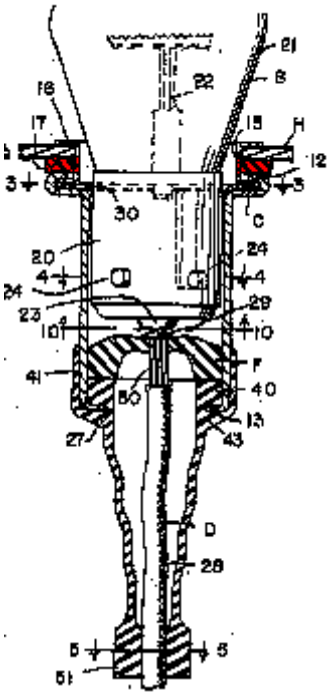

H01R 35/00

Flexible or turnable line connectors, {i.e. the rotation angle being limited} (rotary current collectors, distributors H01R 39/00; {arrangement of these connectors in vehicle steering wheels B60R 16/027; arrangements of electric cables or lines between relatively movable parts H02G 11/00})

Definition statement

This place covers:

Rotary coupling devices allowing limited motion between the moving and the stationary parts.

References

Limiting references

This place does not cover:

Rotary current collectors, distributors	H01R 39/00

Informative references

Attention is drawn to the following places, which may be of interest for search:

Arrangement of these connectors in vehicle steering wheels	B60R 16/027

Arrangements of electric cables or lines between relatively movable parts	H02G 11/00

H01R 35/02

Flexible line connectors {without frictional contact members}

Definition statement

This place covers:

Illustrative example of subject matter classified in H01R 35/02

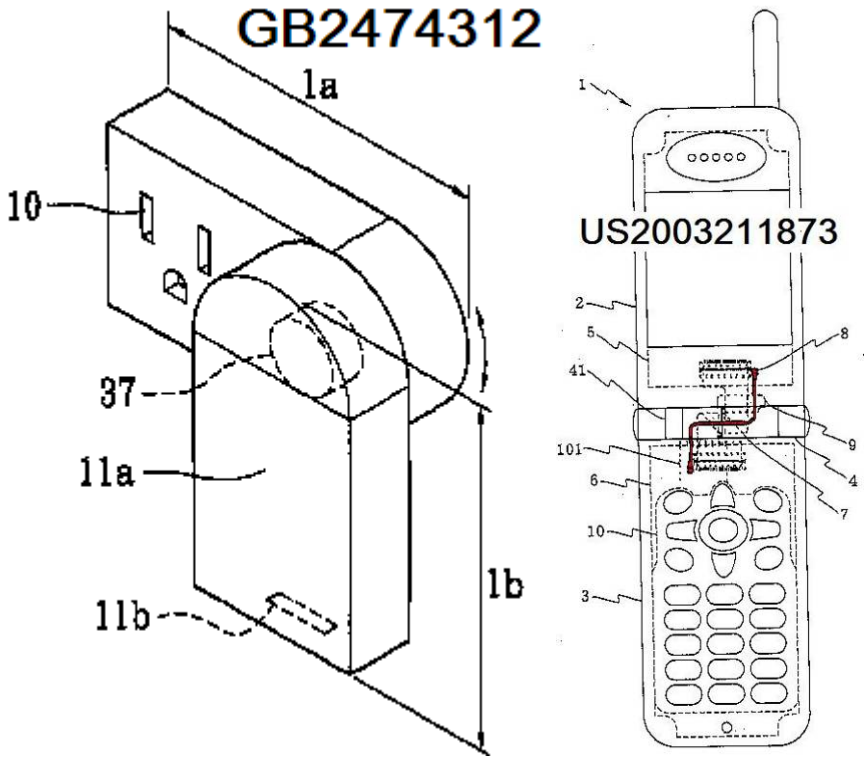

H01R 35/025

{having a flexible conductor wound around a rotation axis}

Definition statement

This place covers:

Illustrative example of subject matter classified in H01R 35/025

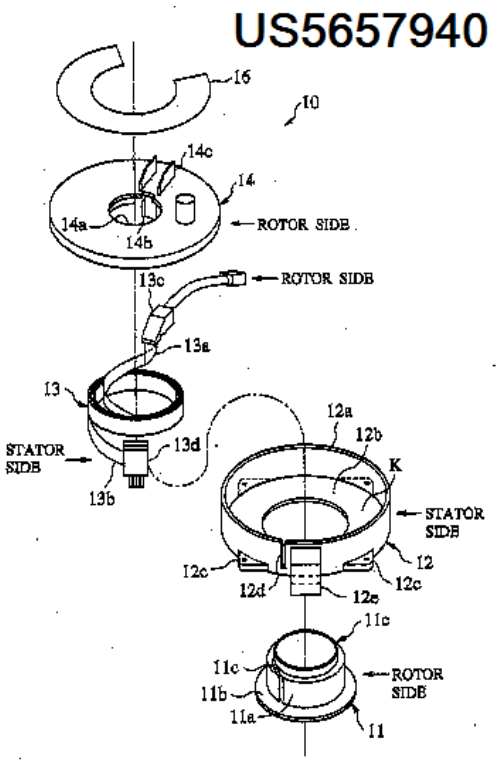

H01R 35/04

Turnable line connectors with limited rotation angle {with frictional contact members}

Definition statement

This place covers:

Illustrative example of subject matter classified in H01R 35/04

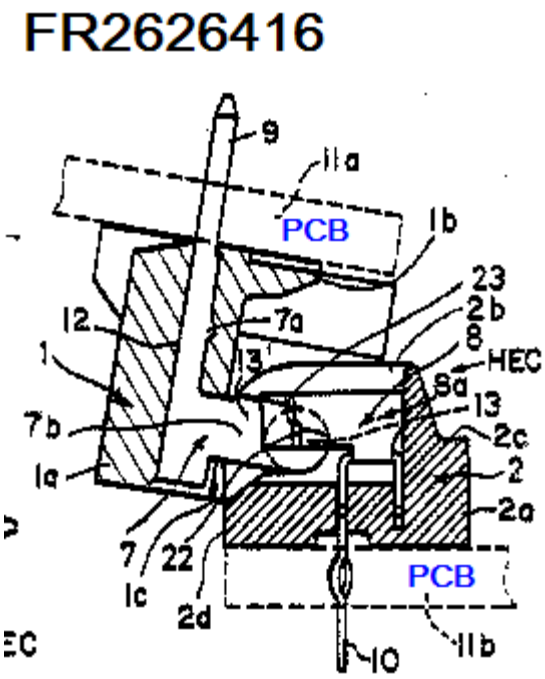

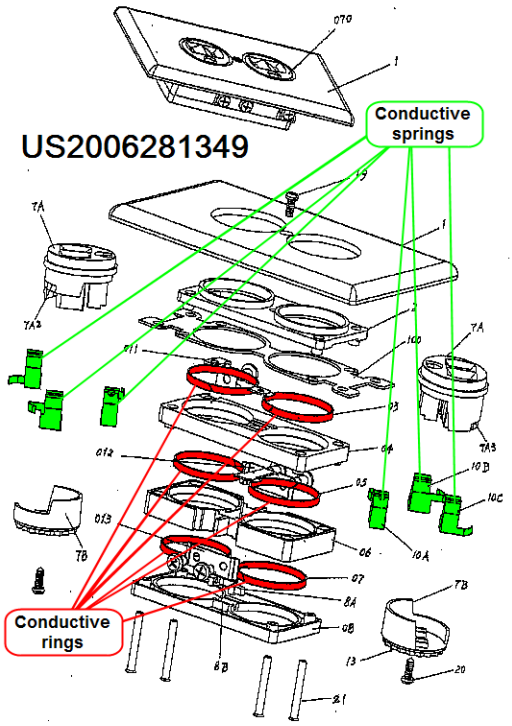

H01R 39/00

Rotary current collectors, distributors, or interrupters (cam-operated switches H01H 19/00; structural association with dynamo-electric machine H02K 13/00)

Definition statement

This place covers:

Turnable connectors with unlimited rotation angle.

References

Informative references

Attention is drawn to the following places, which may be of interest for search:

Cam-operated switches	H01H 19/00
Structural association with dynamo-electric machine	H02K 13/00

H01R 39/02

Details {for dynamo electric machines (for current collectors not particularly for dynamo electric machines H01R 39/60, H01R 39/64)}

References

Limiting references

This place does not cover:

For current collectors not particulary for dynamo electric machines	H01R 39/60, H01R 39/64

H01R 39/025

{Conductive materials}

Definition statement

This place covers:

Illustrative example of subject matter classified in H01R 39/025

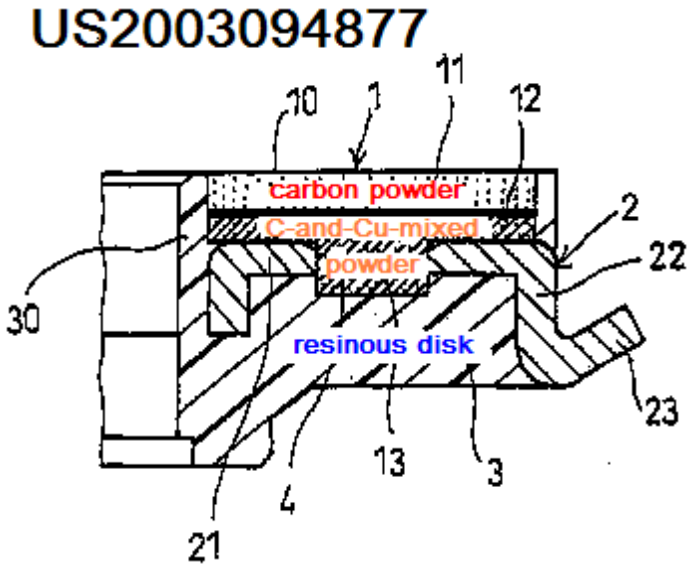

H01R 39/04

Commutators (wherein the segments are formed by extensions of dynamo-electric machine winding H02K)

Definition statement

This place covers:

Illustrative example of subject matter classified in H01R 39/04

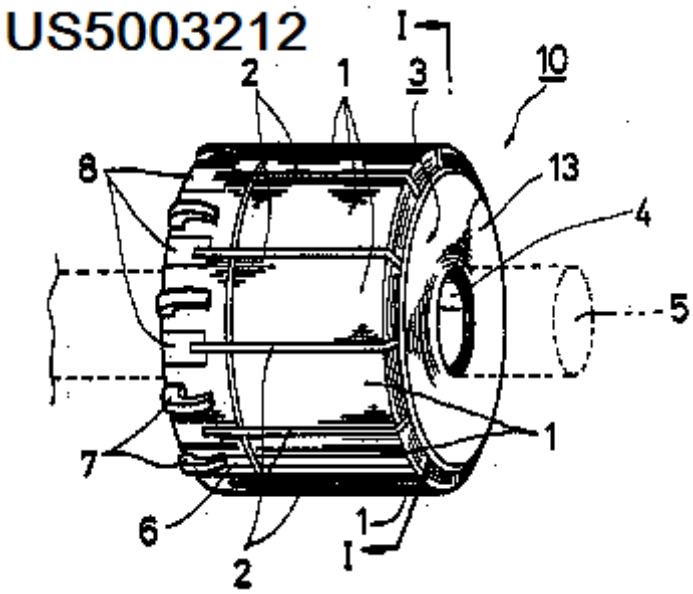

References

Informative references

Attention is drawn to the following places, which may be of interest for search:

Commutators wherein the segments are formed by extensions of dynamo-electric machine winding	H02K

H01R 39/045

{the commutators being made of carbon}

Definition statement

This place covers:

Illustrative example of subject matter classified in H01R 39/045

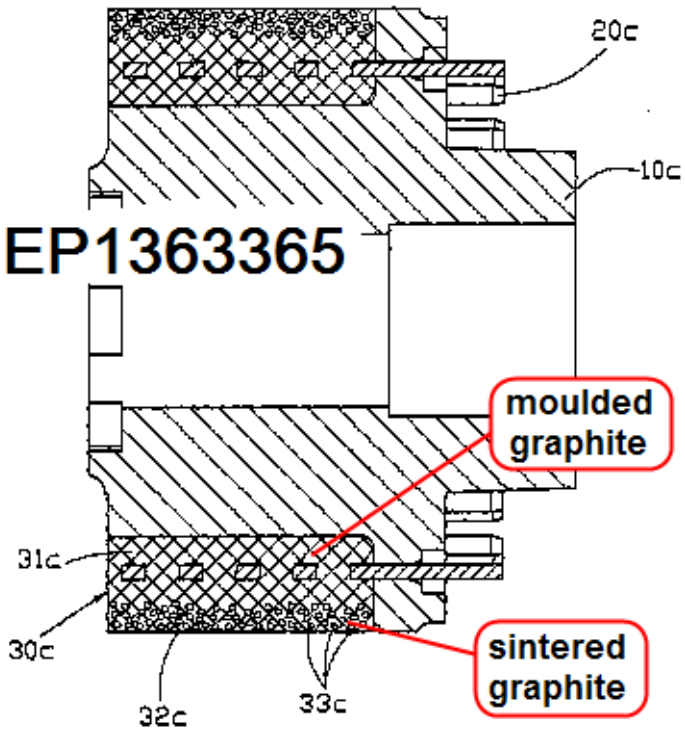

H01R 39/06

other than with external cylindrical contact surface, e.g. flat commutators

Definition statement

This place covers:

Illustrative example of subject matter classified in H01R 39/06

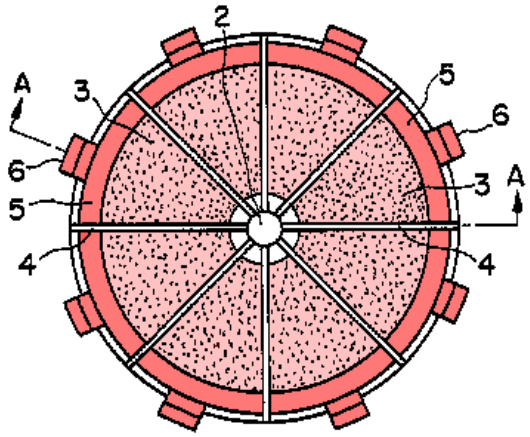

DE19601863

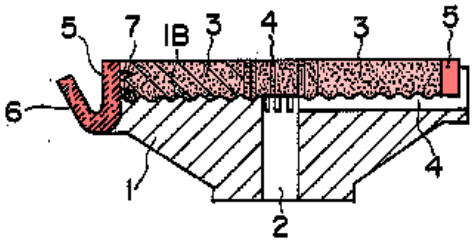

H01R 39/08

Slip-rings

Definition statement

This place covers:

Illustrative example of subject matter classified in H01R 39/08

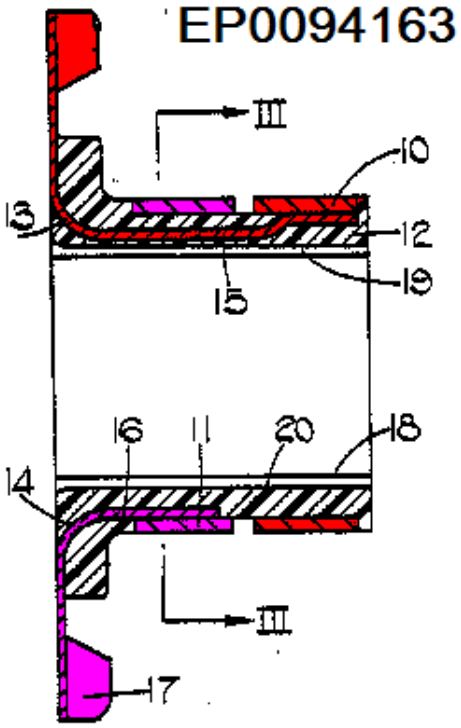

H01R 39/14

Fastenings of commutators or slip-rings to shafts

Definition statement

This place covers:

Illustrative example of subject matter classified in H01R 39/14

GB2099230

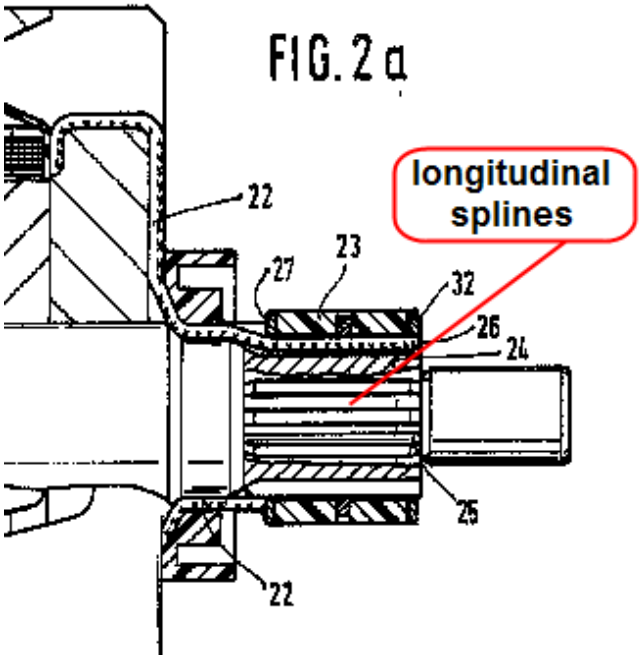

H01R 39/16

by means of moulded or cast material applied during or after assembly

Definition statement

This place covers:

Illustrative example of subject matter classified in H01R 39/16

DE102008011504

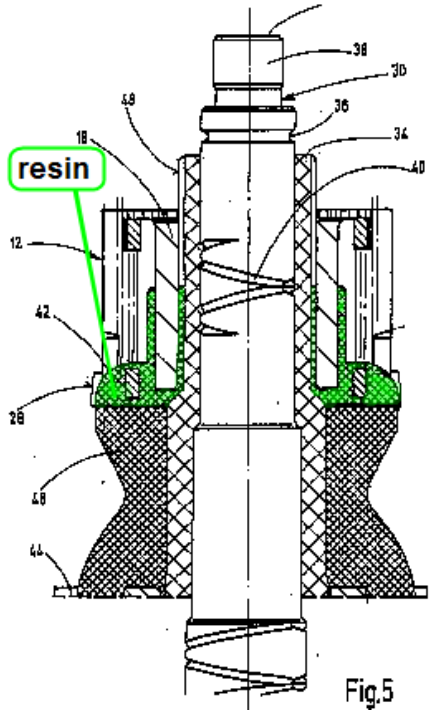

Fig.5

H01R 39/24

Laminated contacts; Wire contacts, e.g. metallic brush, carbon fibres

Definition statement

This place covers:

Illustrative example of subject matter classified in H01R 39/24

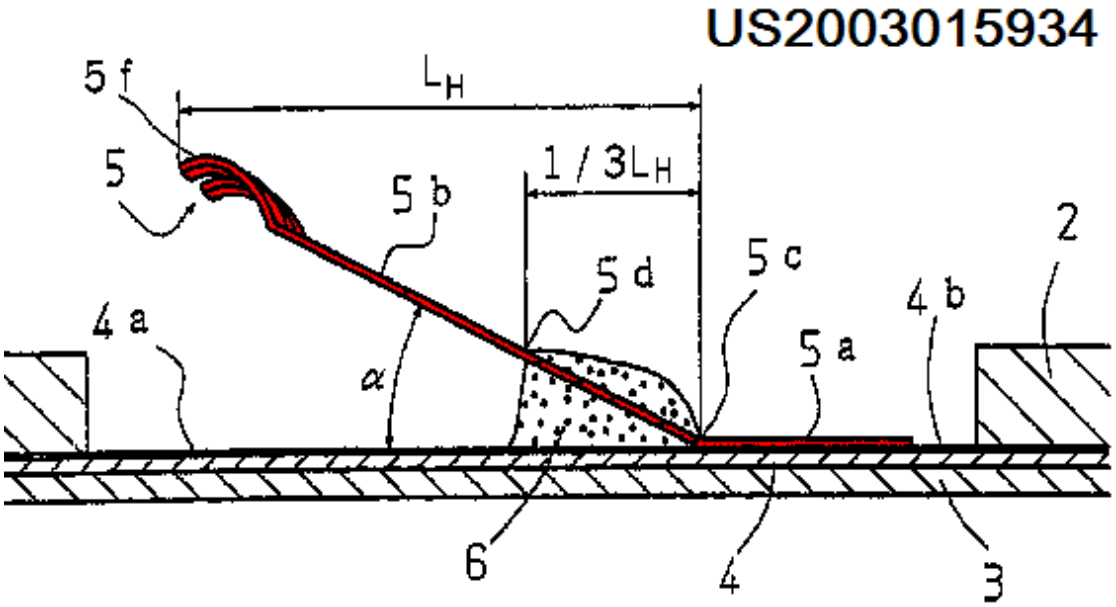

H01R 39/26

Solid sliding contacts, e.g. carbon brush

Definition statement

This place covers:

Illustrative example of subject matter classified in H01R 39/26

WO2005074079

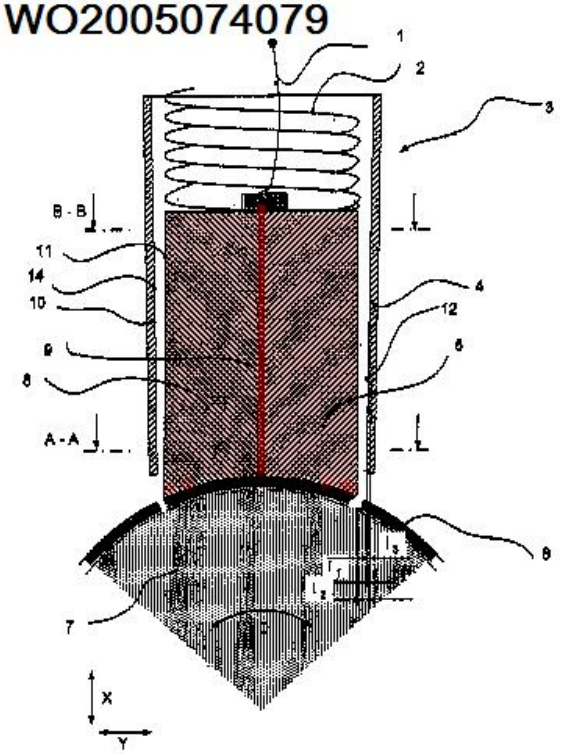

DE2838144

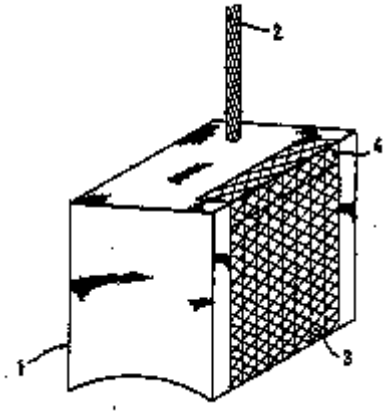

H01R 39/46

Auxiliary means for improving current transfer, or for reducing or preventing sparking or arcing

Definition statement

This place covers:

Illustrative example of subject matter classified in H01R 39/46

DE102006057694

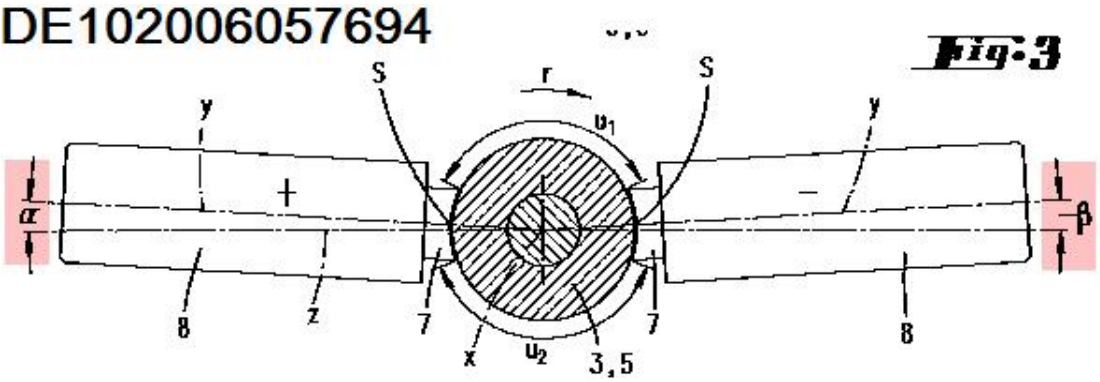

WO03075417

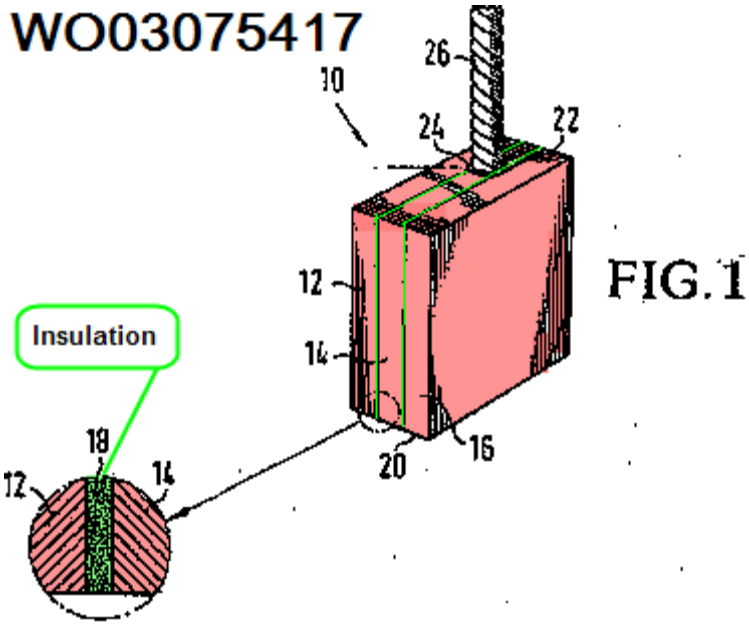

FIG. 1

FIG. 2

H01R 39/56

Devices for lubricating or polishing slip-rings or commutators during operation of the collector

Definition statement

This place covers:

Illustrative example of subject matter classified in H01R 39/56

US2008030100

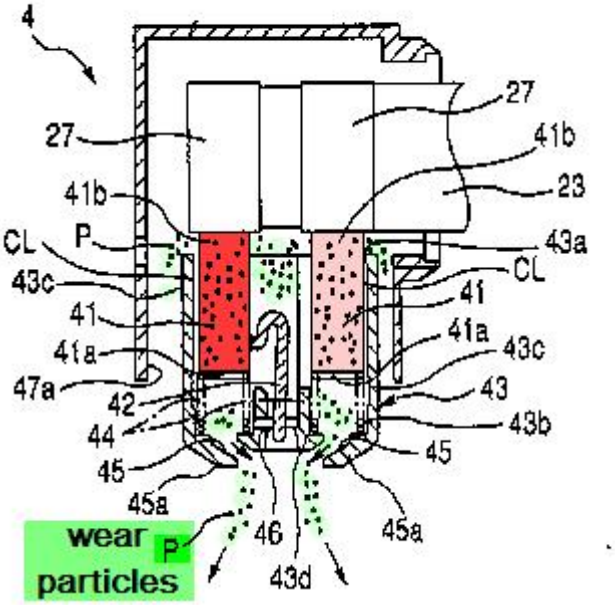

US5361012

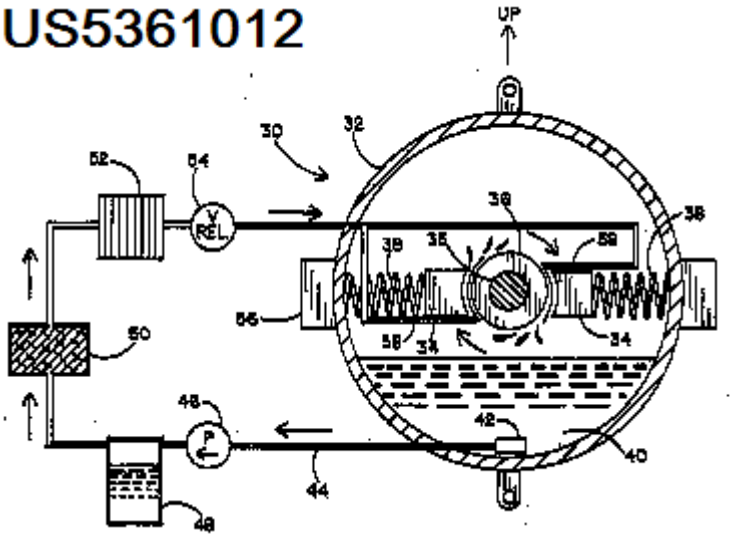

H01R 39/58

Means structurally associated with the current collector for indicating condition thereof, e.g. for indicating brush wear

Definition statement

This place covers:

Illustrative example of subject matter classified in H01R 39/58

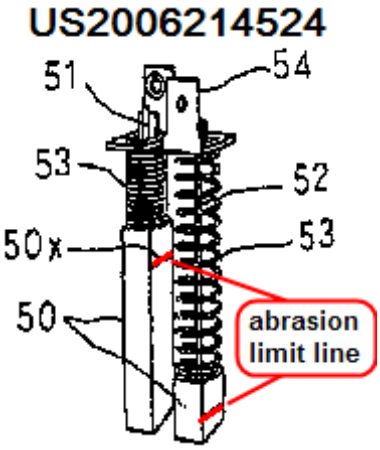

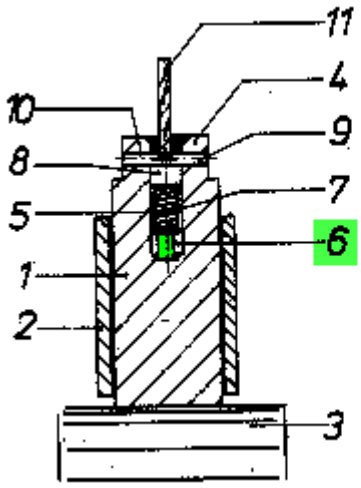

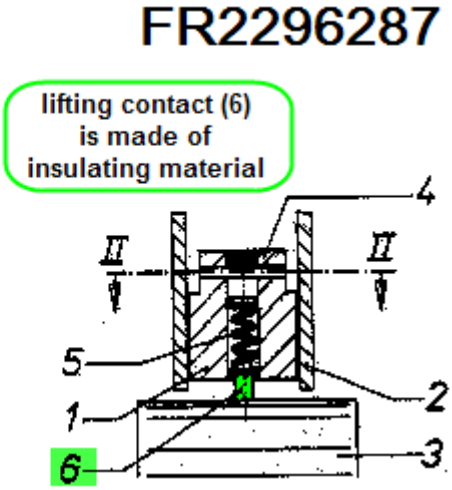

H01R 39/59

Means structurally associated with the brushes for interrupting current (H01R 39/58 takes precedence)

Definition statement

This place covers:

Illustrative example of subject matter classified in H01R 39/59

DE202010002664U

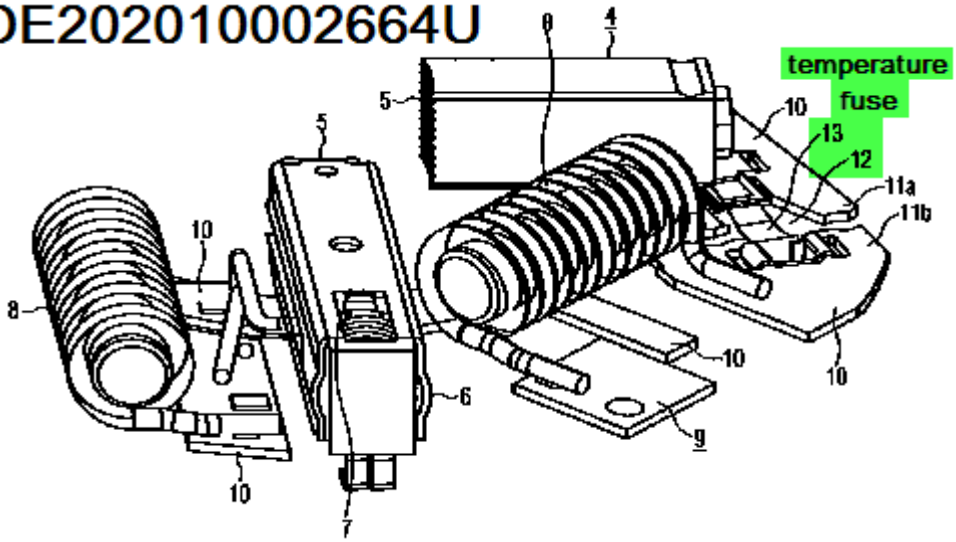

US2007108864

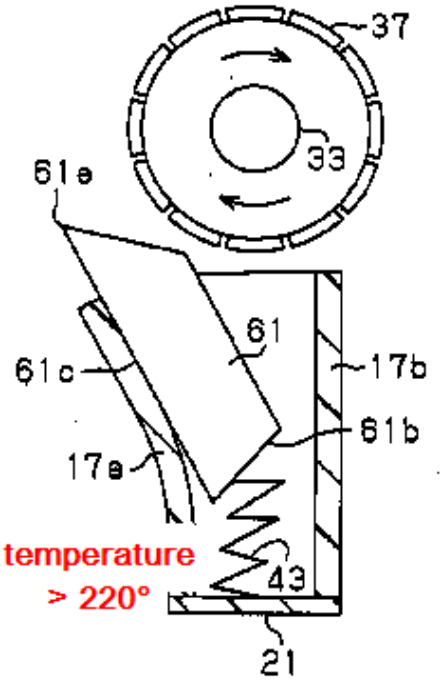

References

Limiting references

This place does not cover:

Means structurally associated with the current collector for indicating condition thereof	H01R 39/58

H01R 39/60

Devices for interrupted current collection, e.g. commutating device, distributor, interrupter (self-interrupters H01H, e.g. H01H 51/34)

Definition statement

This place covers:

Illustrative example of subject matter classified in H01R 39/60

US3681543

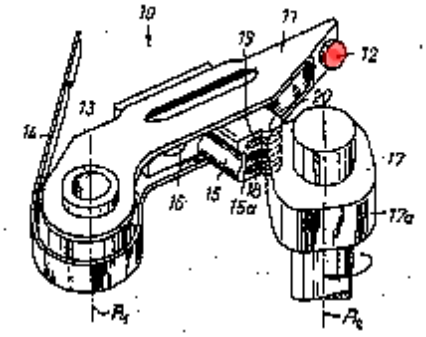

References

Informative references

Attention is drawn to the following places, which may be of interest for search:

Self-interrupters	H01H, e.g. H01H 51/34

H01R 39/62

with more than one brush co-operating with the same set of segments

Definition statement

This place covers:

Illustrative example of subject matter classified in H01R 39/62

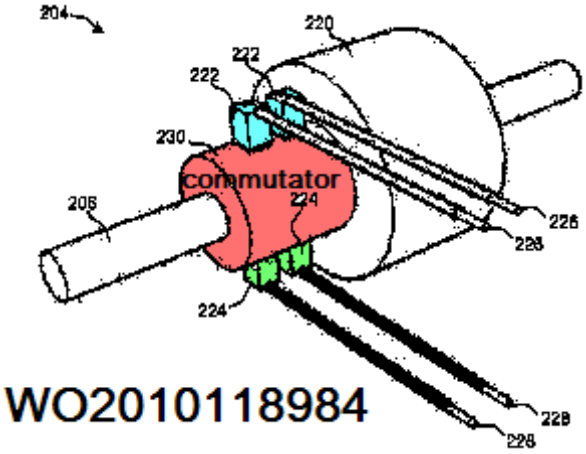

H01R 39/64

Devices for uninterrupted current collection

Definition statement

This place covers:

Illustrative example of subject matter classified in H01R 39/64

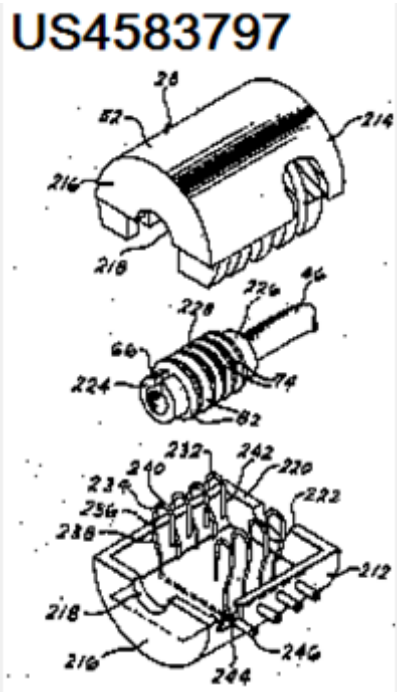

H01R 39/643

{through ball or roller bearing}

Definition statement

This place covers:

Illustrative example of subject matter classified in H01R 39/643

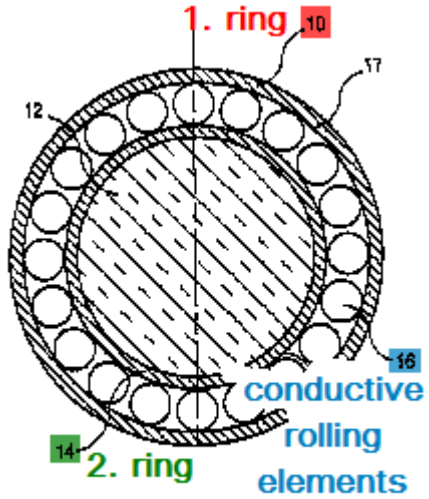

WO03019735

H01R 41/00

Non-rotary current collectors for maintaining contact between moving and stationary parts of an electric circuit (end pieces terminating in a hook or the like H01R 11/12; current collectors for power supply lines of electrically-propelled vehicles B60L 5/00)

Definition statement

This place covers:

Non-rotary current collectors allowing limited or unlimited movement between moving and stationary parts.

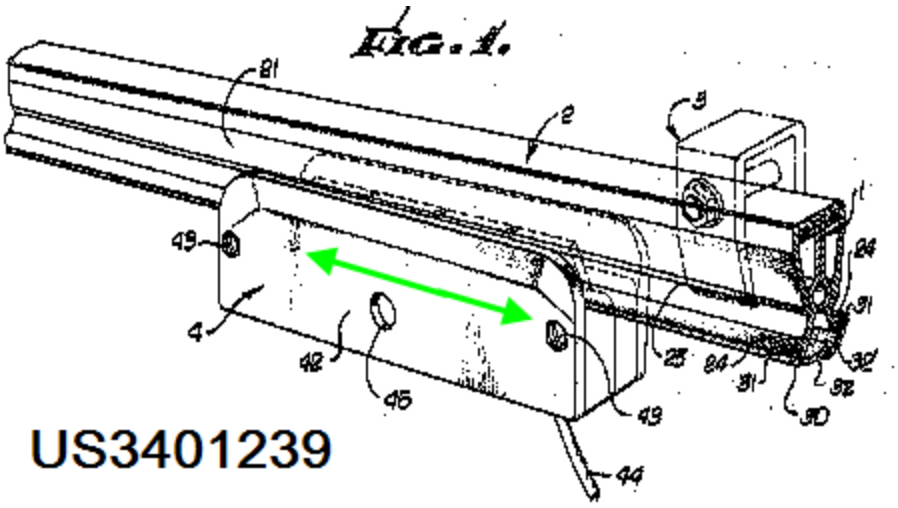

US3401239

References

Limiting references

This place does not cover:

End pieces terminating in a hook or the like	H01R 11/12

Informative references

Attention is drawn to the following places, which may be of interest for search:

Current collectors for power supply lines of electrically-propelled vehicles	B60L 5/00

H01R 41/02

Devices for interrupted current collection, e.g. distributor (electrically-operated selector switches H01H 67/00)

Definition statement

This place covers:

Illustrative example of subject matter classified in H01R 41/02

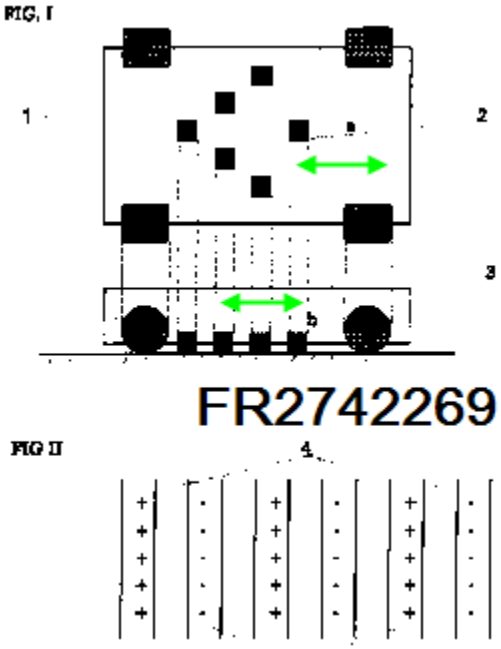

References

Informative references

Attention is drawn to the following places, which may be of interest for search:

Electrically-operated selector switches	H01H 67/00

H01R 43/00

Apparatus or processes specially adapted for manufacturing, assembling, maintaining, or repairing of line connectors or current connectors or for joining electric conductors (of trolley lines B60M 1/28; joining cables H02G 1/14)

References

Informative references

Attention is drawn to the following places, which may be of interest for search:

Joining electric conductors of trolley lines	B60M 1/28
Joining cables	H02G 1/14

H01R 43/01

for connecting unstripped conductors to contact members having insulation cutting edges

Definition statement

This place covers:

Illustrative example of subject matter classified in H01R 43/01

US4839962

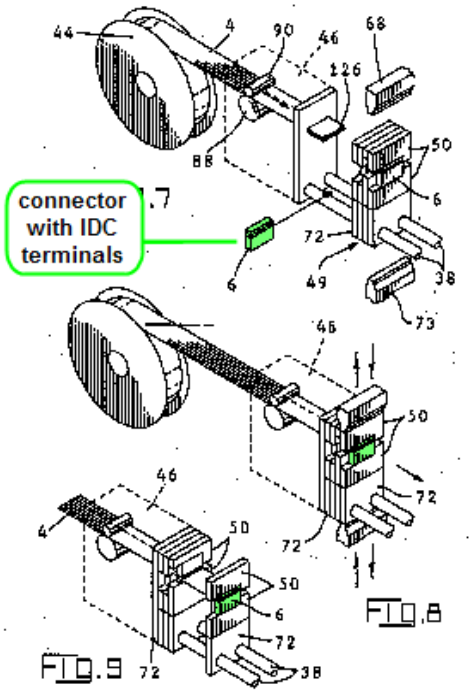

H01R 43/015

{Handtools}

Definition statement

This place covers:

Illustrative example of subject matter classified in H01R 43/015

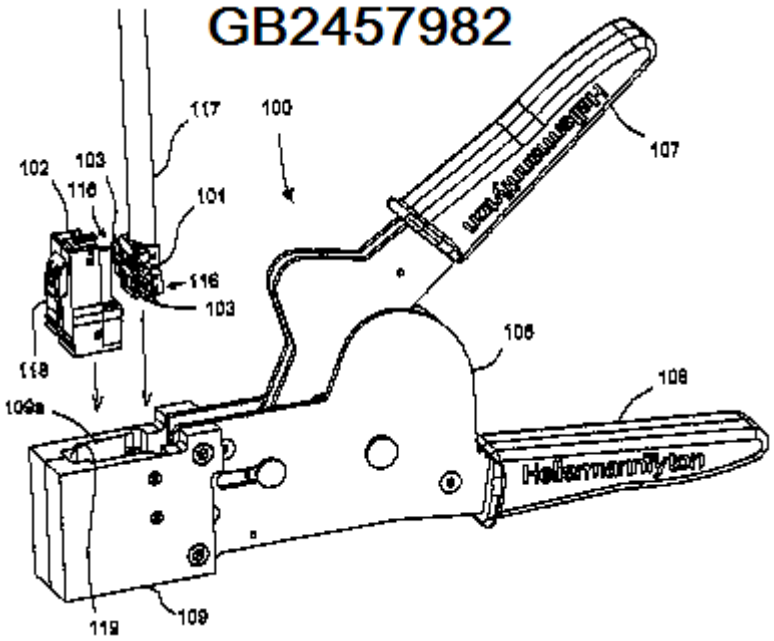

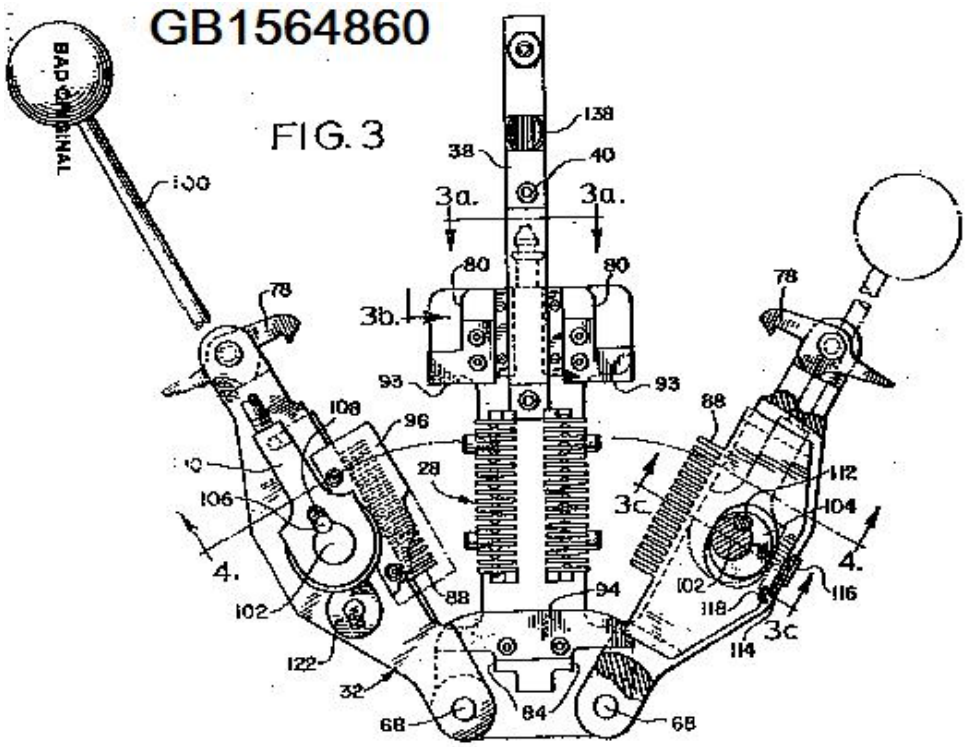

H01R 43/02

for soldered or welded connections (soldering or welding in general B23K)

References

Limiting references

This place does not cover:

Soldering or welding in general	B23K
For assembling or mounting of electrical components, other than wires or connectors, on printed circuits see	H05K 13/00

H01R 43/0207

{Ultrasonic-, H.F.-, cold- or impact welding}

Definition statement

This place covers:

Illustrative example of subject matter classified in H01R 43/0207

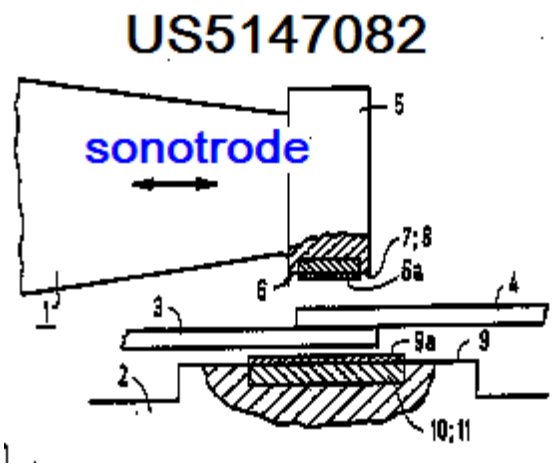

H01R 43/0214

{Resistance welding (H01R 43/0228 takes precedence)}

References

Limiting references

This place does not cover:

Apparatus or processes specially adapted for soldered or welded connections without preliminary removing of insulation before soldering or welding	H01R 43/0228

H01R 43/0221

{Laser welding (H01R 43/0228 takes precedence)}

Definition statement

This place covers:

Illustrative example of subject matter classified in H01R 43/0221

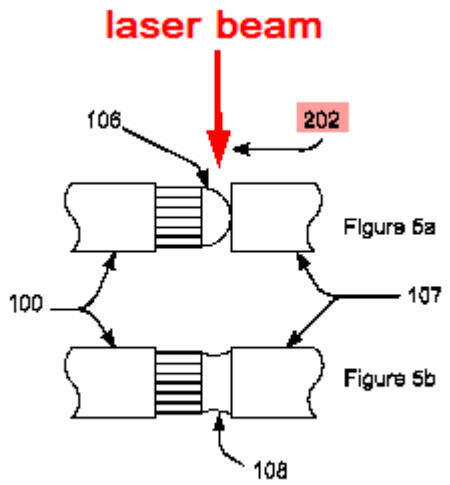

EP2209161

References

Limiting references

This place does not cover:

Apparatus or processes specially adapted for soldered or welded connections without preliminary removing of insulation before soldering or welding	H01R 43/0228

H01R 43/0235

{for applying solder (H01R 43/0228 takes precedence)}

Definition statement

This place covers:

Illustrative example of subject matter classified in H01R 43/0235

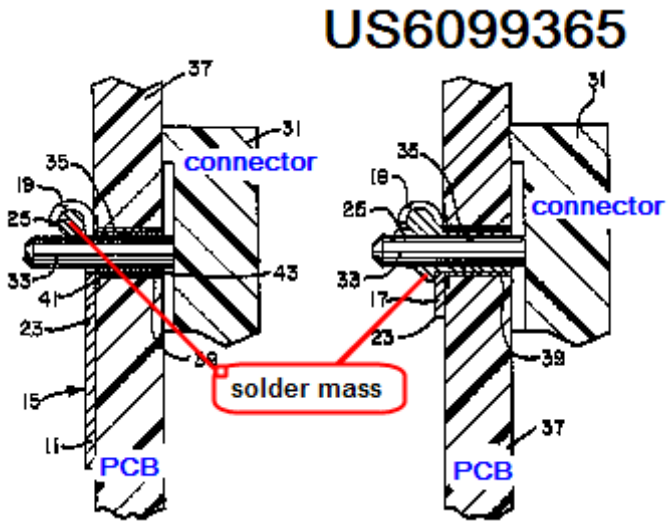

References

Limiting references

This place does not cover:

Apparatus or processes specially adapted for soldered or welded connections without preliminary removing of insulation before soldering or welding	H01R 43/0228

H01R 43/0256

{for soldering or welding connectors to a printed circuit board}

Definition statement

This place covers:

Illustrative example of subject matter classified in H01R 43/0256

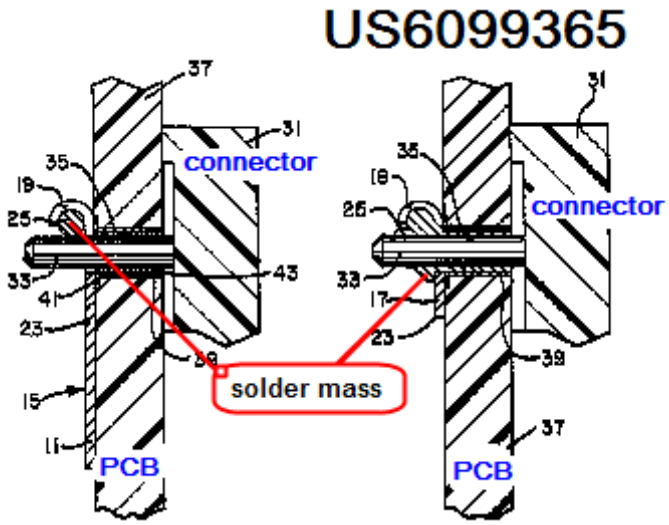

H01R 43/027

for connecting conductors by clips

Definition statement

This place covers:

Illustrative example of subject matter classified in H01R 43/027

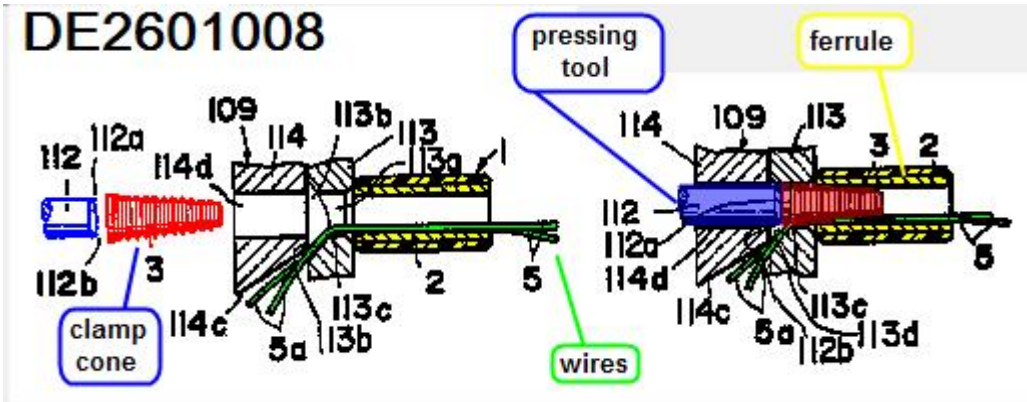

H01R 43/0275

{by using explosive force}

Definition statement

This place covers:

Illustrative example of subject matter classified in H01R 43/0275

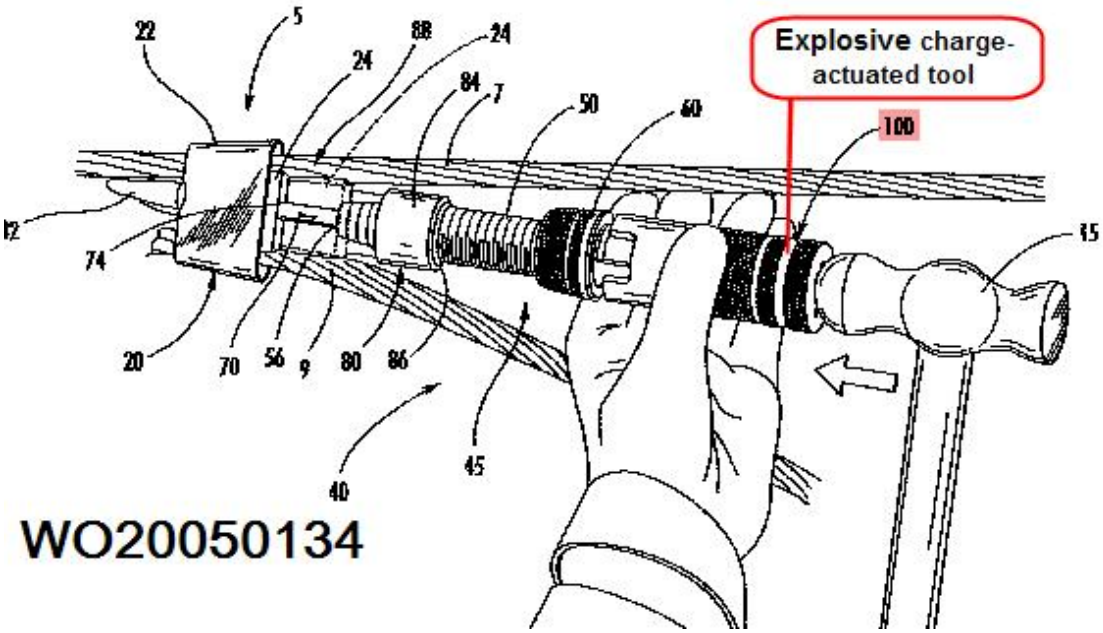

H01R 43/033

for wrapping or unwrapping wire connections

Definition statement

This place covers:

Illustrative example of subject matter classified in H01R 43/033

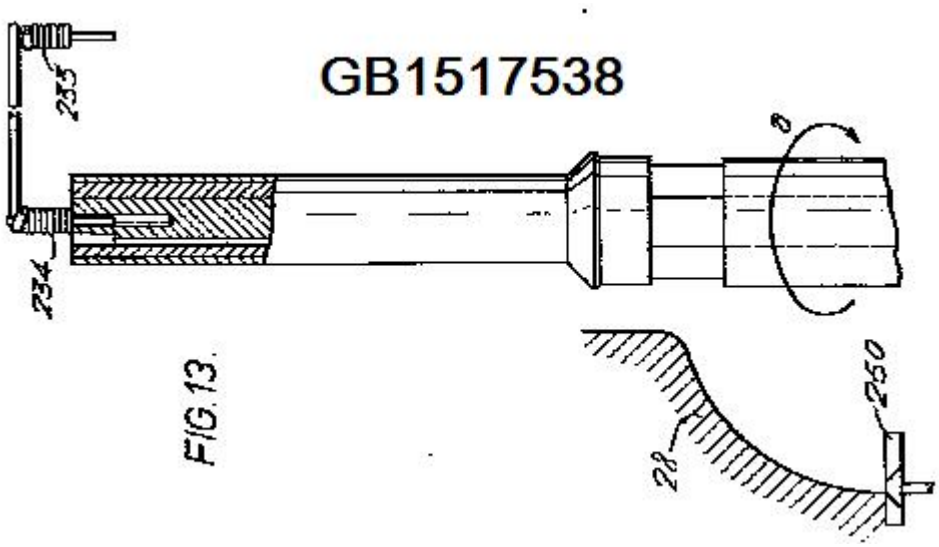

H01R 43/0335

{for unwraping}

Definition statement

This place covers:

Illustrative example of subject matter classified in H01R 43/0335

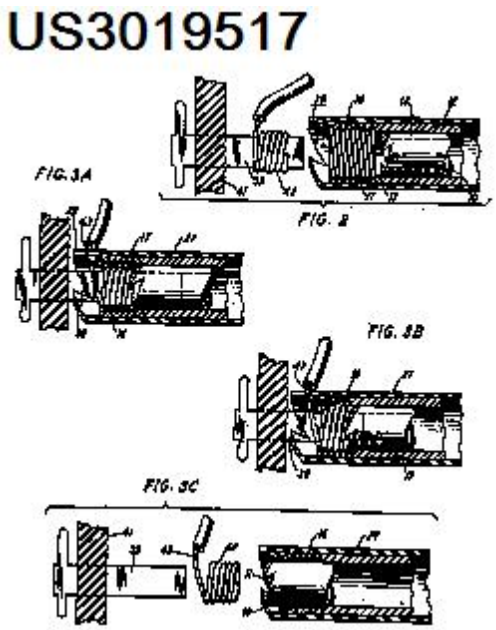

H01R 43/04

for forming connections by deformation, e.g. crimping tool

Definition statement

This place covers:

This group covers all kind of apparatus, processes, methods specially adapted for forming electrical connections by deformation.

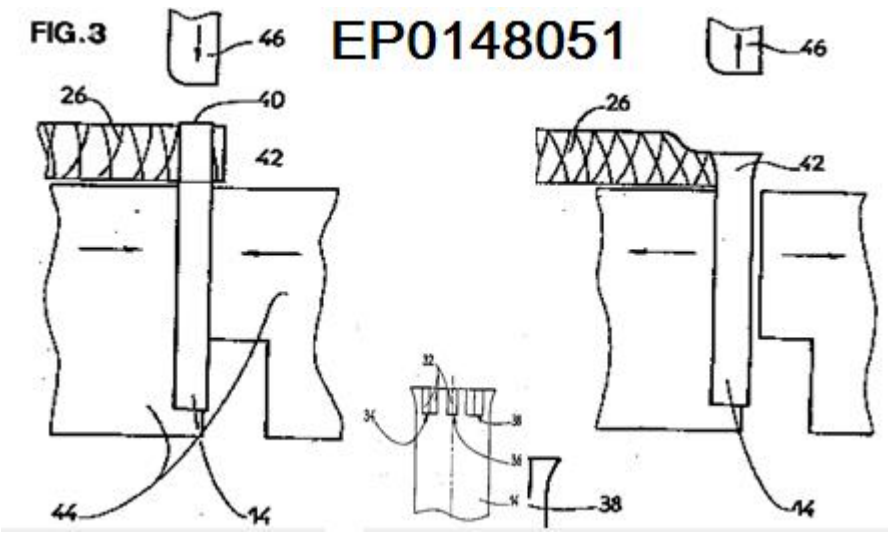

H01R 43/0424

{with more than two radially actuated mandrels}

Definition statement

This place covers:

Illustrative example of subject matter classified in H01R 43/0424

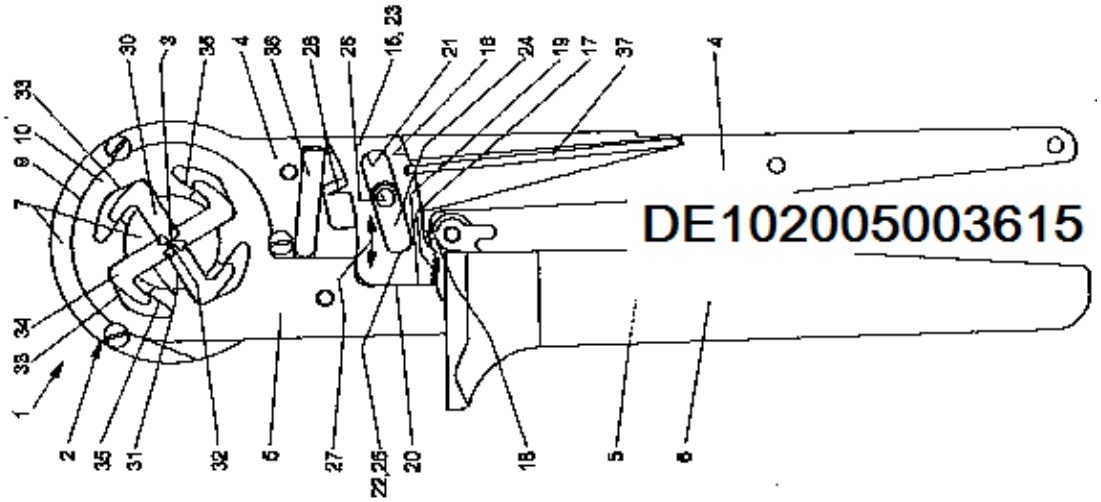

H01R 43/0425

{with mandrels actuated in axial direction to the wire}

Definition statement

This place covers:

Illustrative example of subject matter classified in H01R 43/0425

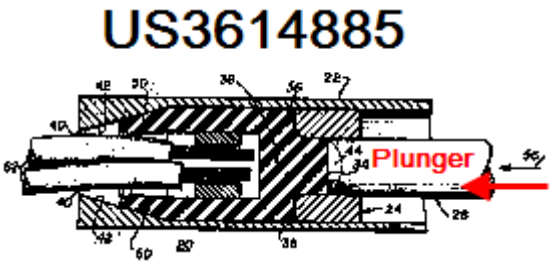

H01R 43/045

with contact member feeding mechanism

Definition statement

This place covers:

Illustrative example of subject matter classified in H01R 43/045

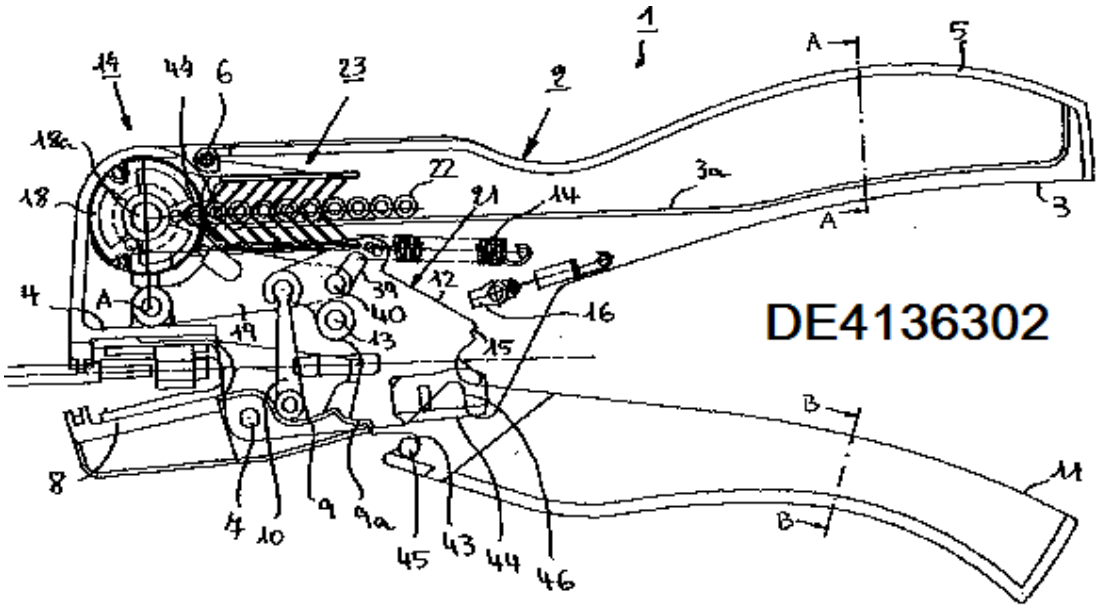

H01R 43/048

Crimping apparatus or processes (H01R 43/042 takes precedence)

Definition statement

This place covers:

All kind of apparatus, processes, methods specially adapted for forming electrical connections by crimping.

References

Limiting references

This place does not cover:

Hand tools for crimping	H01R 43/042

H01R 43/0488

{with crimp height adjusting means}

Definition statement

This place covers:

Illustrative example of subject matter classified in H01R 43/0488

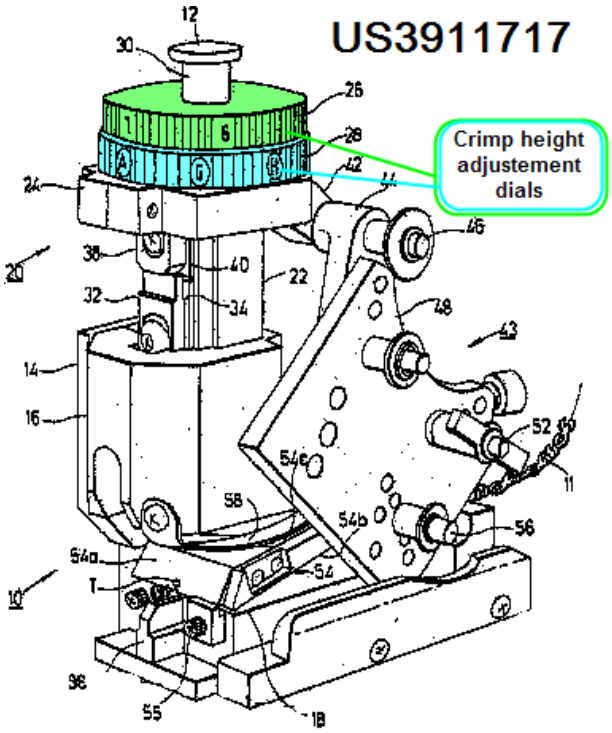

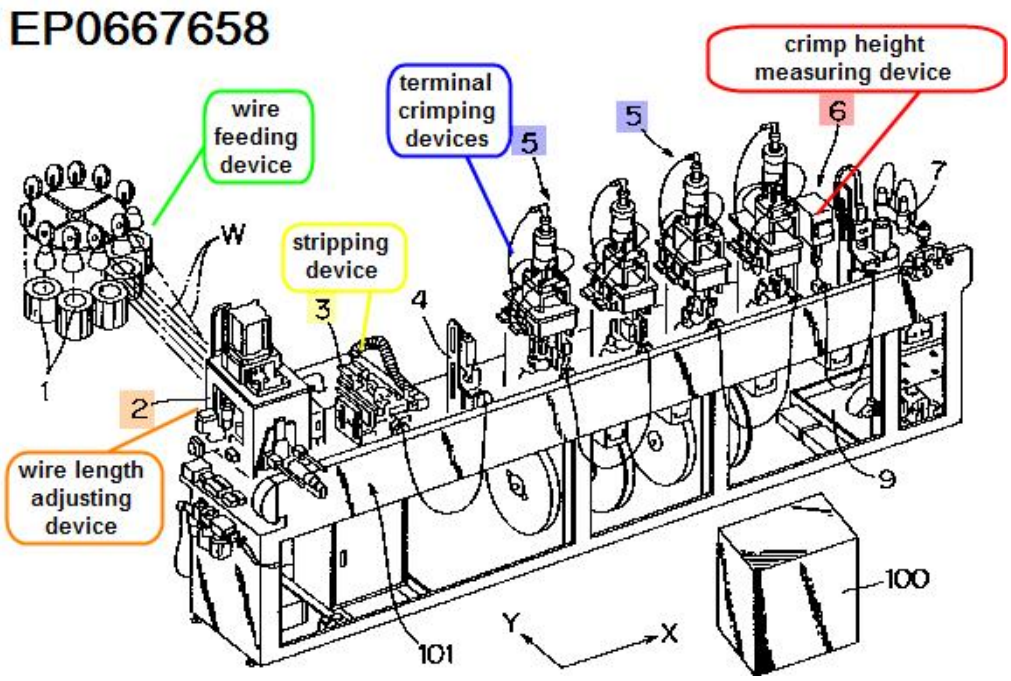

H01R 43/05

with wire-insulation stripping

Definition statement

This place covers:

Illustrative example of subject matter classified in H01R 43/05

EP0174823

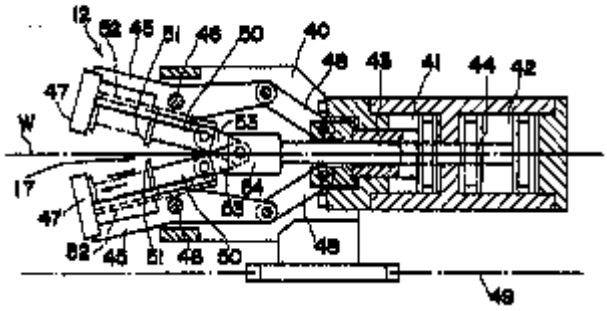

H01R 43/052

with wire-feeding mechanism

Definition statement

This place covers:

Illustrative example of subject matter classified in H01R 43/052

US2001025870

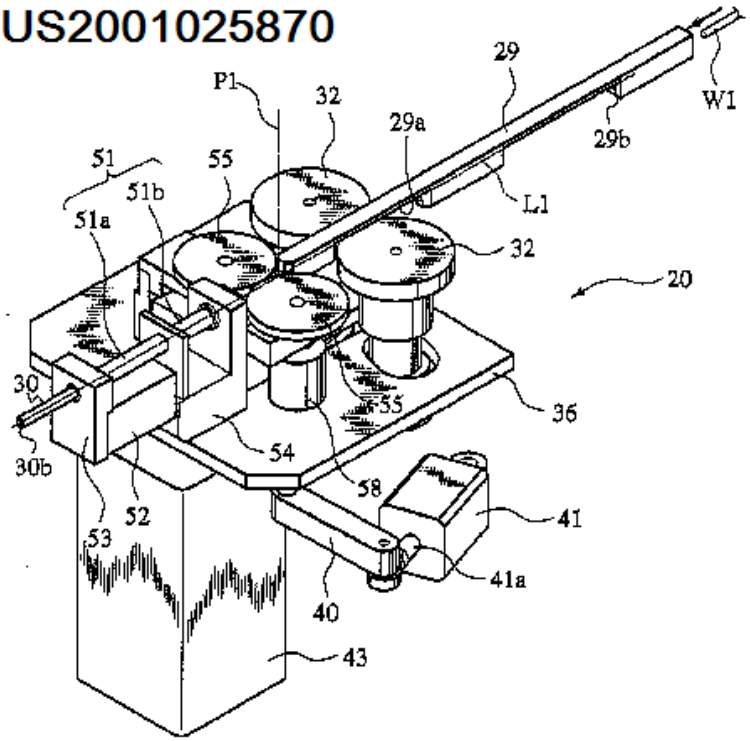

H01R 43/055

with contact member feeding mechanism

Definition statement

This place covers:

Illustrative example of subject matter classified in H01R 43/055

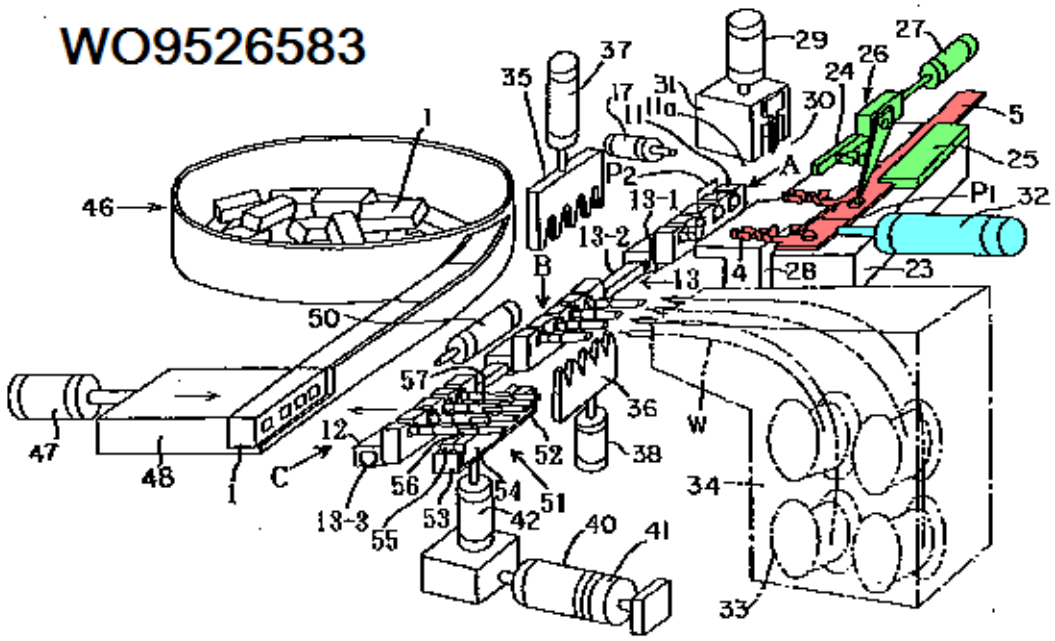

H01R 43/058

Crimping mandrels

Definition statement

This place covers:

Illustrative example of subject matter classified in H01R 43/058

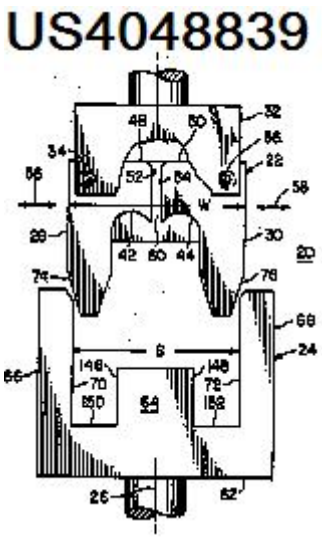

H01R 43/0585

{for crimping apparatus with more than two radially actuated mandrels}

Definition statement

This place covers:

Illustrative example of subject matter classified in H01R 43/0585

US3728889

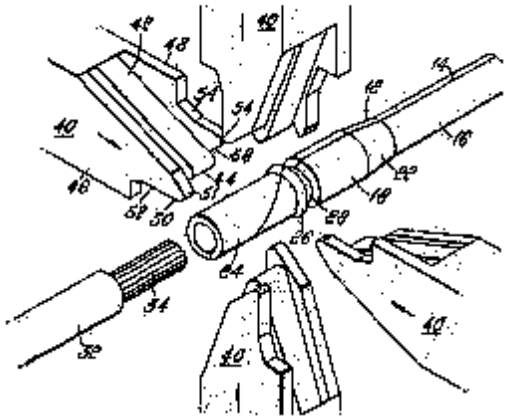

H01R 43/06

Manufacture of commutators

Definition statement

This place covers:

Illustrative example of subject matter classified in H01R 43/06

EP0571072

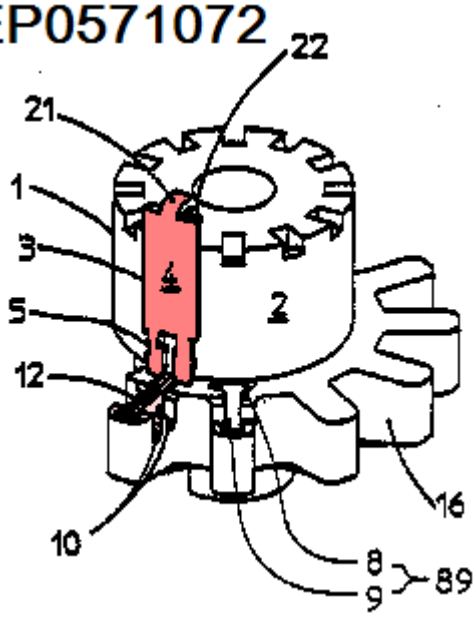

EP1003269

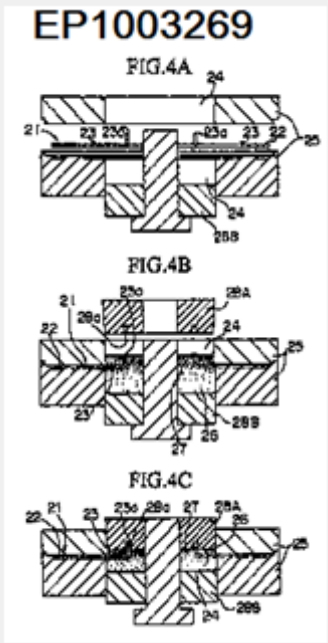

H01R 43/08

in which segments are not separated until after assembly

Definition statement

This place covers:

Illustrative example of subject matter classified in H01R 43/08

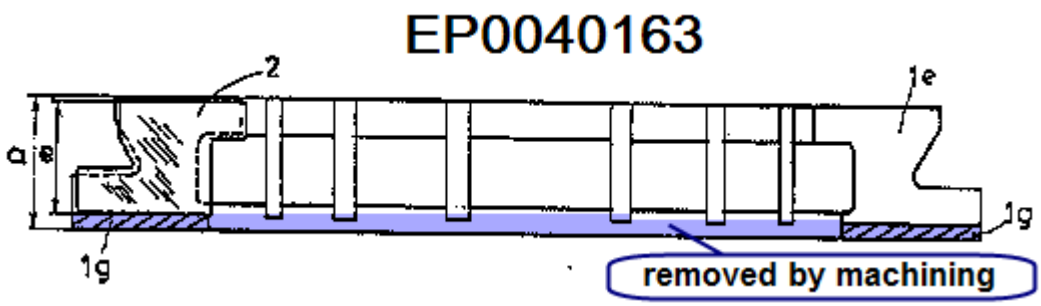

H01R 43/10

Manufacture of slip-rings

Definition statement

This place covers:

Illustrative example of subject matter classified in H01R 43/10

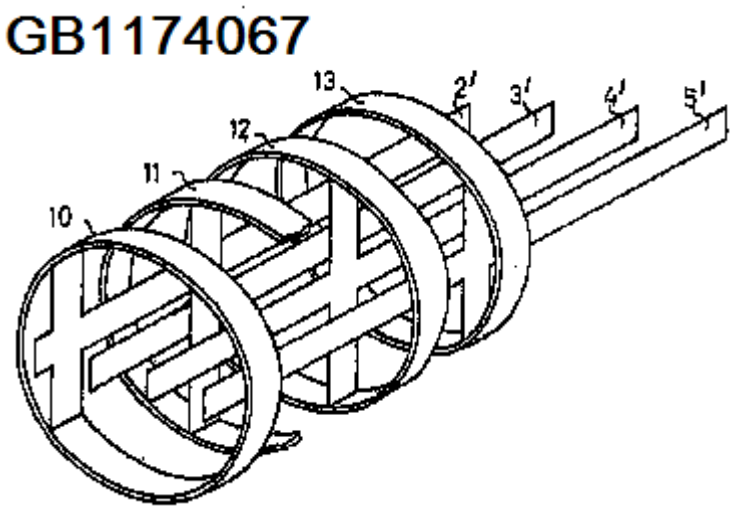

H01R 43/12

Manufacture of brushes

Definition statement

This place covers:

Illustrative example of subject matter classified in H01R 43/12

DE4430745

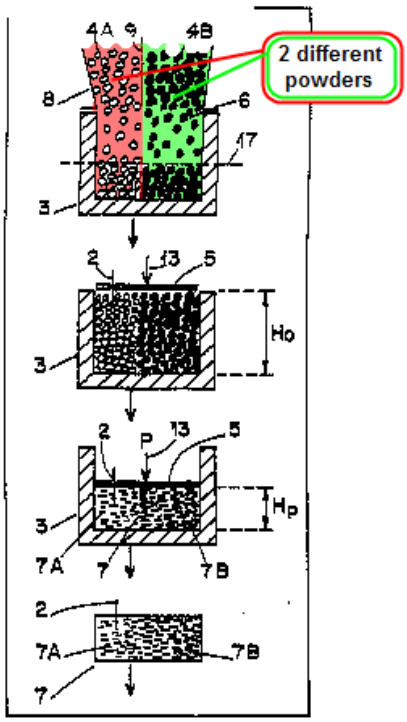

FR522784

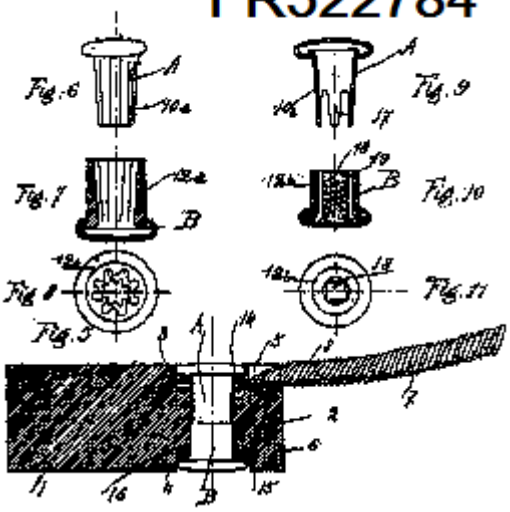

H01R 43/14

Maintenance of current collectors, e.g. reshaping of brushes, cleaning of commutators

Definition statement

This place covers:

Illustrative example of subject matter classified in H01R 43/14

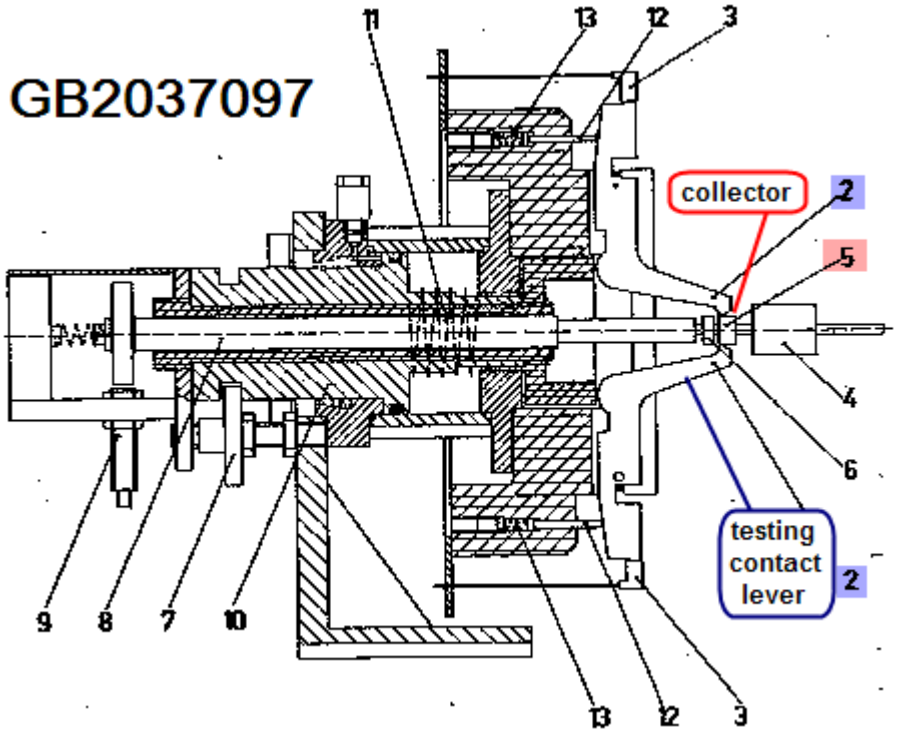

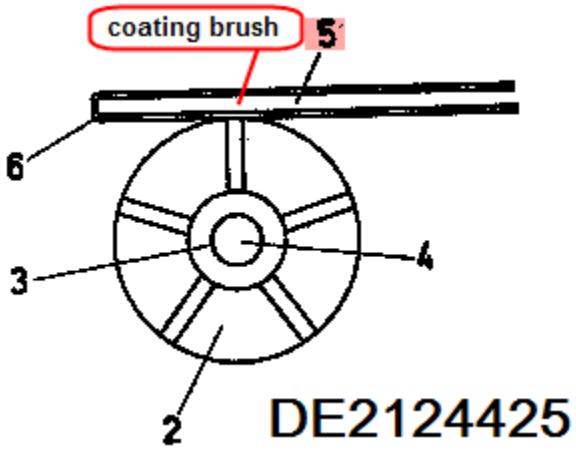

H01R 43/16

for manufacturing contact members, e.g. by punching and by bending

Definition statement

This place covers:

Illustrative example of subject matter classified in H01R 43/16

EP0510980

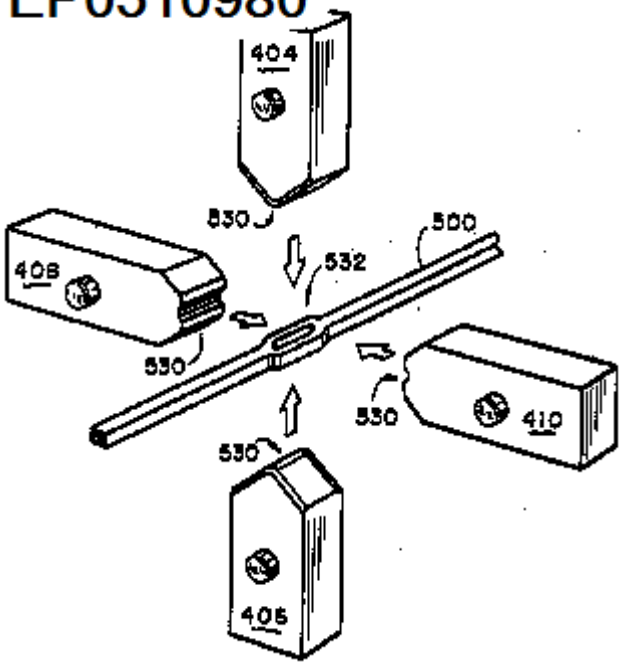

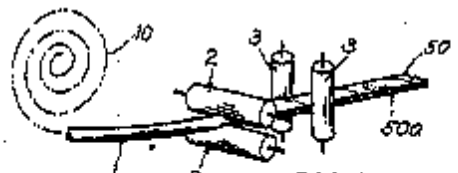

US4847993

FIG.1

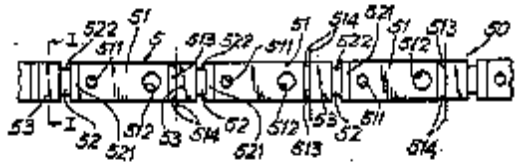

FIG.2

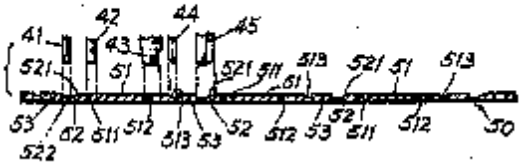

FIG.3

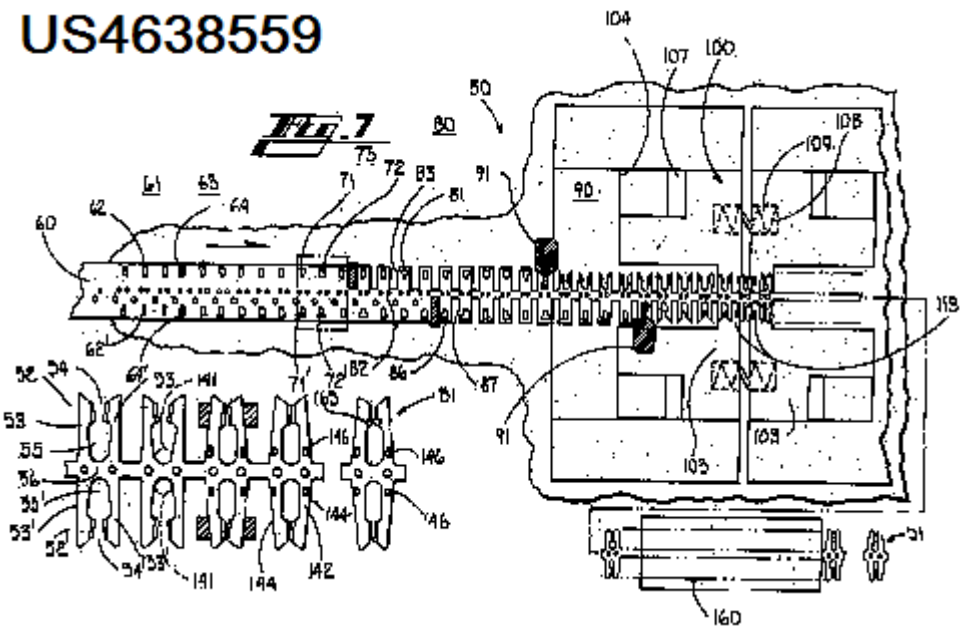

H01R 43/18

for manufacturing bases or cases for contact members

Definition statement

This place covers:

Illustrative example of subject matter classified in H01R 43/18

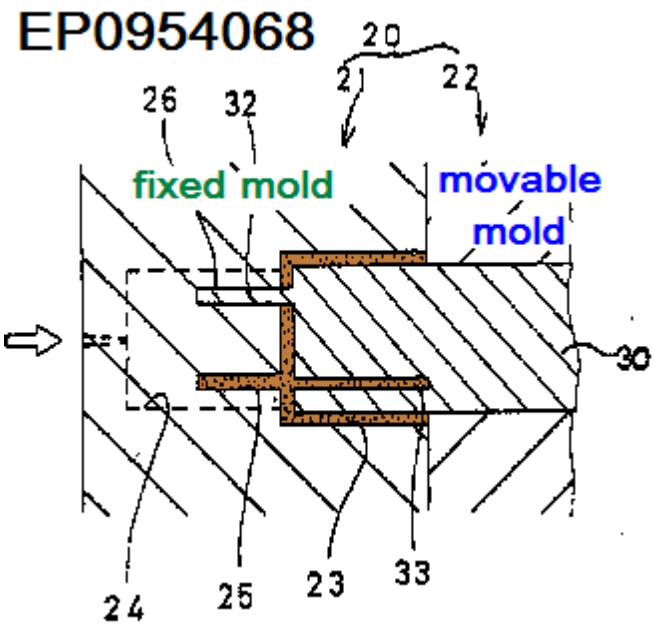

H01R 43/20

for assembling or disassembling contact members with insulating base, case or sleeve

Definition statement

This place covers:

Illustrative example of subject matter classified in H01R 43/20

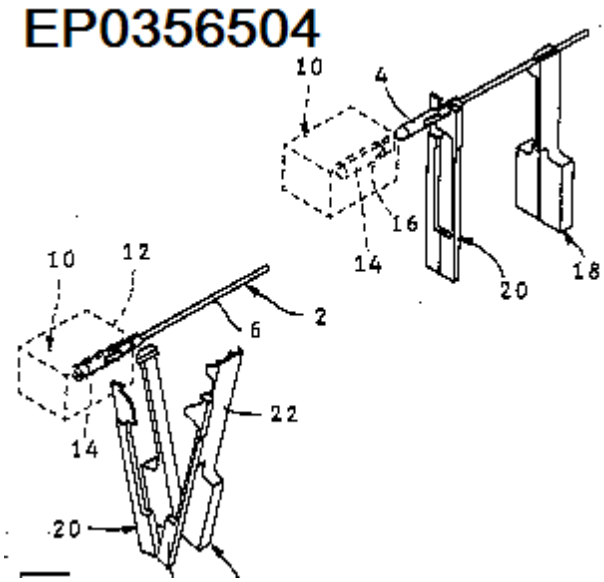

H01R 43/205

{with a panel or printed circuit board}

Definition statement

This place covers:

Illustrative example of subject matter classified in H01R 43/205

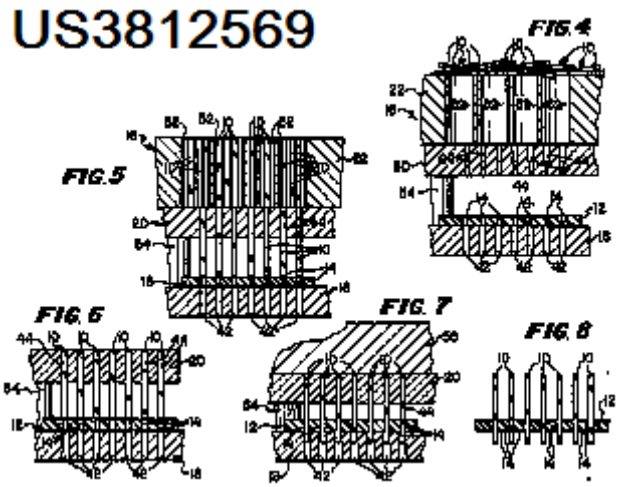

H01R 43/22

Hand tools

Definition statement

This place covers:

Illustrative example of subject matter classified in H01R 43/22

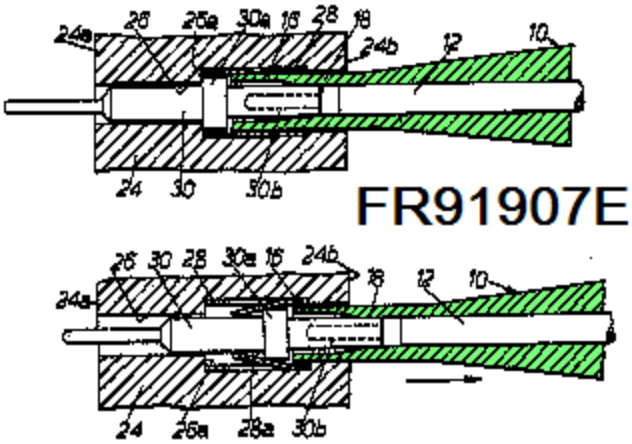

H01R 43/24

Assembling by moulding on contact members

Definition statement

This place covers:

Illustrative example of subject matter classified in H01R 43/24

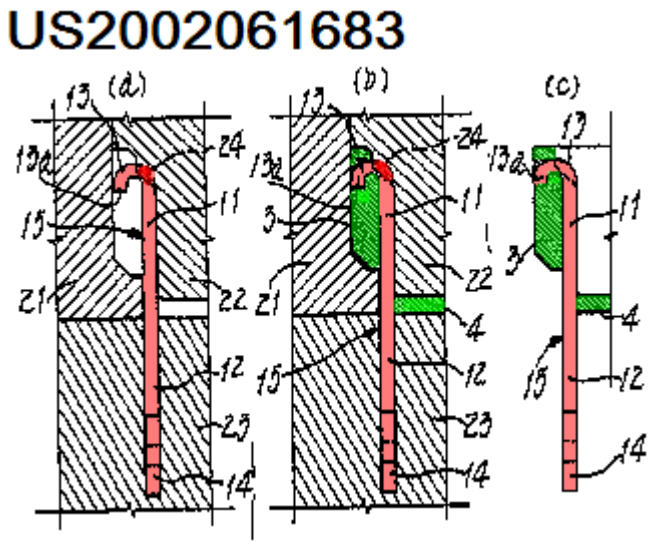

H01R 43/26

for engaging or disengaging the two parts of a coupling device (structural association with two-part coupling device H01R 13/629)

Definition statement

This place covers:

Illustrative example of subject matter classified in H01R 43/26

EP1220366

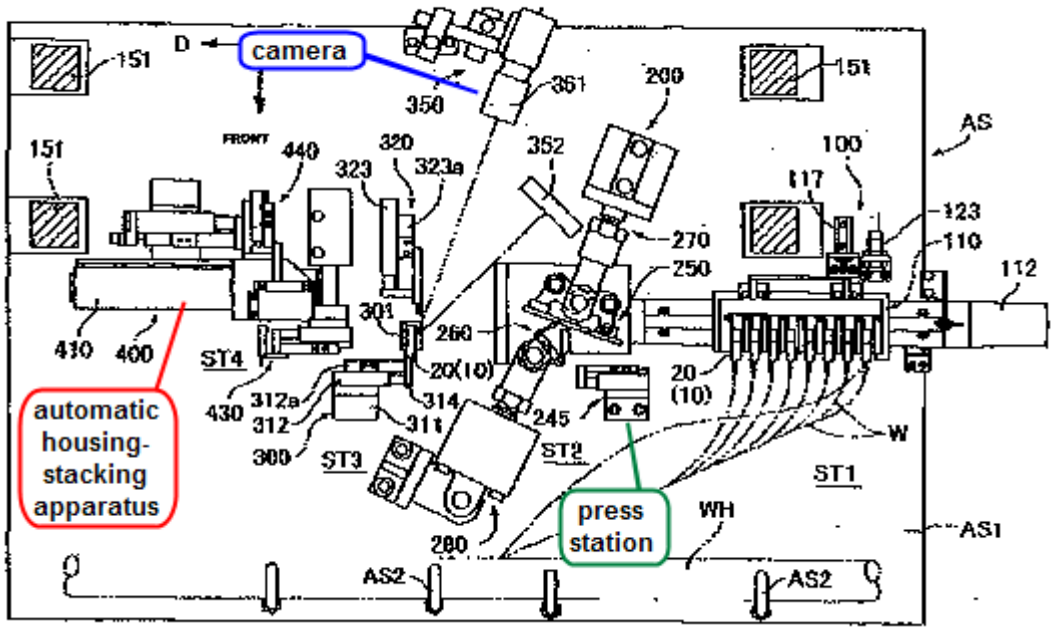

US5376016

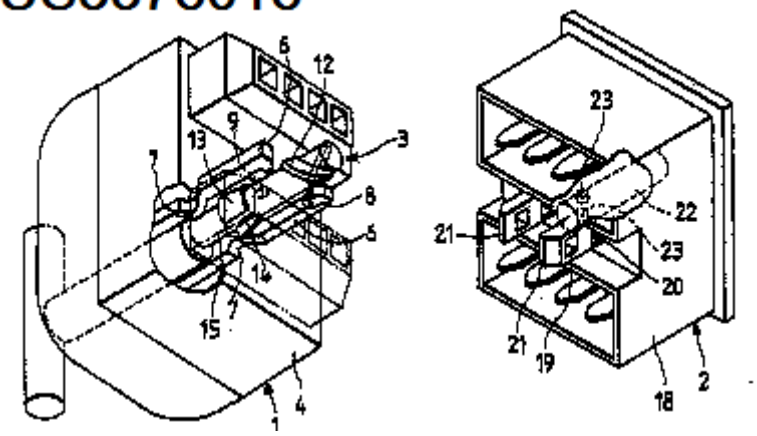

References

Limiting references

This place does not cover:

Structural association with two-part coupling device	H01R 13/629

H01R 43/28

for wire processing before connecting to contact members (H01R 43/02 - H01R 43/26 take precedence)

Definition statement

This place covers:

Illustrative example of subject matter classified in H01R 43/28

EP0769830

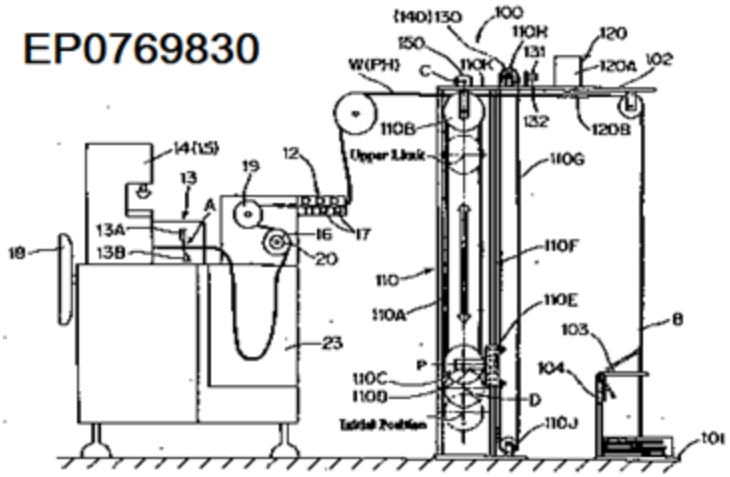

WO8912336

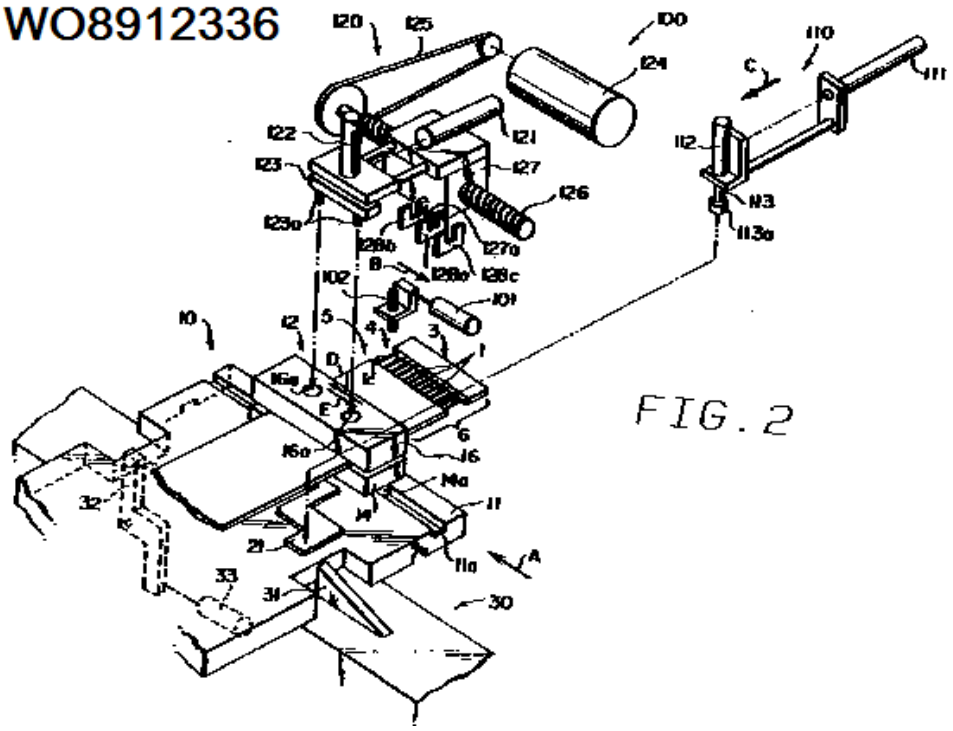

FIG. 2

References

Limiting references

This place does not cover:

Apparatus or processes specially adapted for soldered or welded connections	H01R 43/02

Apparatus or processes specially adapted for connecting conductors by clips	H01R 43/027
Apparatus or processes specially adapted for wrapping or unwrapping wire connections	H01R 43/033
Apparatus or processes specially adapted for forming connections by deformation	H01R 43/04
Manufacture of commutators	H01R 43/06
Manufacture of slip-rings	H01R 43/10
Manufacture of brushes	H01R 43/12
Maintenance of current collectors	H01R 43/14
Apparatus or processes specially adapted for manufacturing contact members	H01R 43/16
Apparatus or processes specially adapted for manufacturing bases or cases for contact members	H01R 43/18
Apparatus or processes specially adapted for assembling or disassembling contact members with insulating base, case or sleeve	H01R 43/20
Apparatus or processes specially adapted for engaging or disengaging the two parts of a coupling device	H01R 43/26

H01R 2101/00

One pole

Definition statement

This place covers:

Illustrative example of subject matter classified in H01R 2101/00

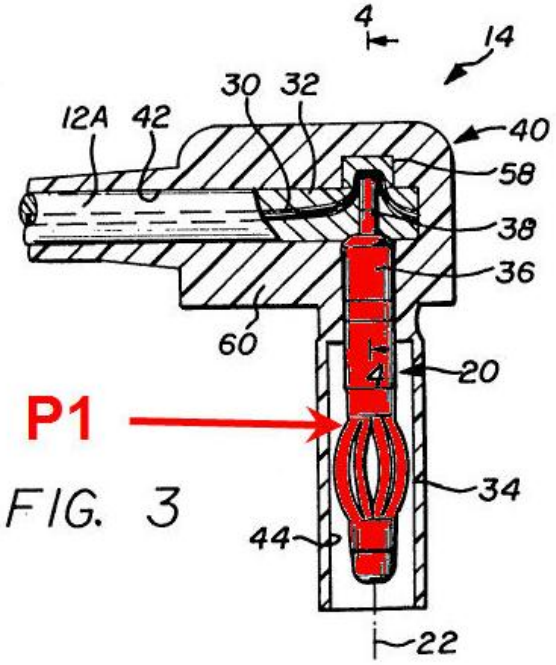

US5026301

H01R 2103/00

Two poles

Definition statement

This place covers:

Illustrative example of subject matter classified in H01R 2103/00

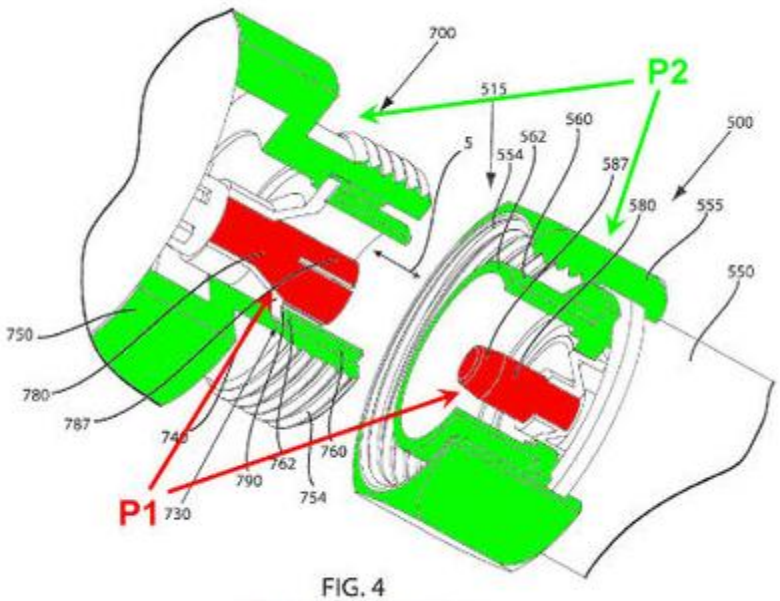

FIG. 4
US2010124839

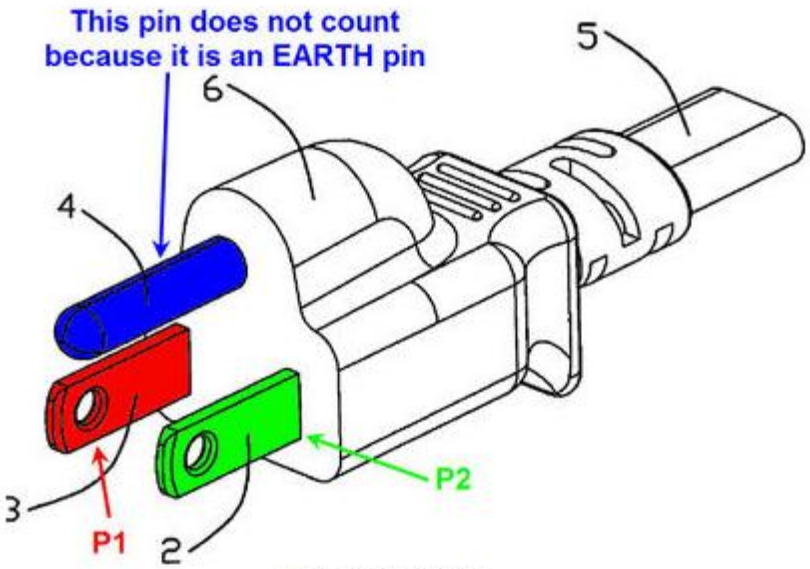

US2009017654

H01R 2105/00

Three poles

Definition statement

This place covers:

Illustrative example of subject matter classified in H01R 2105/00

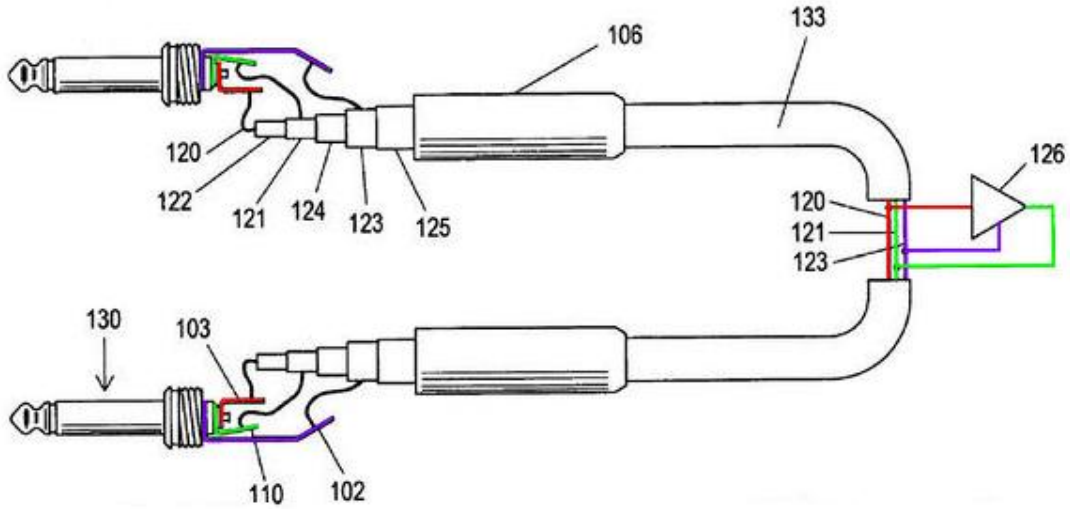

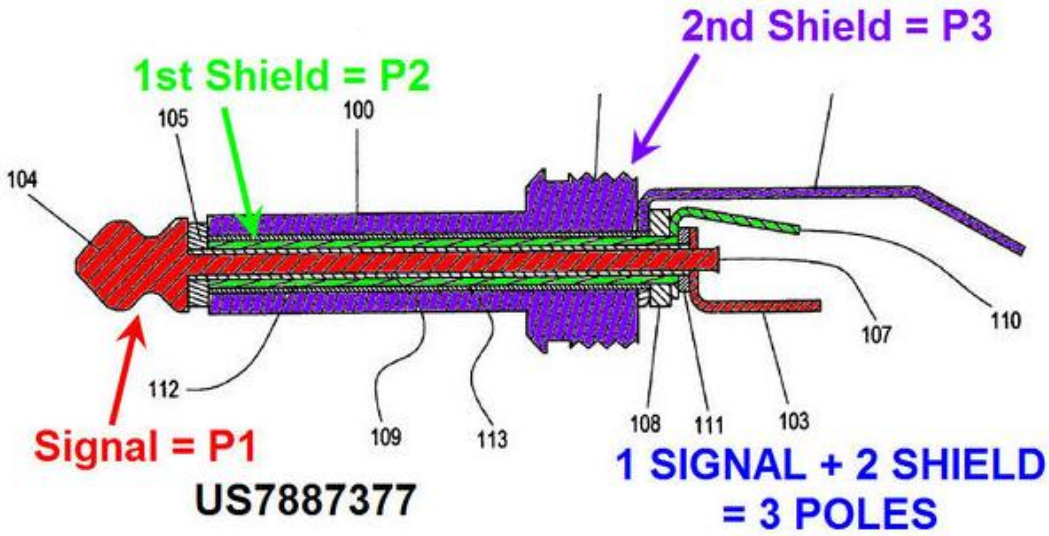

H01R 2107/00

Four or more poles

Definition statement

This place covers:

Illustrative example of subject matter classified in H01R 2107/00

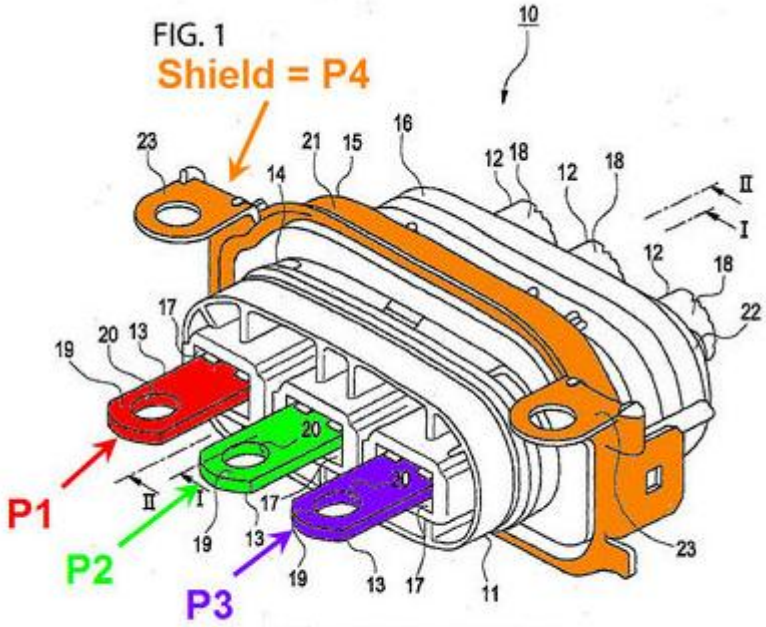

WO2009110639

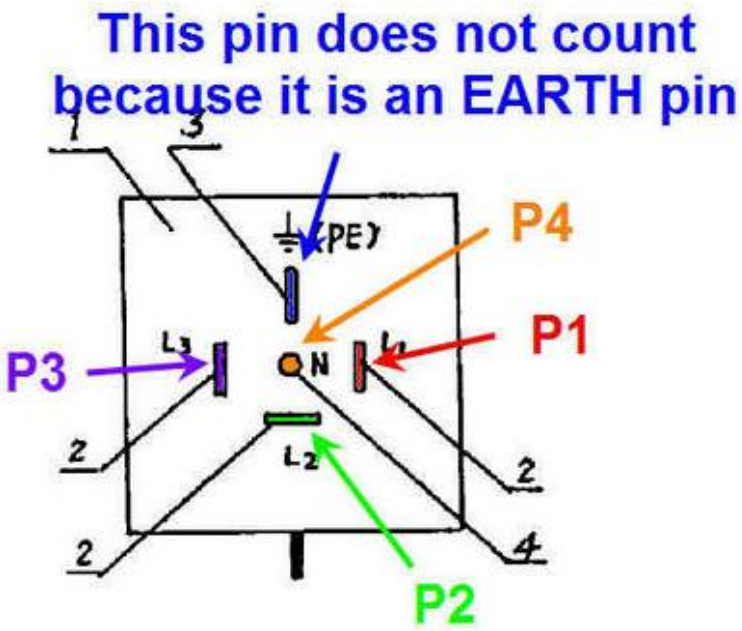

CN2298609Y

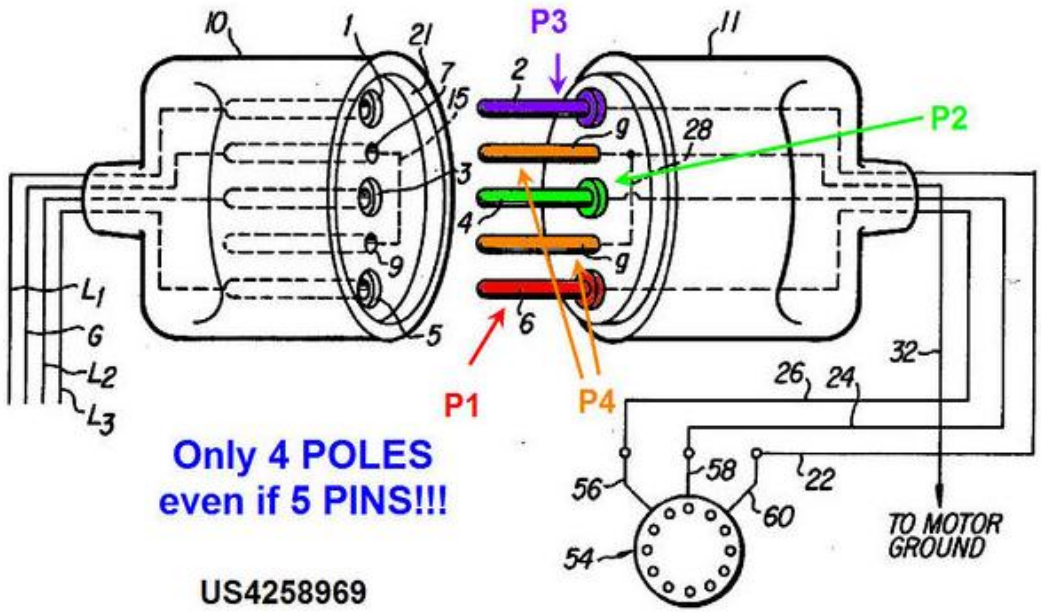
P3
P2
P1
P4
Only 4 POLES
even if 5 PINS!!!
US4258969
TO MOTOR
GROUND