H01Q

AERIALS (microwave radiators for near-field therepeutic treatment A61N 5/04; apparatus for testing aerials or for measuring aerial characteristics G01R; waveguides H01P; radiators or aerials for microwave heating H05B 6/72)

Definition statement

This place covers:

an electrical conductor or array of conductors that radiates signal energy (transmitting) or collects signal energy (receiving); it's a transducer between a guided electromagnetic wave e.g. in a coaxial cable, waveguide, stripline and an electromagnetic wave in free space; the reciprocity relation is valid; the antenna is a passive linear reciprocal device That part of a transmitting or receiving system that is designed to radiate or to receive electromagnetic waves.

Relationships with other classification places

H01P: Waveguides; Resonators; Lines, or other Devices of the Waveguide Type

H01R: Line connectors; current collectors

H03H: Impedance networks

H03H 2/005: coupling circuits between transmission lines and antennas; H03H 7/38: impedance-matching networks

H04B: Transmission

H04B 1/3833: hand-held transceivers

H04B 1/3838: with reducing RF exposure

H04B 5/0018. near-field transmission using leaky cable

H04B 7/02 and subgroups: diversity systems

H04B 7/06: at transmitting station

H04B 7/08: at receiving station

H04B 7/14: Relay systems

H04B 7/26: Capacity expanding techniques

H04B 17/00 and subgroups: monitoring, testing

H04Q: Selecting

H04Q7/36: Cells layout

H04Q7/3607: with adaptive channel assignment

H04Q7/3615: with steered beams

H05K: Printed circuits; Casings or constructional details of electric apparatus; manufacture

H05K 9/00: screening against electric or magnetic fields

G01R: Measuring electric/magnetic variables

G01R 29/10: radiation diagrams of antennas; antenna testing

G01R 29/105: using anechoic chamber

G02B: Optical elements

G02B 1/005 : photonic crystals

G01S: Radio direction-finding; radio navigation; determining distance or velocity; locating

G01S 7/2813: modification of radiation pattern for cancelling noise or interfering signals

G01S 7/40: means for calibrating or monitoring

G06K: Recognition and presentation of data; record carriers; handling record carriers

G06K 19/07749: transponder cards without electrical contacts

References

Informative references

Attention is drawn to the following places, which may be of interest for search:

Microwave radiators for near-field therapeutic treatment	A61N 5/04
Apparatus for testing aerials or for measuring aerial characteristics	G01R
Waveguides	H01P
Radiators or aerials for microwave heating	H05B 6/72

H01Q 1/00

Details of, or arrangements associated with, aerials (arrangements for varying orientation of directional pattern H01Q 3/00)

Definition statement

This place covers:

Structural details or features of antennas not dependent on electric operation and applicable to more than one type of antenna. However, structural details or features described with reference to an antenna of a particular type are classified in the group or sub-group appropriate to that type. This implies that any class under H01Q 1/00 should normally be accompanied by another class specifying the antenna type and/or working principle.

References

Informative references

Attention is drawn to the following places, which may be of interest for search:

Arrangements for varying orientation of directional pattern	H01Q 3/00

H01Q 1/002

{Protection against seismic waves, thermal radiation or other disturbances, e.g. nuclear explosion; Arrangements for improving the power handling capability of an aerial (cooling H01Q 1/02)}

Definition statement

This place covers:

Power handling capability means efficiency. Also effects due to high-power use, e.g. multipaction, (passive) intermodulation, as far as it relates to antennas, are to be classified here.

Illustrative example of subject-matter classified in this group:

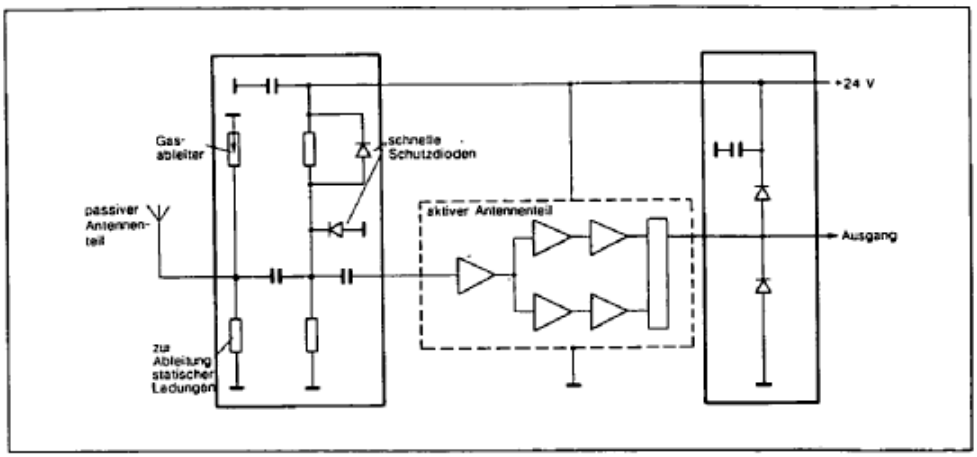

References

Informative references

Attention is drawn to the following places, which may be of interest for search:

Cooling	H01Q 1/02

H01Q 1/005

{Damping of vibrations; Means for reducing wind-induced forces (damping of vibrations in general F16F)}

Definition statement

This place covers:

Also covered by this group: reduction of mechanical deformations of an antenna, mast, etc.

Illustrative example of subject-matter classified in this group:

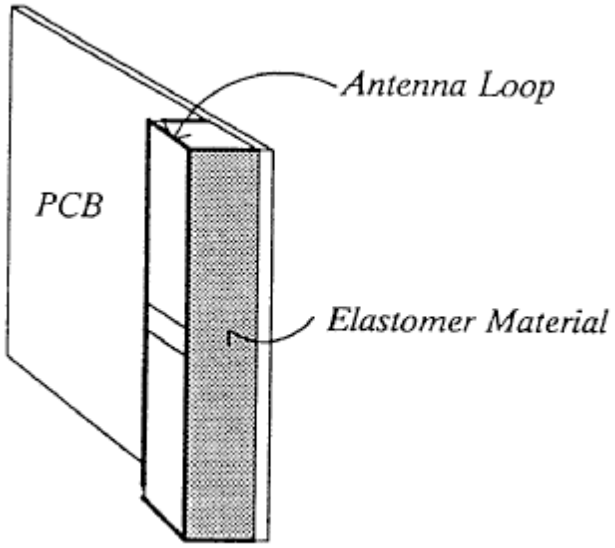

References

Informative references

Attention is drawn to the following places, which may be of interest for search:

Damping of vibrations in general	F16F

H01Q 1/007

{specially adapted for indoor communication}

Definition statement

This place covers:

Indoor coverage with distributed antennas. 'Indoor' is to be interpreted in a broad sense, e.g. inside an airplane, room, building.

Illustrative example of subject-matter classified in this group:

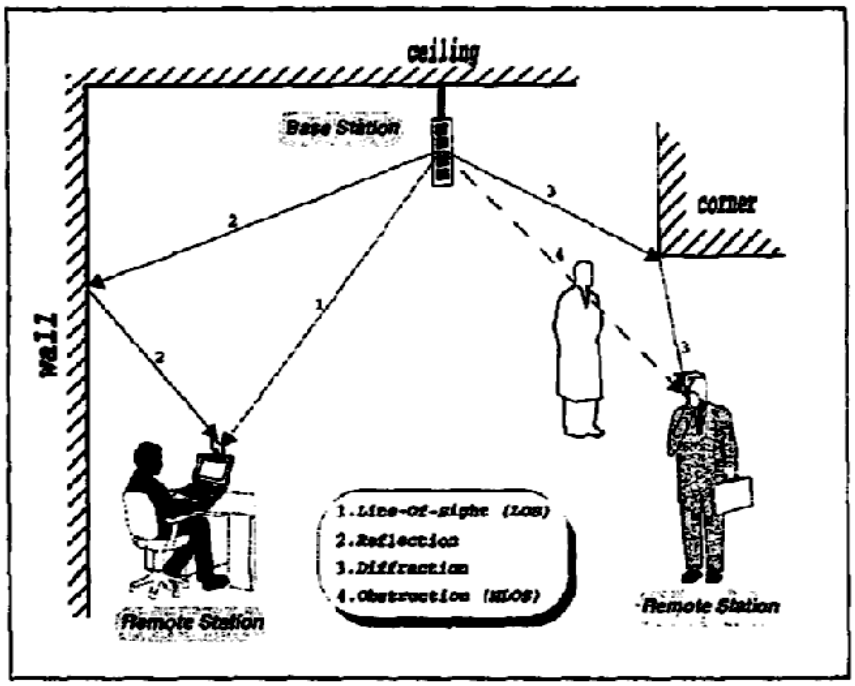

Figure 1. Sketch of important indoor propagation phenomenon.

H01Q 1/02

Arrangements for de-icing; Arrangements for drying-out; {Arrangements for cooling; Arrangements for preventing corrosion (radomes H01Q 1/42)}

Definition statement

This place covers:

Heating for removing snow or ice, for example used to blow droplets of water of the radome of a horn radiator in an earth station antenna. Cooling of T/R modules (see also H01Q 21/0025 Modular arrays).

Illustrative example of subject-matter classified in this group:

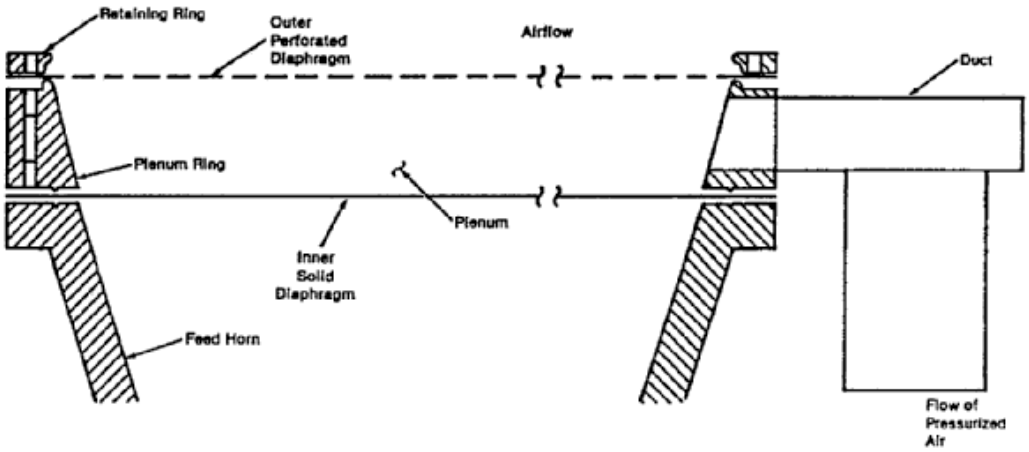

The **Double-Diaphragm Radome** includes a solid diaphragm at the mouth of a feed horn surmounted by a perforated diaphragm. Pressurized air in the plenum between the diaphragms flows out through the perforations.

References

Informative references

Attention is drawn to the following places, which may be of interest for search:

Radomes	H01Q 1/42

H01Q 1/04

Adaptation for subterranean or subaqueous use

Definition statement

This place covers:

In a borehole, tunnel, underground or underwater.

Illustrative example of subject-matter classified in this group:

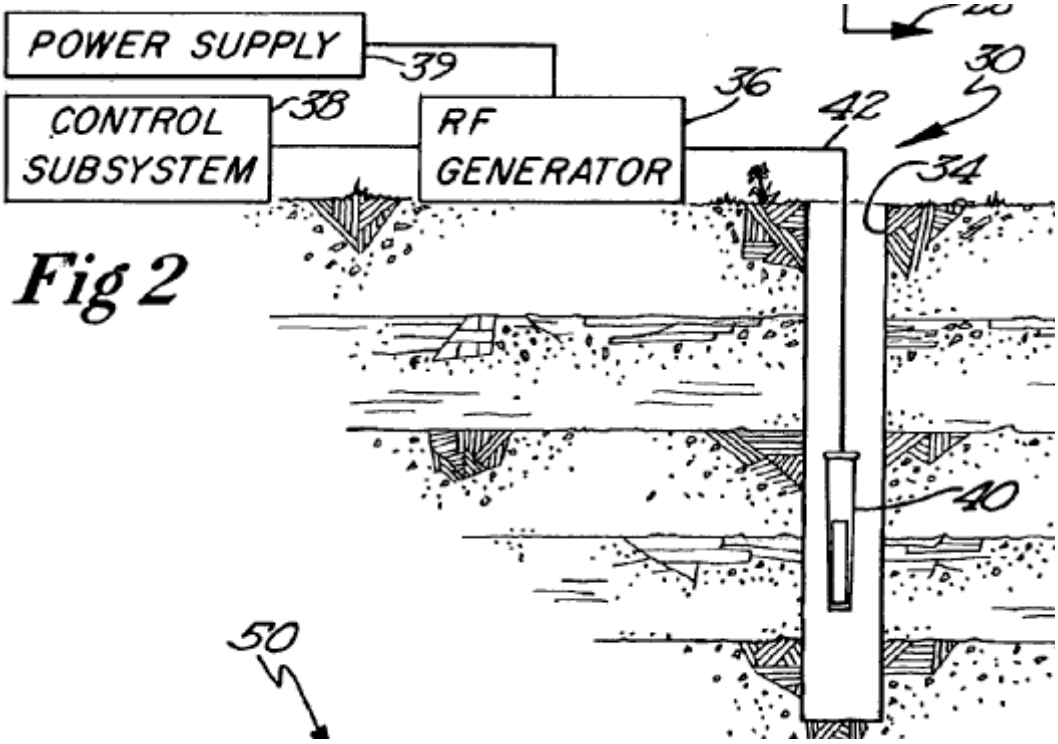

H01Q 1/06

Means for the lighting or illuminating of aerials, e.g. for purpose of warning

Definition statement

This place covers:

Originally used for lamps on masts; now also used for a LED on an antenna of a mobile phone. See the class F21S 8/00 as lighting devices for signalling; lamps on antennas or powerlines; antenna markers.

Illustrative example of subject-matter classified in this group:

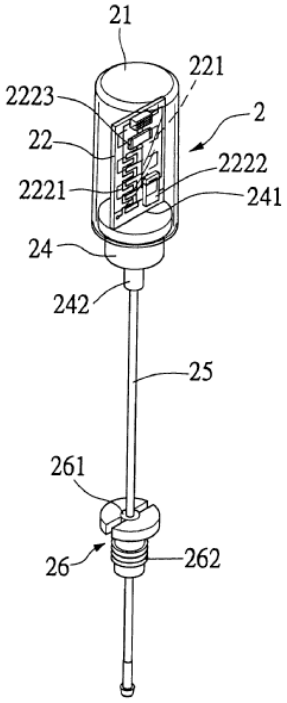

H01Q 1/08

Means for collapsing aerials or parts thereof; {Collapsible aerials} ({collapsible supports H01Q 1/1235} ; collapsible loop aerials H01Q 7/02; {collapsible helical aerials H01Q 11/086; collapsible reflecting surfaces H01Q 15/161, H01Q 15/20} ; collapsible H-aerials or Yagi aerials H01Q 19/04)

Definition statement

This place covers:

For example:

Illustrative example of subject-matter classified in this group:

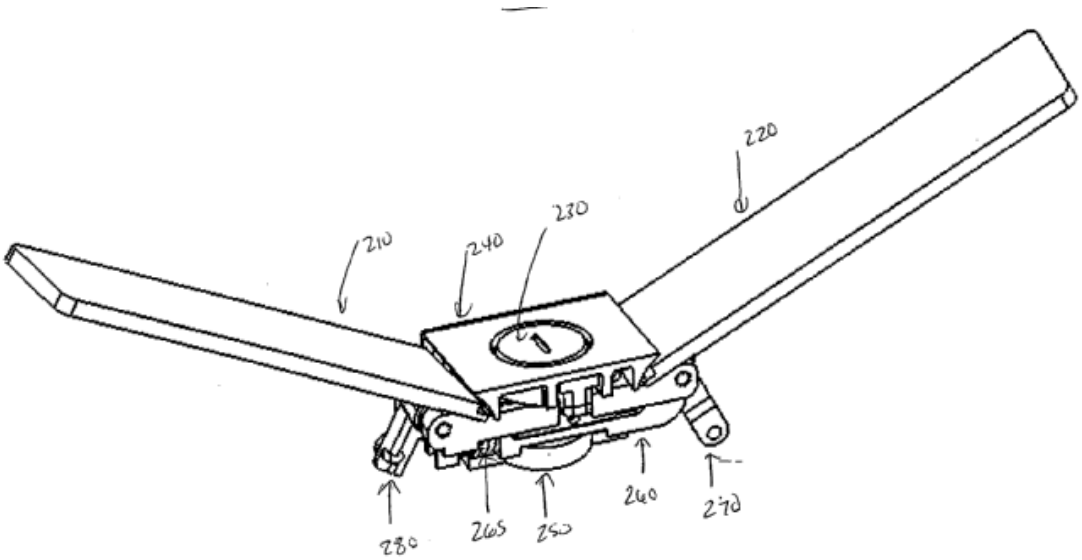

References

Informative references

Attention is drawn to the following places, which may be of interest for search:

Collapsible supports	H01Q 1/1235
Collapsible loop aerials	H01Q 7/02
Collapsible helical aerials	H01Q 11/086
Collapsible reflecting surfaces	H01Q 15/161, H01Q 15/20
Collapsible H-aerials or Yagi aerials	H01Q 19/04

Special rules of classification

Not used for the extractable antennas as used on mobile phones, nor for the clamm-shell phones with integrated antennas.

H01Q 1/081

{Inflatable antennas}

Definition statement

This place covers:

For example:

Illustrative example of subject-matter classified in this group:

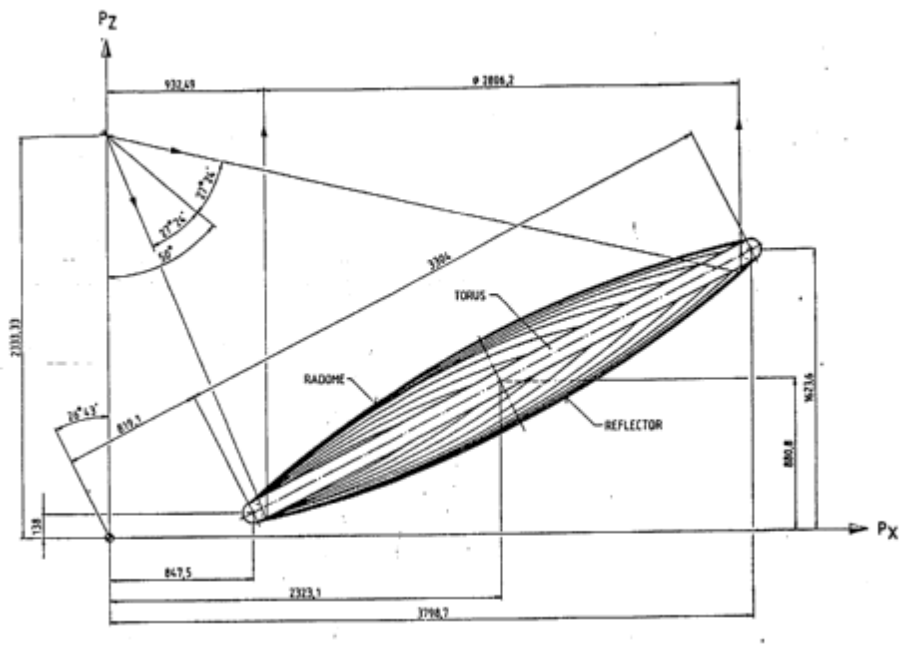

H01Q 1/082

{Balloon antennas (balloon supported antennas H01Q 1/1292)}

Definition statement

This place covers:

For example:

Illustrative example of subject-matter classified in this group:

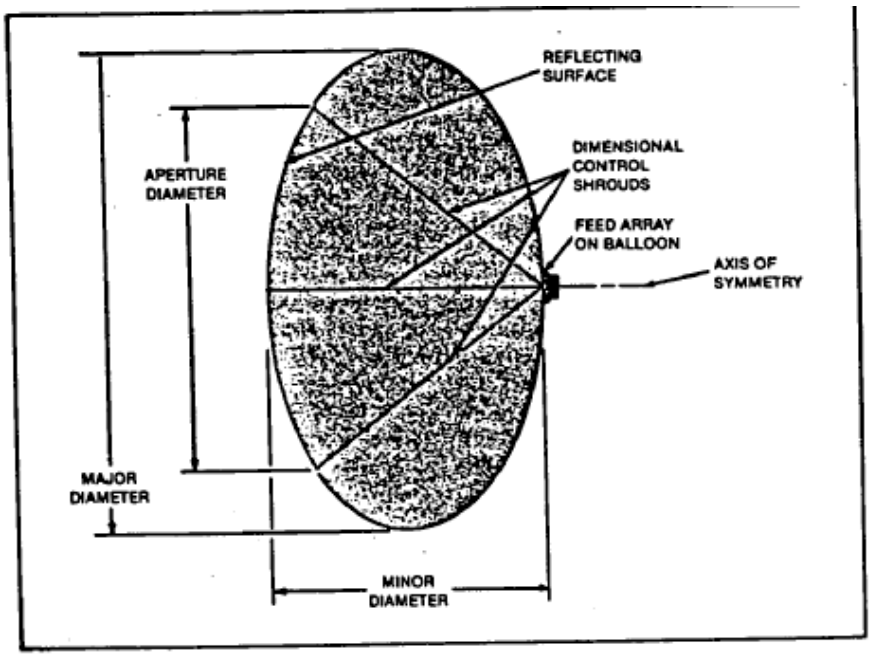

Ellipsoidal Balloon Antenna has its feedpoint on the surface of the ellipsoid outside the balloon, simplifying balloon deployment and feed support. Dielectric shrouds may be used locally to adjust the shape of the balloon and to maintain the feed distance at its optimum value.

References

Informative references

Attention is drawn to the following places, which may be of interest for search:

Balloon supported antennas	H01Q 1/1292

H01Q 1/084

{Pivotable antennas (mechanical movement of aerial or aerial system for changing or varying the orientation or the shape of the directional pattern H01Q 3/02; adjustment of angle between two radiating elements H01Q 9/12)}

Definition statement

This place covers:

Using (normally) a hinge.

Illustrative example of subject-matter classified in this group:

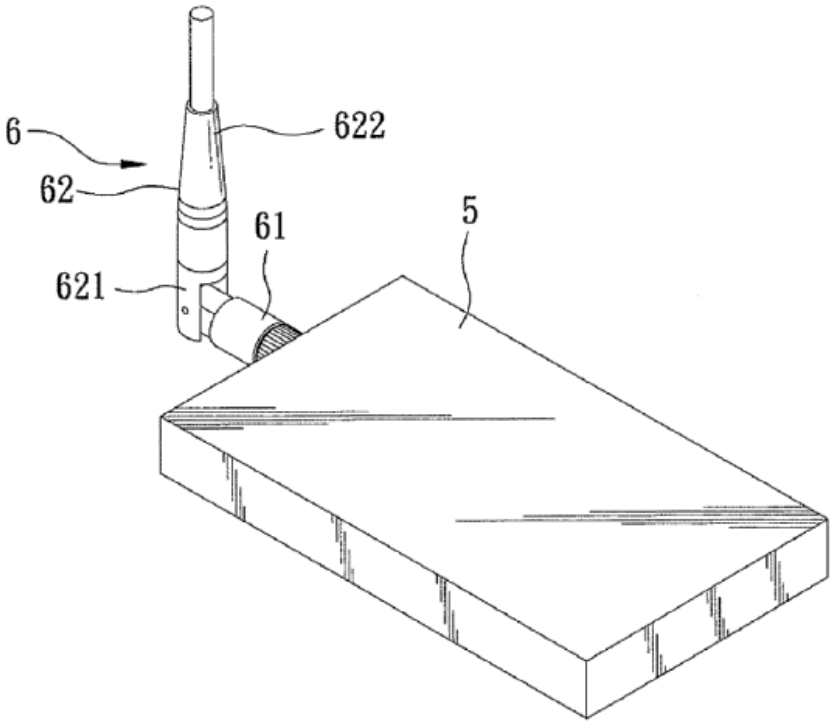

References

Informative references

Attention is drawn to the following places, which may be of interest for search:

Mechanical movement of aerial or aerial system for changing or varying the orientation or the shape of the directional pattern	H01Q 3/02
Adjustment of angle between two radiating elements	H01Q 9/12

H01Q 1/085

{Flexible aerials; Whip aerials with a resilient base}

Definition statement

This place covers:

For example:

Traditional whip antenna with a mounting coil for a vehicle, rubber duck antenna (monopole coil wrapped in rubber cover).

Illustrative example of subject-matter classified in this group:

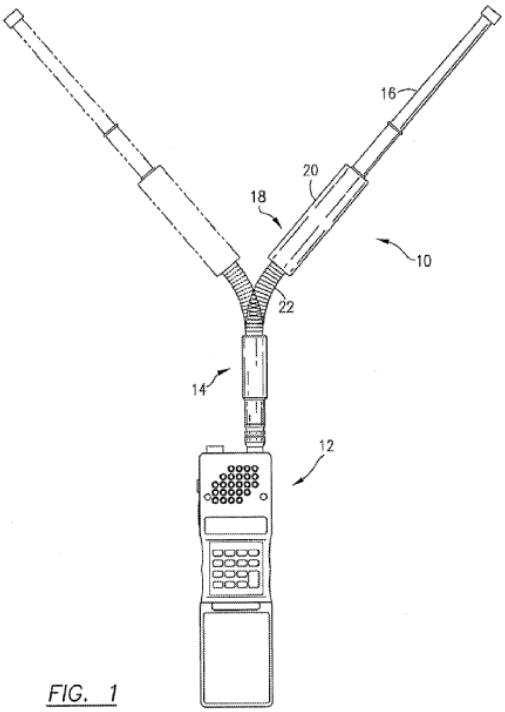

FIG. 1

H01Q 1/087

{Extensible roll- up aerials}

Definition statement

This place covers:

Tape measure used as an antenna with variable length; antennas used on a vehicle that can be (electrically) extended by means of a tape-measure like conductor, push-pull wire, etc.

Illustrative example of subject-matter classified in this group:

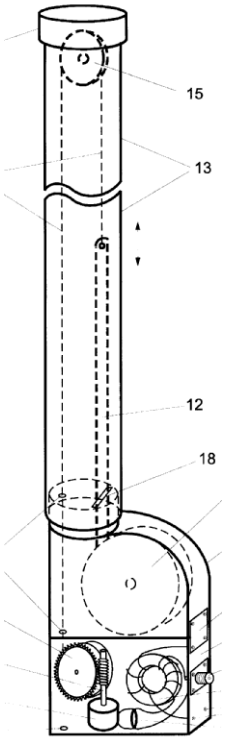

H01Q 1/088

{Quick-releasable antenna elements}

Definition statement

This place covers:

For example:

Illustrative example of subject-matter classified in this group:

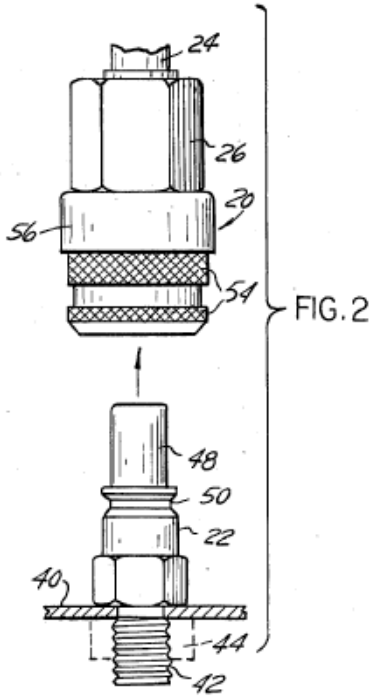

References

Informative references

Attention is drawn to the following places, which may be of interest for search:

Using clamps or clips	F16B 9/023
The stud, pin or spigot having two resilient parts on its opposite ends in order to connect two element	F16B 21/08

H01Q 1/10

Telescopic elements

Definition statement

This place covers:

Thin hollow metallic tubes/pipes that can be pushed into one another; telescoping tubing (former active group for telescopic car or mobile antennas).

Illustrative example of subject-matter classified in this group:

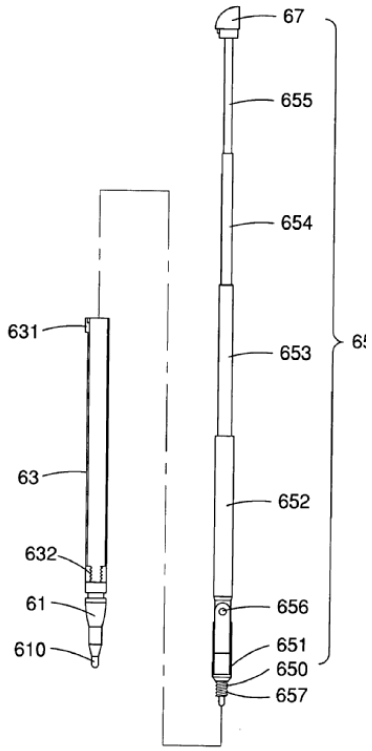

H01Q 1/103

{Latching means; ensuring extension or retraction thereof}

Definition statement

This place covers:

Extension/retraction by motor; BNC/bajonet type of releasable connecting arrangements.

Illustrative example of subject-matter classified in this group:

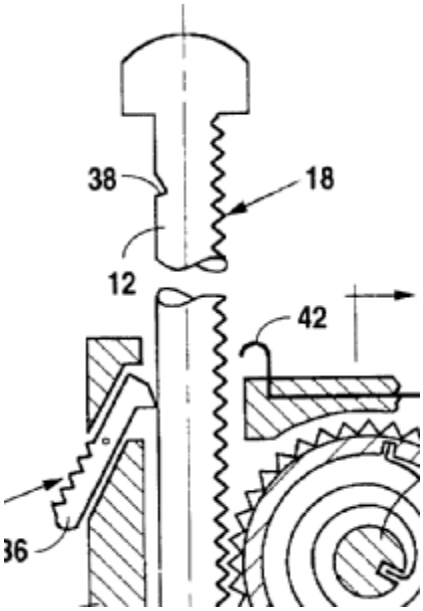

H01Q 1/106

{Means for locking or protecting against unauthorized extraction}

Definition statement

This place covers:

For example:

Illustrative example of subject-matter classified in this group:

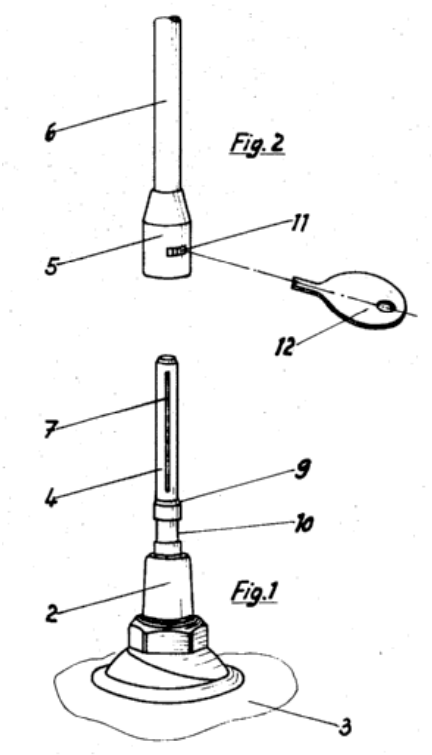

H01Q 1/12

Supports; Mounting means ({for the purpose of scanning H01Q 3/00; mounting structure for reflecting surfaces H01Q 15/14; Towers, masts, or poles E04H 12/00} ; supporting conductors in general H02G 7/00)

Definition statement

This place covers:

Any support related to an antenna; lower groups have turned into mobile telecoms usage.

Illustrative example of subject-matter classified in this group:

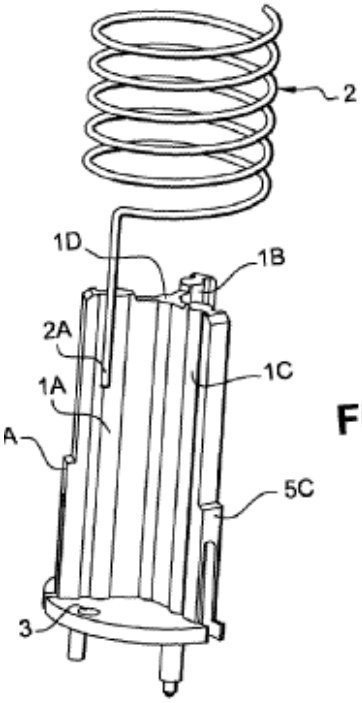

Fig. 2

References

Informative references

Attention is drawn to the following places, which may be of interest for search:

For the purpose of scanning	H01Q 3/00
Mounting structure for reflecting surfaces	H01Q 15/14
Towers, masts, or poles	E04H 12/00
Supporting conductors in general	H02G 7/00

H01Q 1/1207

{for fastening a rigid aerial element}

Definition statement

This place covers:

Details of coupling fastening devices by engagement/disengagement.

Illustrative example of subject-matter classified in this group:

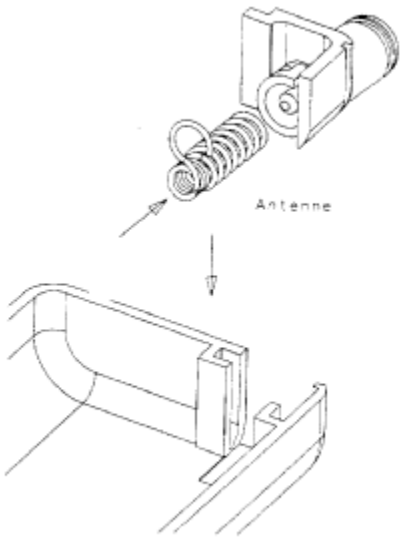

References

Informative references

Attention is drawn to the following places, which may be of interest for search:

Details of coupling devices operated by engagement or disengagement of coupling parts	H01R 13/703

H01Q 1/1214

{through a wall}

Definition statement

This place covers:

For example: through the vehicle body of automobiles. Mounting through the roof of another object, e.g. vehicle, house, housing.

Illustrative example of subject-matter classified in this group:

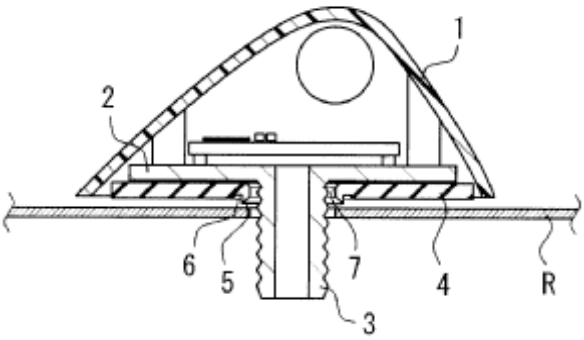

H01Q 1/1221

{onto a wall}

Definition statement

This place covers:

Wall mounted, also onto house roofs or tile roofs. If the wall is penetrated, it should be classified in H01Q 1/1214.

Illustrative example of subject-matter classified in this group:

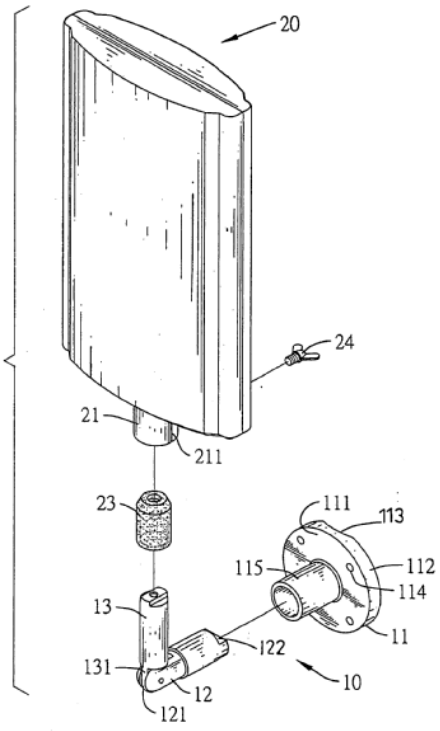

H01Q 1/1228

{on a boom (coupling of tubular pipes F16B 7/04)}

Definition statement

This place covers:

Boom is to be interpreted as a supporting tubular pipe; cross-section of this pipe can be circular, rectangular, etc.

Illustrative example of subject-matter classified in this group:

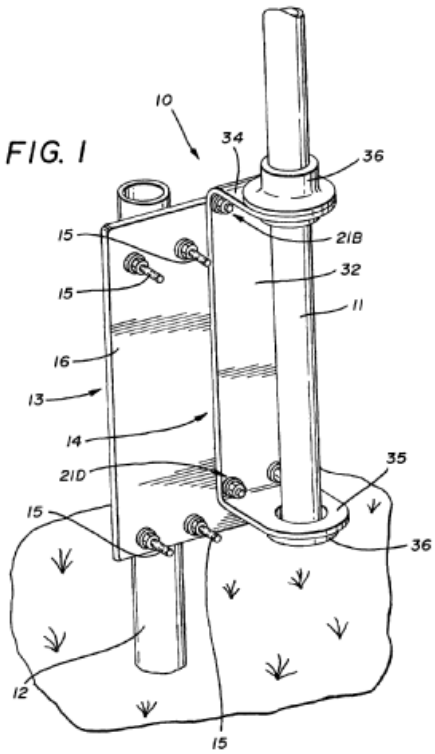

References

Informative references

Attention is drawn to the following places, which may be of interest for search:

Coupling of tubular pipes	F16B 7/04

H01Q 1/1235

{Collapsible supports; Means for erecting a rigid antenna}

Definition statement

This place covers:

Tripods; vehicles for telescopic masts.

Illustrative example of subject-matter classified in this group:

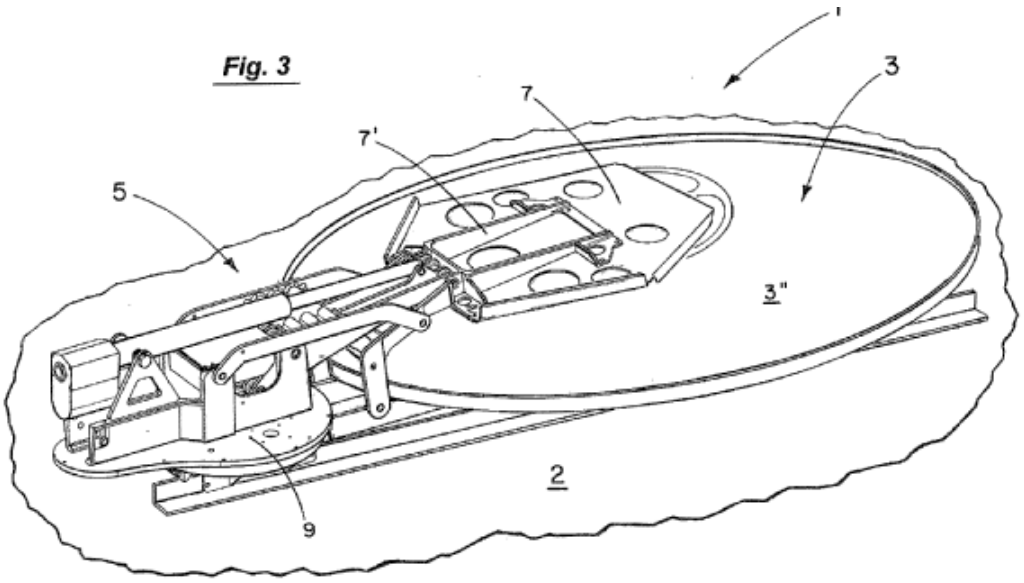

References

Informative references

Attention is drawn to the following places, which may be of interest for search:

Where the road or rail vehicle is only used as transportation means	H01Q 1/3216

H01Q 1/1242

{Rigid masts specially adapted for supporting an aerial}

Definition statement

This place covers:

Tower, mast, pylon, pole, post: a self-supporting mast as lattice, or a concrete mast or guyed mast with guy cables for anchoring.

Illustrative example of subject-matter classified in this group:

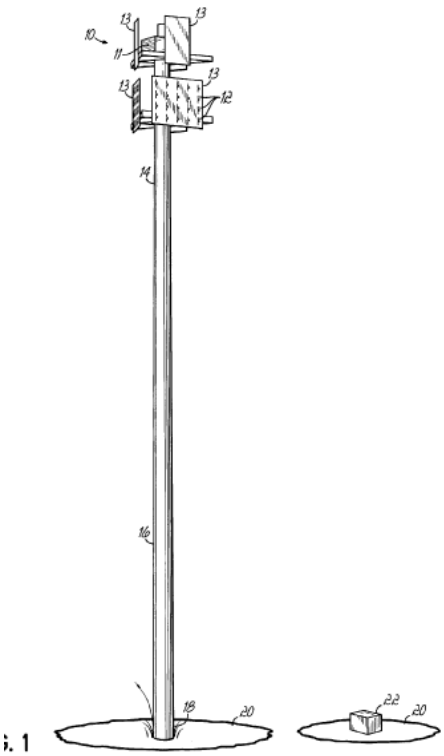

References

Informative references

Attention is drawn to the following places, which may be of interest for search:

Structures made of specified materials, of metal	E04H 12/08
Pre-stressed structures	E04H 12/16

H01Q 1/125

{Means for positioning (stabilising H01Q 1/18; remotely controlled positioning H01Q 3/005)}

Definition statement

This place covers:

Antenna aiming; pointing the antenna to a fixed target by mechanical movement; sometimes also called tracking, i.e. means motion given to the major lobe of an antenna with the intention that a selected moving target, e.g. satellite, be contained within the major lobe. Collimation means adjusting accurately the line of sight, 'making parallel' However, scanning (a repetitive motion given to the major lobe of an antenna) in H01Q 3/10.

Illustrative example of subject-matter classified in this group:

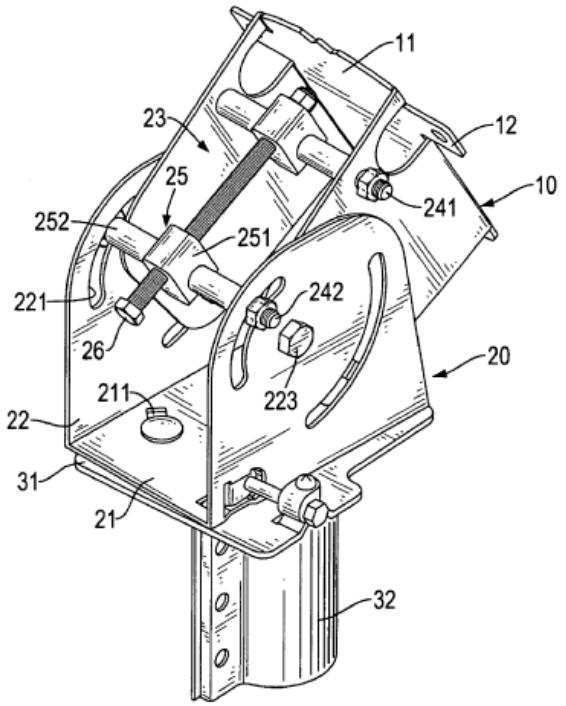

References

Informative references

Attention is drawn to the following places, which may be of interest for search:

Stabilising	H01Q 1/18
Remotely controlled positioning	H01Q 3/005

H01Q 1/1257

{using the received signal strength (direction finding G01S 3/38; diversity H04B 7/10)}

Definition statement

This place covers:

The strength of the received signal is monitored, as used as a parameter for steering the positioning means; normally feed back processing is used.

Illustrative example of subject-matter classified in this group:

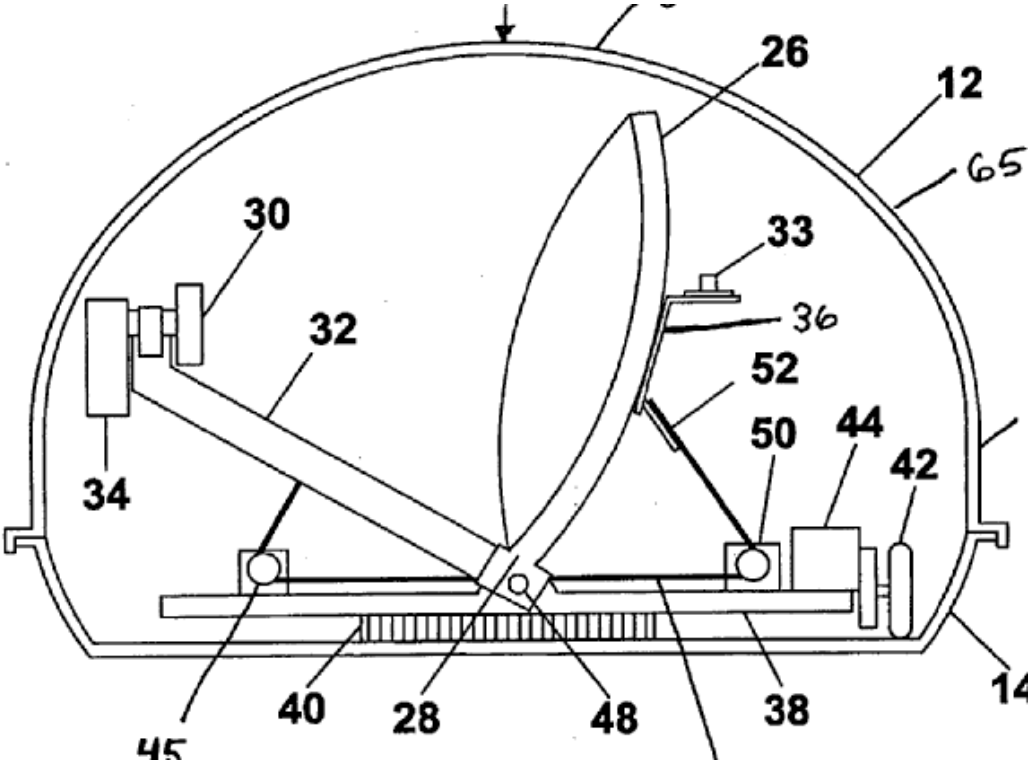

References

Informative references

Attention is drawn to the following places, which may be of interest for search:

Direction finding	G01S 3/38
Diversity	H04B 7/10

H01Q 1/1264

{Adjusting different parts or elements of an aerial unit}

Definition statement

This place covers:

Not frequently used; large overlap with the classes H01Q 3/02 and groups thereunder.

Illustrative example of subject-matter classified in this group:

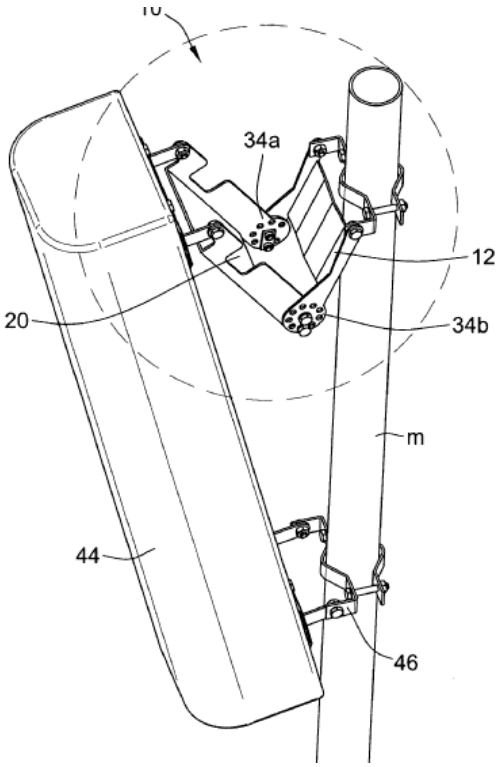

H01Q 1/1271

{for mounting on windscreens}

Definition statement

This place covers:

Glass antenna; window-; window pane-; on-vehicle glass antenna.

Illustrative example of subject-matter classified in this group:

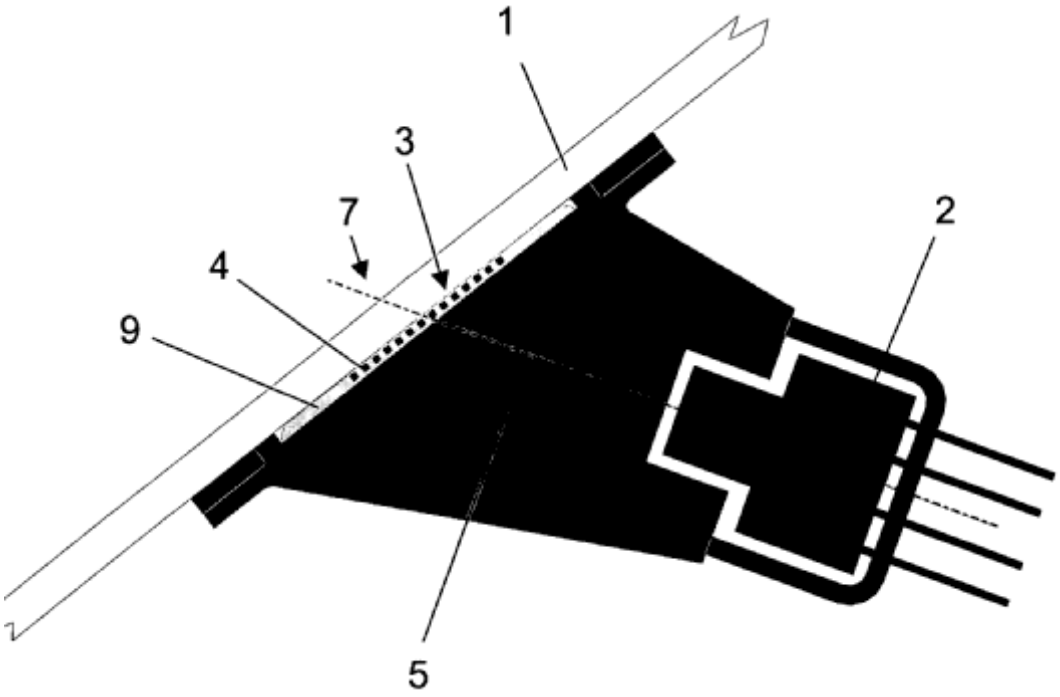

Special rules of classification

US class: 343/713. It appears these kinds of applications are classified by the JPO under H01Q 1/32.

H01Q 1/1278

{in association with heating wires or layers}

Definition statement

This place covers:

Illustrative example of subject-matter classified in this group:

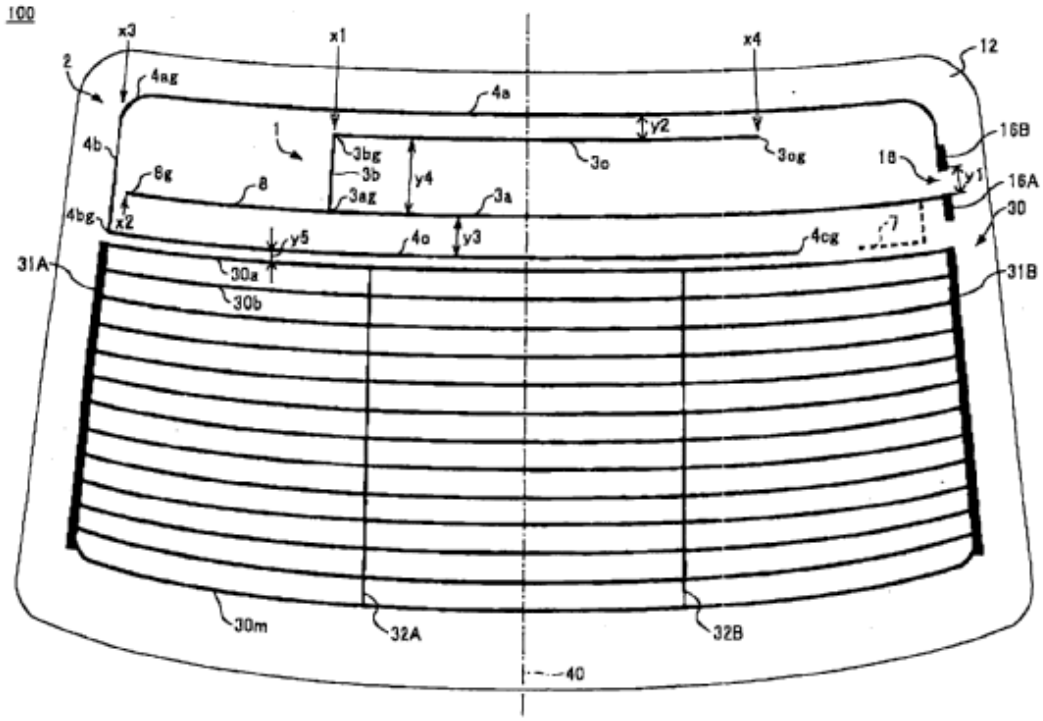

References

Informative references

Attention is drawn to the following places, which may be of interest for search:

Heating arrangements specially adapted for transparent or reflecting areas, e.g. for demisting or de-icing windows, mirrors or vehicle windshields	H05B 3/84

H01Q 1/1285

{with capacitive feeding through the windscreen}

Definition statement

This place covers:

Can be capacitive feeding through the complete glass layer, or partly through the glass layer, e.g. from within the layer to one outside thereof.

Illustrative example of subject-matter classified in this group:

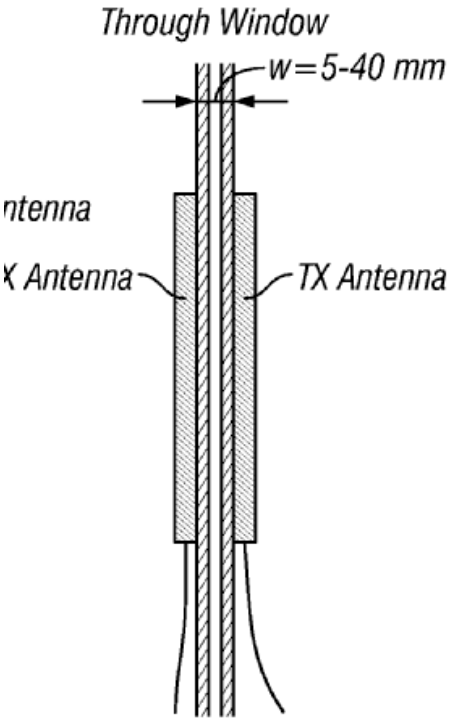

H01Q 1/1292

{for mounting on balloons}

Definition statement

This place covers:

Not frequently used; overlap with H01Q 1/082: the distinction is that in this class the balloon is only the support, whereas in H01Q 1/082 the balloon is the antenna.

Illustrative example of subject-matter classified in this group:

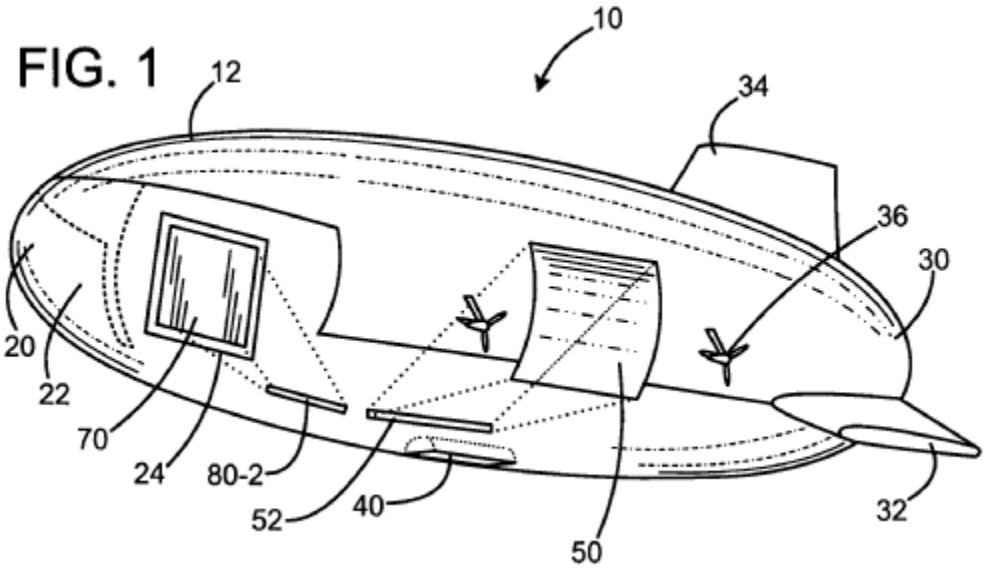

H01Q 1/14

for wire or other non-rigid radiating elements

Definition statement

This place covers:

Mechanical details for the so-called curtain antennas used in HF broadcast.

Illustrative examples of subject-matter classified in this group:

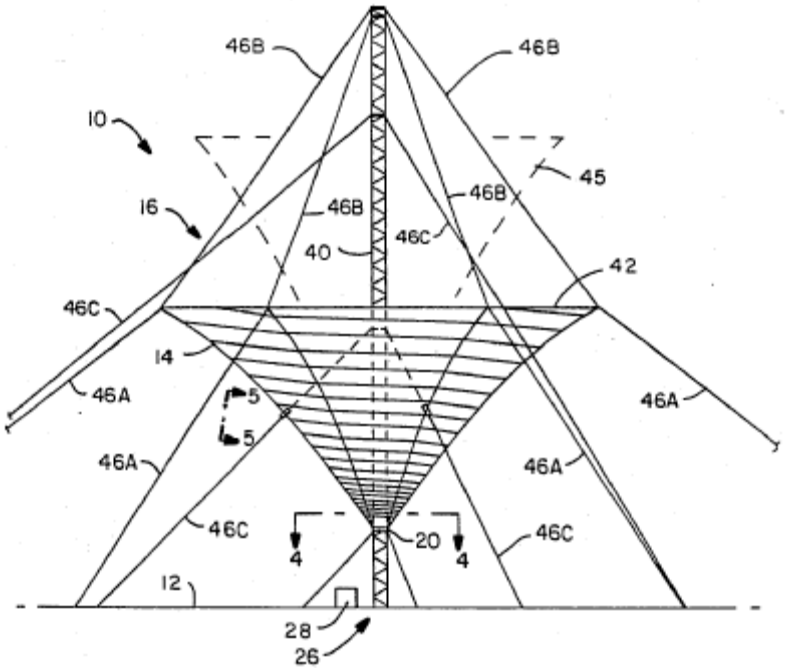

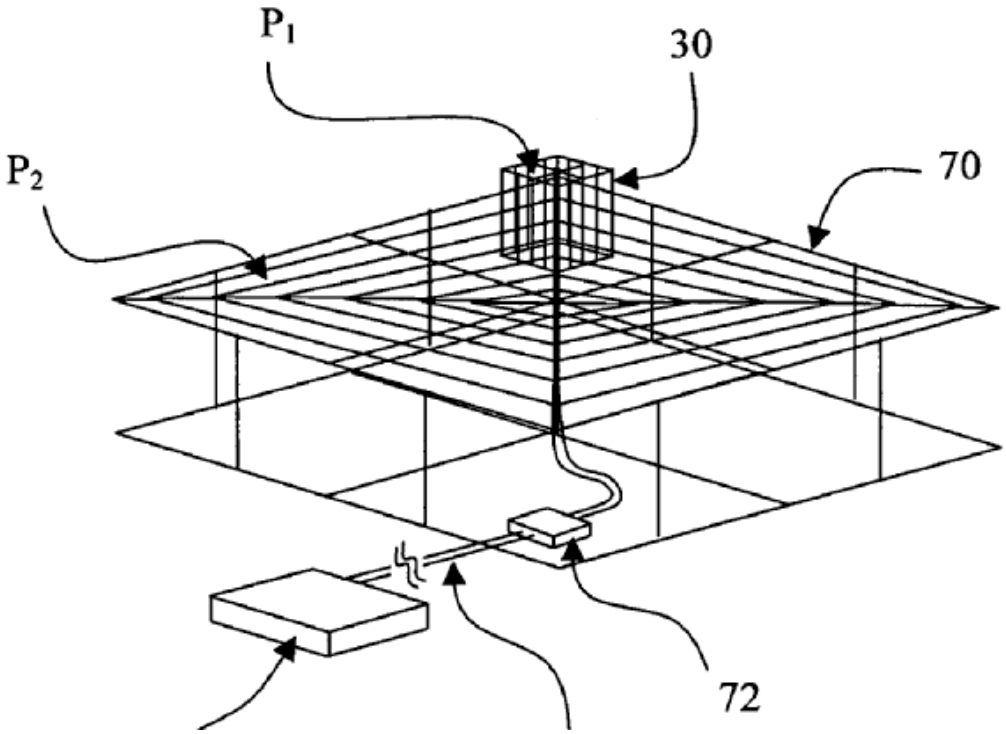

H01Q 1/16

Strainers, spreaders, or spacers

Definition statement

This place covers:

Illustrative example of subject-matter classified in this group:

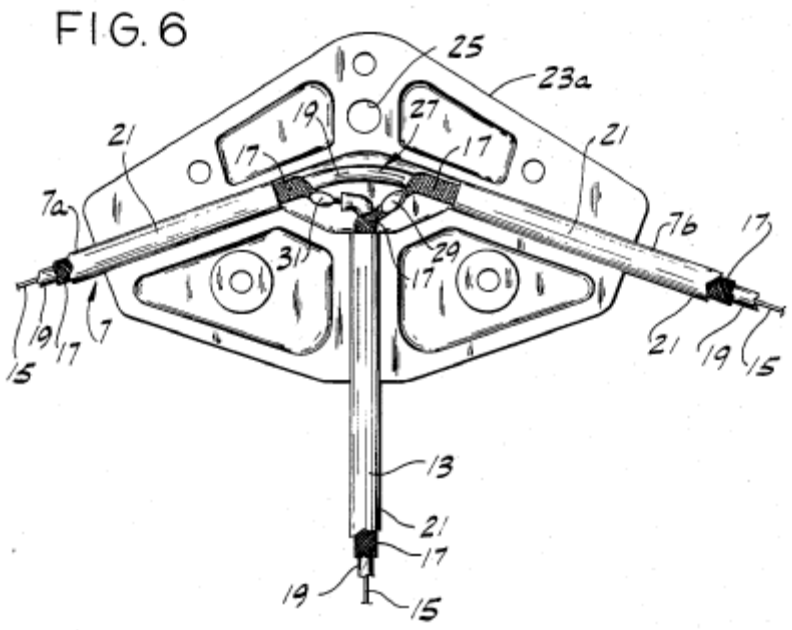

H01Q 1/18

Means for stabilising aerials on an unstable platform {(reducing wind-induced forces H01Q 1/005)}

Definition statement

This place covers:

The unstable platform can be a ship, or a tower which is bending due to wind forces. Often a gimbal is used.

Illustrative example of subject-matter classified in this group:

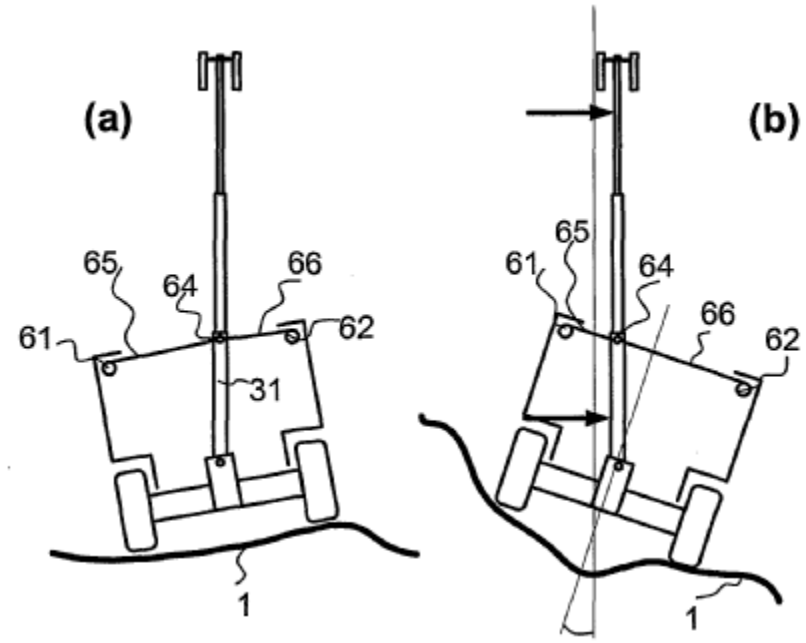

References

Informative references

Attention is drawn to the following places, which may be of interest for search:

Reducing wind-induced forces	H01Q 1/005

H01Q 1/185

{by electronic means (electronic scanning H01Q 3/26)}

Definition statement

This place covers:

Any depointing due to the moving platform is corrected for using electronic means.

Illustrative example of subject-matter classified in this group:

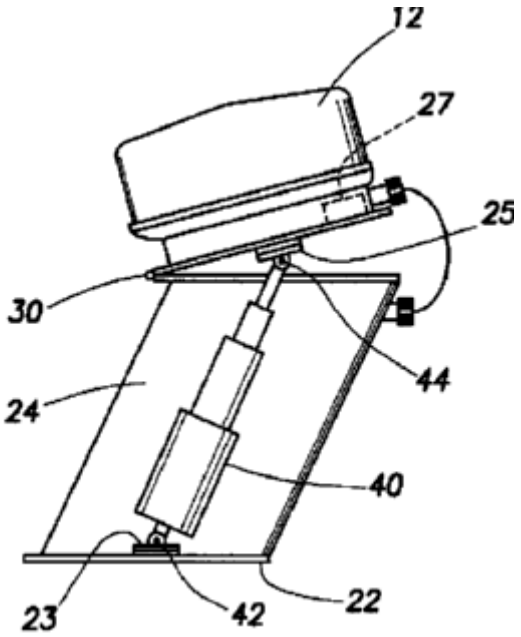

References

Informative references

Attention is drawn to the following places, which may be of interest for search:

Electronic scanning	H01Q 3/26

H01Q 1/20

Resilient mountings

Definition statement

This place covers:

Mechanical details of fixtures; normally used in conjunction with a monopole-like radiator (stems from old car-antennas with a resilient base, e.g. coil).

Illustrative example of subject-matter classified in this group:

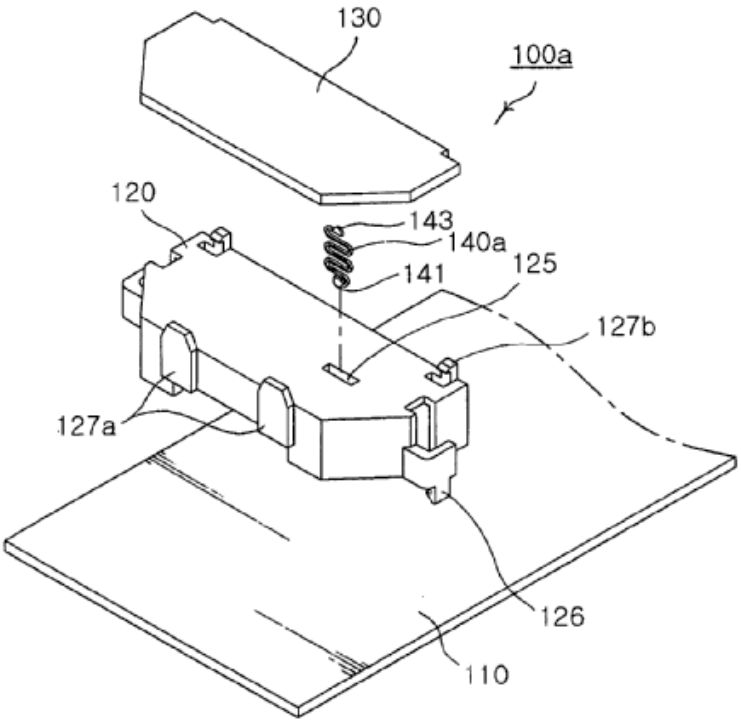

H01Q 1/22

by structural association with other equipment or articles {(portable transceivers H04B 1/3827)}

Definition statement

This place covers:

The antenna or antennas are mounted on something else; this something else is an item with a dedicated use: integration aspects of the antenna and the item.

Illustrative example of subject-matter classified in this group:

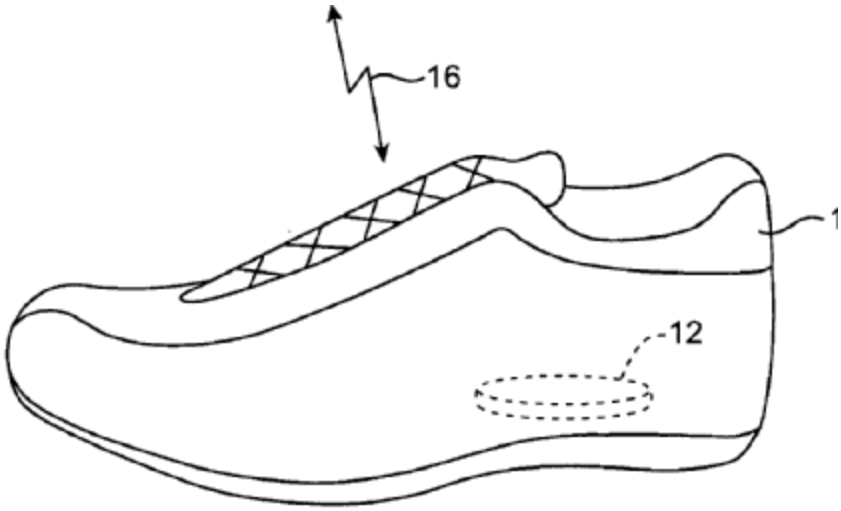

References

Informative references

Attention is drawn to the following places, which may be of interest for search:

Portable transceivers	H04B 1/3827

H01Q 1/2208

{associated with components used in interrogation type services, i.e. in systems for information exchange between an interrogator/reader and a tag/ transponder, e.g. in Radio Frequency Identification [RFID] systems (G06K 7/00 and G06K 19/00 take precedence)}

Definition statement

This place covers:

Antennas for a system of interrogator / reader which sends a unique identification (ID) to a tag which receives and sends back its stored information.

Illustrative example of subject-matter classified in this group:

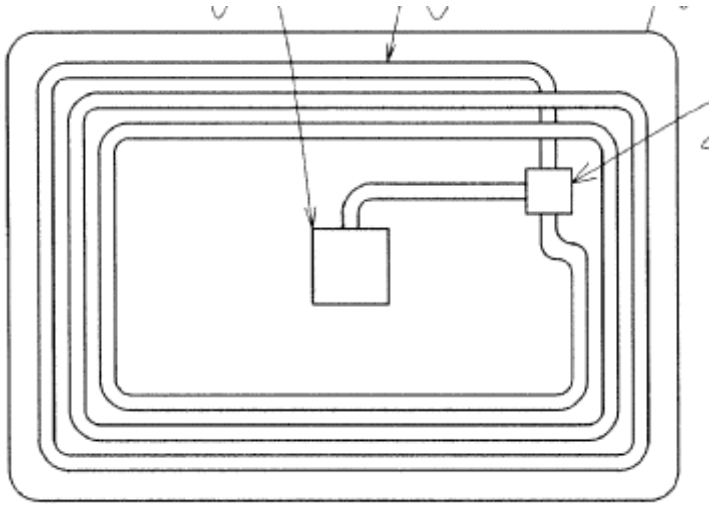

References

Limiting references

This place does not cover:

Methods or arrangements for sensing record carriers, e.g. for reading patterns	G06K 7/00
Record carrier for use with machines and with al least a part designed to carry digital markings	G06K 19/00

H01Q 1/2216

{used in interrogator/reader equipment}

Definition statement

This place covers:

Antennas for interrogation reader (stationary, portable or hand-held) depending on operating frequency such as e.g. loop or dipole antennas; also multi-frequency, multiple antennas; antenna arrays.

Special rules of classification

This class is normally accompanied with a class relating to the antenna type, e.g. slot, dipole, coil, etc.

H01Q 1/2225

{used in active tags, i.e. provided with its own power source or in passive tags, i.e. deriving power from RF signal}

Definition statement

This place covers:

Antenna types depending on operating frequencies. Inductively coupled as multilayer coils, wrapped around ferrite cores, or radiatively coupled as dipoles, folded dipoles/monopoles, short loops, bow-tie, patch antennas

Illustrative example of subject-matter classified in this group:

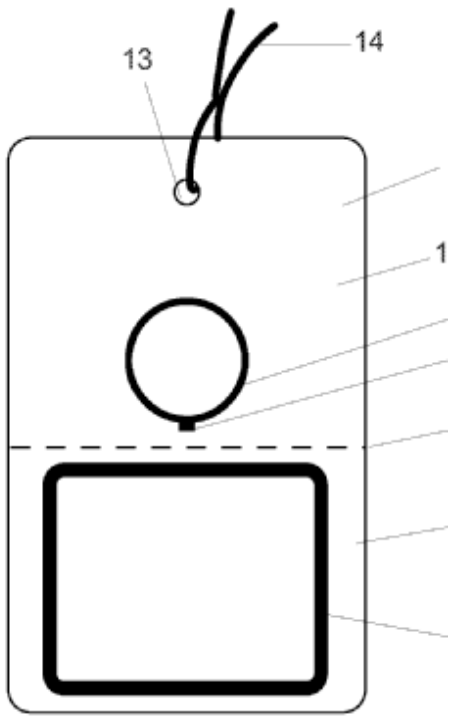

Special rules of classification

This class is normally accompanied with a class relating to the antenna type, e.g. slot, dipole, coil, etc.

H01Q 1/2233

{used in consumption-meter devices, e.g. electricity, gas or water meters (remote reading of utility meters G01D 4/002; transmission of measured values using a radio link in general G08C 17/02)}

Definition statement

This place covers:

Illustrative example of subject-matter classified in this group:

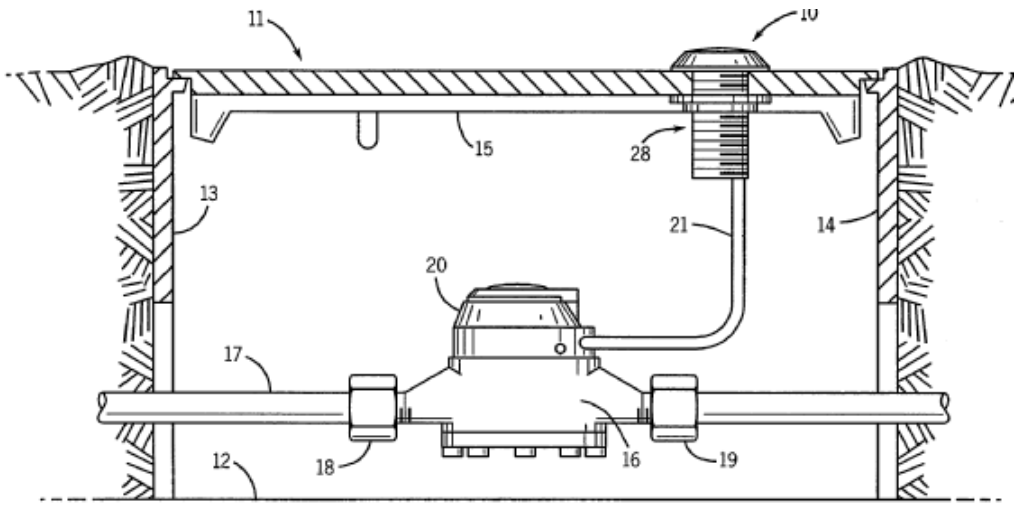

References

Informative references

Attention is drawn to the following places, which may be of interest for search:

Remote reading of utility meters	G01D 4/002
Transmission of measured values using a radio link in general	G08C 17/02

H01Q 1/2241

{used in or for vehicle tyres (tyres in general B60C 3/04)}

Definition statement

This place covers:

For monitoring pressure, wear, etc.

Illustrative example of subject-matter classified in this group:

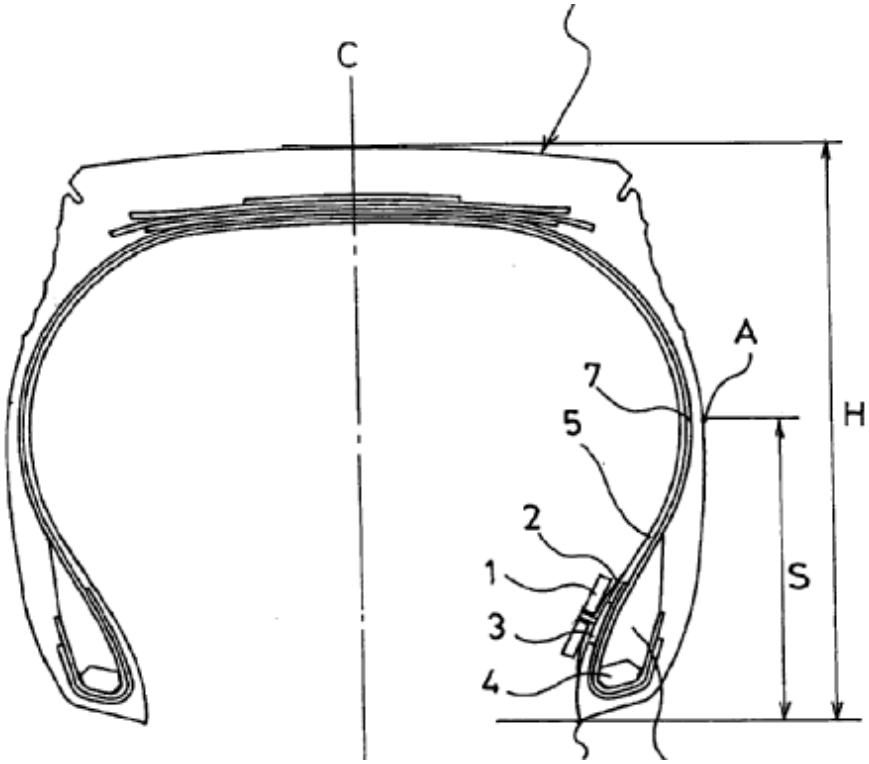

References

Informative references

Attention is drawn to the following places, which may be of interest for search:

Tyres in general	B60C 3/04

H01Q 1/225

{used in level-measurement devices, e.g. for level gauge measurement (level measuring with electromagnetic waves in general G01F 23/284)}

Definition statement

This place covers:

Normally a radar principle including time-of-flight is used to determine the distance between the radiating antenna the liquid or other material inside a container. This is to be used for details on the radiating antenna, not on other aspects for the measurement system (see G01F 23/284).

Illustrative example of subject-matter classified in this group:

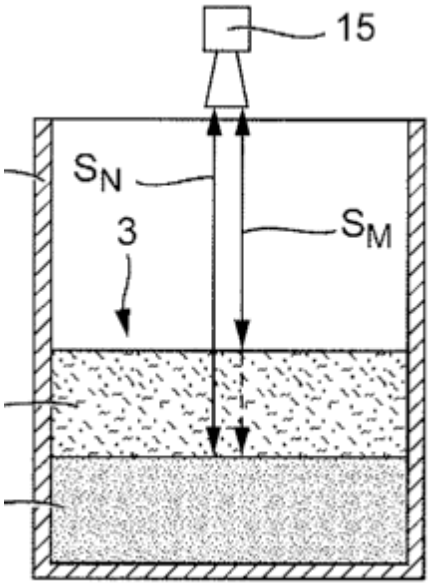

References

Informative references

Attention is drawn to the following places, which may be of interest for search:

Level measuring with electromagnetic waves in general	G01F 23/284

H01Q 1/2258

{used with computer equipment}

Definition statement

This place covers:

Antennas for computer equipment as laptops, notebooks, pdas, tablets, desktops or workstations.

Illustrative example of subject-matter classified in this group:

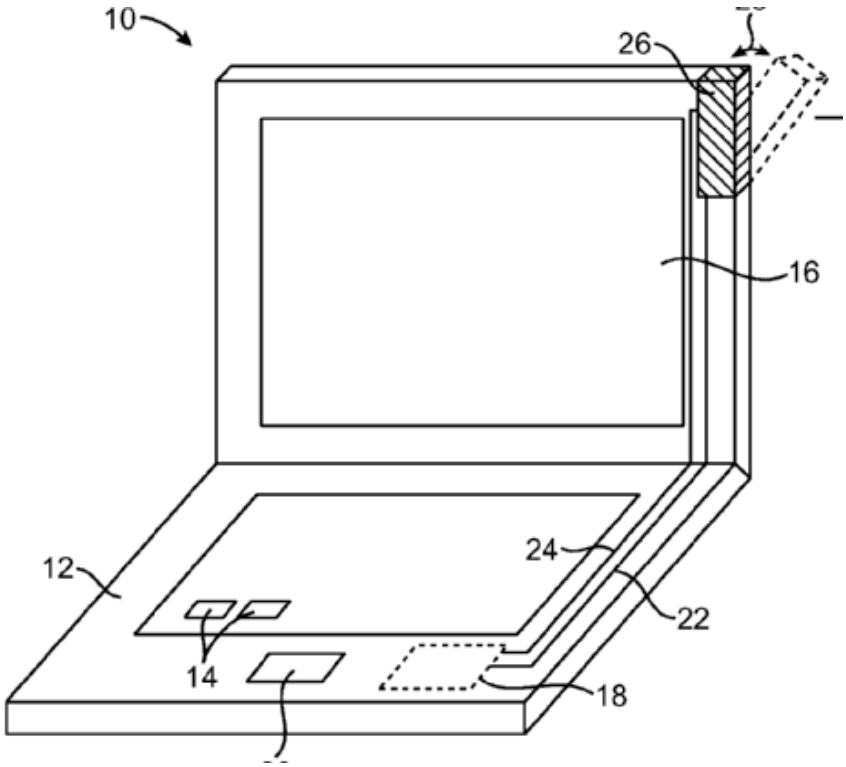

H01Q 1/2266

{disposed inside the computer}

Definition statement

This place covers:

Also antennas mounted in(side) a hinge are considered here.

Illustrative example of subject-matter classified in this group:

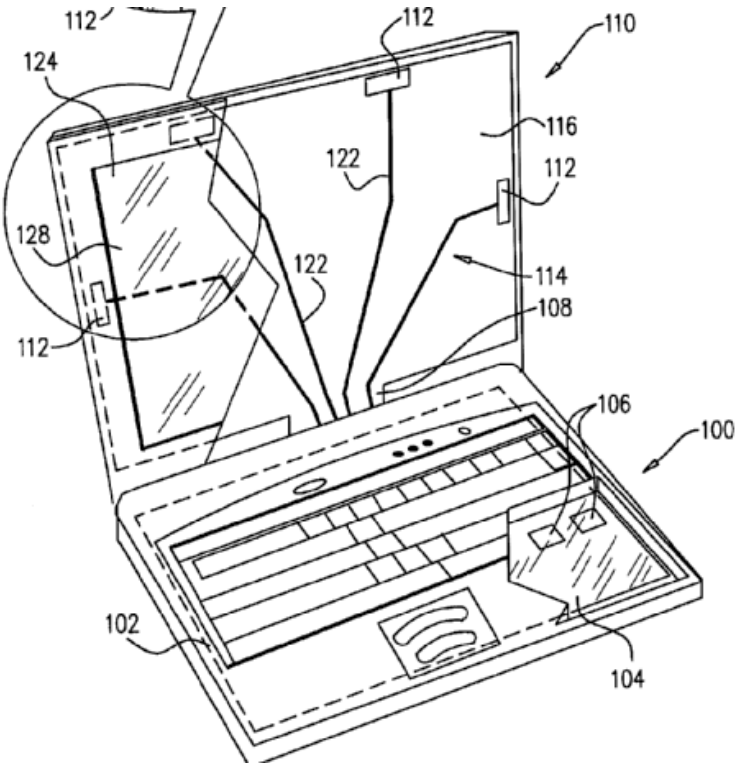

H01Q 1/2275

{associated to expansion card or bus, e.g. in PCMCIA, PC cards, Wireless USB}

Definition statement

This place covers:

Typically the expansion card is removable; this reflects more the use of the antenna.

Illustrative example of subject-matter classified in this group:

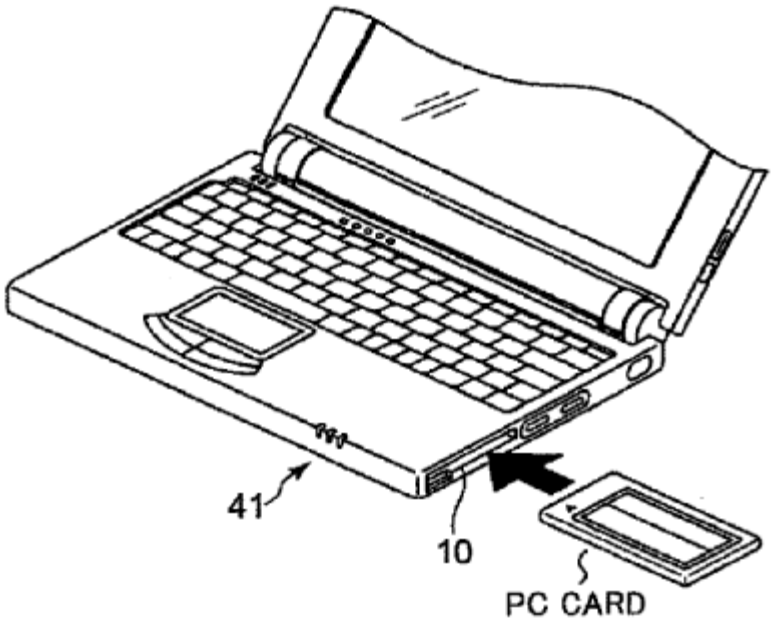

H01Q 1/2283

{mounted in or on the surface of a semiconductor substrate as a chip-type antenna or integrated with other components into an IC package (chip carriers for flat cards H01L 23/49855)}

Definition statement

This place covers:

A small-size antenna which has an antenna element buried in a dielectric chip or stacked on the surface of a dielectric chip, (Murata appears to be the major applicant here).

Illustrative example of subject-matter classified in this group:

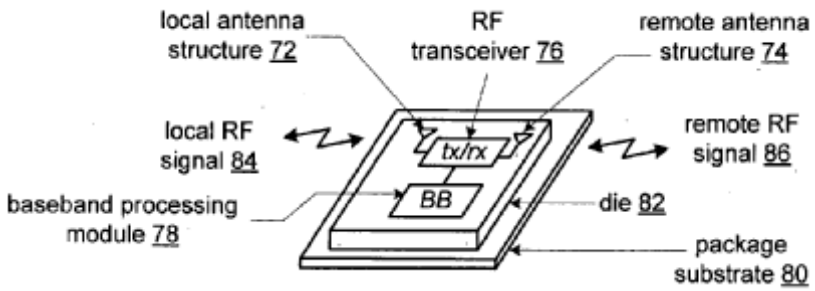

References

Informative references

Attention is drawn to the following places, which may be of interest for search:

Chip carriers for flat cards H01L 23/49855.

H01Q 1/2291

{used in bluetooth or WI-FI devices of Wireless Local Area Networks [WLAN] (H01Q 1/241 takes precedence; WLAN in general H04W)}

Definition statement

This place covers:

Antennas for a wireless system of access points as base stations and of clients with laptops, notebooks, PDA's, desktops or workstations.

Illustrative example of subject-matter classified in this group:

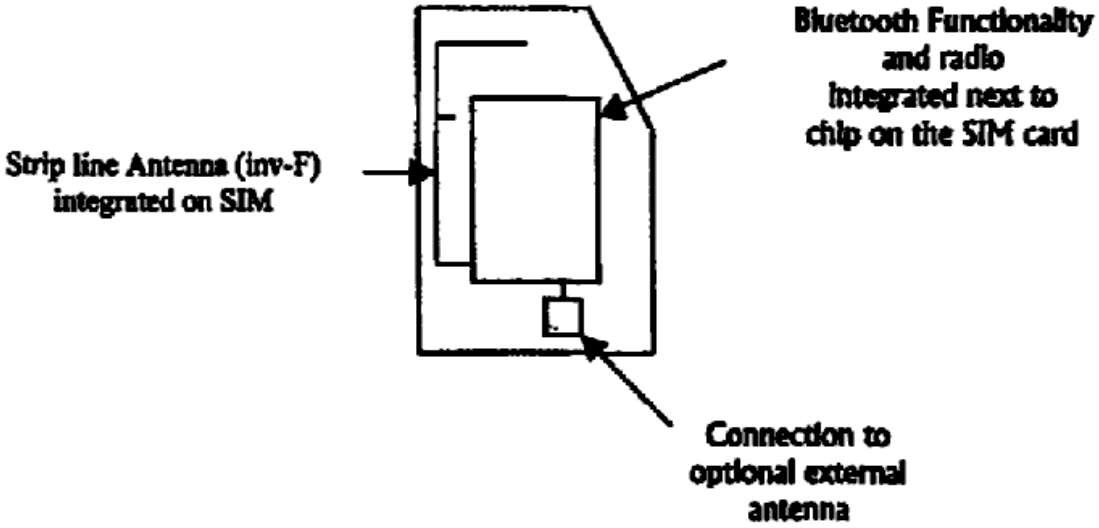

References

Limiting references

This place does not cover:

Receiving set used in mobile communications	H01Q 1/241
WLAN in general	H04W 84/12

Informative references

Attention is drawn to the following places, which may be of interest for search:

Specially adapted for indoor communication	H01Q 1/007

H01Q 1/24

with receiving set

Definition statement

This place covers:

Documents where antennas are in a transmitting/receiving set, i.e. a transceiver. “ “Receiving” here means actually receiving and/or transmitting.

Illustrative example of subject-matter classified in this group:

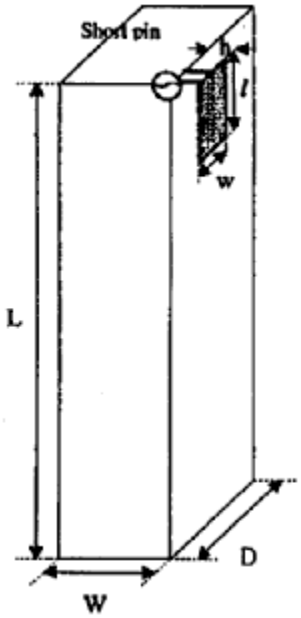

References

Informative references

Attention is drawn to the following places, which may be of interest for search:

Portable transceivers	H04B 1/3827
Hand-held transceivers	H04B 1/3833
Portable telephone sets, e.g. cordless phones, mobile phones or bar type handsets	H04M 1/0202

H01Q 1/241

{used in mobile communications, e.g. GSM (H01Q 1/247, H01Q 1/248 take precedence)}

Definition statement

This place covers:

GSM: Global System for Mobile Communication, also 3G and other telecommunications systems.

Illustrative example of subject-matter classified in this group:

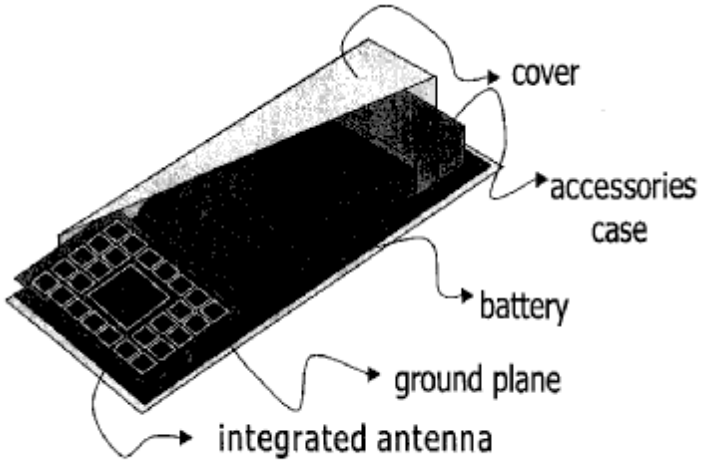

Fig. 1. Cellular phone layout with an integrated antenna employing EBG structures.

References

Limiting references

This place does not cover:

With frequency mixer, e.g. for direct satellite reception or Doppler radar	H01Q 1/247
Provided with an AC/DC converting device, e.g. rectennas	H01Q 1/248

H01Q 1/242

{specially adapted for hand-held use}

Definition statement

This place covers:

Hand-held here excludes wireless phone for domestic use. In mobile (read: cellular) telephones.

Illustrative example of subject-matter classified in this group:

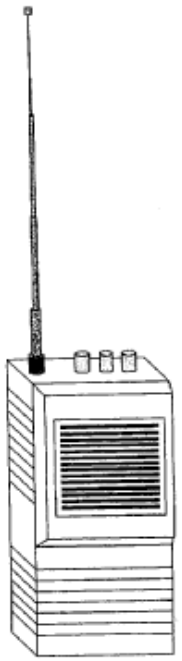

Figure 3. A monopole antenna, mounted on the top of a piece of portable equipment.

H01Q 1/243

{with built-in antennas}

Definition statement

This place covers:

Stored/located/contained within the housing. Also when integrated within the shell of the phone housing.

Illustrative example of subject-matter classified in this group:

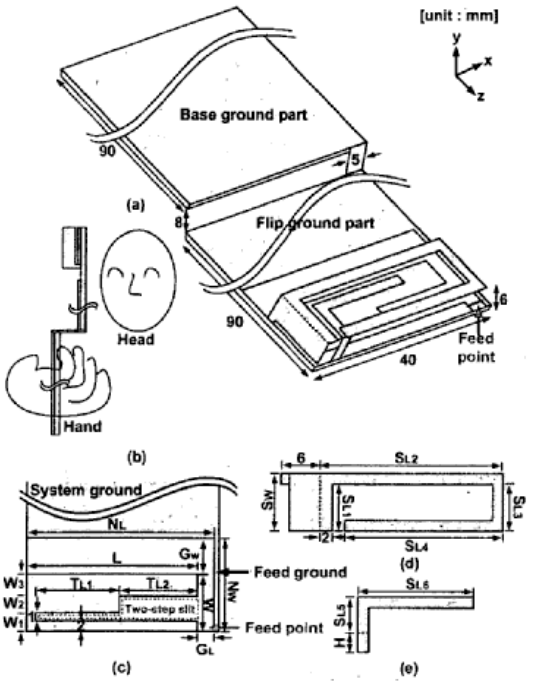

Fig. 1 (a) Geometry of the proposed antenna with a system ground, (b) side view, (c) main patch, (d) element-1, (e) element-2.

H01Q 1/244

{extendable from a housing along a given path}

Definition statement

This place covers:

Normally antenna is within the housing, but part of it can be extracted (extendable; extractable; pulled out; stored, pushed in, contained; passive, retract+). The device should be claimed/disclosed; isolated antennas in H01Q 1/08 or H01Q 1/10 (and subgroups).

Illustrative example of subject-matter classified in this group:

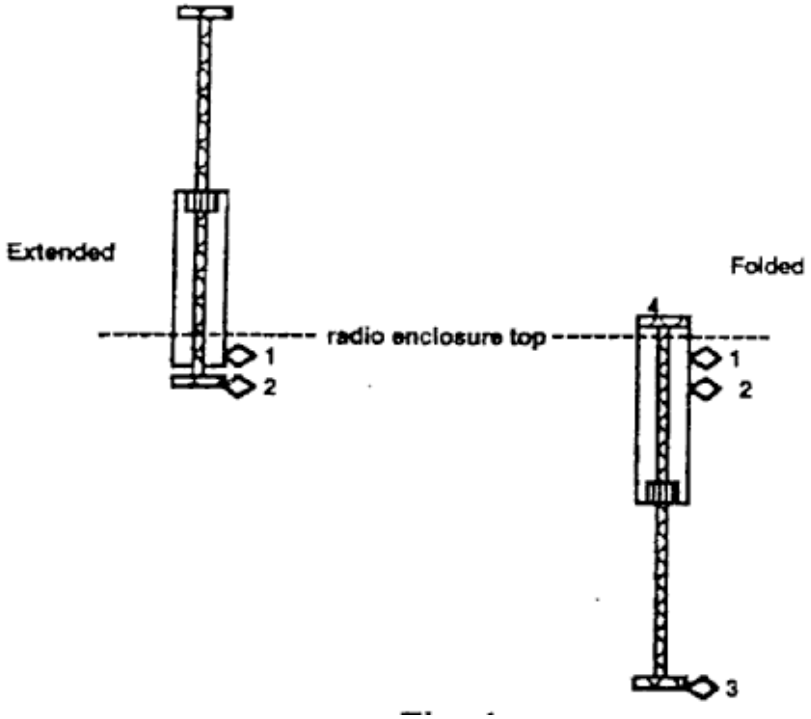

Special rules of classification

Antennas per se are classified in H01Q 1/10 and subgroups.

H01Q 1/245

{with means for shaping the antenna pattern, e.g. in order to protect user against rf exposure}

Definition statement

This place covers:

Health protection, RF exposure. Overlap in H04B: “protect user against rf exposure". This class is about measures that influence the shape of the pattern, with the aim of reducing RF exposure / absorption by the user.

Illustrative example of subject-matter classified in this group:

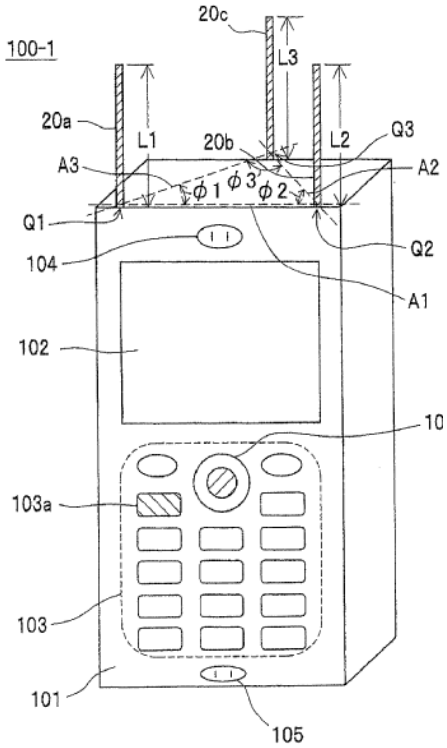

References

Informative references

Attention is drawn to the following places, which may be of interest for search:

Arrangements for reducing RF exposure to the user, e.g. by changing the shape of the transceiver while in use	H04B 1/3838

Special rules of classification

Power control after proximity detection (for example), should be in H04B.

H01Q 1/246

{specially adapted for base stations}

Definition statement

This place covers:

To be interpreted as base stations in generalised cells (macro / micro / pico).

Illustrative example of subject-matter classified in this group:

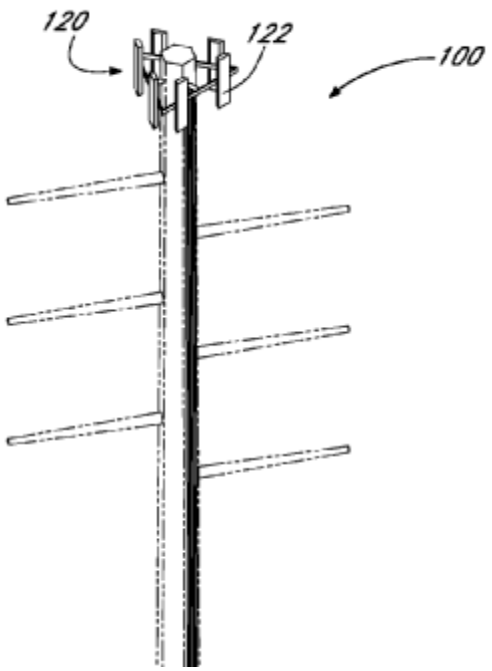

Synonyms and Keywords

In patent documents the following words are often used:

Cell station; hub station; cell site; cellular cell site; radio base station; homebase; central site, fixed site.

H01Q 1/247

{with frequency mixer, e.g. for direct satellite reception or Doppler radar (active antennas H01Q 23/00)}

Definition statement

This place covers:

As LNB (Low noise block converter) or LNC (Low Noise Converter) or LNA (Low Noise Amplifier) as feeder of reflector antennas.

Illustrative example of subject-matter classified in this group:

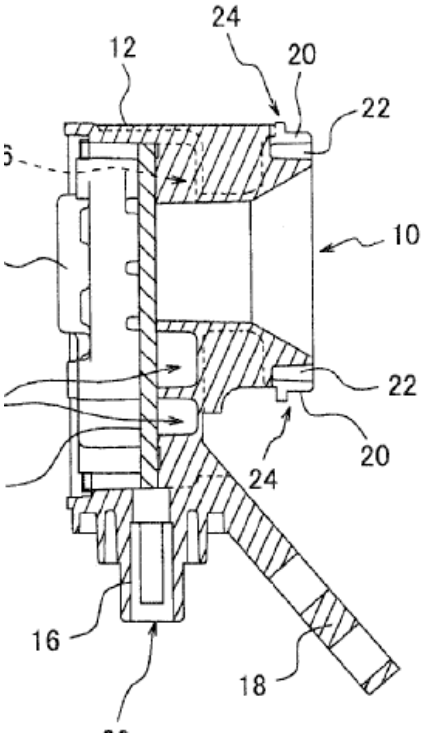

References

Informative references

Attention is drawn to the following places, which may be of interest for search:

Active antennas	H01Q 23/00
Located in a hollow waveguide	H03D 9/0641
Adaptations for transmission via a GHz frequency band, e.g. via satellite	H04N 7/20

H01Q 1/248

{provided with an AC/DC converting device, e.g. rectennas}

Definition statement

This place covers:

Rectifying antenna for microwave power transmission and conversion; antenna elements and rectifiers (diodes) are directly connected to produce a DC output; energy harvesting.

Illustrative example of subject-matter classified in this group:

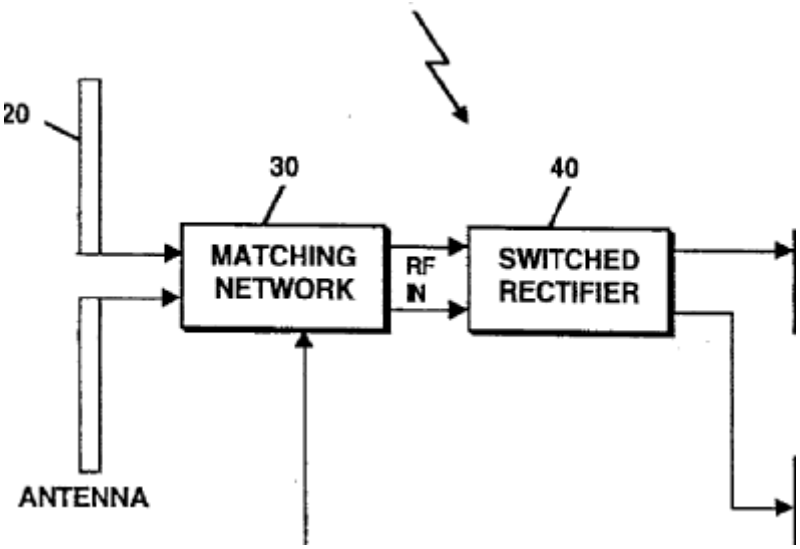

References

Informative references

Attention is drawn to the following places, which may be of interest for search:

Systems using reflection of radio waves, e.g. primary radar systems; Analogous systems	G01S 13/02

H01Q 1/26

with electric discharge tube

Definition statement

This place covers:

For example plasmas used for exciting waves; ionised gas columns excited by coil antenna at base.

Illustrative example of subject-matter classified in this group:

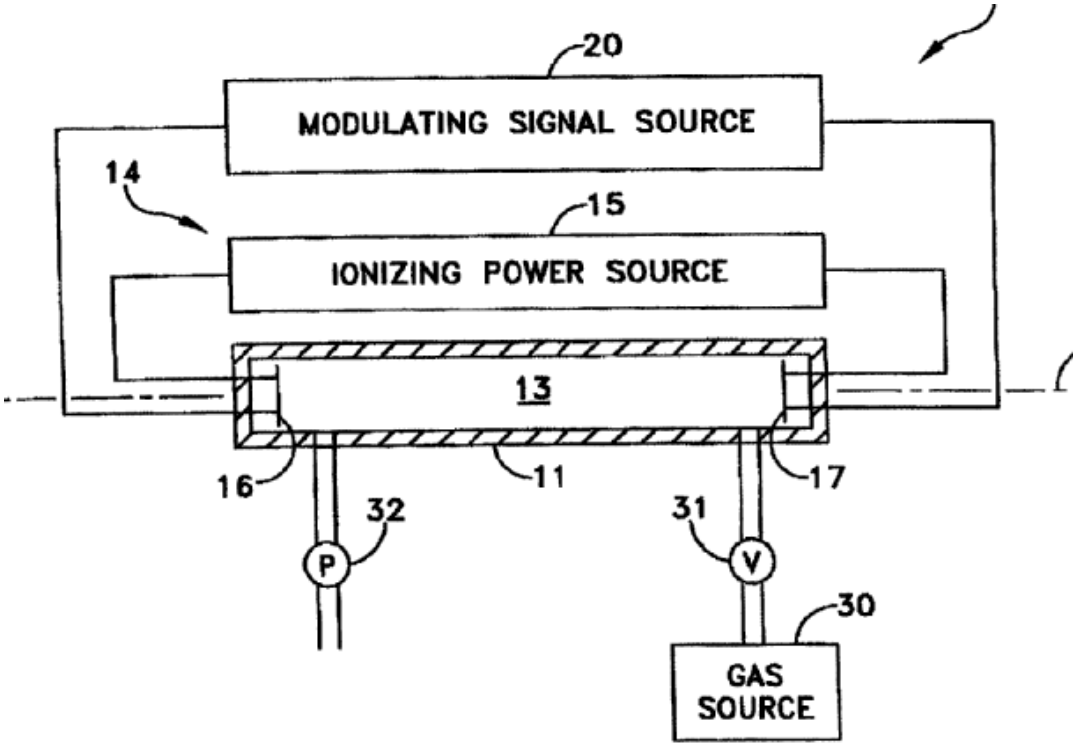

H01Q 1/27

Adaptation for use in or on movable bodies (H01Q 1/08, H01Q 1/12, H01Q 1/18 take precedence; {portable transceivers H04B 1/3827})

Definition statement

This place covers:

Illustrative example of subject-matter classified in this group:

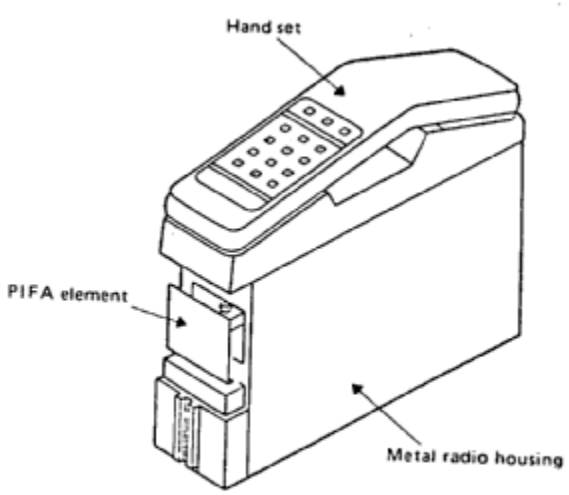

Fig. 1—Antenna configuration for over-the-shoulder type detachable transceiver unit (Type A).

References

Limiting references

This place does not cover:

Means for collapsing aerials or parts thereof	H01Q 1/08
Support; mounting means	H01Q 1/12
Means for stabilising aerials on an unstable platform	H01Q 1/18
Portable transceivers	H04B 1/3827

H01Q 1/273

{Adaptation for carrying or wearing by persons or animals}

Definition statement

This place covers:

Mostly wristwatch-type-, clock-, timepiece antennas; collars; necklaces.

Illustrative example of subject-matter classified in this group:

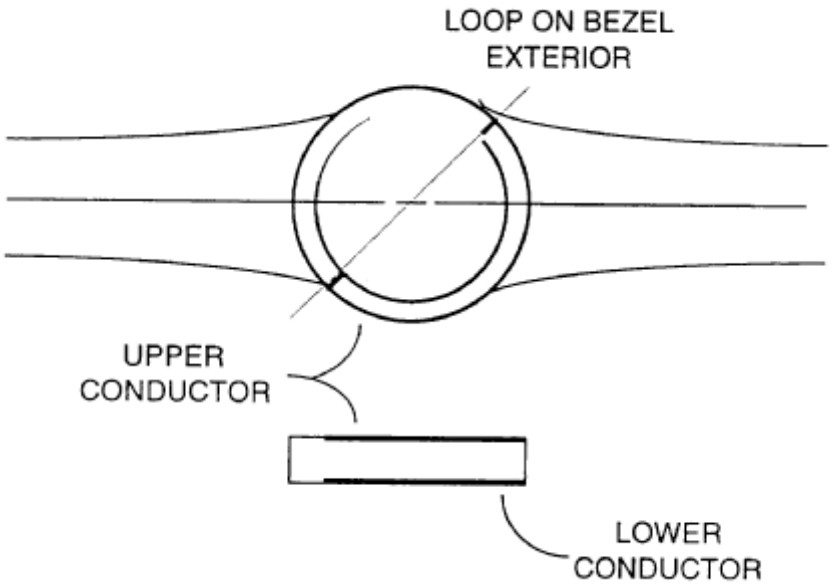

References

Informative references

Attention is drawn to the following places, which may be of interest for search:

Bracelets; Wrist-watch straps; Fastenings for bracelets or wrist-watch straps	A44C 5/00
Antennas attached to or as a component of clocks or watches	G04R 60/02, G04R 60/04, G04R 60/06
Transceivers carried on the body, e.g. in helmets	H04B 1/385

H01Q 1/276

{for mounting on helmets}

Definition statement

This place covers:

Military applications; use of these helmets by motor cycle drivers, soldiers.

Illustrative example of subject-matter classified in this group:

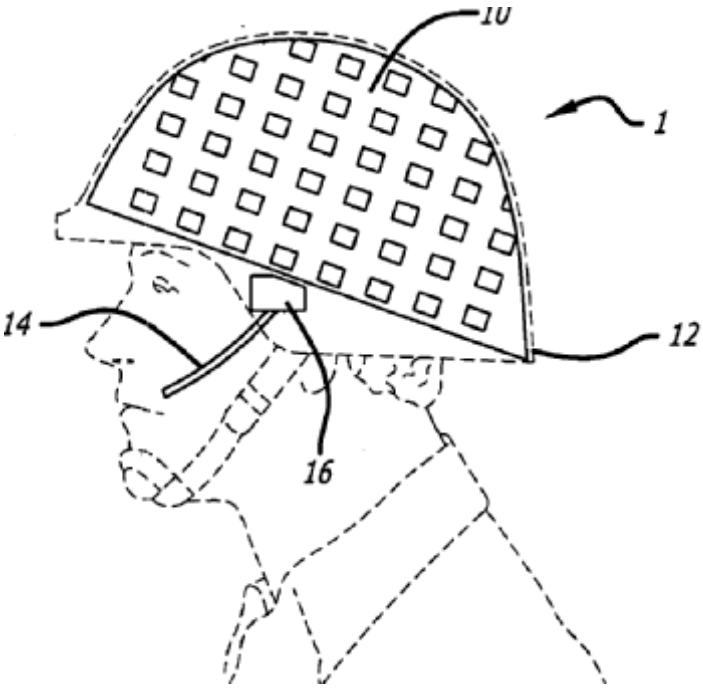

H01Q 1/28

Adaptation for use in or on aircraft, missiles, satellites, or balloons

Definition statement

This place covers:

Illustrative example of subject-matter classified in this group:

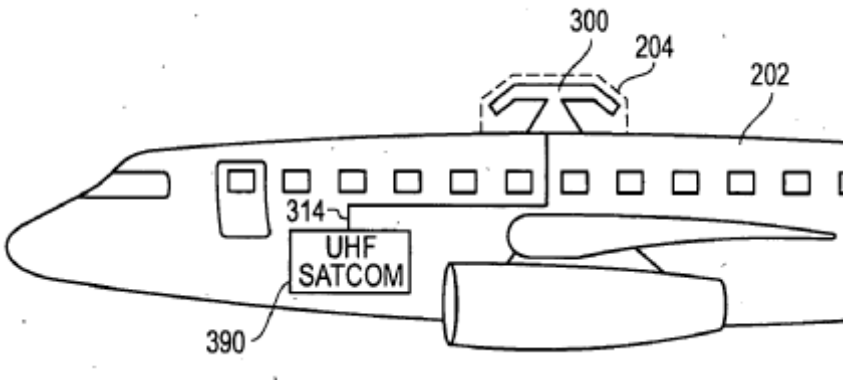

(trains, cars are excluded)

H01Q 1/281

{Nose antennas}

Definition statement

This place covers:

Antennas mounted in the nose of an airplane behind a radome.

Illustrative example of subject-matter classified in this group:

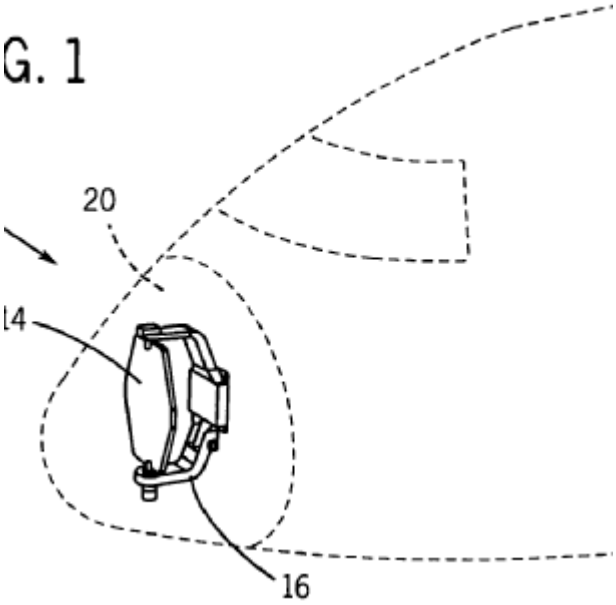

H01Q 1/282

{Modifying the aerodynamic properties of the vehicle, e.g. projecting type aerials}

Definition statement

This place covers:

Antenna inside a radom projecting from the fuselage/housing of the vehicle.

Illustrative example of subject-matter classified in this group:

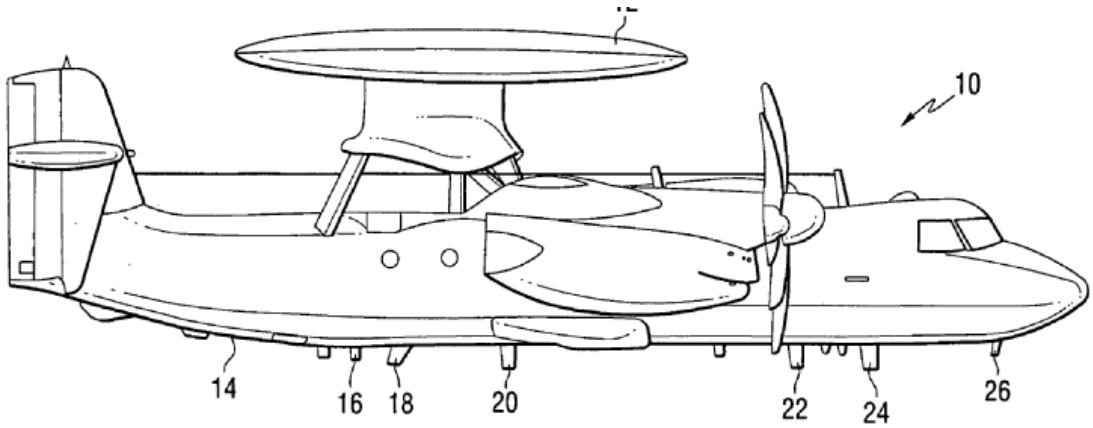

H01Q 1/283

{Blade, stub antennas}

Definition statement

This place covers:

Form of a monopole antenna that is blade-shaped for strength and low aerodynamic drag. E.g. shape of a blade or fin protruding from the surface of the aircraft affecting the aircraft aerodynamics; e.g. monopole made by flat sheet.

Illustrative example of subject-matter classified in this group:

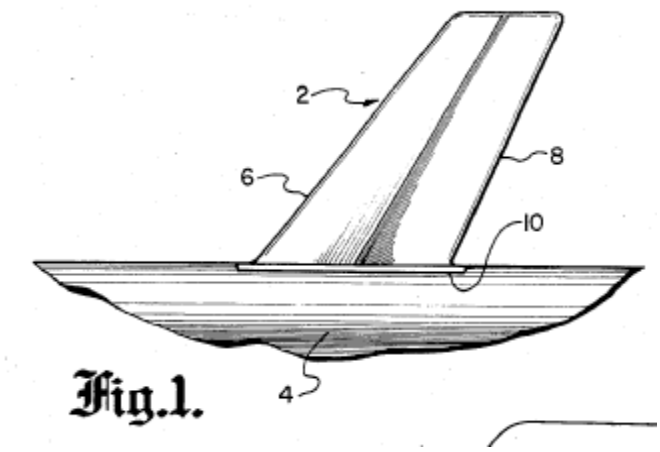

H01Q 1/285

{Aircraft wire antennas (means for trailing H01Q 1/30)}

Definition statement

This place covers:

Wire antennas mounted on the vehicle; fuselage / housing used as support. Trailing antennas are NOT classified here.

Illustrative example of subject-matter classified in this group:

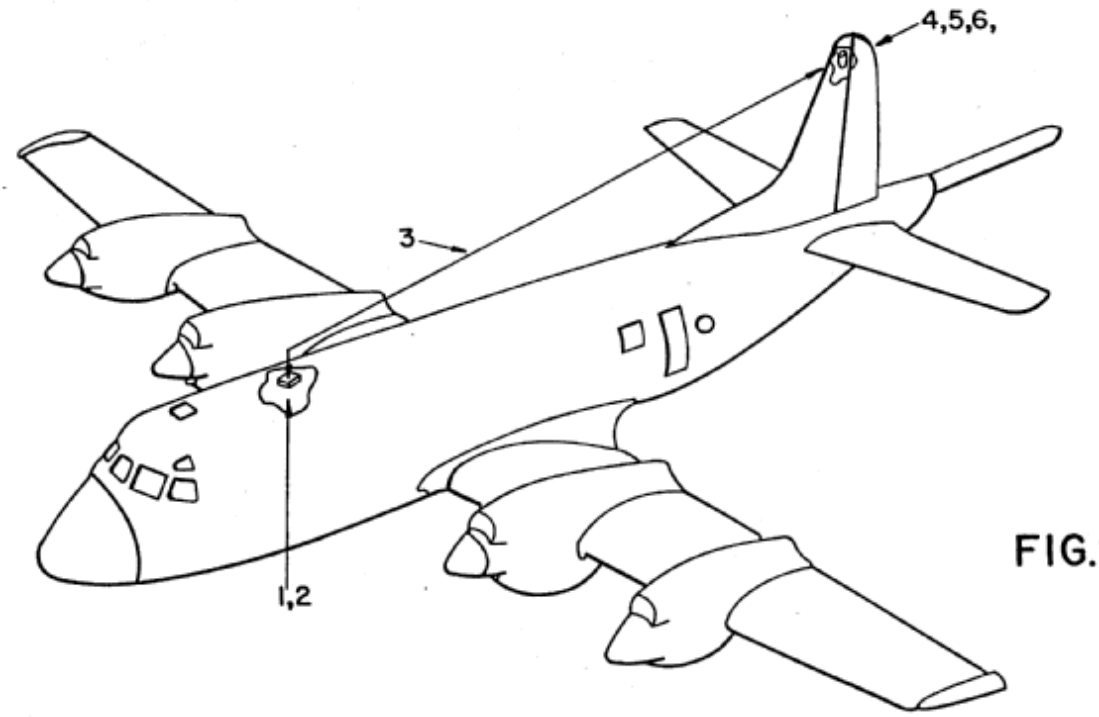

References

Limiting references

This place does not cover:

Means for trailing	H01Q 1/30

H01Q 1/286

{substantially flush mounted with the skin of the craft}

Definition statement

This place covers:

An antenna constructed into the surface of a mechanism, or of a vehicle, without affecting the shape of that surface. Contrast with a conformal antenna: An antenna (array) that conforms to a surface whose shape is determined by considerations other than electromagnetic; for example, aerodynamic or hydrodynamic.

Illustrative example of subject-matter classified in this group:

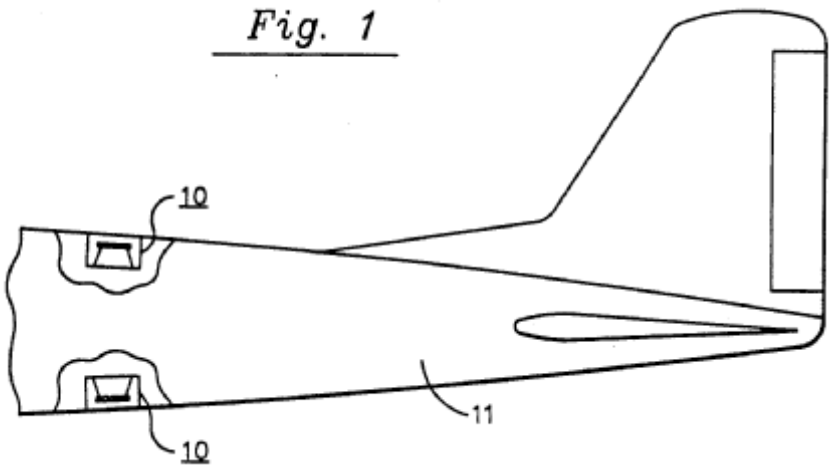

H01Q 1/287

{integrated in a wing or a stabiliser}

Definition statement

This place covers:

Only specifies the location where the antennas are flush mounted.

Illustrative example of subject-matter classified in this group:

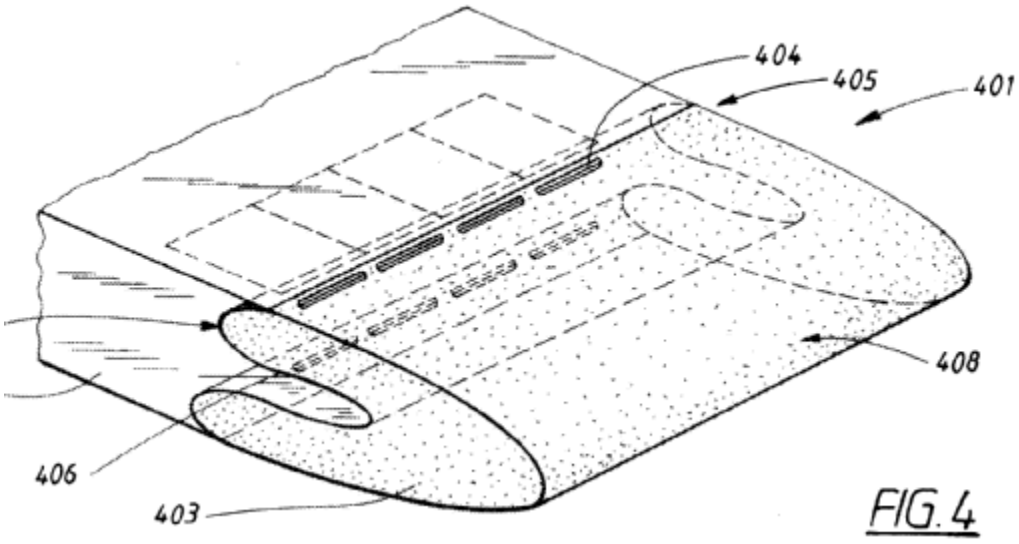

H01Q 1/288

{Satellite antennas}

Definition statement

This place covers:

Antennas mounted in or on a satellite or space based station in aerospace, e.g. communication satellite as geostationary or low or medium earth orbiting (LEO or MEO).

Illustrative example of subject-matter classified in this group:

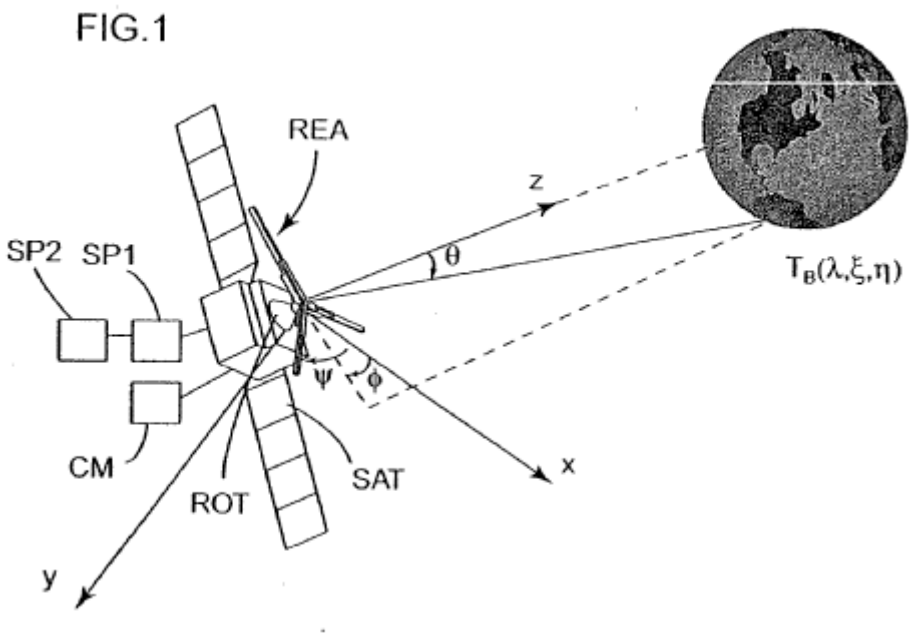

References

Informative references

Attention is drawn to the following places, which may be of interest for search:

Cosmonautics; vehicles or equipment therefor	B64G
Space-based or airborne stations	H04B 7/185 and subgroups

H01Q 1/30

Means for trailing aerials

Definition statement

This place covers:

Antenna being trailed by aircraft, missiles, ships, satellites or balloons.

Illustrative example of subject-matter classified in this group:

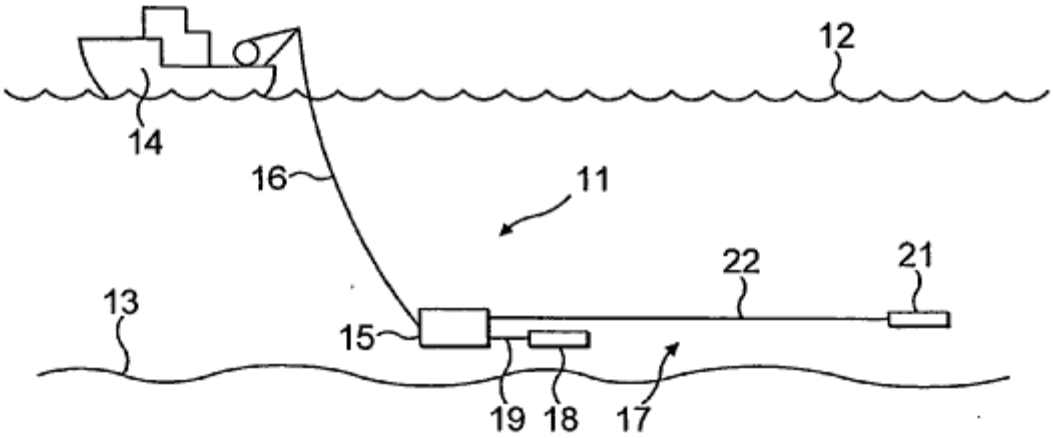

H01Q 1/32

Adaptation for use in or on road or rail vehicles (telescopic elements H01Q 1/10; resilient mountings for aerials H01Q 1/20)

Definition statement

This place covers:

Illustrative example of subject-matter classified in this group:

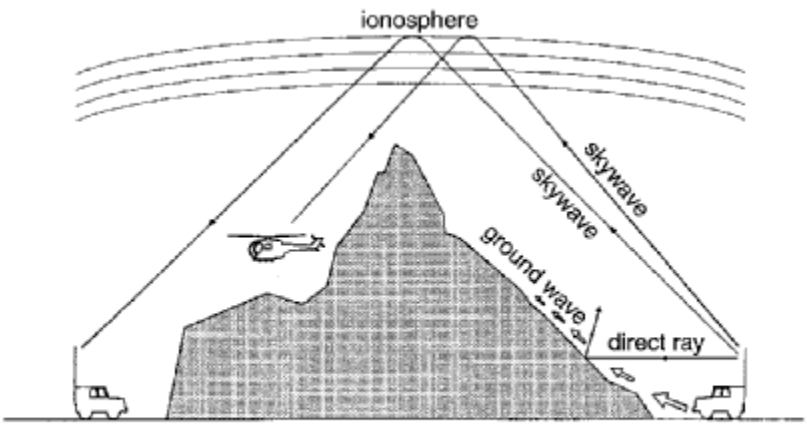

Fig. 1 *Diagrammatic view of the NVIS path* (not to scale)

NOT the windscreen aerials.

References

Limiting references

This place does not cover:

Telescopic elements	H01Q 1/10
Resilient mountings for aerials	H01Q 1/20

H01Q 1/3208

{characterised by the application wherein the antenna is used}

Definition statement

This place covers:

Directed at the use of the antennas.

Illustrative example of subject-matter classified in this group:

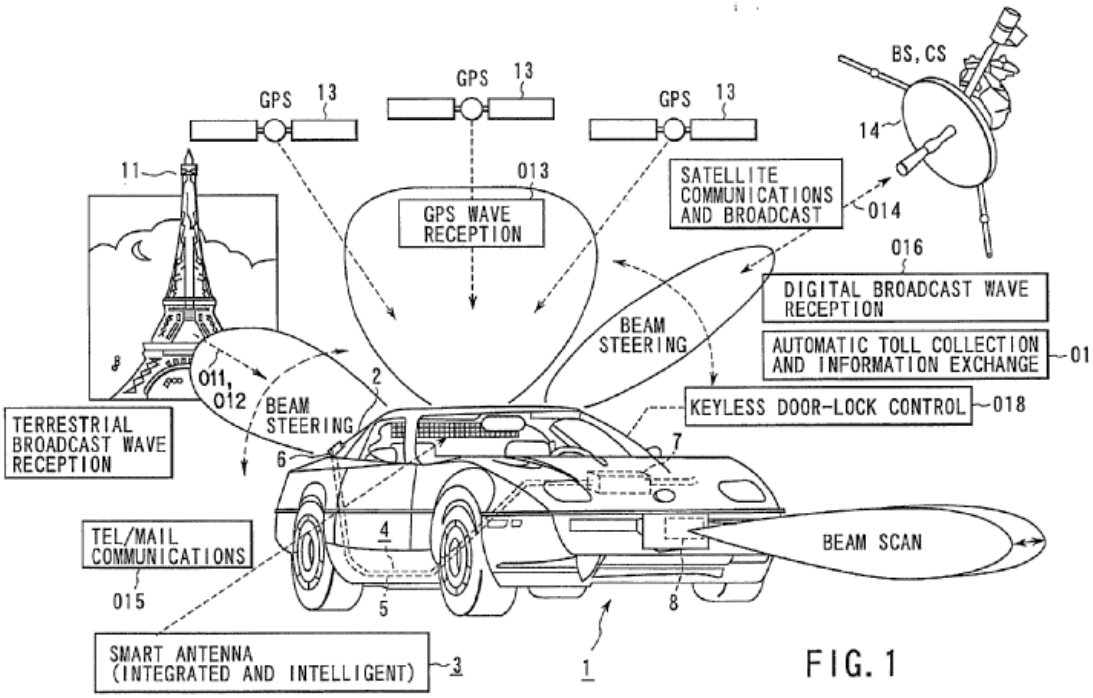

FIG. 1

Synonyms and Keywords

In patent documents, the following abbreviations are often used:

LCD	Liquid Crystal Display

H01Q 1/3216

{where the road or rail vehicle is only used as transportation means}

Definition statement

This place covers:

Illustrative example of subject-matter classified in this group:

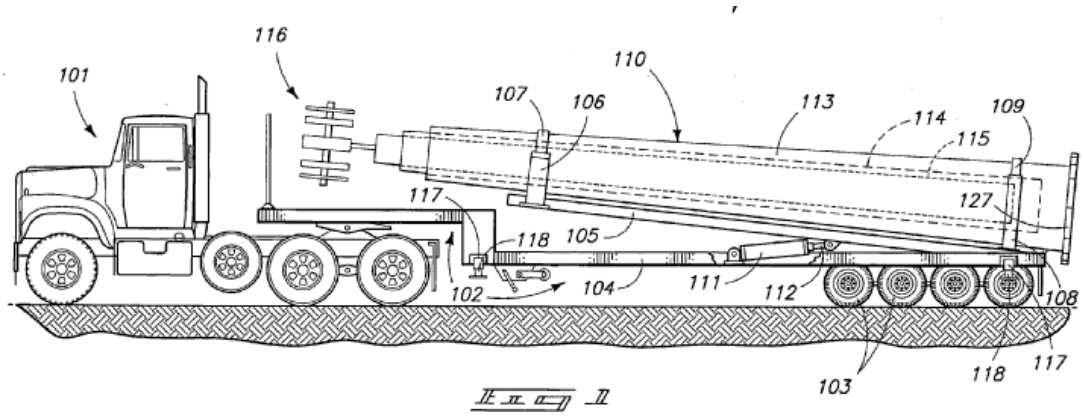

H01Q 1/3225

{Cooperation with the rails or the road}

Definition statement

This place covers:

Illustrative example of subject-matter classified in this group:

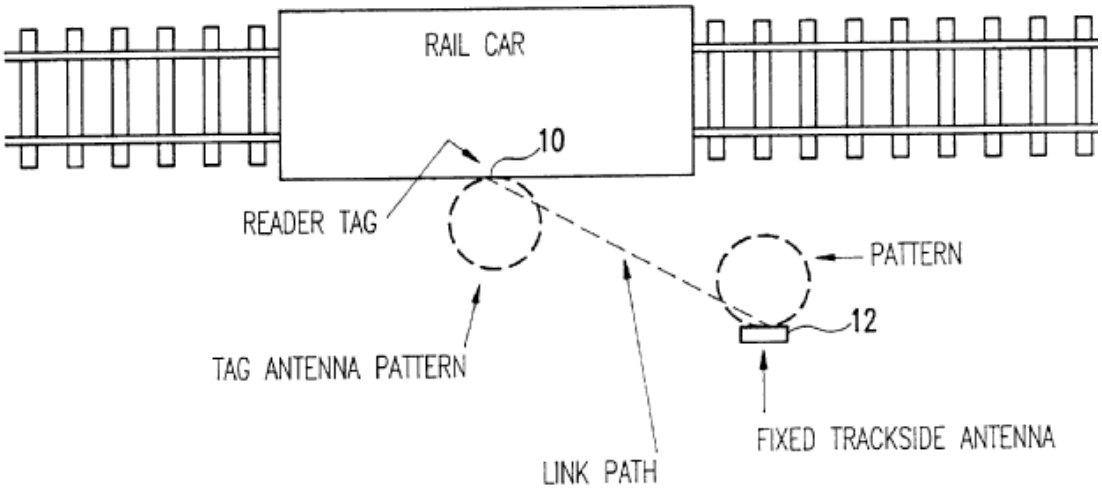

References

Informative references

Attention is drawn to the following places, which may be of interest for search:

Traffic control systems for road vehicles	G08G 1/00

H01Q 1/3233

{particular used as part of a sensor or in a security system, e.g. for automotive radar, navigation systems}

Definition statement

This place covers:

Safety and security aspects.

Illustrative example of subject-matter classified in this group:

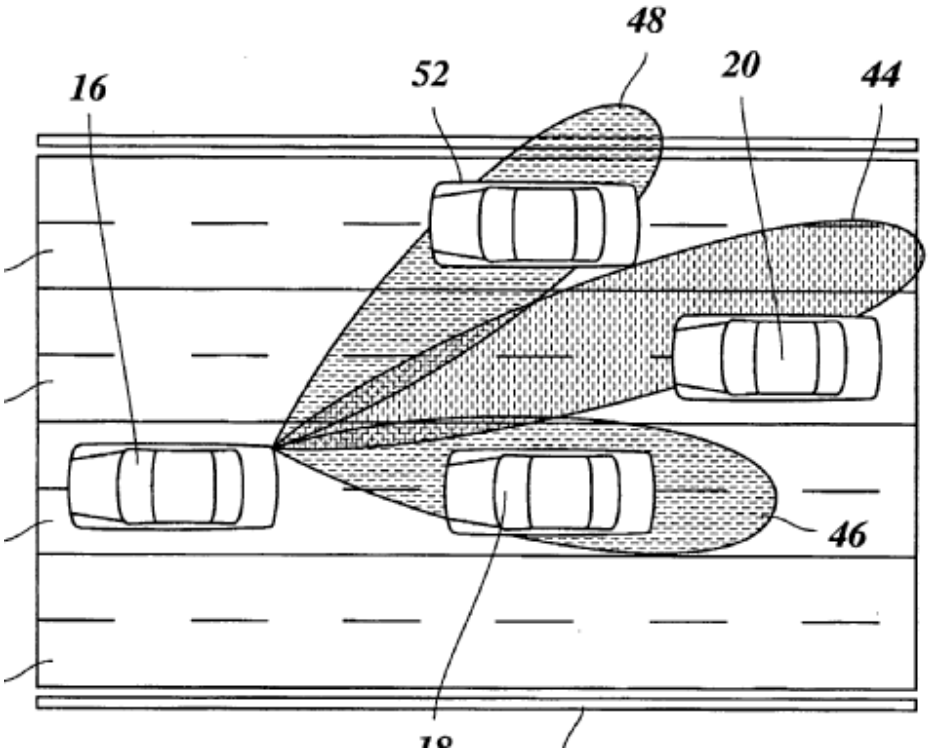

References

Informative references

Attention is drawn to the following places, which may be of interest for search:

Between land vehicles; between land vehicles and fixed obstacle	G01S 13/931

H01Q 1/3241

{particular used in keyless entry systems}

Definition statement

This place covers:

Illustrative example of subject-matter classified in this group:

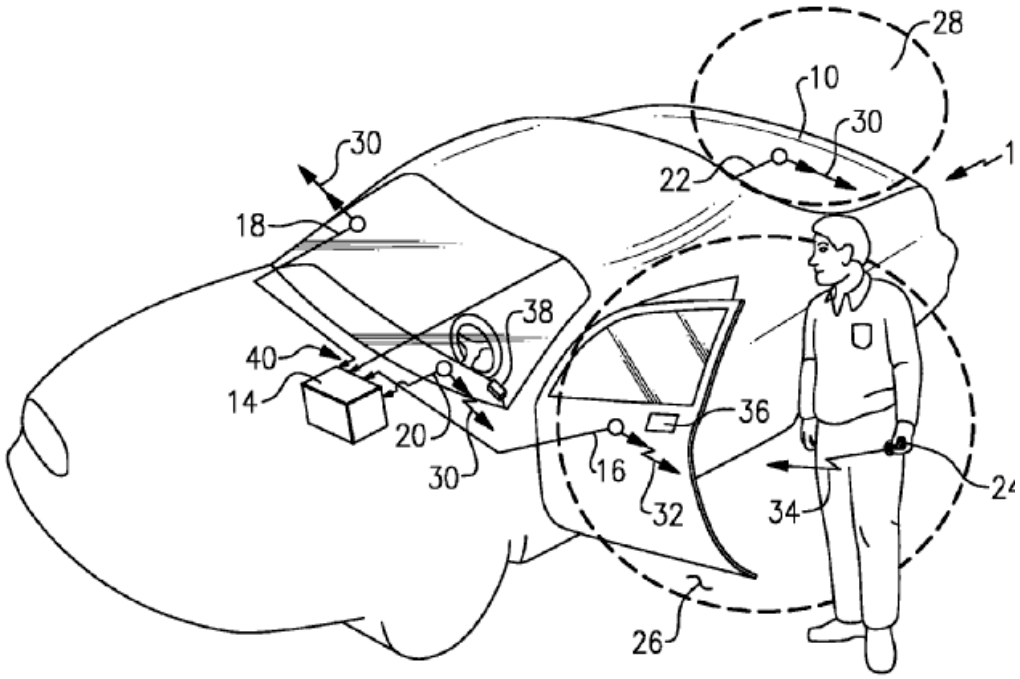

References

Informative references

Attention is drawn to the following places, which may be of interest for search:

The record carrier being capable of non-contact communication	G06K 19/07749

H01Q 1/325

{characterised by the location of the antenna on the vehicle}

Definition statement

This place covers:

Directed at the location of the antenna on the vehicle.

Illustrative example of subject-matter classified in this group:

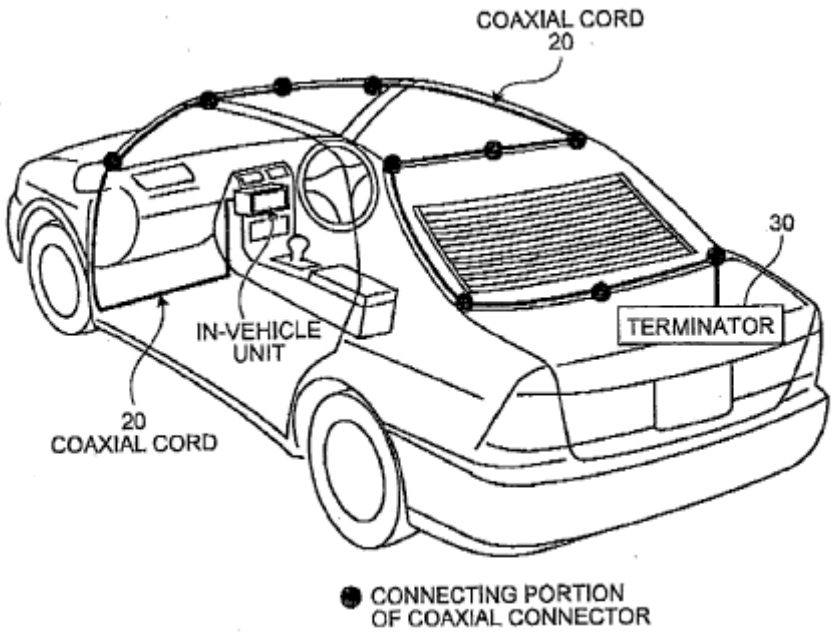

H01Q 1/3258

{using the gutter of the vehicle; Means for clamping a whip aerial on the edge of a part of the vehicle}

Definition statement

This place covers:

Illustrative example of subject-matter classified in this group:

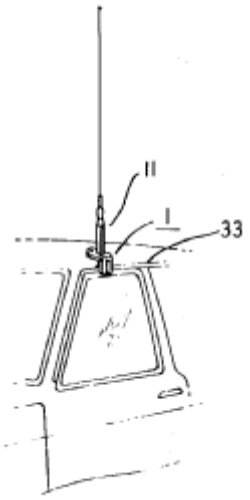

H01Q 1/3266

{using the mirror of the vehicle}

Definition statement

This place covers:

Internal AND external mirrors.

Illustrative example of subject-matter classified in this group:

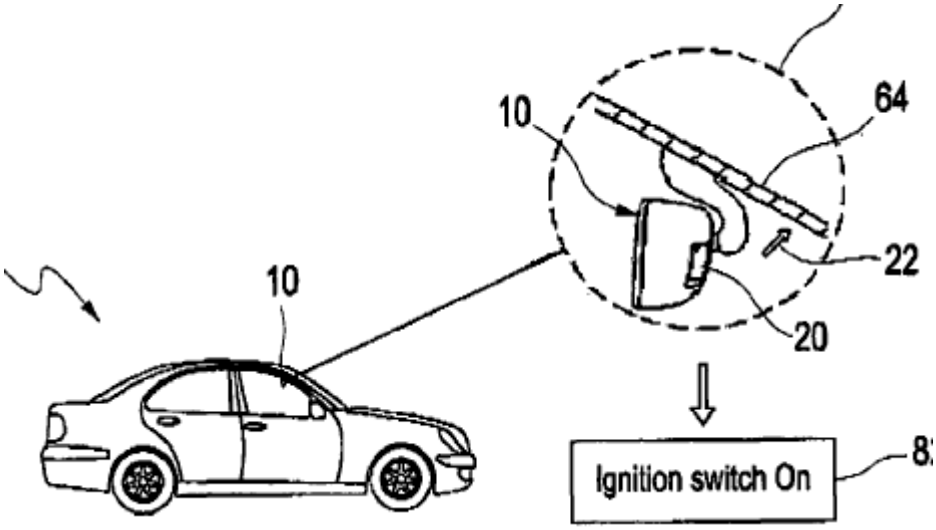

References

Informative references

Attention is drawn to the following places, which may be of interest for search:

Rear-view mirror arrangements	B60R 1/02

H01Q 1/3275

{mounted on a horizontal surface of the vehicle, e.g. on roof, hood, trunk}

Definition statement

This place covers:

Illustrative example of subject-matter classified in this group:

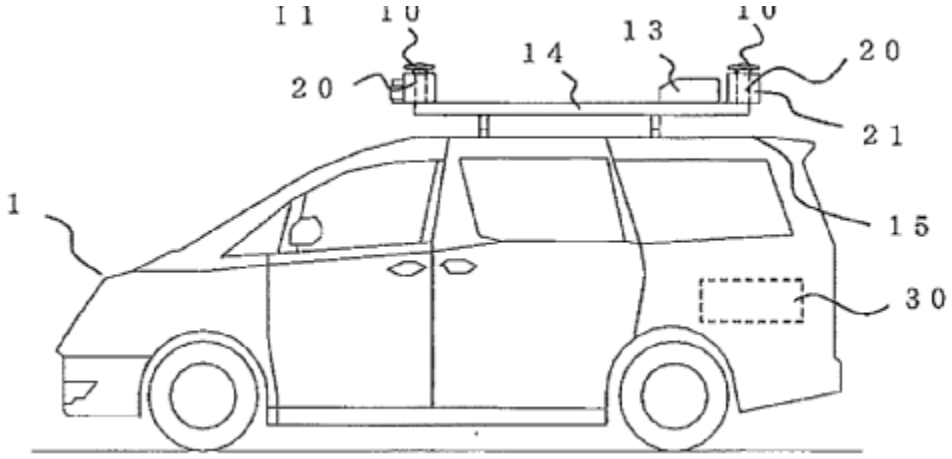

H01Q 1/3283

{side-mounted antennas, e.g. bumper-mounted, door-mounted (mounted on windscreens H01Q 1/1271)}

Definition statement

This place covers:

Illustrative example of subject-matter classified in this group:

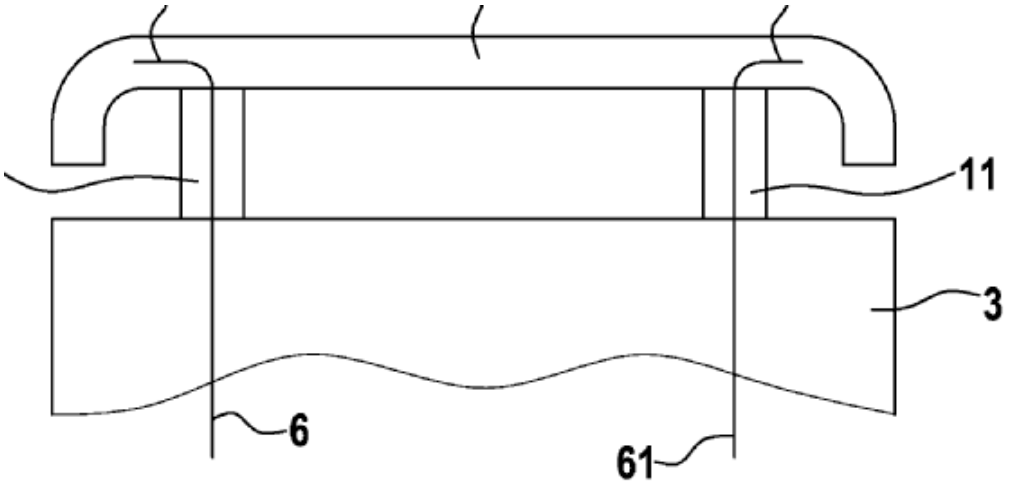

References

Limiting references

This place does not cover:

Mounted on windscreens	H01Q 1/1271

H01Q 1/3291

{mounted in or on other locations inside the vehicle or vehicle body}

Definition statement

This place covers:

For example:

Roof rack; inside cavities within the vehicle.

Illustrative example of subject-matter classified in this group:

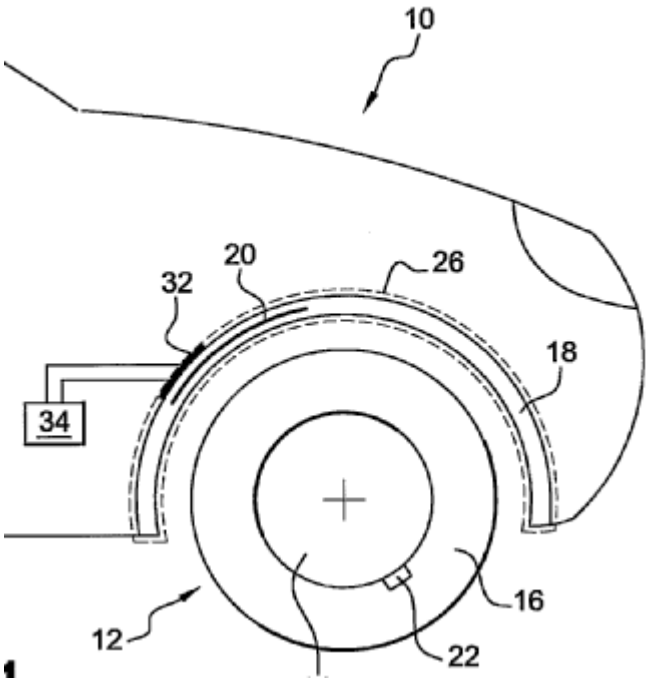

H01Q 1/34

Adaptation for use in or on ships, submarines, buoys, or torpedoes (for subaqueous use H01Q 1/04; retractable loop aerials H01Q 7/02)

Definition statement

This place covers:

Illustrative example of subject-matter classified in this group:

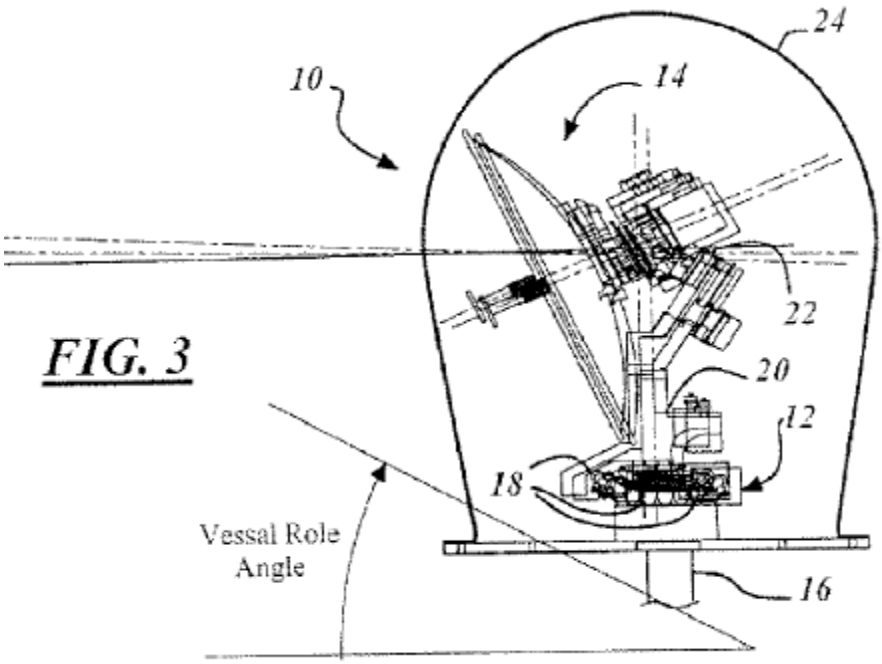

FIG. 3

References

Limiting references

This place does not cover:

For subaqueous use	H01Q 1/04
Retractable loop aerials	H01Q 7/02

H01Q 1/36

Structural form of radiating elements, e.g. cone, spiral, umbrella; {Particular materials used therewith} (H01Q 1/08, H01Q 1/14 take precedence)

Definition statement

This place covers:

Directed at specific shapes of the radiator.

Illustrative example of subject-matter classified in this group:

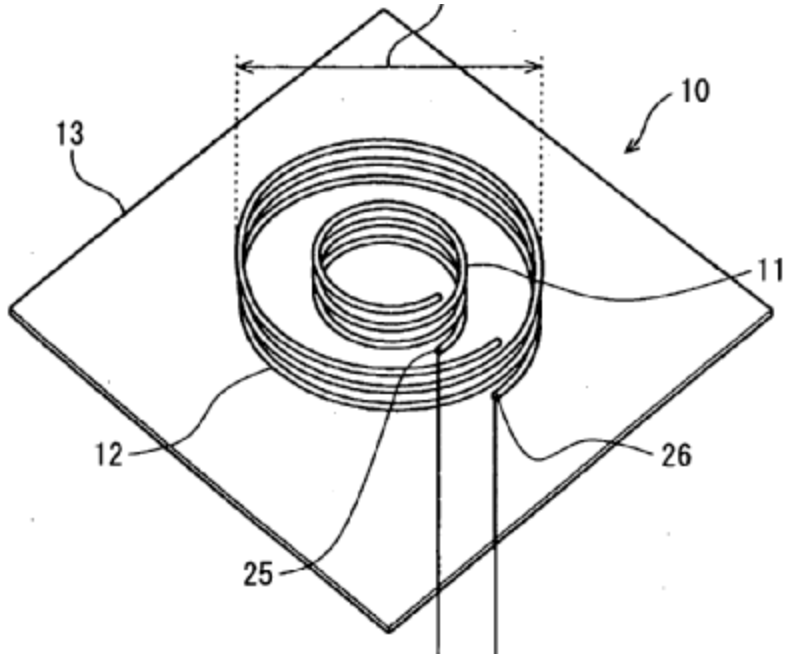

References

Limiting references

This place does not cover:

Means for collapsing aerials or parts thereof	H01Q 1/08
For wire or other non-rigid radiating elements	H01Q 1/14
Device acting selectively as reflecting surface, as diffracting or as refracting device e.g. frequency filtering or angular spatial filtering devices	H01Q 15/0006

H01Q 1/362

{for broadside radiating helical antennas}

Definition statement

This place covers:

Definitions: An antenna whose configuration is that of a helix (the diameter, pitch, and number of turns in relation to the wavelength provide control of the polarization state and directivity) Here: helical antennas in the normal mode that means radiation broadside to the helix with linear polarization if helix diameter is less than lambda but length is comparable to lambda; i.e. helical monopole (coiling the antenna along its length).

H01Q 11/08+: helical antennas in axial/radial mode and circular polarization as monofilar, bifilar or quadrifilar (circumference in order of lambda and axial length several times larger than lambda).

Illustrative example of subject-matter classified in this group:

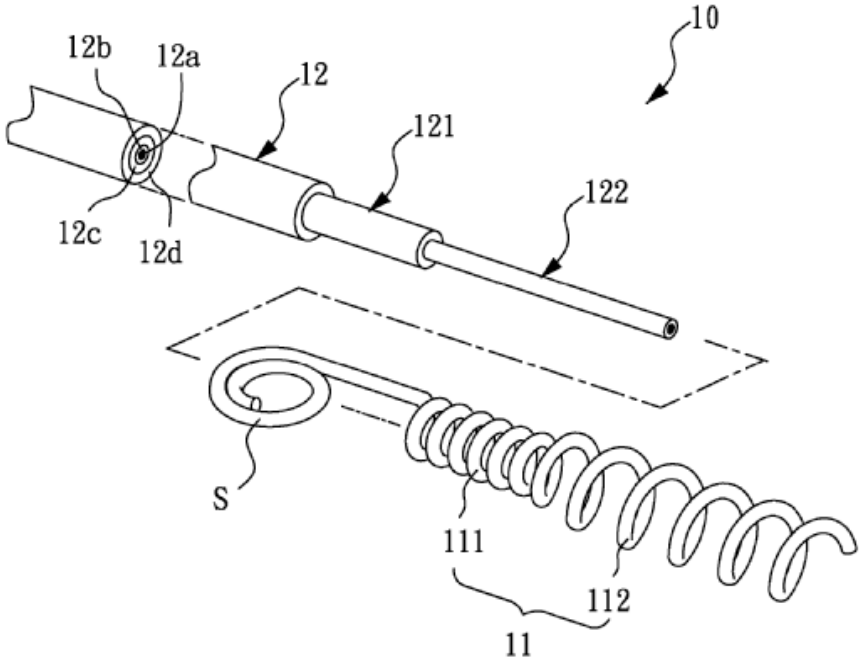

References

Informative references

Attention is drawn to the following places, which may be of interest for search:

Helical aerials	H01Q 11/08 and subgroups

H01Q 1/364

{using a particular conducting material, e.g. supraconductor}

Definition statement

This place covers:

Directed at specific/special materials.

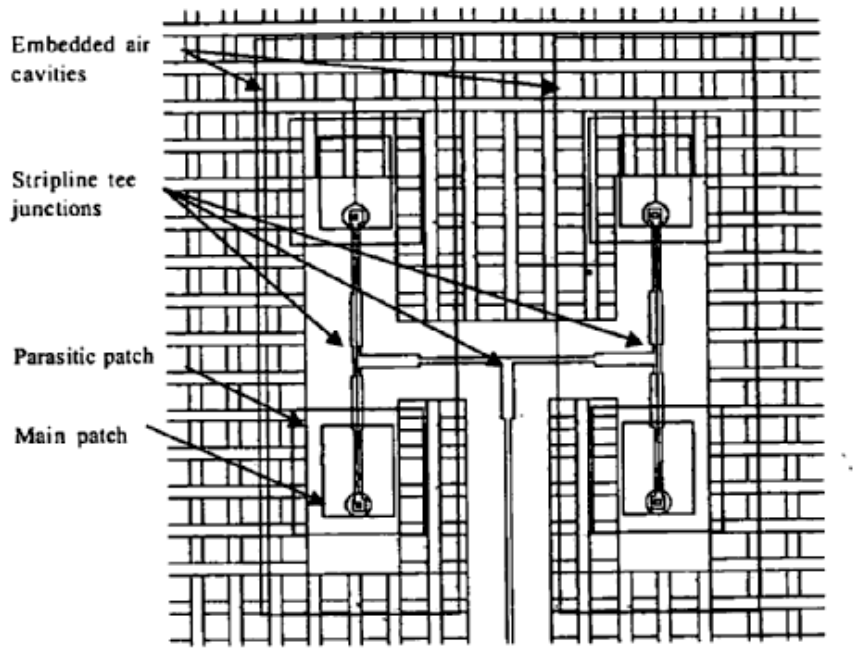

Fig. 5. Top view of a 2 × 2 LTCC stacked patch antenna array showing embedded air cavities (grounding vias removed for clarity).

H01Q 1/366

{using an ionized gas}

Definition statement

This place covers:

Illustrative example of subject-matter classified in this group:

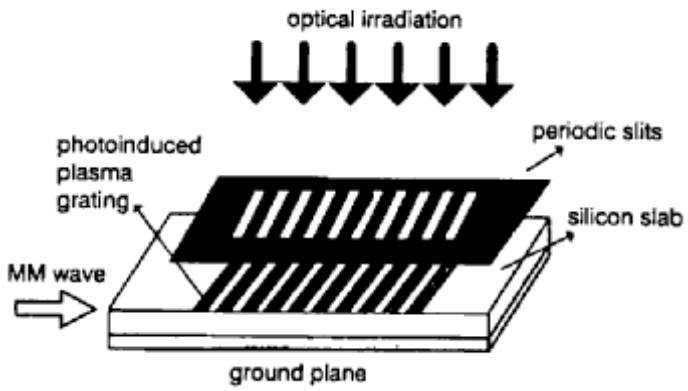

References

Informative references

Attention is drawn to the following places, which may be of interest for search:

Using applied electromagnetic fields, e.g. high frequency or microwave energy	H05H 1/46

H01Q 1/368

{using carbon or carbon composite}

Definition statement

This place covers:

Illustrative example of subject-matter classified in this group:

Fig. 2
The basic principle of the Cassegrain antenna with polarization-twisting main reflector and polarization-sensitive subreflector

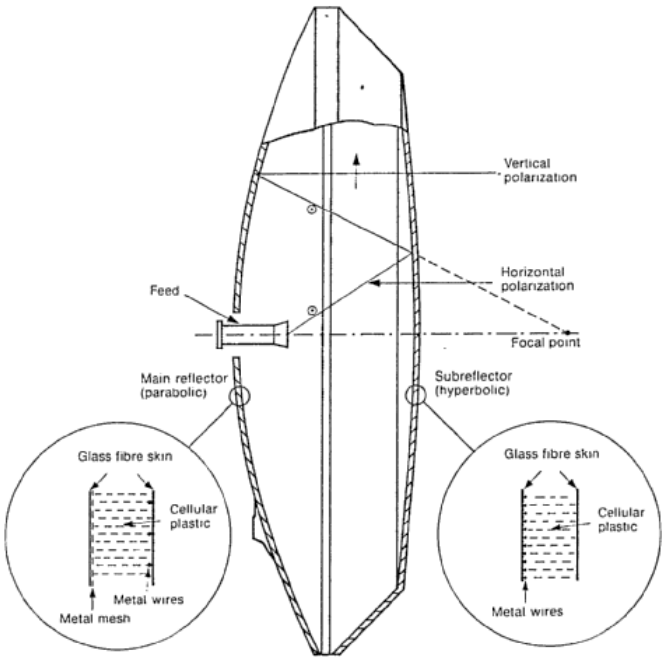

H01Q 1/38

formed by a conductive layer on an insulating support ({patch antennas H01Q 9/0407; microstrip dipole antennas H01Q 9/065; microstrip slot antenn as H01Q 13/106; transmission line microstrip antennas H01Q 13/206; manufacturing reflecting surfaces using insulating material for supporting the reflecting surface H01Q 15/142} ; conductors in general H01B 5/14)

Definition statement

This place covers:

Sub-group of H01Q 1/36 whereby special structural forms of radiating elements are mounted on an insulating support.

Printed circuit antenna, an antenna of some desired shape bonded onto a dielectric substrate with various insulating materials, like dielectrics; ceramics, ferrites, ferroelectric composites.

Illustrative example of subject-matter classified in this group:

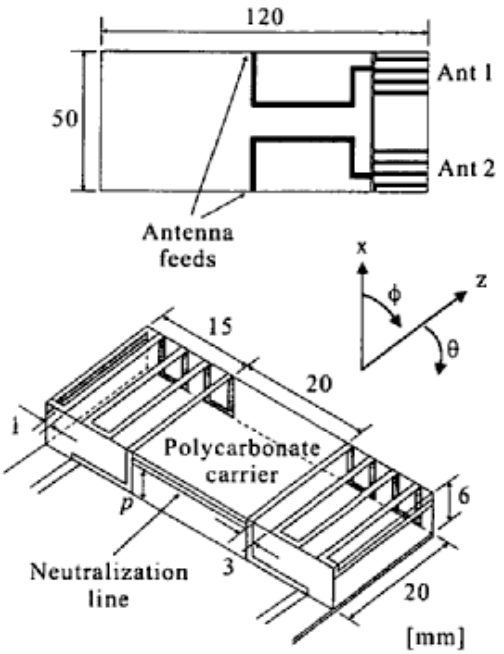

Fig. 1 Miniaturized LTE-band dual monopole antenna examined in this paper.

References

Limiting references

This place does not cover:

Patch antennas	H01Q 9/0407
Microstrip dipole antennas	H01Q 9/065
Microstrip slot antennas	H01Q 13/106
Transmission line microstrip antennas	H01Q 13/206
Manufacturing reflecting surfaces using insulating material for supporting the reflecting surface	H01Q 15/142
Conductors in general	H01B 5/14

Glossary of terms

In this place, the following terms or expressions are used with the meaning indicated:

Chiral composites	embedding miniature helices in a non-chiral host medium; the names comes from the Greek “kheir” which means “hand”

H01Q 1/40

Radiating elements coated with or embedded in protective material

Definition statement

This place covers:

Protective cover like as radome and better matching to epsilon air.

Illustrative example of subject-matter classified in this group:

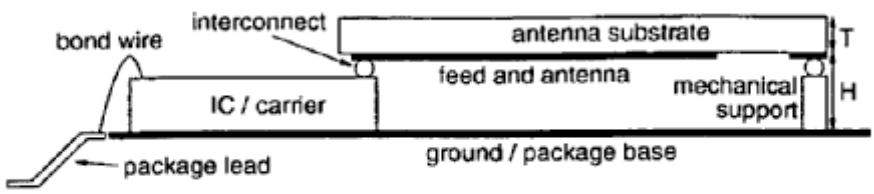

Fig. 1. Concept of antenna together with IC or carrier (side view, not to scale).

H01Q 1/405

{Radome integrated radiating elements}

Definition statement

This place covers:

Elements are INSIDE radome.

Illustrative example of subject-matter classified in this group:

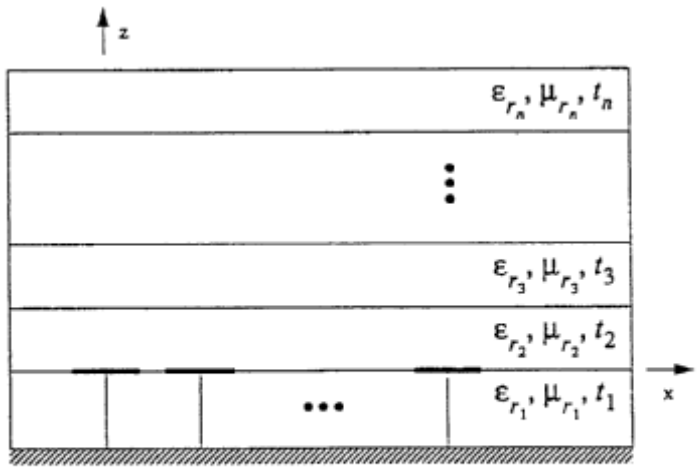

(b) Side View

Fig. 1 Array of probe-fed rectangular microstrip patches embedded in a multilayer dielectric material. The probes are connected to the ground plane through an arbitrary impedance Z_L.

H01Q 1/42

Housings not intimately mechanically associated with radiating elements, e.g. radome

Definition statement

This place covers:

A cover, usually intended for protecting an antenna from the effects of its physical environment without degrading its electrical performance.

Illustrative example of subject-matter classified in this group:

Fig. 1. M.I.T. Haystack Observatory's 120-ft parabolic antenna enclosed in 150 ft MSF radome.

Glossary of terms

In this place, the following terms or expressions are used with the meaning indicated:

Radome	Radar dome
Irdome	!nftared dome

H01Q 1/421

{Means for correcting aberrations introduced by a radome}

Definition statement

This place covers:

Normally choice of material, thicknesses of layers, etc.

Illustrative example of subject-matter classified in this group:

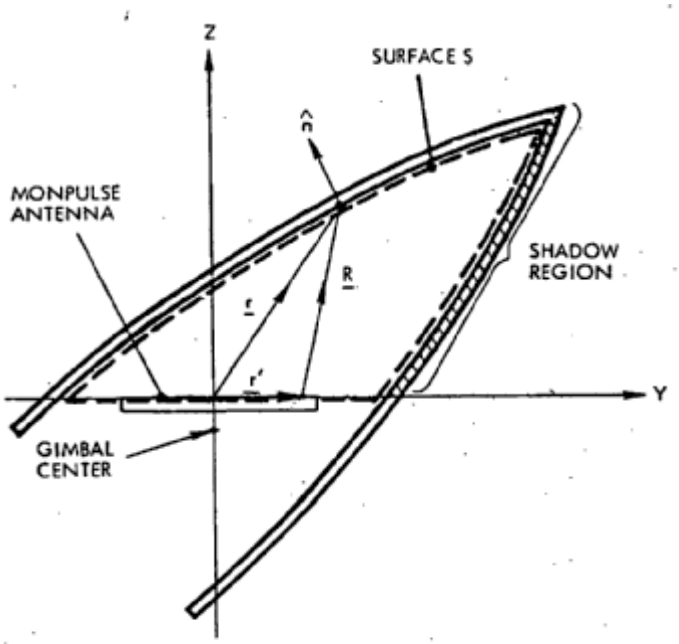

Fig. 2. Surface of integration S defined by inner radome contour and plane including antenna face.

H01Q 1/422

{comprising two or more layers of dielectric material (H01Q 1/425 takes precedence)}

Definition statement

This place covers:

Normally multilayer or sandwich construction.

Illustrative example of subject-matter classified in this group:

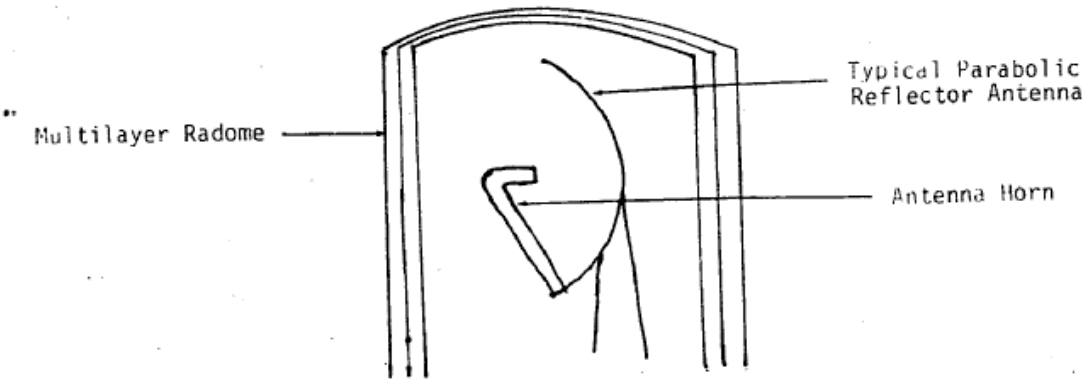

References

Limiting references

This place does not cover:

Details of, or arrangements associated with, aerials, housings not intimately mechanically associated with radiating elements, e.g. radome, comprising a metallic grid	H01Q 1/425

H01Q 1/424

{comprising a layer of expanded material}

Definition statement

This place covers:

Normally used using a moulding/molding process and expansion, e.g. polystyrene shells used for protection against weather influences.

Illustrative example of subject-matter classified in this group:

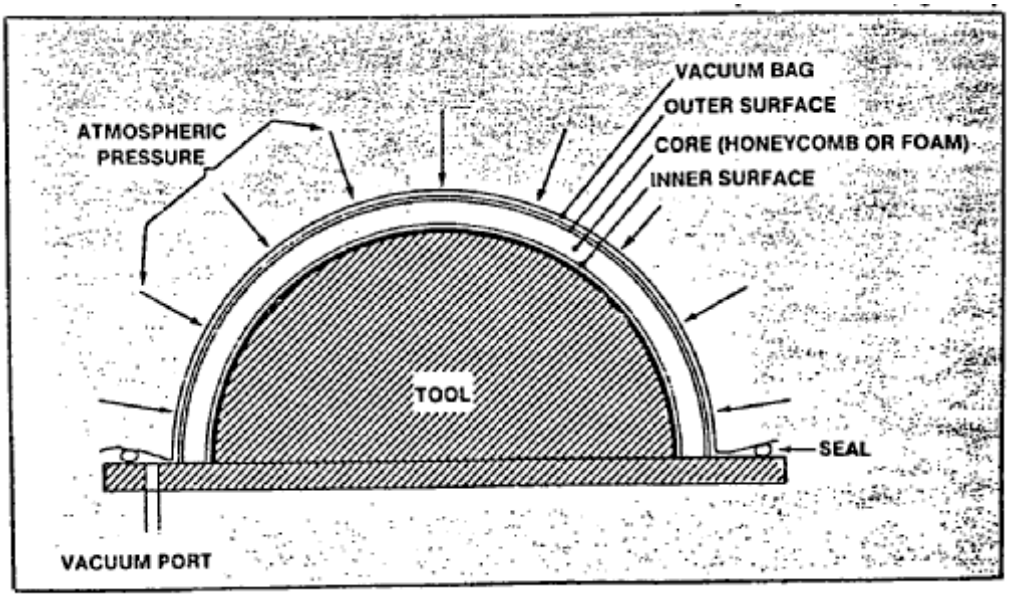

H01Q 1/425

{comprising a metallic grid}

Definition statement

This place covers:

Metallic grid e.g. for heating; as polarizer or frequency selective surface (FSS).

Illustrative example of subject-matter classified in this group:

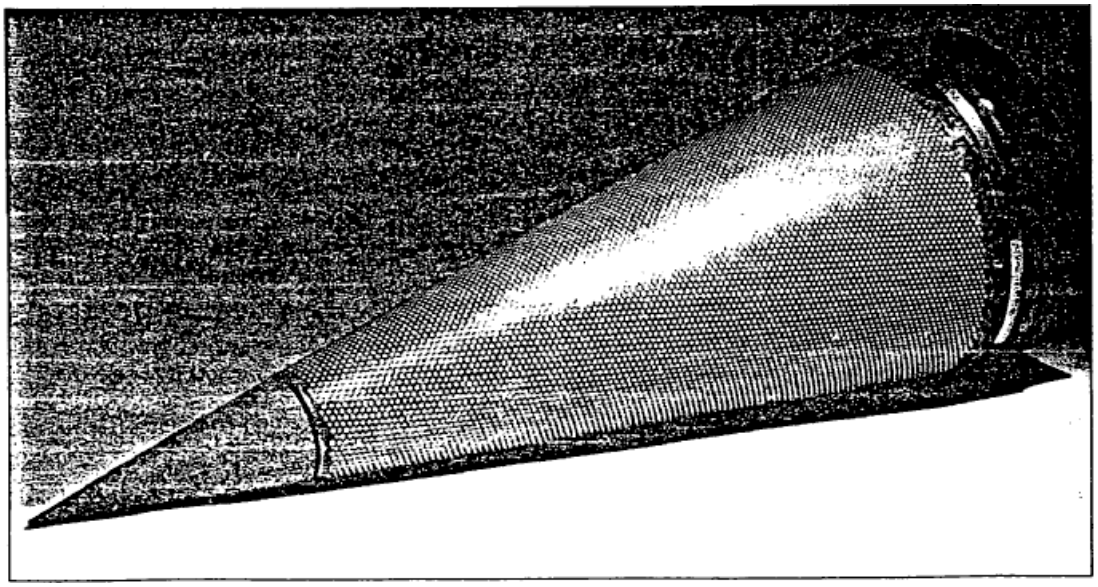

References

Informative references

Attention is drawn to the following places, which may be of interest for search:

Devices acting selectively as reflecting surface, as diffracting or as refracting device, e.g. frequency filtering or angular spatial filtering devices	H01Q 15/0006

H01Q 1/427

{Flexible radomes}

Definition statement

This place covers:

Normally used are fabrics.

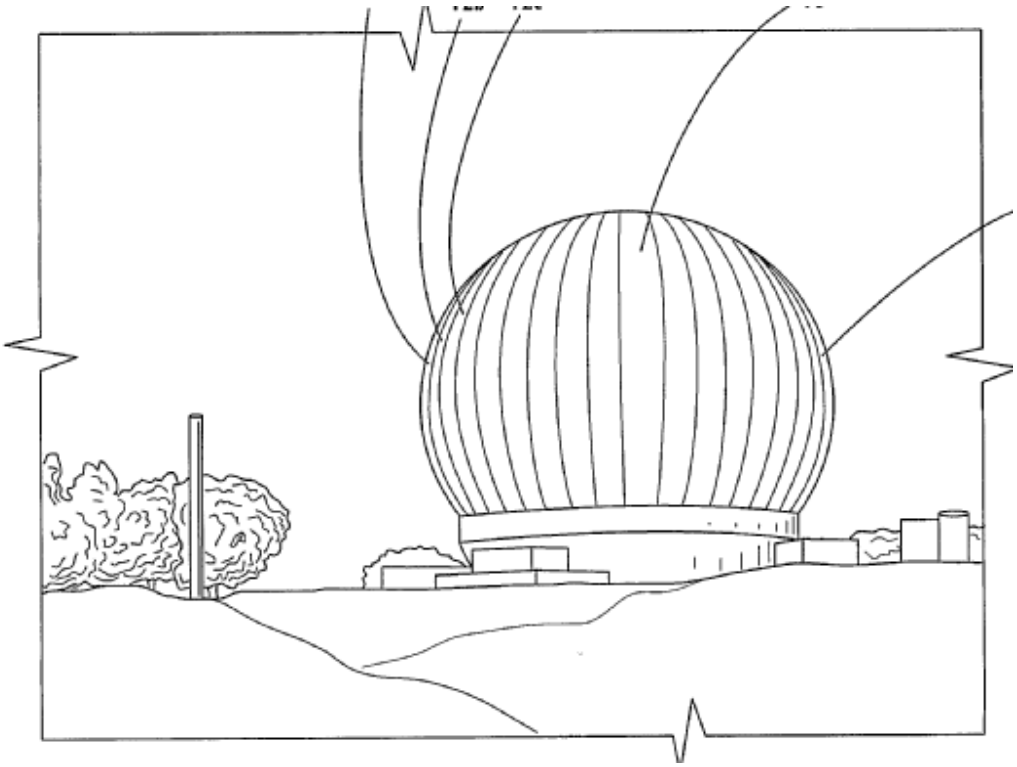

H01Q 1/428

{Collapsible radomes; rotatable, tiltable radomes}

Definition statement

This place covers:

Illustrative example of subject-matter classified in this group:

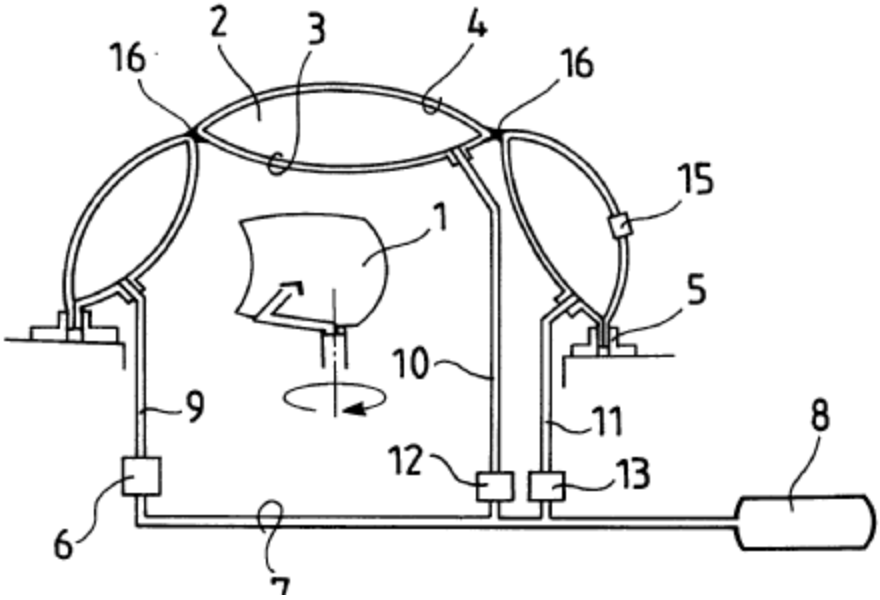

H01Q 1/44

using equipment having another main function to serve additionally as an aerial; {Means for giving an aerial anaesthetic aspect} (H01Q 1/28 - H01Q 1/34 take precedence)

Definition statement

This place covers:

Artificial trees; disguising antenna in other objects; camouflage; nicer, (a)esthetic appearance for reflectors; patterning / coloring of antennas; devices with integrated perfume dispensers.

Illustrative example of subject-matter classified in this group:

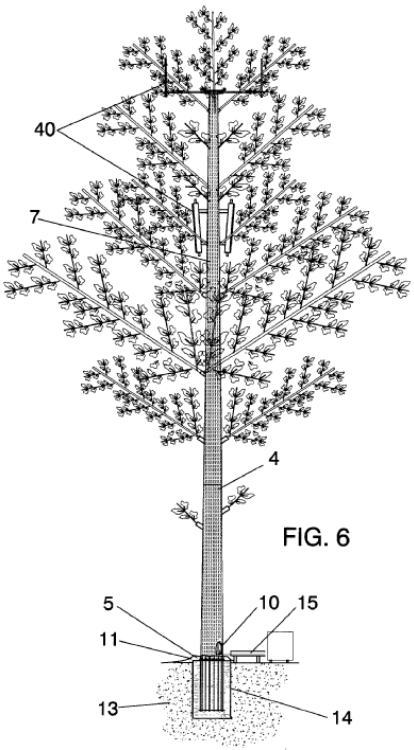

References

Limiting references

This place does not cover:

Adaptation for use in or on aircraft, missiles, satellites or balloons	H01Q 1/28
Adaptation for use in or on ships, submarines, buoys, or torpedoes	H01Q 1/34

H01Q 1/46

Electric supply lines or communication lines {(circuits for signal transmission via power distribution lines H04B 3/56)}

Definition statement

This place covers:

For example:

Power distribution lines used for a lf radar application.

Illustrative example of subject-matter classified in this group:

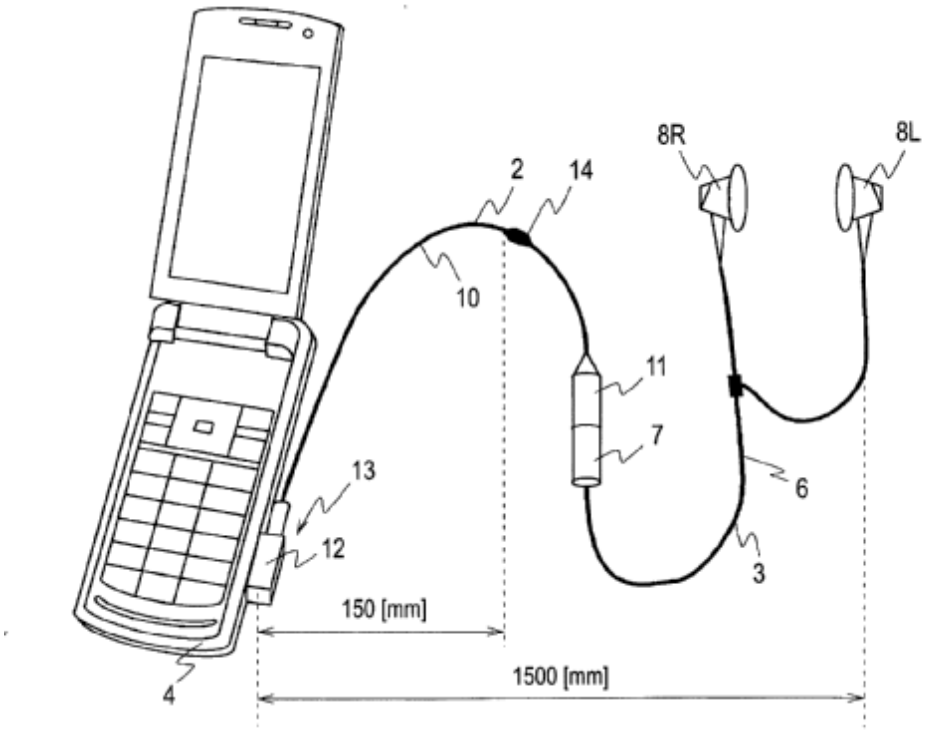

References

Informative references

Attention is drawn to the following places, which may be of interest for search:

Circuits for signal transmission via power distribution lines	H04B 3/56

H01Q 1/48

Earthing means; Earth screens; Counterpoises (earthing pins H01R 4/66)

Definition statement

This place covers:

Counterpoise: A system of conductors, elevated above and insulated from the ground, forming a lower system of conductors of an antenna.

Illustrative example of subject-matter classified in this group:

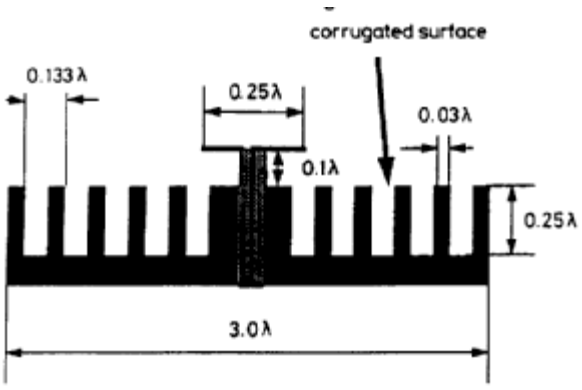

Fig. 1 *Horizontal dipole on corrugated soft ground plane*
Geometry with dimension in wavelengths at 5.0GHz

References

Informative references

Attention is drawn to the following places, which may be of interest for search:

Earthing pins	H01R 4/66

H01Q 1/50

Structural association of aerials with earthing switches, lead-in devices or lightning protectors (lead-in devices H01B; lightning protectors, switches H01H)

Definition statement

This place covers:

Only when integrated with antenna. The devices as such are in H01T.

Illustrative example of subject-matter classified in this group:

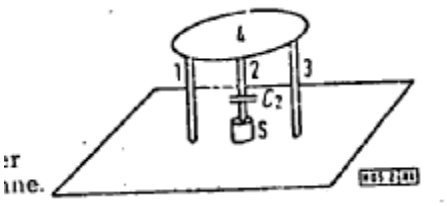

References

Informative references

Attention is drawn to the following places, which may be of interest for search:

Lead-in devices	H01B
Lightning protectors, switches	H01H
Structurally associated with protected apparatus	H01T 4/08

H01Q 1/52

Means for reducing coupling between aerials; Means for reducing coupling between an aerial and another structure {(absorbing means H01Q 17/00)}

Definition statement

This place covers:

Reducing the irradiation of objects.

Illustrative example of subject-matter classified in this group:

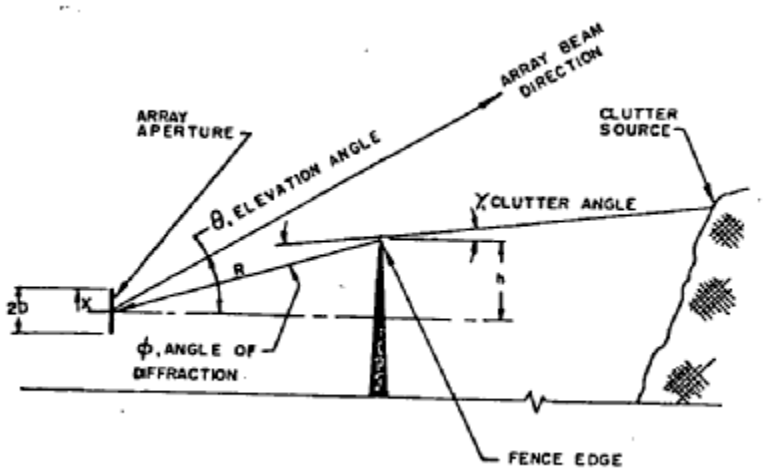

Fig. 1. Radar site dimensions and angles.

References

Limiting references

This place does not cover:

Absorbing means	H01Q 17/00

Synonyms and Keywords

Increasing isolation between antennas.

H01Q 1/521

{reducing the coupling between adjacent antennas}

Definition statement

This place covers:

Antennas are next to each other, but have no relation to another: antennas on the same GSM mast, but dedicated to the same service.

Illustrative example of subject-matter classified in this group:

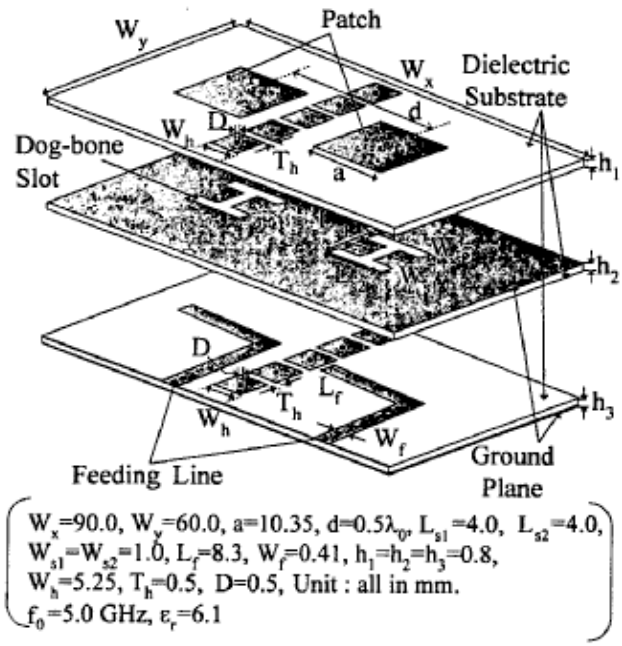

Fig. 1 Configuration of a 2-element MSA array fed by a triplate waveguide with EBG elements.

H01Q 1/523

{between antennas of an array}

Definition statement

This place covers:

Antennas next to each other, and belong to the same array, i.e. Sharing a feeding system.

Illustrative example of subject-matter classified in this group:

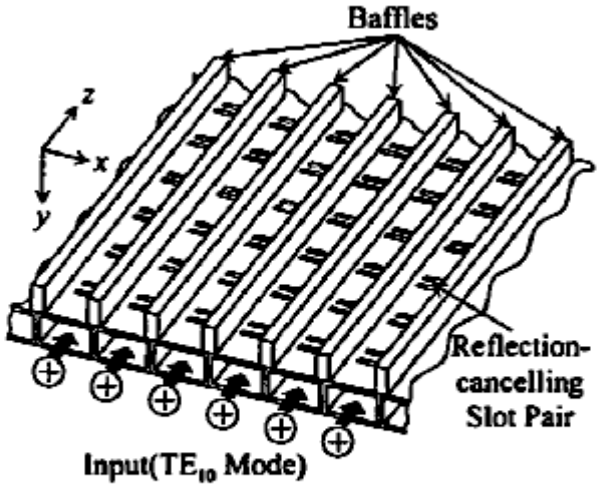

Fig. 1 Reflection-cancelling transverse slot-pair array antenna with grating-lobe suppressing baffles.

H01Q 1/525

{between emitting and receiving antennas (feed-through nulling for radar G01S 7/038)}

Definition statement

This place covers:

Solutions for overload / saturation at RX antenna: one antenna transmits, and at the same time, the other neighbouring antenna receives.

Illustrative example of subject-matter classified in this group:

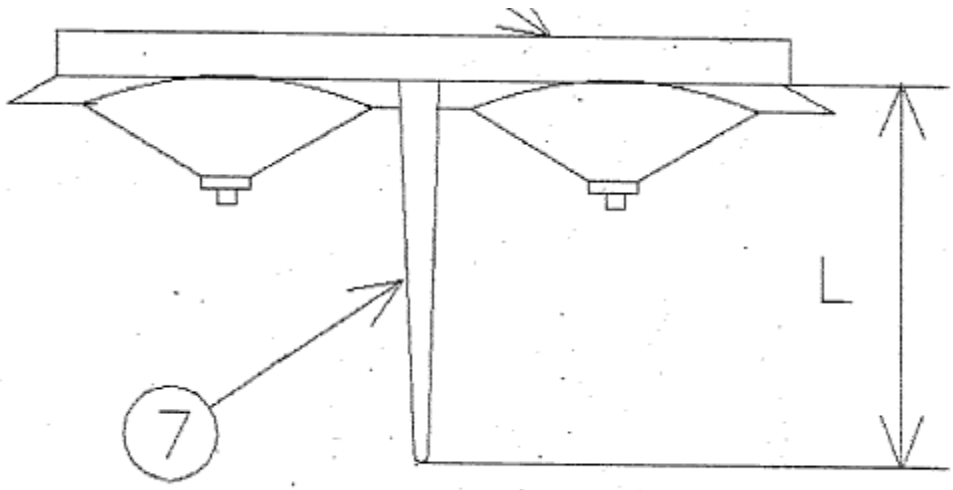

Fig. 2

References

Informative references

Attention is drawn to the following places, which may be of interest for search:

Feed-through nulling for radar	G01S 7/038

H01Q 1/526

{Electromagnetic shields (anechoic chambers G01R 29/105; shielding of instruments G12B 17/00, of CRT H01J 29/867, of electrical apparatus or components H05K 9/00)}

Definition statement

This place covers:

For example:

Grounded wall between a radiator and something else; fences.

Illustrative example of subject-matter classified in this group:

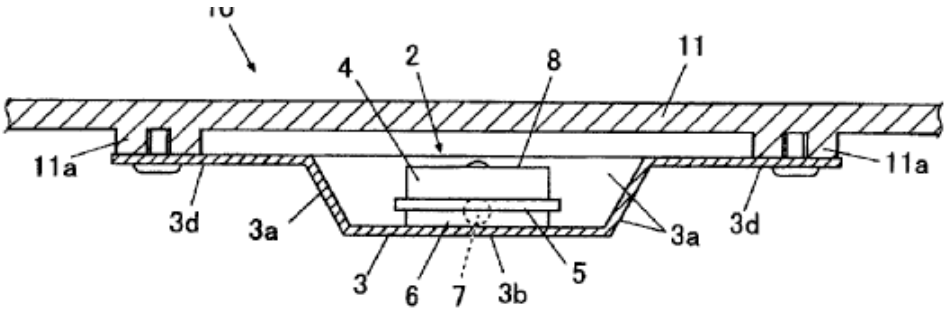

References

Informative references

Attention is drawn to the following places, which may be of interest for search:

Anechoic chambers	G01R 29/105
Shielding of instruments	G12B 17/00
Shielding of CRT	H01J 29/867
Shielding of electrical apparatus or components	H05K 9/00

H01Q 1/528

{reducing the reradiation of a support structure (in a parabolic reflector antenna H01Q 19/023)}

Definition statement

This place covers:

Reduing the influence of currents induced by the antenna onto, e.g. A support; increasing the decoupling of a ground-plane supported antenna, where the ground plane is not a counterpoise. ideally influence should be nothing, e.g. antenna on space craft.

Illustrative example of subject-matter classified in this group:

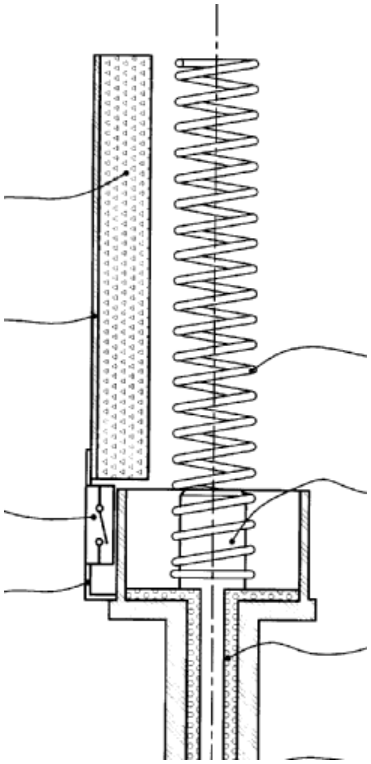

References

Limiting references

This place does not cover:

In a parabolic reflector antenna	H01Q 19/023

H01Q 3/00

Arrangements for changing or varying the orientation or the shape of the directional pattern of the waves radiated from an aerial or aerial system {(means for positioning H01Q 1/125)}

Definition statement

This place covers:

Changing or varying the orientation that is beam steering as changing the direction of the major lobe.

Related is beam scanning that is a repetitive motion given to the major lobe.

Changing or varying the shape that is beam forming.

Motion of the major lobe to have moving target within the lobe that is beam tracking.

Realized either:

- by mechanically moving the antenna or the feed or
- by electronically altering the aperture excitation with amplitude and phase.

References

Limiting references

This place does not cover:

Means for positioning	H01Q 1/125

H01Q 3/005

{using remotely controlled aerial positioning or scanning (remote control in general G08C)}

Definition statement

This place covers:

Remote control aspects as such.

Illustrative example of subject-matter classified in this group:

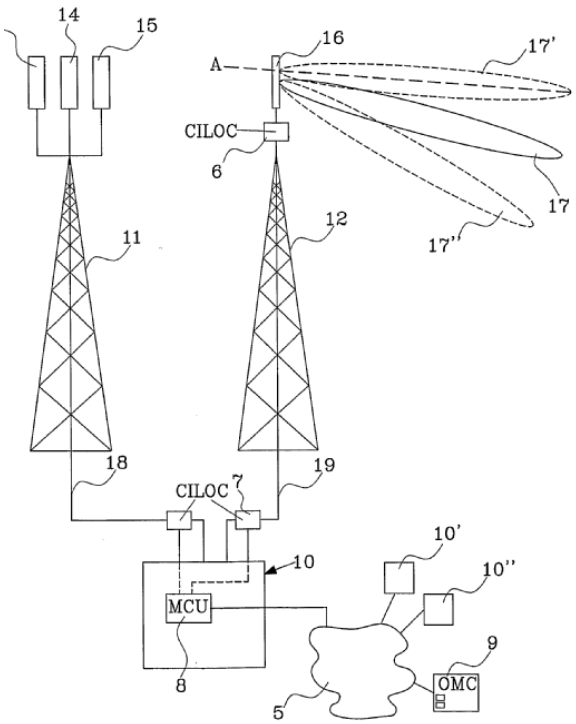

References

Informative references

Attention is drawn to the following places, which may be of interest for search:

Remote control in general	G08C

H01Q 3/01

varying the shape of the aerial or aerial system

Definition statement

This place covers:

The variations are mechanical variations, e.g. Deformable sub-reflectors in dual reflector antenna systems.

Illustrative example of subject-matter classified in this group:

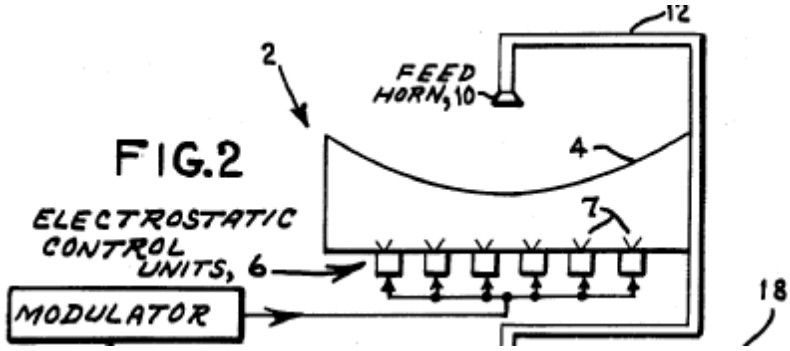

H01Q 3/02

using mechanical movement of aerial or aerial system as a whole

Definition statement

This place covers:

The whole antenna moves, i.e. one needs.

Rotary joints, couplers between fixed TIR and rotating antenna. Rotary joints belong to H01P.

Illustrative example of subject-matter classified in this group:

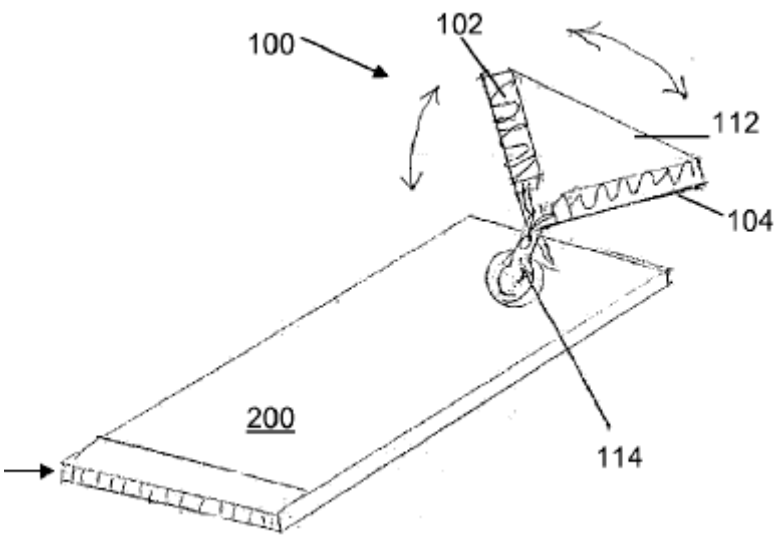

H01Q 3/04

for varying one co-ordinate of the orientation

Definition statement

This place covers:

Either azimuth, elevation or another axis of rotation, e.g. Polar axis for leo orbit satellites.

Illustrative example of subject-matter classified in this group:

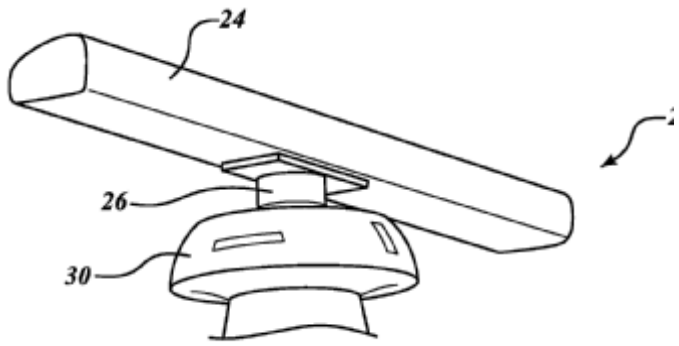

H01Q 3/06

over a restricted angle

Definition statement

This place covers:

Illustrative example of subject-matter classified in this group:

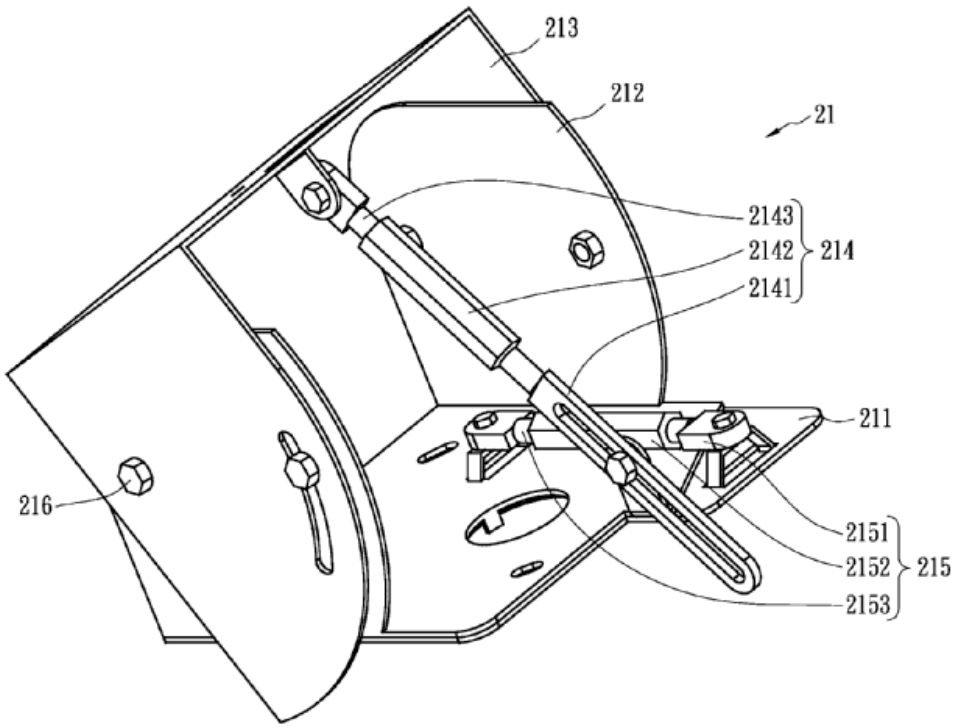

H01Q 3/08

for varying two co-ordinates of the orientation

Definition statement

This place covers:

Normally variation of two (orthogonal) angles, e.g. Azimuth and elevation, polar and cross-polar angles.

Illustrative example of subject-matter classified in this group:

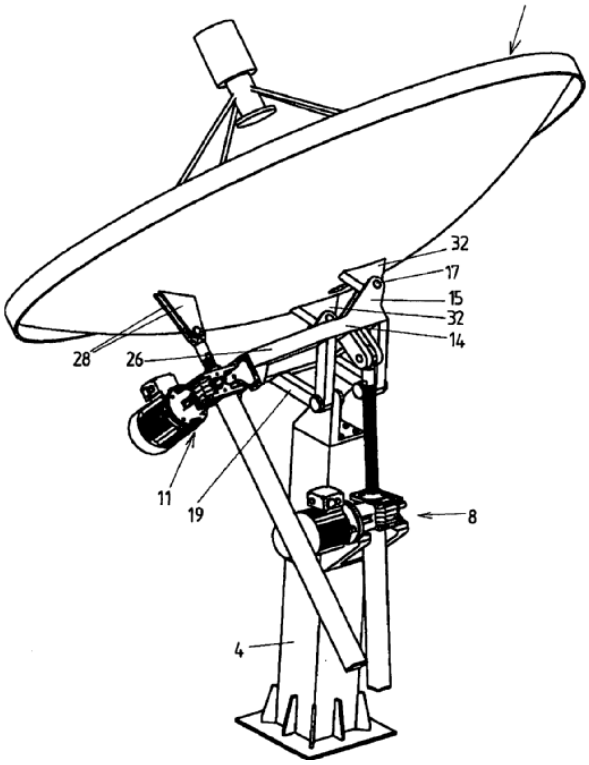

H01Q 3/10

to produce a conical or spiral scan

Definition statement

This place covers:

The direction of maximum radiation generates a cone whose vertex angle is in the order of the antenna half-power beamwidth.

Illustrative example of subject-matter classified in this group:

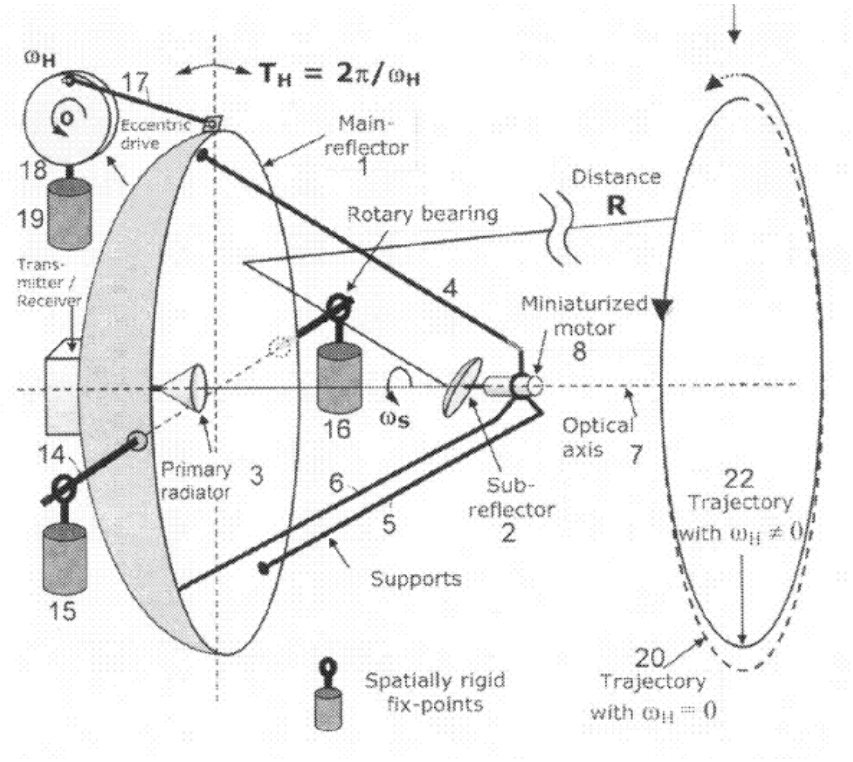

H01Q 3/12

using mechanical relative movement between primary active elements and secondary devices of aerials or aerial systems {(positioning H01Q 1/1264)}

Definition statement

This place covers:

The movement is relative, one element moves w.r.t. another one, e.g. feed w.r.t. lens, sub-reflector w.r.t. feed. See also lower classes for specific cases of relative movement.

Illustrative example of subject-matter classified in this group:

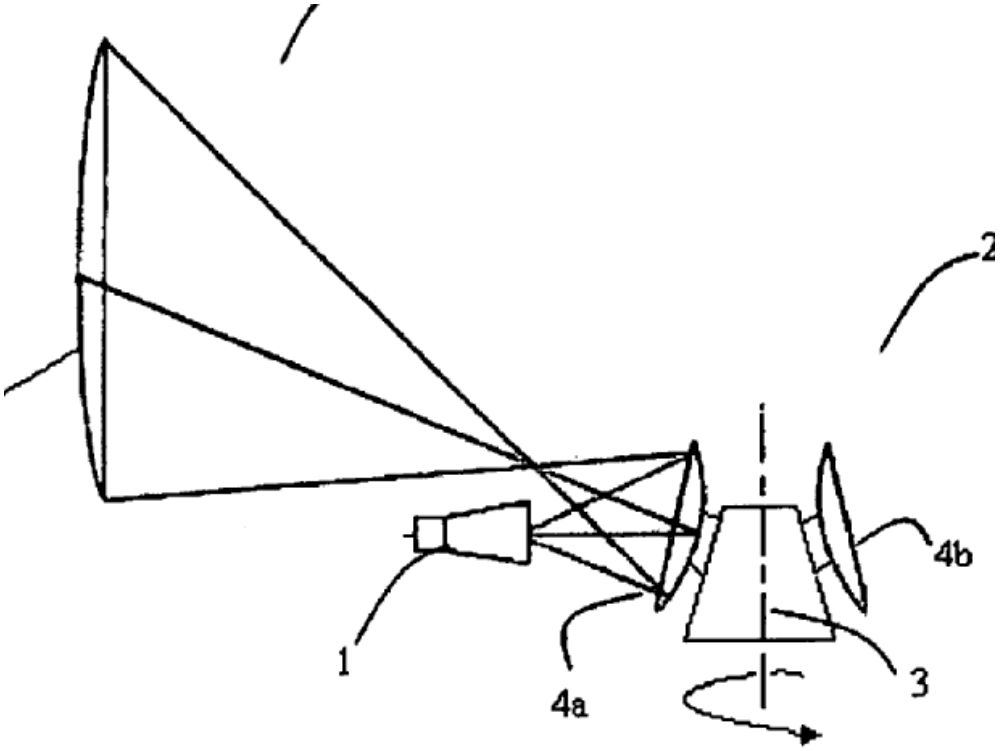

References

Informative references

Attention is drawn to the following places, which may be of interest for search:

Positioning	H01Q 1/1264

H01Q 3/14

for varying the relative position of primary active element and a refracting or diffracting device

Definition statement

This place covers:

Refracting device, like lens.

Diffracting device, like grating.

Illustrative example of subject-matter classified in this group:

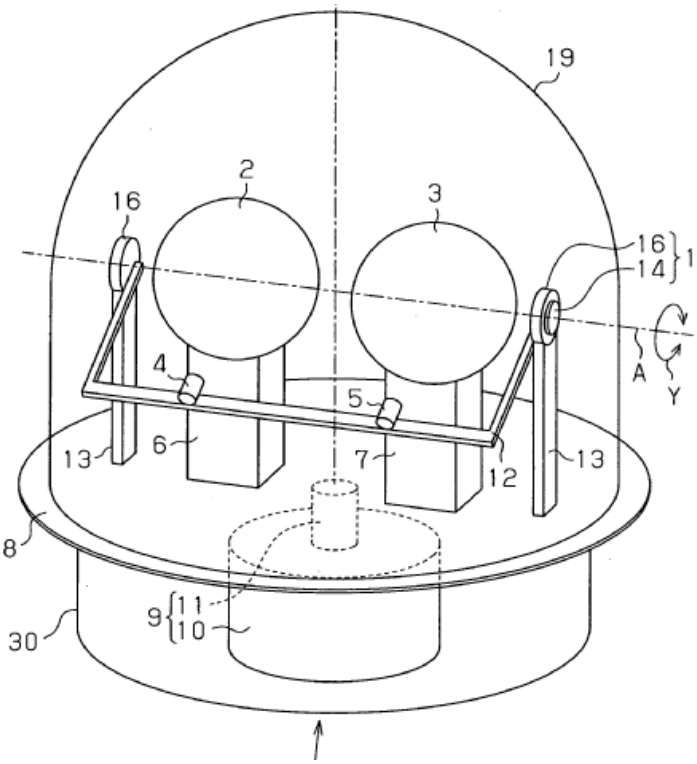

H01Q 3/16

for varying relative position of primary active element and a reflecting device

Definition statement

This place covers:

Primary active element, like feed, radiating element.

Reflecting device, like sub reflector or main reflector.

Illustrative example of subject-matter classified in this group:

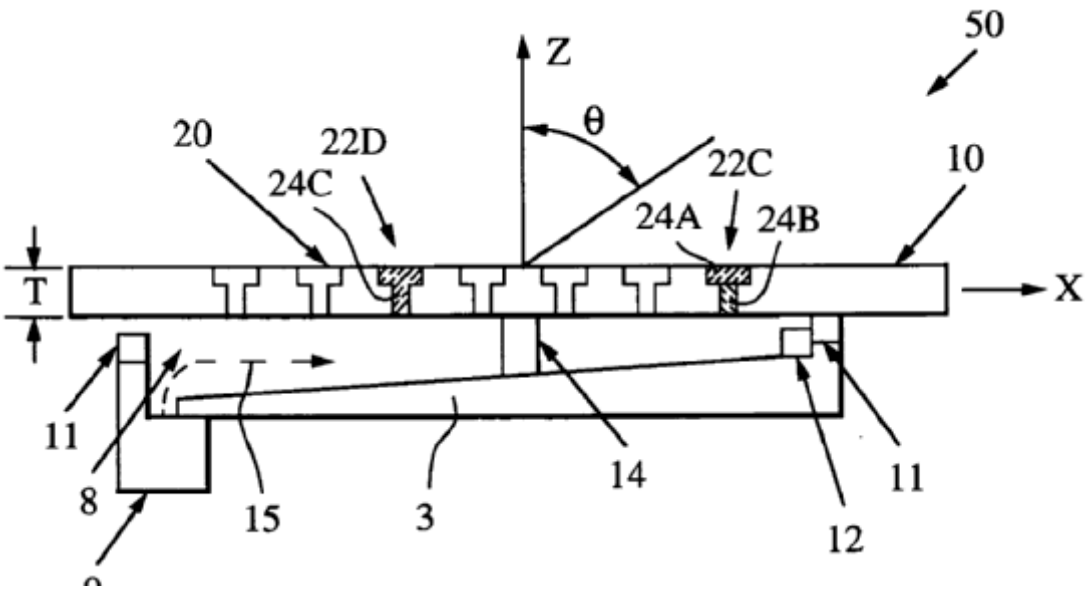

H01Q 3/18

wherein the primary active element is movable and the reflecting device is fixed

Definition statement

This place covers:

Mechanically moving the feed of the antenna, that is steerable-beam antenna.

Feed-motion, off-axis fed, that is lateral displacement of the feed.

Illustrative example of subject-matter classified in this group:

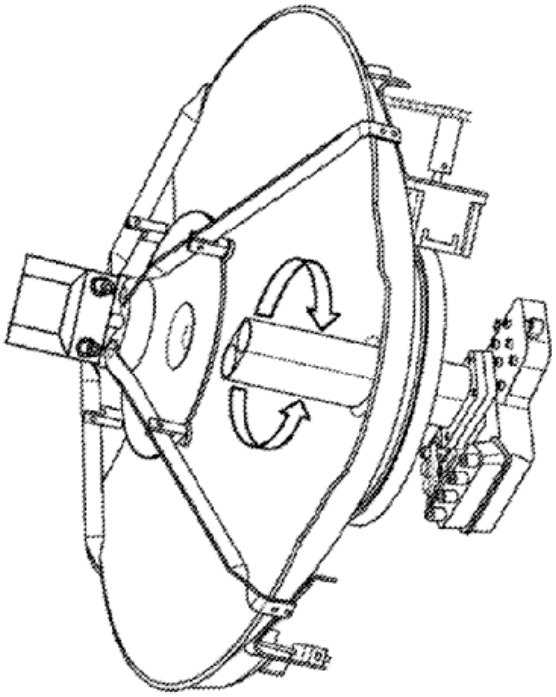

H01Q 3/20

wherein the primary active element is fixed and the reflecting device is movable

Definition statement

This place covers:

Reflector tilt; subreflector scanning.

Illustrative example of subject-matter classified in this group:

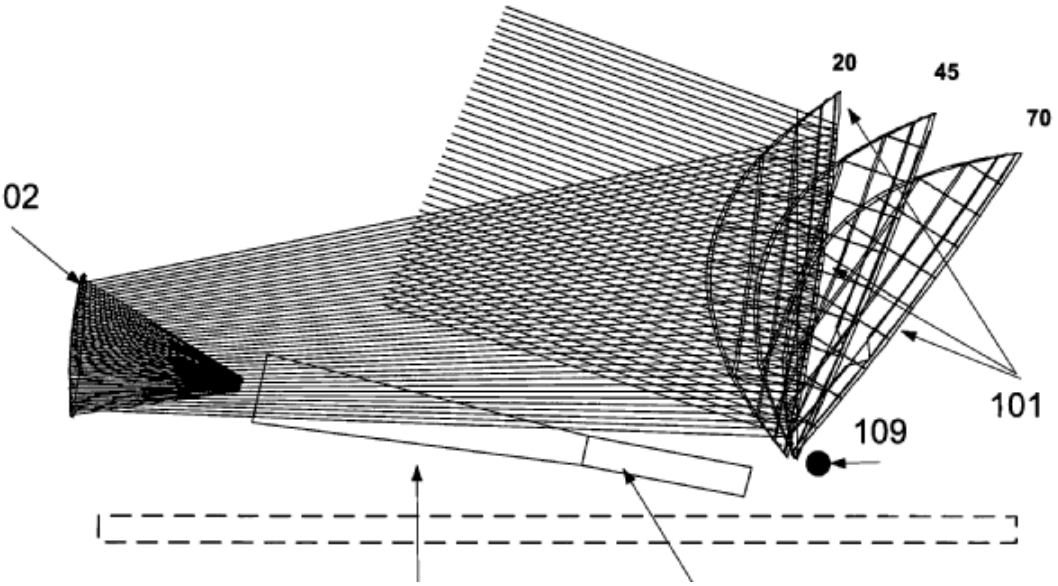

H01Q 3/22

varying the orientation in accordance with variation of frequency of radiated wave

Definition statement

This place covers:

Type of electronic scanning, i.e. scanning an antenna beam by electronic or electric means without moving parts, inertialess scanning.

Frequency scanning is defined as that the direction of the radiated beam is controlled by changing the operating frequency. It is based on the fact that the phase delay through a length of transmission line changes with frequency; no phase shifters.

Frequency hopping means that the frequency of the transmitter abruptly changes (or hops) in accordance with a pseudo-random code sequence; the receiver tracks these changes.

With a phased array without phase shifters, frequency hopping will inevitably result in beam scanning.

Illustrative example of subject-matter classified in this group:

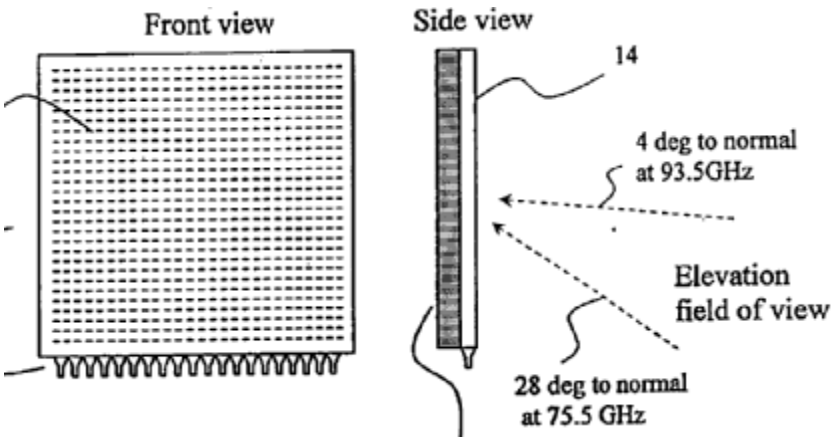

H01Q 3/24

varying the orientation by switching energy from one active radiating element to another, e.g. for beam switching

Definition statement

This place covers:

Scanning of a radiating beam by selecting a particular fixed beam from an available set of fixed beams.

Due to the switching, there exists only a single beam at a time. The non-selected elements are simply not used. This concept is distinctively different from having a multiple beam array antenna with a beam former for which only a specific beam port is selected. In this specific case all the active elements will radiate/receive at all times.

For example, if the direction of main radiation of two antenna elements is different, selecting one or the other element will change the direction of the beam.

Illustrative example of subject-matter classified in this group:

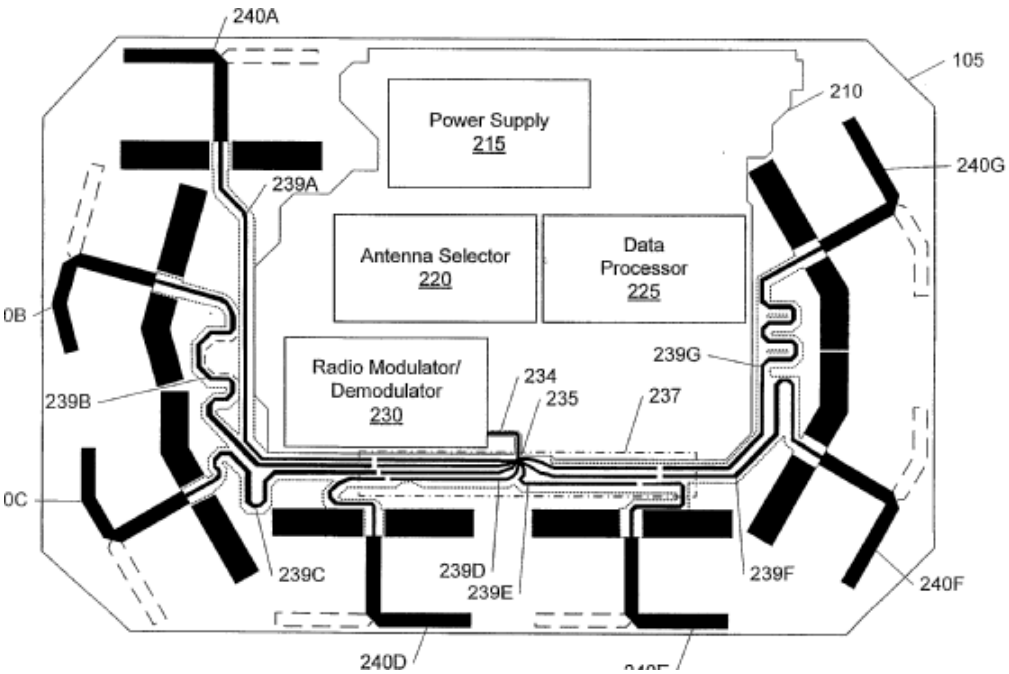

References

Informative references

Attention is drawn to the following places, which may be of interest for search:

At receiving station, e.g. space diversity	H04B 7/08 and subgroups for diversity systems

H01Q 3/242

{Circumferential scanning}

Definition statement

This place covers:

Circumferential scanning means that the beams scan around the circumference e.g. with a cylindrical array, an array on a cylinder with transfer switches (double-pole, double or four throw switches).

Illustrative example of subject-matter classified in this group:

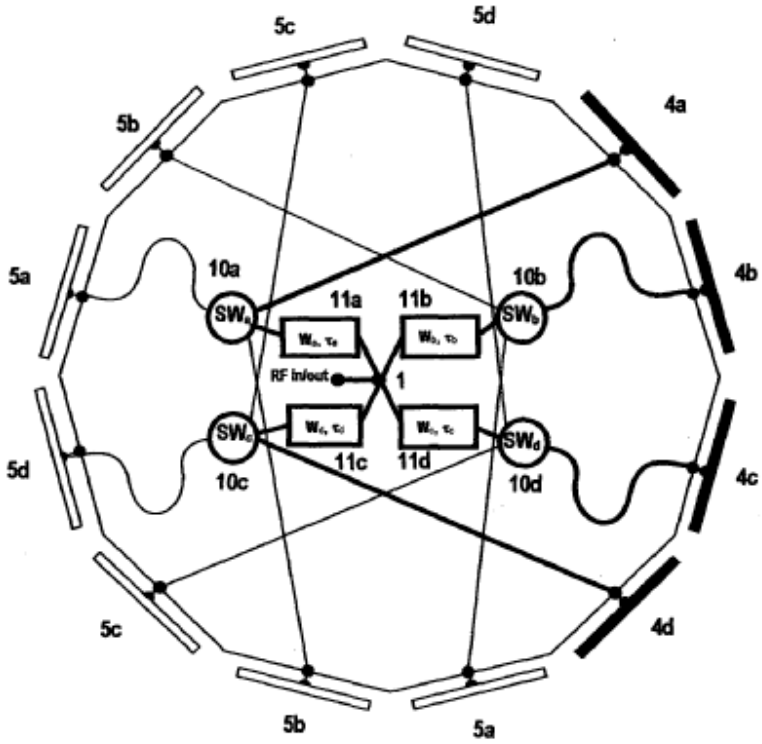

H01Q 3/245

{in the focal plane of a focussing device}

Definition statement

This place covers:

The switching in fact causes the phase center of the active element to change, e.g. lateral displacement. As a consequence, also the produced beam changes direction.

Illustrative example of subject-matter classified in this group:

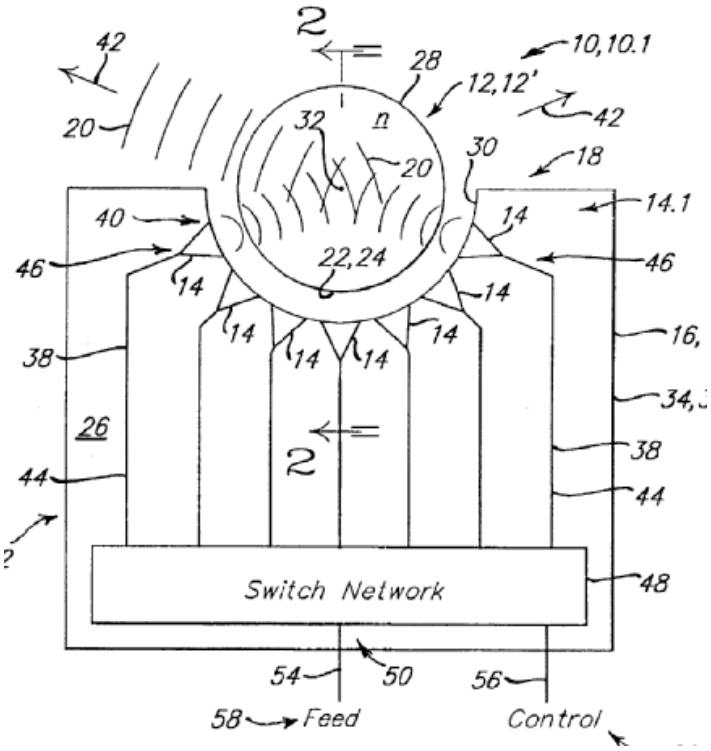

H01Q 3/247

{by switching different parts of a primary active element}

Definition statement

This place covers:

On-off switching of elements or parts of a single element.

Illustrative example of subject-matter classified in this group:

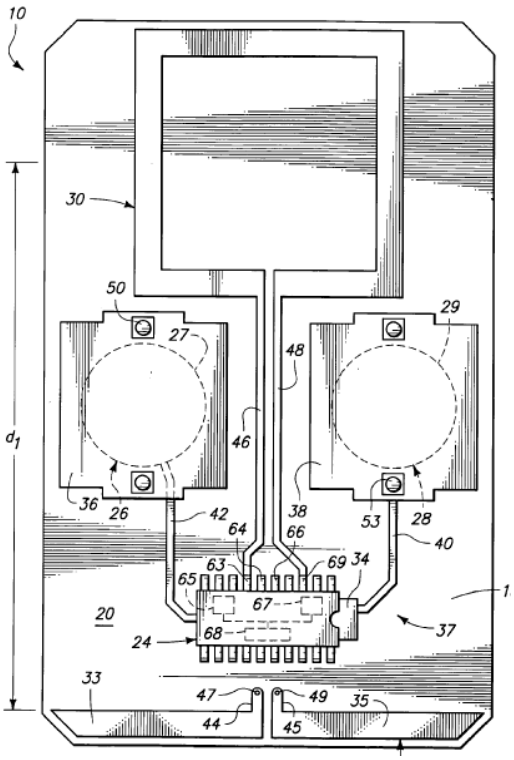

H01Q 3/26

varying the relative phase or relative amplitude of energisation between two or more active radiating elements; varying the distribution of energy across a radiating aperture ({H01Q 3/12} , H01Q 3/22, H01Q 3/24 take precedence; {use of steered beams for mobile service area coverage H04W 16/28})

Definition statement

This place covers:

Varying the phase or amplitude:

- beam can be scanned by using phase shifters to change the excitation phases of its array elements;
- and forming a desired radiation pattern by amplitude control via amplifiers/attenuators.

Varying the distribution of energy across aperture:

- amplitude distribution (uniform or non-uniform) over a aperture, near or on an antenna, on which it is convenient to make assumptions over the field values at external points e.g. applying amplitude taper for reducing sidelobes as Taylor or Dolph-Chebyshew distributions.

Illustrative example of subject-matter classified in this group:

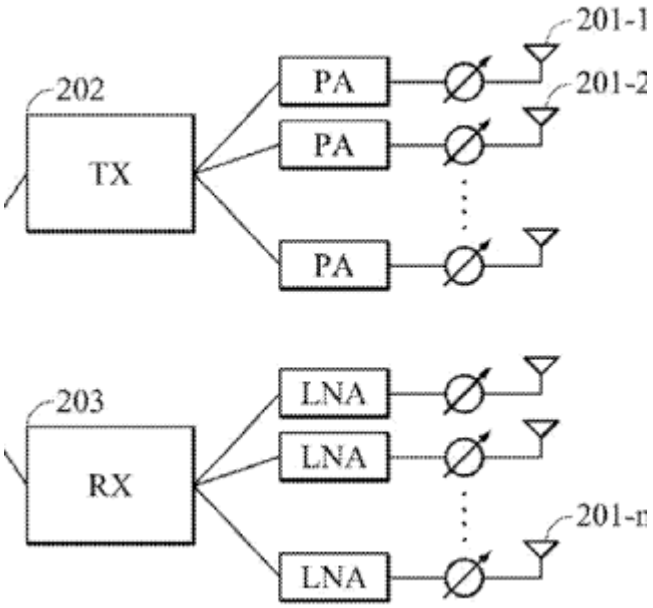

References

Limiting references

This place does not cover:

Arrangements for changing or varying the orientation or the shape of the directional pattern of the waves radiated from an aerial or aerial system	H01Q 3/00
Using mechanical relative movement between primary active elements and secondary devices of aerials or aerial systems	H01Q 3/12
Arrangements for changing or varying the orientation or the shape of the directional pattern of the waves radiated from an aerial or aerial system using mechanical relative movement between primary active elements and secondary devices of aerials or aerial systems	H01Q 3/12
Arrangements for varying the orientation in accordance with variation of frequency of radiated wave	H01Q 3/22
Arrangements for varying the orientation by switching energy from one active radiating element to another, e.g. for beam switching	H01Q 3/24

Informative references

Attention is drawn to the following places, which may be of interest for search:

Use of steered beams for mobile service area coverage	**H04Q7/3615**

Glossary of terms

In this place, the following terms or expressions are used with the meaning indicated:

Beam forming	weighting and summing the elements signals

Weighting	phase and amplitude applied to the signals; changing the weighting of one element to the other changes the pattern in direction and beamwidth/ beamform
Analog beamforming (RF beamforming)	phase and/or amplitude control takes place in the RF domain
Digital beamforming	phase and/or amplitude control takes place inside a beamforming computer / processor, after having sampled the RF signals using an A/D convertor.In a digital beamforming array, the received signals are detected and digitized at the element level; the digitized signals are then processed in a digital computer to form a desired beam on transmit and/or receive; processing of the digitized signals in time and amplitude according to a software program.

Synonyms and Keywords

In patent documents, the following abbreviations are often used:

ESA	electronically scanned array

H01Q 3/2605

{Array of radiating elements provided with a feedback control over the element weights, e.g. adaptive arrays (tracking G01S 3/42)}

Definition statement

This place covers:

Adaptivity: automatic signal-dependent weight adjustment to reduce unwanted signals and/or emphasize the desired signal or an antenna system having circuit elements associated with its radiating elements such that one or more of the antenna properties are controlled by the received signal.

Different Weight-determining Algorithms in the Adaptive Control Processor.

Applebaum-Howell circuit.

Illustrative example of subject-matter classified in this group:

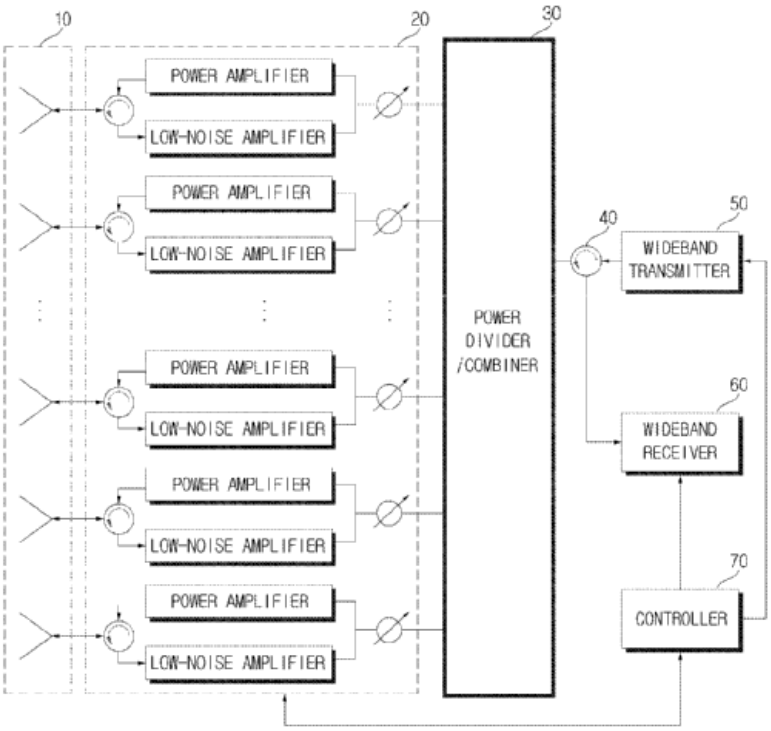

References

Informative references

Attention is drawn to the following places, which may be of interest for search:

Tracking	G01S 3/42
The adaptive array algorithms should not be classified here, but belong to	H04B 7/08 and subgroups

Glossary of terms

In this place, the following terms or expressions are used with the meaning indicated:

LMS	Least-Mean-Square algorithm
MUSIC	Multiple Signal Classification
ESPRIT	Estimation of Signal Parameters via Rotational Invariance Techniques
DOA	Direction of Arrival

H01Q 3/2611

{Means for null steering; Adaptive interference nulling}

Definition statement

This place covers:

Illustrative example of subject-matter classified in this group:

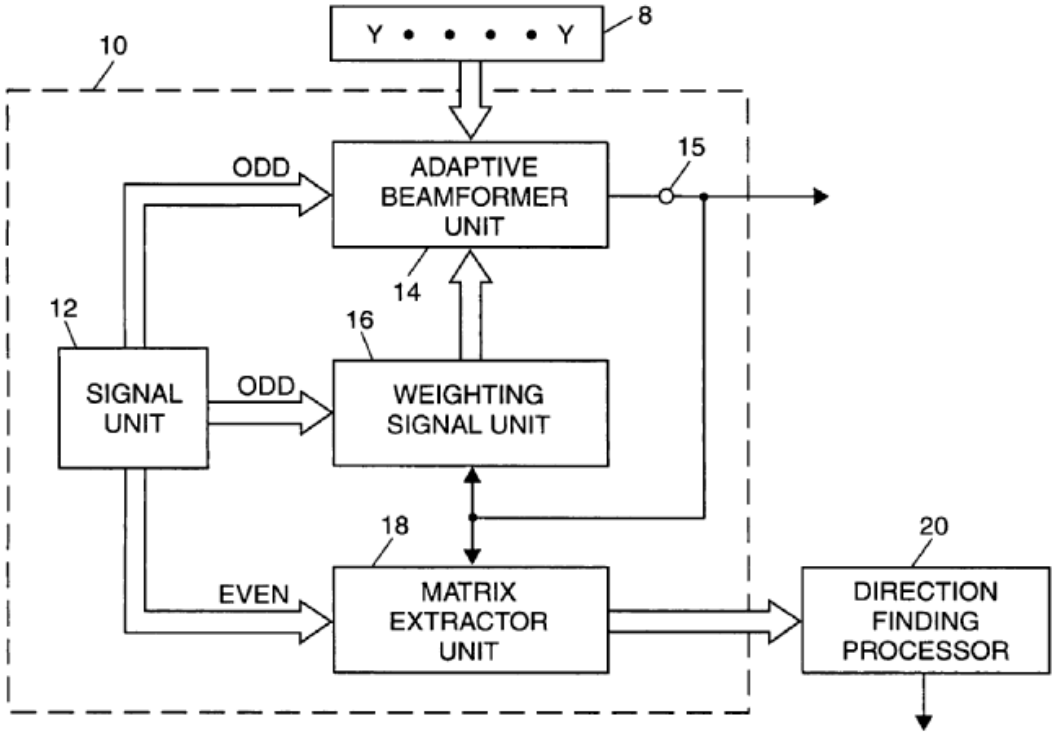

Glossary of terms

In this place, the following terms or expressions are used with the meaning indicated:

Null steering	to control, usually electronically, the direction at which a directional null appears in the radiation pattern or directing the peak of the directivity to the direction of arrival or the location of a signal source and by directing a null point of the directivity to the direction of an incoming disturbance wave

H01Q 3/2617

{Array of identical elements}

Definition statement

This place covers:

Illustrative example of subject-matter classified in this group:

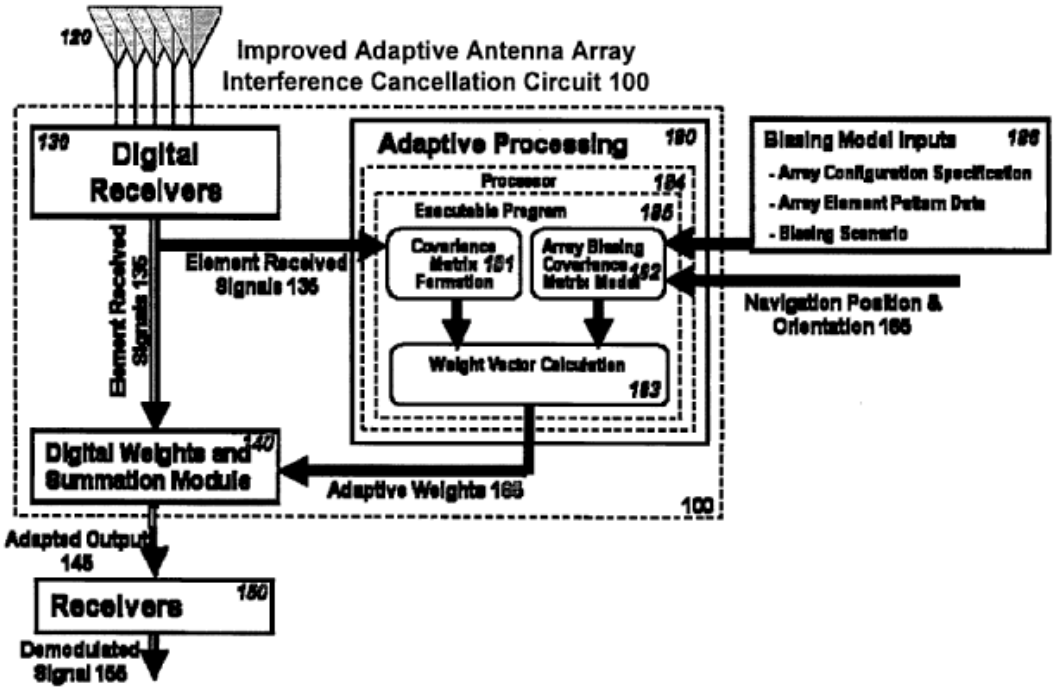

H01Q 3/2623

{composed of two antennas}

Definition statement

This place covers:

Illustrative example of subject-matter classified in this group:

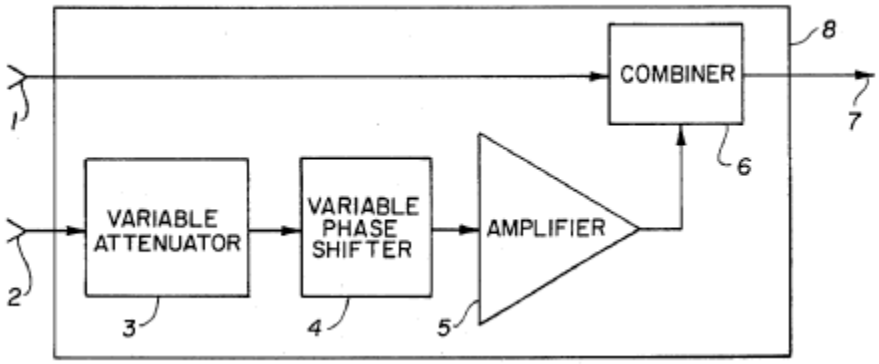

H01Q 3/2629

{Combination of a main antenna unit with an auxiliary antenna unit}

Definition statement

This place covers:

Sidelobe canceller, sidelobe blanker: destructive interference is used for blanking a null in a pattern by subtraction of signals having identical amplitude and phase: this causes a distinct null in the pattern.

Illustrative example of subject-matter classified in this group:

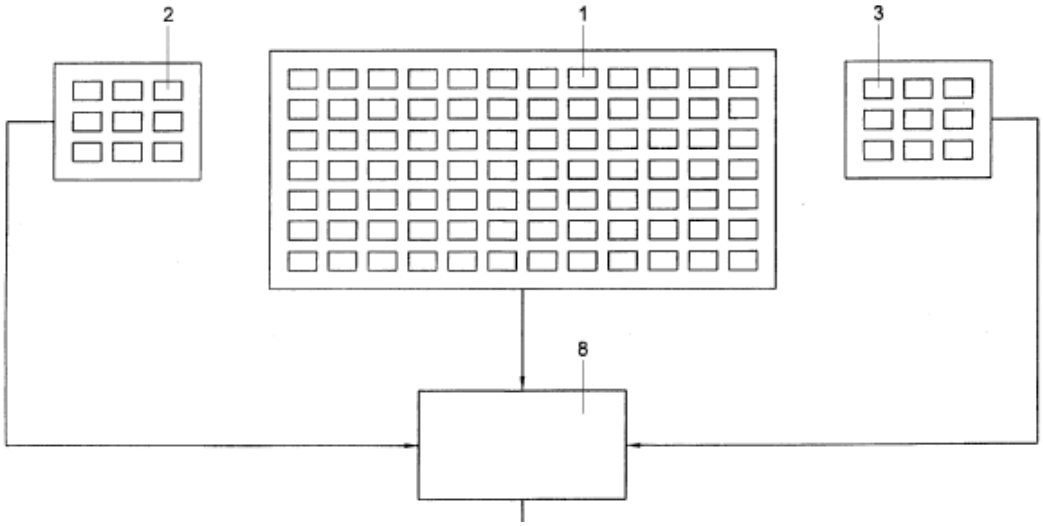

H01Q 3/2635

{the auxiliary unit being composed of a plurality of antennas}

Definition statement

This place covers:

Illustrative example of subject-matter classified in this group:

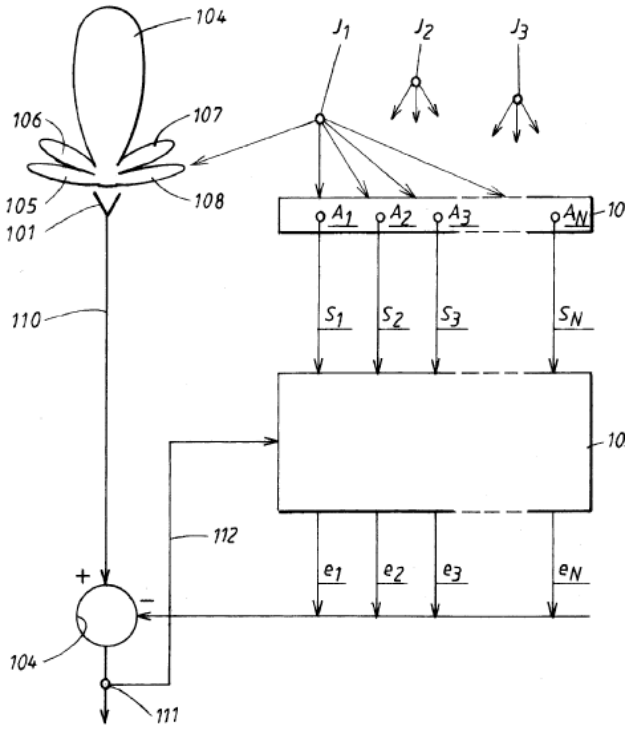

H01Q 3/2641

{being secundary elements, e.g. reactively steered}

Definition statement

This place covers:

Adjusting terminating reactances, e.g. Varicap diodes.

Illustrative example of subject-matter classified in this group:

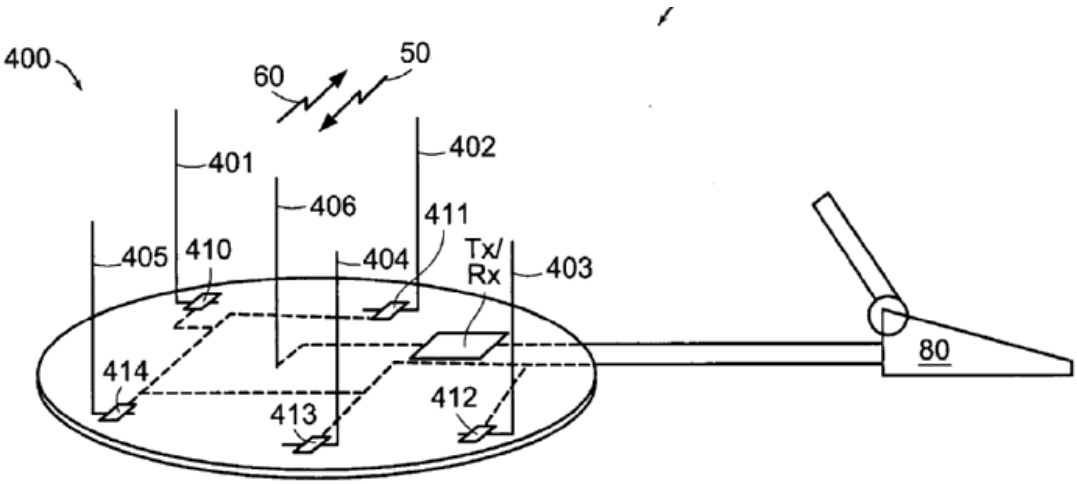

H01Q 3/2647

{Retrodirective arrays}

Definition statement

This place covers:

Perform beam steering in an automatic fashion by retransmitting an incoming selfphased signal in a phase conjugated manner. The received signal is then retransmitted in the direction it was originated from. Active devices can be added to enhance the return signal (that is, active retrodirective antenna system); as retro-reflector or retro-reflective transponder; Van Atta array.

References

Informative references

Attention is drawn to the following places, which may be of interest for search:

Wherein continuous-type signals are transmitted	G01S 13/82

H01Q 3/2652

{Self-phasing arrays}

Definition statement

This place covers:

A receiving antenna system that introduces a phase distribution among the array elements so as to maximize the received signal, regardless of the direction of incidence; Contrast with: Retrodirective.

H01Q 3/2658

{Phased-array fed focussing structure}

Definition statement

This place covers:

Phased array in/at the focal point of a lens or parabolic/hyperbolic dish.

Illustrative example of subject-matter classified in this group:

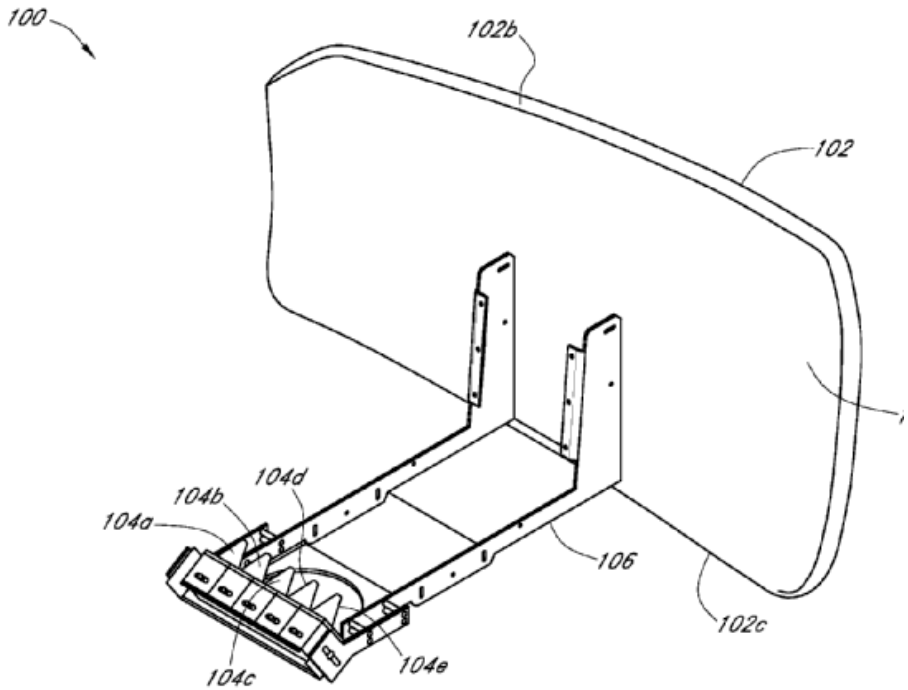

H01Q 3/2664

{electrically moving the phase centre of a radiating element in the focal plane of a focussing device (switching H01Q 3/245, phased-array feeds H01Q 3/2658)}

Definition statement

This place covers:

This gives the possibility of shaping the beam that is incident upon the focussing device, as well as its angle of incidence.

Examples:

- rotating obstacles in front of a conical horn;
- aperture shaping: the aperture of a feed horn or of a focused reflector surface is modified.

Illustrative example of subject-matter classified in this group:

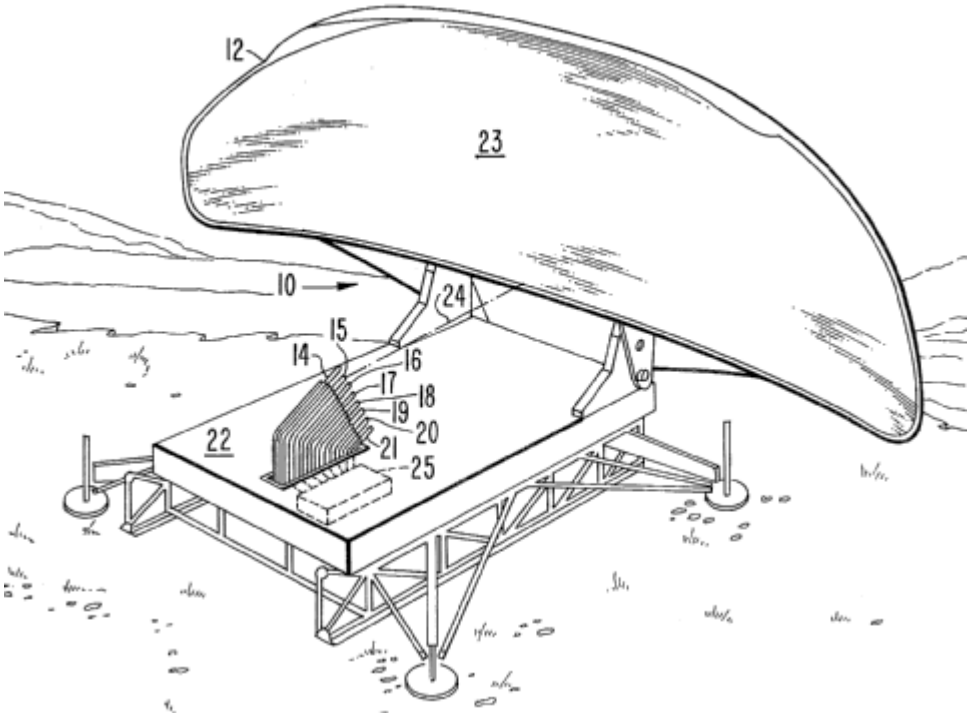

References

Limiting references

This place does not cover:

Switching	H01Q 3/245
Phased-array feeds	H01Q 3/2658

H01Q 3/267

{Phased-array testing or checking devices (measuring radiation diagrams of aerials G01R 29/10)}

Definition statement

This place covers:

Testing means diagnosis of faults by integral monitors; with built-in performance monitoring and measurement of aperture distribution; near-field measurements with a probe antenna; built-in test equipment BITE.

Calibration means to standardize by determining the deviation from standard so as to ascertain the proper correction factors, i.e. diagnosis of errors in terms of amplitude and/or phase.

Illustrative example of subject-matter classified in this group:

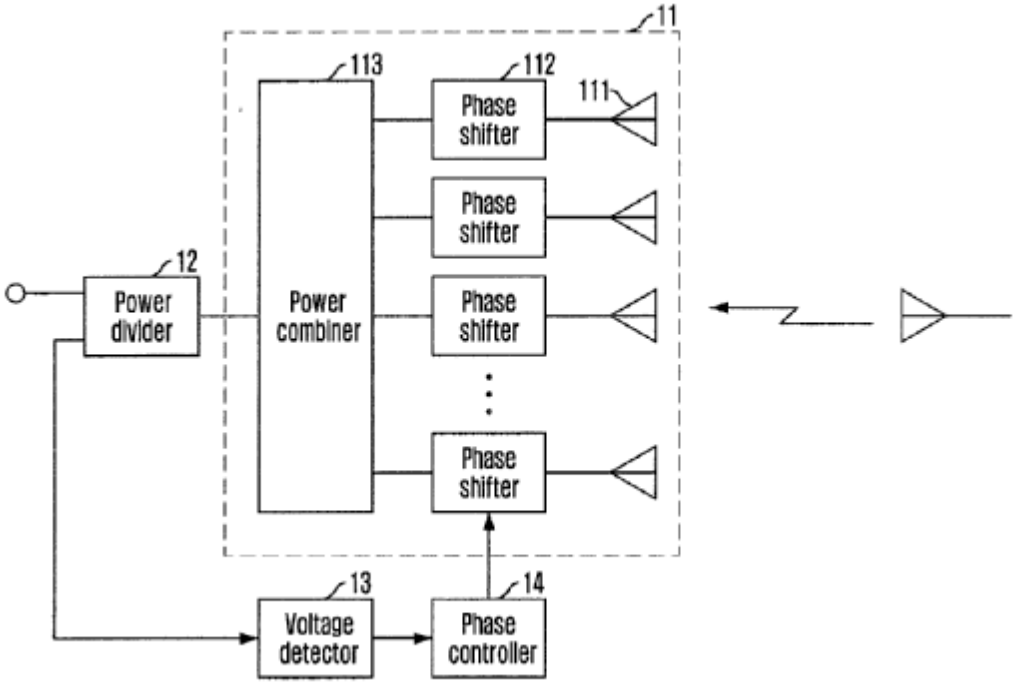

References

Informative references

Attention is drawn to the following places, which may be of interest for search:

Anything dealing with the calibration of phased arrays is classified here, e.g. single carrier, multi-carrier systems, measuring radiation diagrams of aerials	G01R 29/10

H01Q 3/2676

{Optically controlled phased array (optical fibre networks H03H 2/003)}

Definition statement

This place covers:

Optical control means beam scanning by the use of photoelectric conversion i.e. optical to microwave conversion and reverse with lasers, photodiodes and fibers as true time delay elements; photonic time shifter; electric-optical conversion elements.

Illustrative example of subject-matter classified in this group:

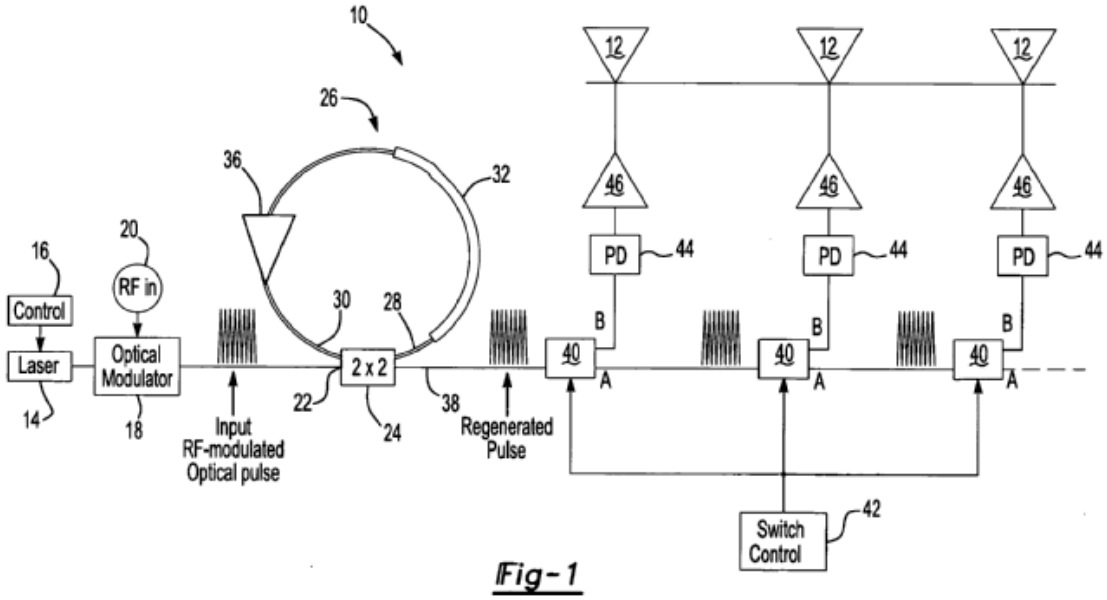

Fig-1

References

Informative references

Attention is drawn to the following places, which may be of interest for search:

Optical fibre networks	H03H 2/003

H01Q 3/2682

{Time delay steered arrays}

Definition statement

This place covers:

Other method beside beam steering/scanning with phase shifters using delay lines which introduce a frequency independent time delay; e.g. switchable delay lines; Blass matrix.

Illustrative example of subject-matter classified in this group:

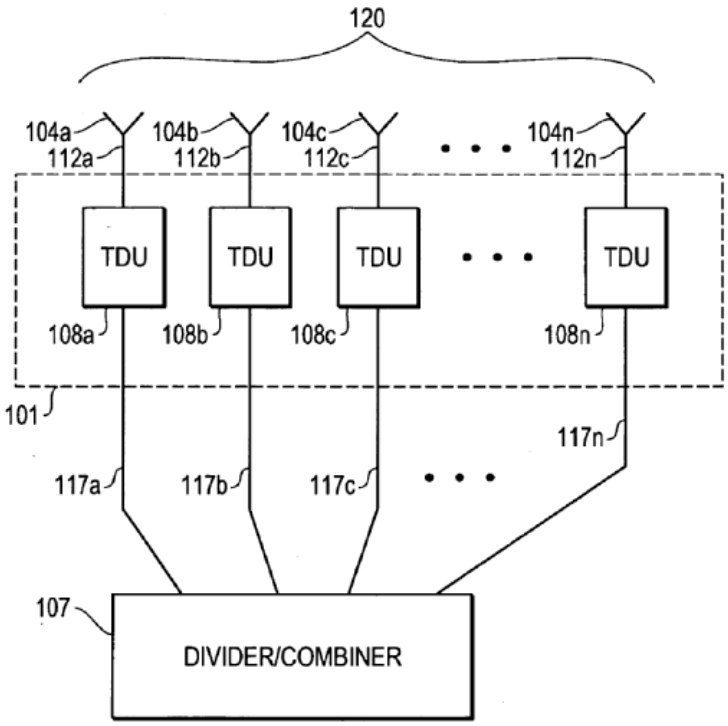

H01Q 3/2688

{using acoustic or magnetostatic wave devices}

Definition statement

This place covers:

An input electrical signal is launched as acoustic signal by an input transducer. The acoustic signal undergoes a finite delay as it propagates over the medium and then reconverted to electrical signal. Surface Acoustic Wave (SAW) or Magnetostatic Wave (MSW) with YIG material as ferrimagnetic material.

Illustrative example of subject-matter classified in this group:

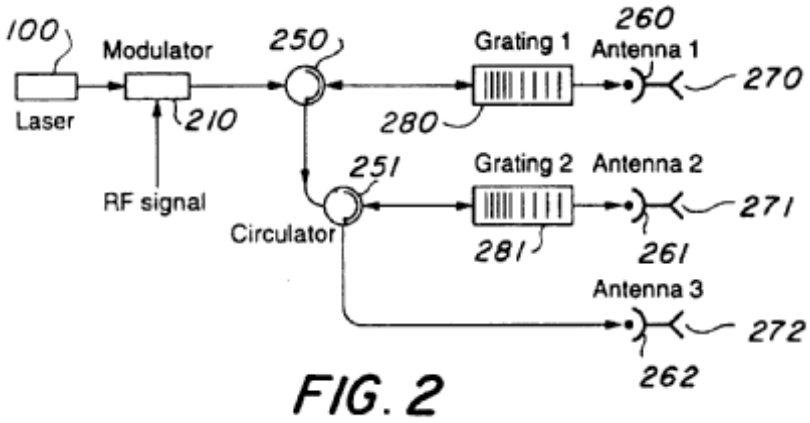

H01Q 3/2694

{using also variable phase-shifters (H01Q 3/2688 takes precedence)}

Definition statement

This place covers:

For example: time delays in sub-array, phase shifters in each element.

The time delay becomes important in wideband applications where 2*pi phase shift do not suffice.

See also: R.C. Hansen, Phased array antennas, section 6.2.

Illustrative example of subject-matter classified in this group:

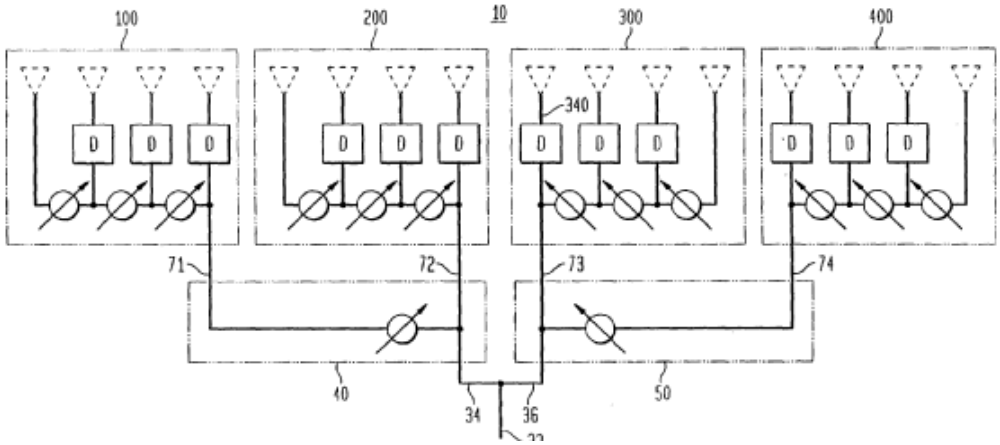

References

Limiting references

This place does not cover:

Using acoustic or magnetostatic wave devices	H01Q 3/2688

H01Q 3/28

varying the amplitude

Definition statement

This place covers:

Varying the amplitude for shaping the antenna pattern as beamwidth and sidelobes; shaped beams, varying the amplitude distribution of the radiating aperture e.g. by amplitude taper:

- with power dividers, e.g. as directional coupler; hybrid ring; magic T, branch-line coupler;
- with attenuators,
- with amplifiers.

Illustrative example of subject-matter classified in this group:

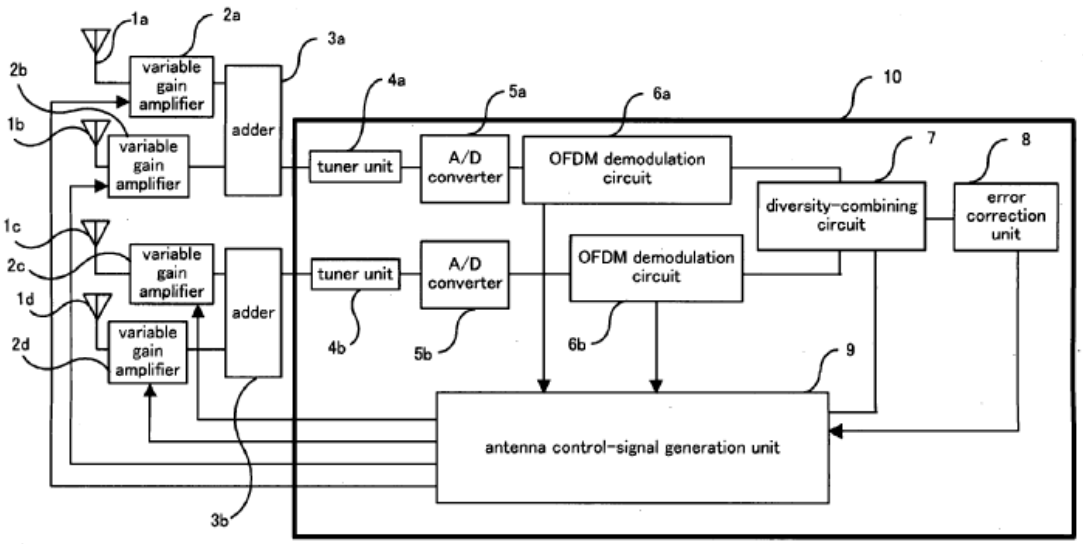

H01Q 3/30

varying the {relative} phase {between the radiating elements of an array (H01Q 3/2605, H01Q 3/2658, H01Q 3/2682, H01Q 3/44 take precedence)}

Definition statement

This place covers:

Varying the distribution of the phase over any path, surface or radiation pattern for steering, scanning the beam.

Phase shifters can be broadly classified as mechanical or electronic, depending on whether the phase control is achieved through mechanical or electronic tuning.

Illustrative example of subject-matter classified in this group:

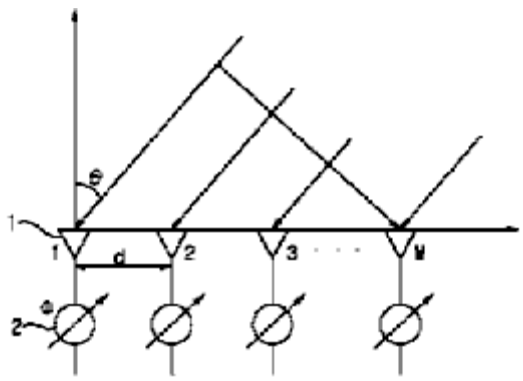

References

Limiting references

This place does not cover:

Array of radiating elements provided with a feedback control over the element weights, adaptive arrays	H01Q 3/2605

Phased-array fed focussing structure	H01Q 3/2658
Time delay steered arrays	H01Q 3/2682
Varying the electric or magnetic characteristics of reflecting, refracting, or diffracting devices associated with the radiating element	H01Q 3/44

H01Q 3/32

by mechanical means

Definition statement

This place covers:

Mechanical phase shifters are generally constructed in coaxial line or metallic waveguides. The insertion phase is varied by means of mechanical tuning, such as variation in the physical length or rotation-displacement of a dielectric slab inside the waveguide.

Illustrative example of subject-matter classified in this group:

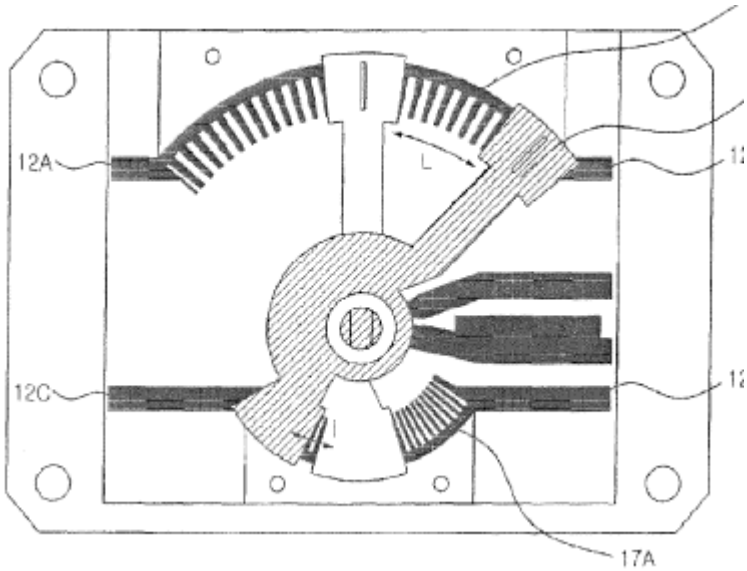

H01Q 3/34

by electrical means (active lenses or reflecting arrays H01Q 3/46)

Definition statement

This place covers:

Electronic phase shifters as:

- ferrite phase shifter and
- semiconductor device phase shifter that use semiconductor junction devices as electronic control element.

Illustrative example of subject-matter classified in this group:

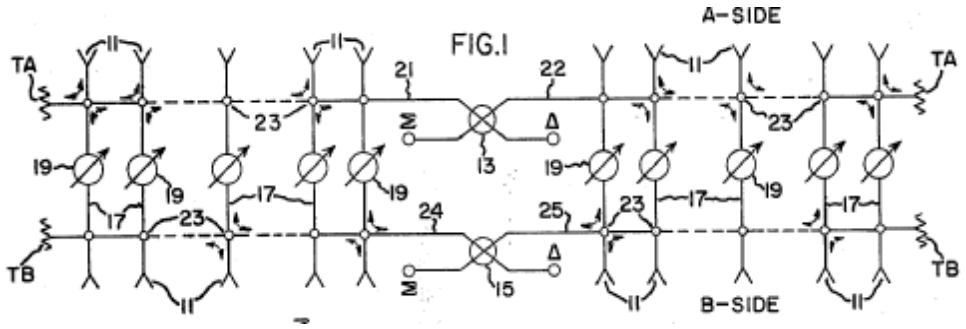

References

Limiting references

This place does not cover:

Active lenses or reflecting arrays	H01Q 3/46

H01Q 3/36

with variable phase-shifters {(combined with time delay devices H01Q 3/2682)}

Definition statement

This place covers:

With continuous variation (analog phase shifter).

In discrete step (digital): too coarse resolution will lead to discretisation lobes.

Ferrite phase shifters:

- enclosed in waveguide;
- using a microstrip configuration; ferrimagnetic material; Faraday rotator phase shifter; either non reciprocal or reciprocal.

Semiconductor device phase shifters:

- with PIN-diodes;
- Varactor diodes, Schottky diodes;
- FET switches.

Illustrative example of subject-matter classified in this group:

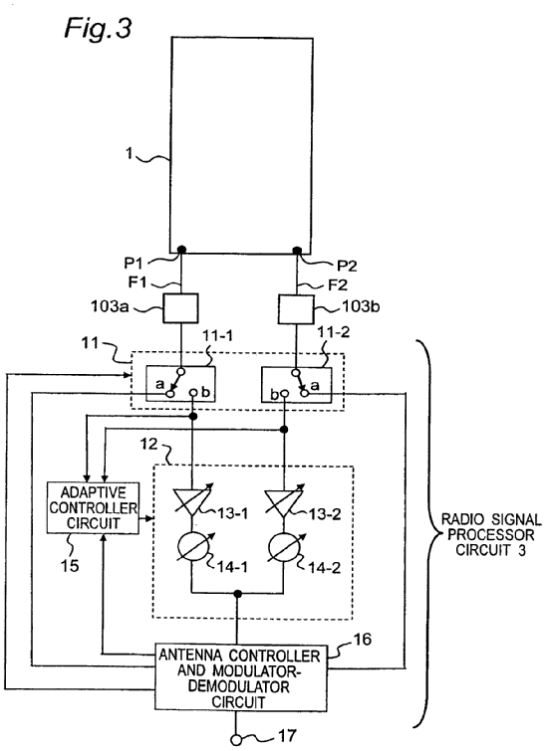

References

Informative references

Attention is drawn to the following places, which may be of interest for search:

Combined with time delay devices	H01Q 3/2682
Phase shifter as such should be dealt with in	H01P

H01Q 3/38

the phase-shifters being digital

Definition statement

This place covers:

Digital means in steps; e.g. as 3 bit phase shifter(180°,90°,45°):

- with hybrid;
- with circulator;
- with loaded line;
- with switched line.

Illustrative example of subject-matter classified in this group:

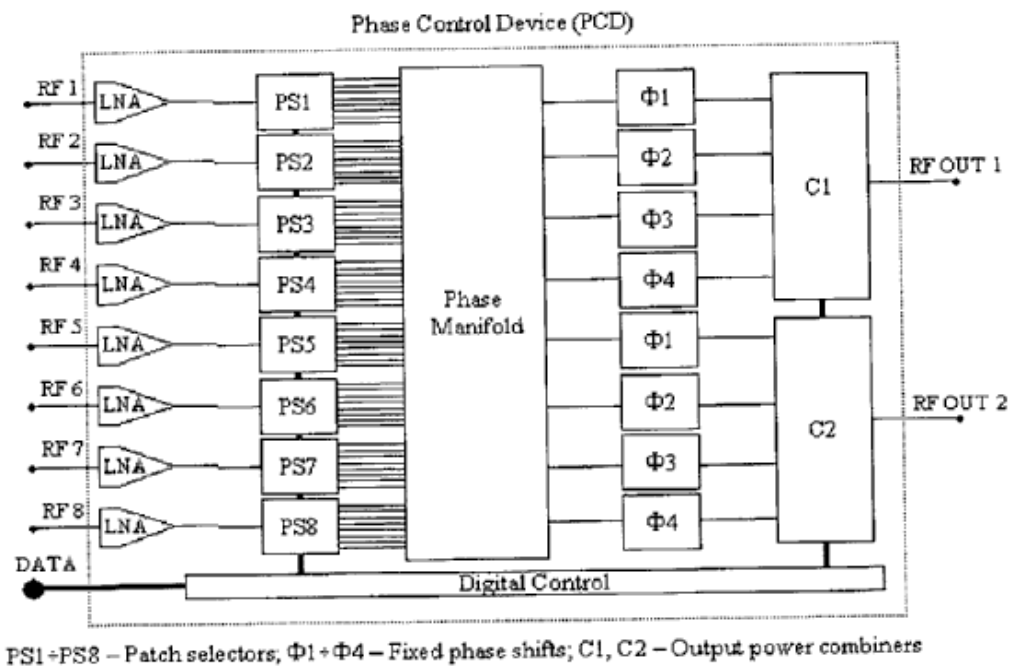

Figure. 1.Block diagram of the MMIC

H01Q 3/385

{Scan control logics}

Definition statement

This place covers:

Illustrative example of subject-matter classified in this group:

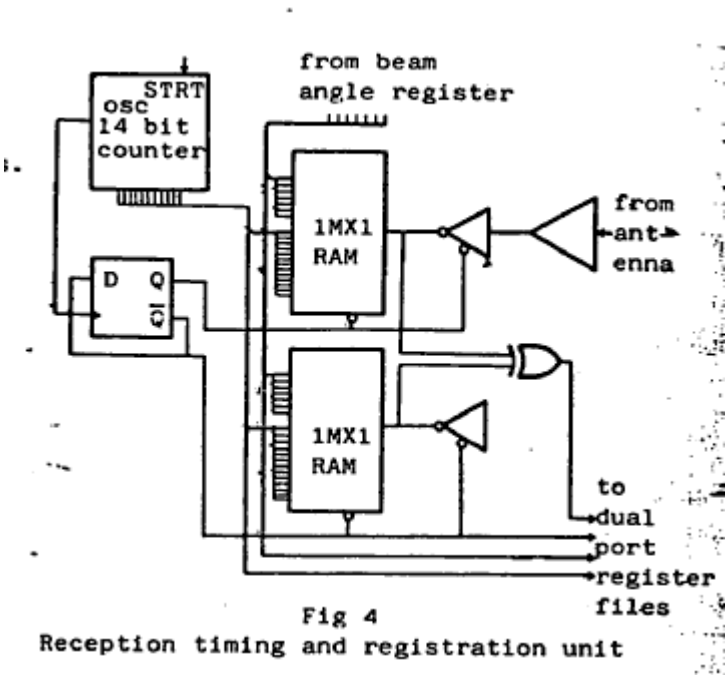

H01Q 3/40

with phasing matrix

Definition statement

This place covers:

Circuit configuration whereby signal inputs are connected with antenna elements via a matrix with phase shifters and hybrid couplers; Beam Forming Matrix / Network (BFM,BFN). The inputs of the matrix are referred to beam ports, since the signal of this port corresponds to a beam direction. The BFN therefore works as a kind of Fourier transformer.

For example:

Butler -Matrix: Network with number of inputs and outputs; multibeam; beam scanning by sequentially feeding the elements with the phase increment provided by the matrix. The phase gradient over the outputs is dependent on the beam port chosen.

Blass-Matrix: a number of travelling wave feed lines are connected to a linear array; at each crossover point a small will be coupled and the path difference between the input and each element control the beam direction.

Illustrative example of subject-matter classified in this group:

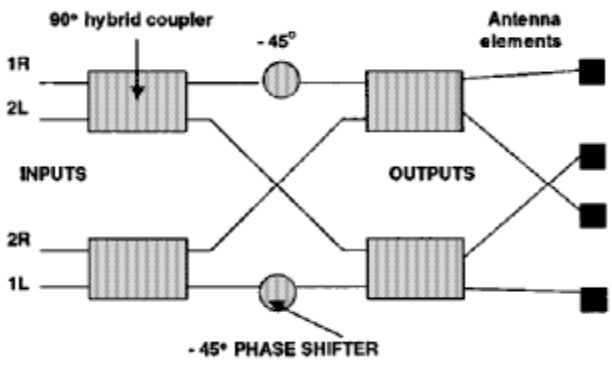

H01Q 3/42

using frequency-mixing {(H01Q 3/2676 takes precedence)}

Definition statement

This place covers:

Beam forming is carried out on Intermediate Frequency (I.F.). I.F. is formed when the R.F. signal coming from the antenna elements is mixed with local oscillator to convert the R.F. down to a more convenient frequency, where, for example, accurate phase shifts are easier to be performed.

Illustrative example of subject-matter classified in this group:

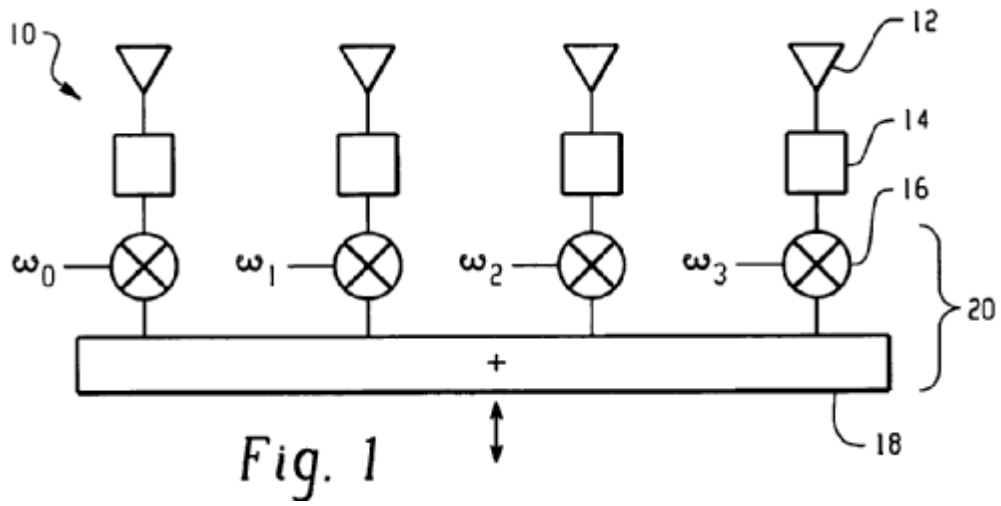

Fig. 1

References

Limiting references

This place does not cover:

Optically controlled phased array	H01Q 3/2676

H01Q 3/44

varying the electric or magnetic characteristics of reflecting, refracting, or diffracting devices associated with the radiating element

Definition statement

This place covers:

- With ferroelectric materials: have the property of variable dielectric constant with applied DC bias voltage; ferroelectric scanning.
- With ferrite using magnetic phase control by changes the effective permeability by magnetic bias.

Illustrative example of subject-matter classified in this group:

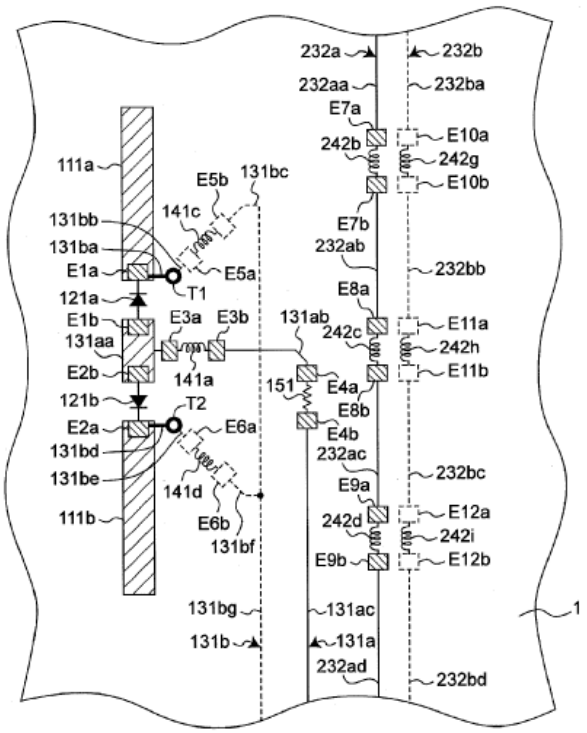

H01Q 3/443

{varying the phase velocity along a leaky transmission line (frequency scanning H01Q 3/22; non-resonant leaky-waveguide or transmission-line aerials H01Q 13/20)}

Definition statement

This place covers:

Typically material parameters are varied to achieve the desired effect. The antenna is a leaky antenna.

Illustrative example of subject-matter classified in this group:

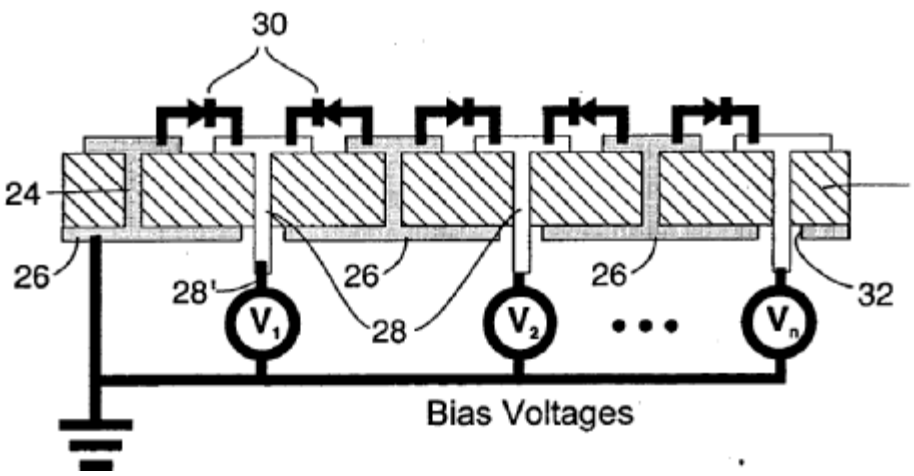

References

Limiting references

This place does not cover:

Frequency scanning	H01Q 3/22
Non-resonant leaky-waveguide or transmission-line aerials	H01Q 13/20

H01Q 3/446

{the radiating element being at the centre of one or more rings of auxiliary elements}

Definition statement

This place covers:

For example: one active element and a number of passive elements, reactively loaded and adjustable. Irrespective of the antenna types: here only the principle is classified.

Illustrative example of subject-matter classified in this group:

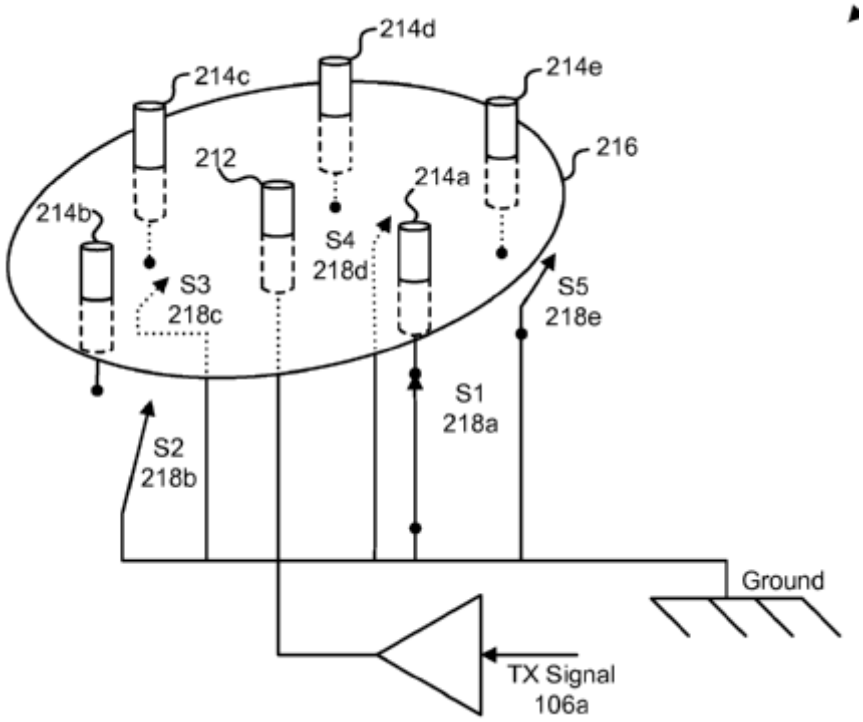

References

Informative references

Attention is drawn to the following places, which may be of interest for search:

The primary active element being end-fed and elongated	H01Q 19/32

H01Q 3/46

Active lenses or reflecting arrays

Definition statement

This place covers:

Reflective array: An antenna consisting of a feed and an array of reflecting elements arranged on a surface and adjusted so that the reflected waves from the individual elements combine to produce a prescribed secondary pattern. The reflecting elements can be waveguides containing electrical phase shifters and terminated by short circuits.

Active lens: array of active units (receive-amplify-transmit), that is transponders, in which also phase shifts can be introduced. The array behaves as a lens, and high power can be generated.

Active lens is therefore of the transmission type, whereas a reflecting array is of the reflection type.

Illustrative examples of subject-matter classified in this group:

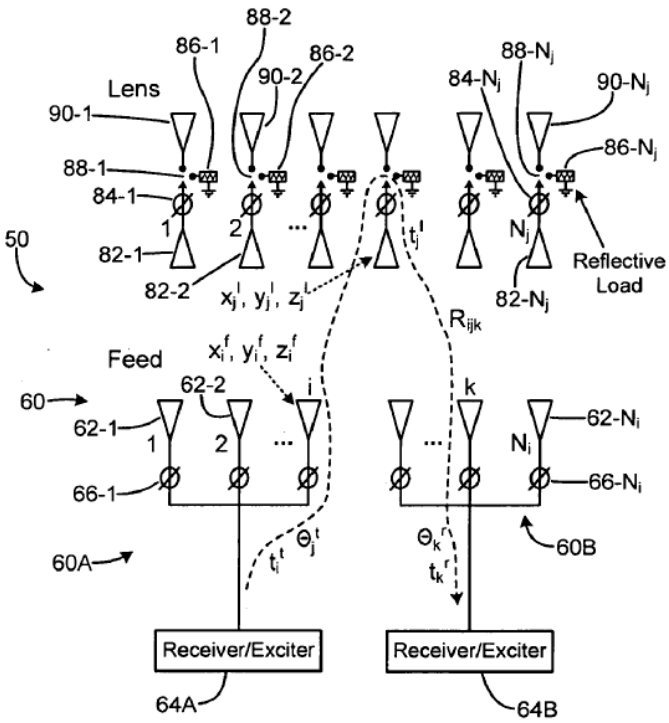

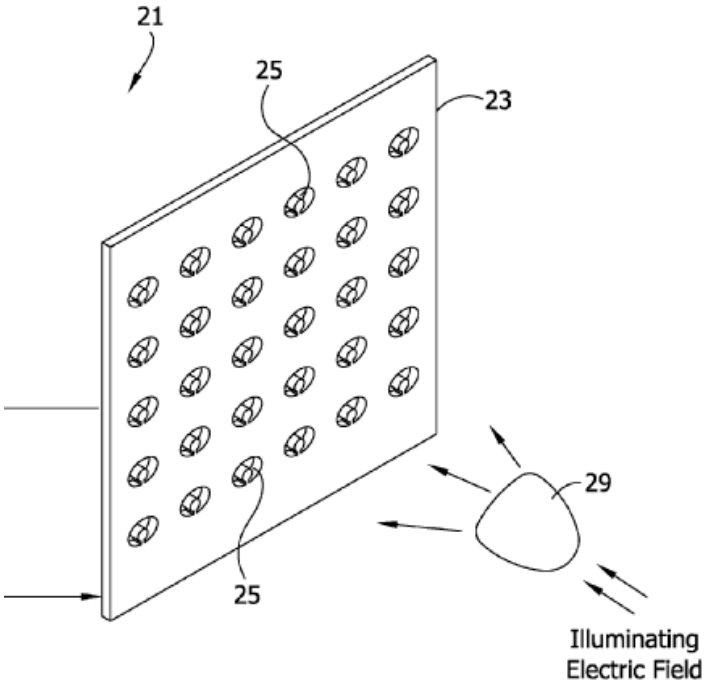

H01Q 5/00

Arrangements for simultaneous operation of aerials on two or more different wavebands, e.g. dual-band or multi-band arrangements (combinations of separate active aerial units operating in different wavebands and connected to a common feeder system H01Q 21/30)

Definition statement

This place covers:

An antenna designed to operate simultaneously, without modification, in any of a number of pre-set frequency bands.

Antennas with (inherent) broadband characteristics are classified in the antenna type, e.g. folded or loaded or extended surface monopole antennas with broadband are classified in the relevant antenna type groups.

Remark: It is sometimes difficult to draw a clear line between some of the groups, but here are some clear examples representing the underlying ideas.

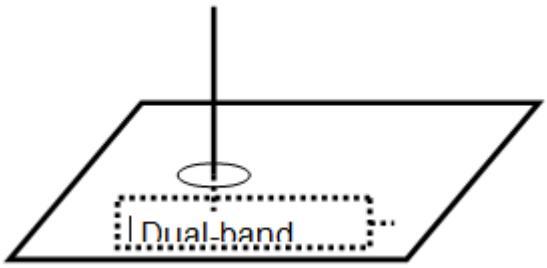

Dual-band imp-match: H01Q 5/335

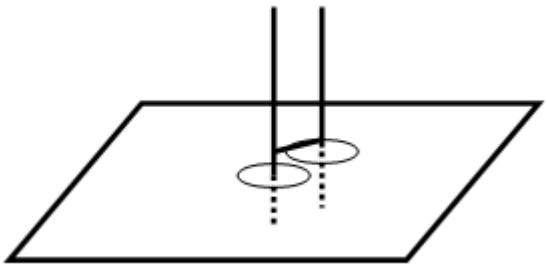

Two feed points: H01Q 5/35

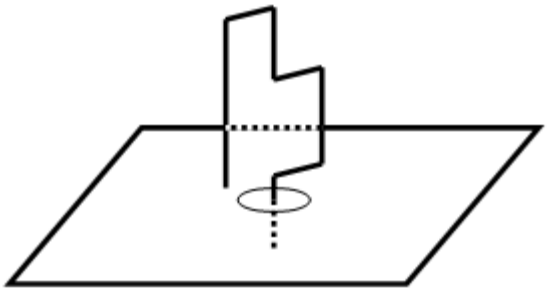

Different paths: H01Q 5/364

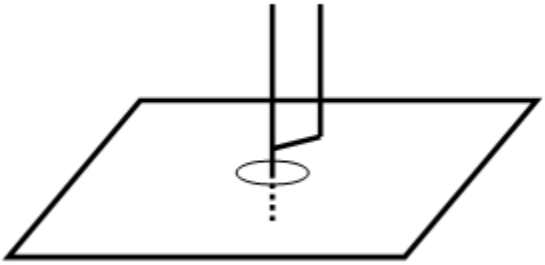

Branching: H01Q 5/371

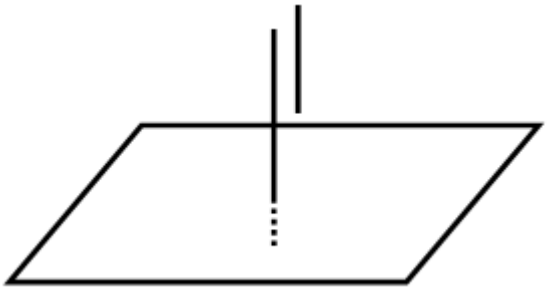

Parasitic: H01Q 5/378

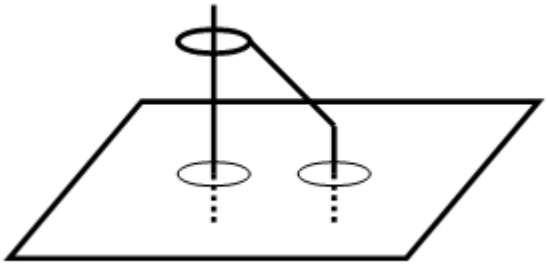

Imbricated, interleaved: H01Q 5/40

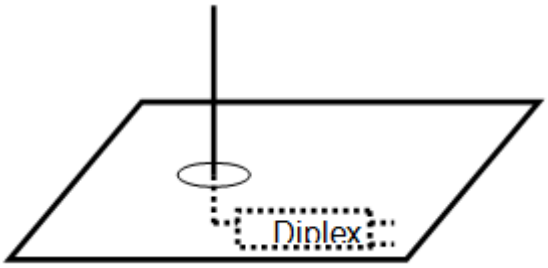

Special feed arrangement: H01Q 5/50

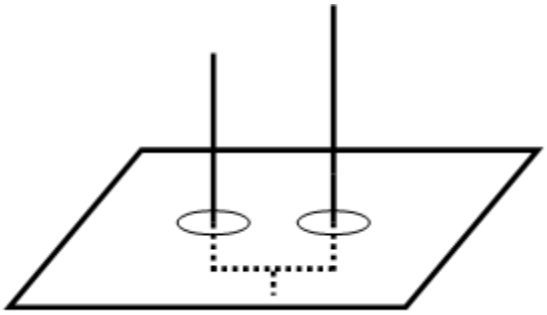

Common feeder: H01Q 21/30

References

Limiting references

This place does not cover:

Ground plane features per se	H01Q 1/48
The changing per se of electrical (for example by switching) or physical length of the antenna	H01Q 9/14

Informative references

Attention is drawn to the following places, which may be of interest for search:

Receivers or transmitters adapted for more than one waveband	H04B 1/005

H01Q 5/10

Resonant aerials

Definition statement

This place covers:

Multiband aspects for resonant antennas (lambda/4 or lambda/2) as e.g. vertical monopole or horizontal dipole antennas.

Single resonant multiband dipole- or monopole antennas.

Resonant antennas with trap circuits or stub elements.

Illustrative example of subject-matter classified in this group:

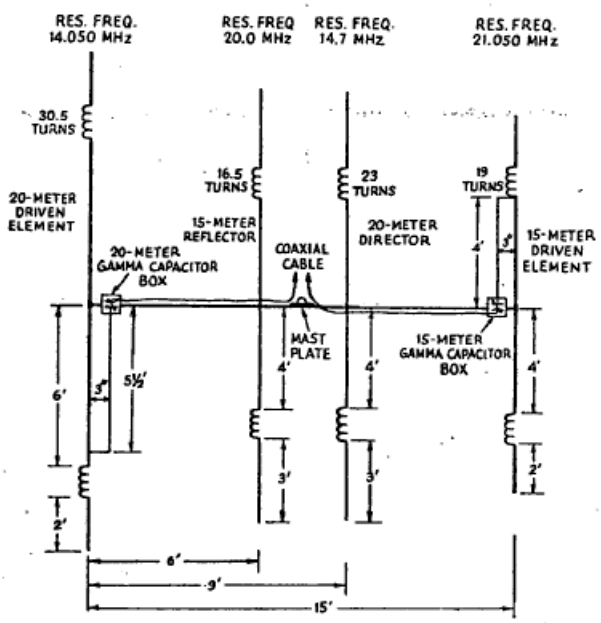

H01Q 5/15

for operation of centre-fed aerials comprising one or more collinear, substantially straight or elongated active elements

Definition statement

This place covers:

Collinear means a linear arrangement of radiating elements with their axis lying in a straight line (vertical or horizontal), e.g. multi-band trap centre-fed dipole.

Illustrative example of subject-matter classified in this group:

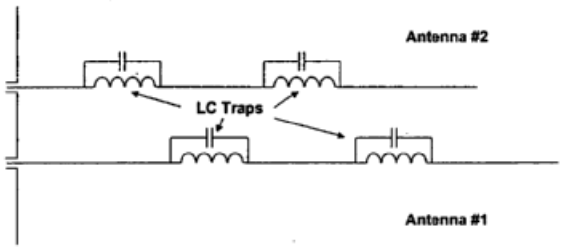

Figure 1. The LC trapped-wire-antenna design.

H01Q 5/20

characterised by the operating wavebands

Definition statement

This place covers:

Antennas with specific applications related to two or more different wavebands, where focus is on the application and not on how the achievement of the different wavebands is done.

References

Limiting references

This place does not cover:

The achievement of operation on two or more different wavebands	H01Q 5/30, H01Q 5/40, H01Q 5/50,

H01Q 5/22

RF wavebands combined with non-RF wavebands, e.g. infrared or optical

Definition statement

This place covers:

Arrangements of antennas with operation on both RF and non-RF wavebands.

References

Informative references

Attention is drawn to the following places, which may be of interest for search:

IR, Optics	G01J, G02
Integrated light sensitive semiconductor devices	H01L 27/14

H01Q 5/25

Ultra-wideband [UWB] systems, e.g. multiple resonance systems; Pulse systems

References

Informative references

Attention is drawn to the following places, which may be of interest for search:

Non-sinusoidal waves.	H01Q 9/005

H01Q 5/28

Arrangements for establishing polarisation or beam width over two or more different wavebands

Definition statement

This place covers:

Antenna arrangement operating on two or more wavebands, where certain properties are achieved over these bands, such as constant polarisation, beam width, etc.

H01Q 5/30

Arrangements for providing operation on different wavebands

Definition statement

This place covers:

Antennas with special features making the antenna operable over two or more different frequency bands.

Antennas considered have a single fed radiating elements, connected radiating elements, or a combination of a fed radiating element and a non-directly fed element (parasitic element).

References

Informative references

Attention is drawn to the following places, which may be of interest for search:

Imbricated or interleaved structures	H01Q 5/40

H01Q 5/314

using frequency dependent circuits or components, e.g. trap circuits or capacitors

Definition statement

This place covers:

Antennas having frequency dependent circuits in order to create multiple resonances, for example by trap circuits blocking parts of the antenna at certain frequencies.

H01Q 5/335

at the feed, e.g. for impedance matching

Definition statement

This place covers:

Frequency dependent circuits at the (single) feed, and which are responsible for the multiple wavebands.

The circuit typically has one input and one output.

References

Informative references

Attention is drawn to the following places, which may be of interest for search:

Impedance matching diplexers	H01Q 5/50
Impedance matching, filters per se	H03H

H01Q 5/342

for different propagation modes (H01Q 5/314 takes precedence)

References

Limiting references

This place does not cover:

Different modes due to frequency dependent circuits	H01Q 5/314

H01Q 5/35

using two or more simultaneously fed points

Definition statement

This place covers:

Illustrative example of subject-matter classified in this group:

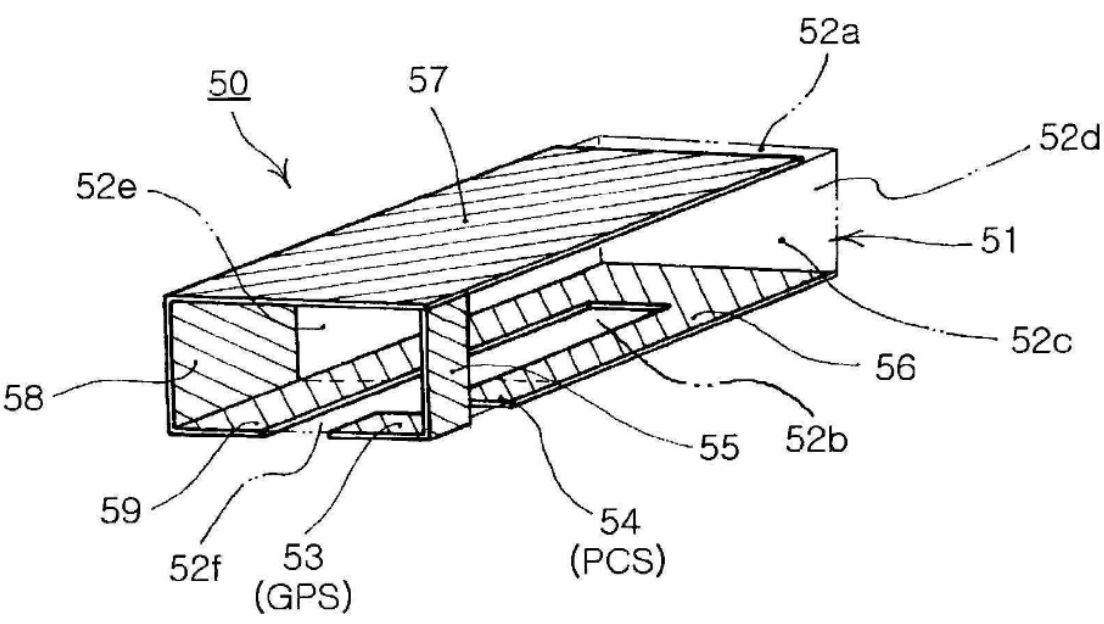

H01Q 5/364

Creating multiple current paths

Definition statement

This place covers:

Antennas having different current paths, for example:

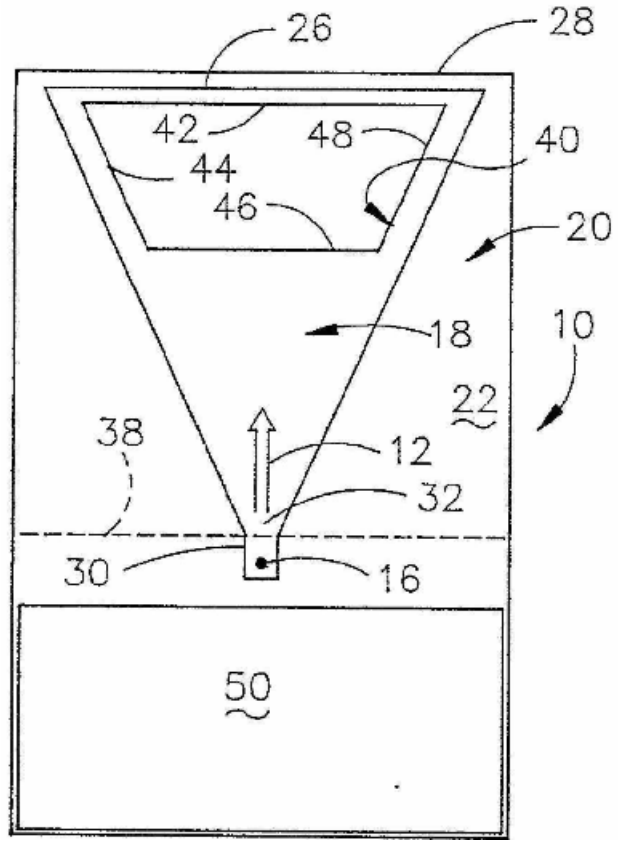

H01Q 5/371

Branching current paths

Definition statement

This place covers:

Antennas, where the different current paths are also branching, for example:

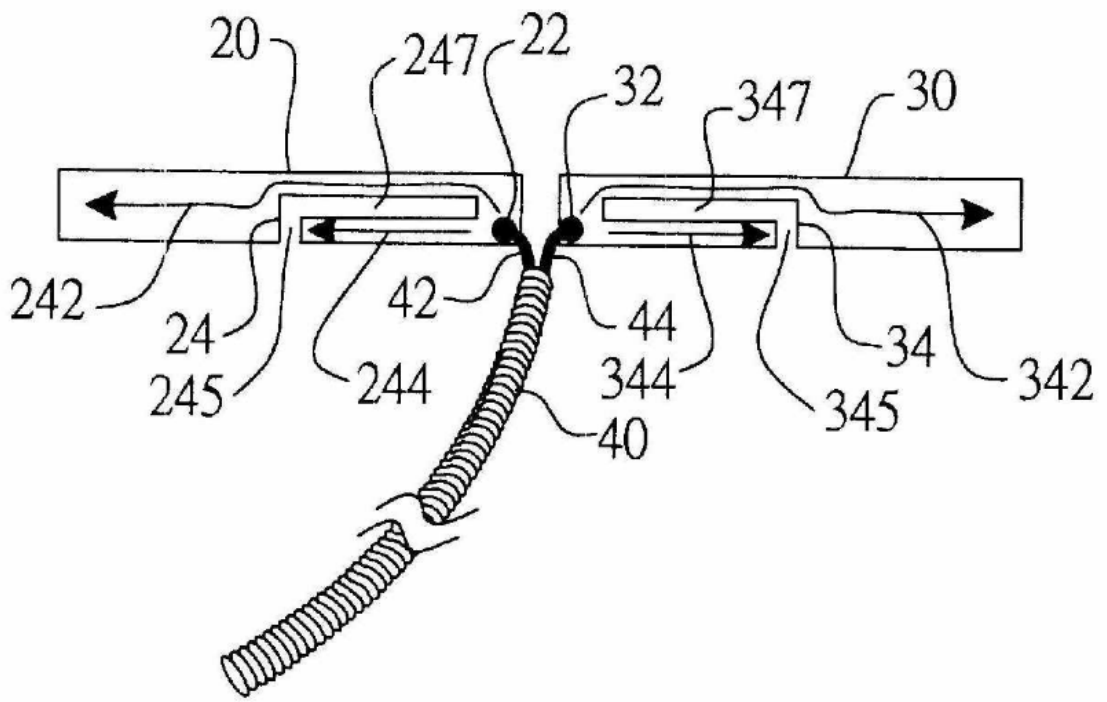

H01Q 5/378

Combination of fed elements with parasitic elements

Definition statement

This place covers:

The arrangement of a fed antenna with a parasitic element in order to create different wavebands.

References

Informative references

Attention is drawn to the following places, which may be of interest for search:

Parasitic elements for shaping the beam	H01Q 19/00

H01Q 5/40

Imbricated or interleaved structures; Combined or electromagnetically coupled arrangements, e.g. comprising two or more non-connected fed radiating elements

Definition statement

This place covers:

Antenna arrangement of fed radiating elements, where there is a structural and/or electromagnetic relationship between the elements.

Antenna arrangement where two different types of antennas (dipole and monopole, slot and patch, etc.) are partly overlapping.

Illustrative examples of subject-matter classified in this group:

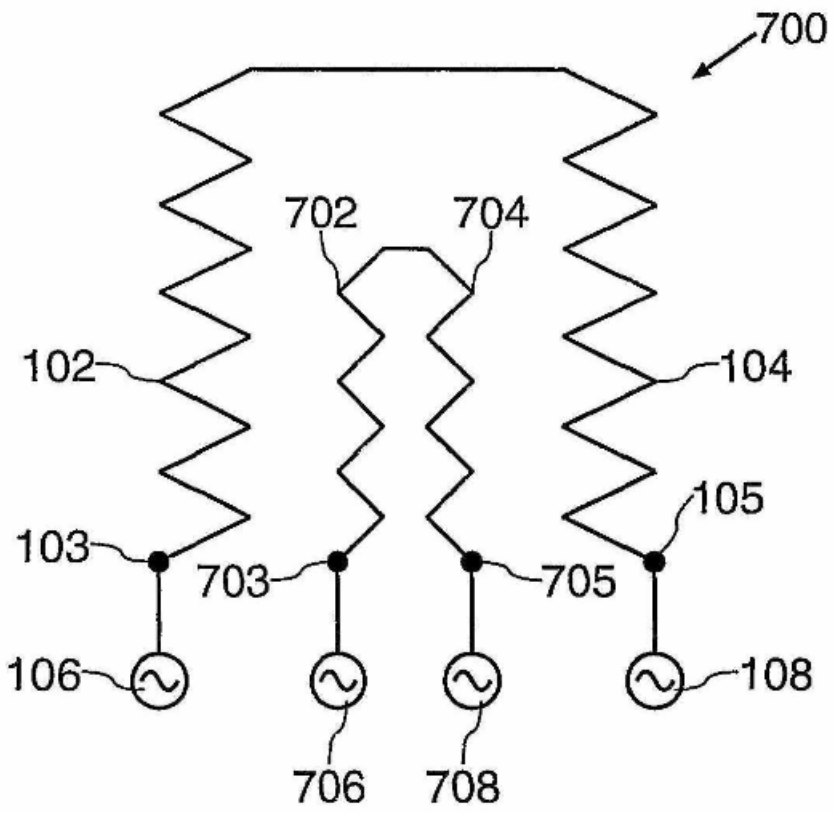

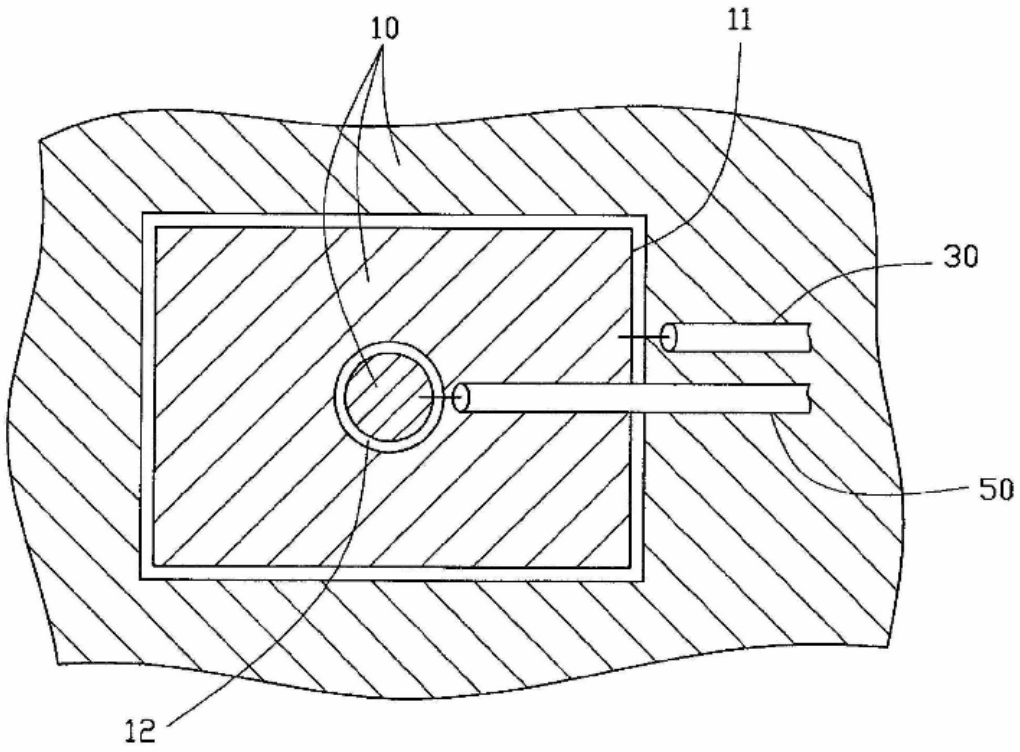

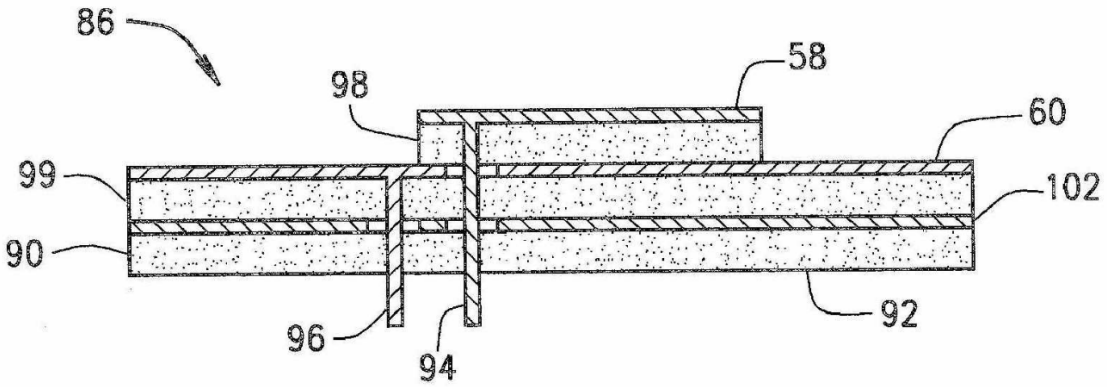

References

Informative references

Attention is drawn to the following places, which may be of interest for search:

Separate independent antennas.	H01Q 21/28
Antennas with common feed.	H01Q 21/30

H01Q 5/42

using two or more imbricated arrays (H01Q 5/49 takes precedence)

References

Limiting references

This place does not cover:

Parasitic elements used for purposes other than for dual-band or multi-band, e.g. imbricated Yagi aerials	H01Q 5/49

H01Q 5/45

using two or more feeds in association with a common reflecting, diffracting or refracting device

Definition statement

This place covers:

- reflecting device, e.g. parabolic reflector;
- diffracting device e.g. grids;
- refracting device e.g. lens.

H01Q 5/47

with a coaxial arrangement of the feeds

Definition statement

This place covers:

For example double coaxial horn; horn in horn; nested horn. Typically, the feeds have the same phase centre.

H01Q 5/49

with parasitic elements used for purposes other than for dual-band or multi-band, e.g. imbricated Yagi aerials

Definition statement

This place covers:

For example vertical or horizontal stacked Yagi-Uda antennas

H01Q 5/50

Feeding or matching arrangements for broad-band or multi-band operation

Definition statement

This place covers:

Antennas having special feeding/matching arrangements at or before the feeding for directing the signal from the antenna on at least two paths, for example diplexer circuitry.

Illustrative example of subject-matter classified in this group:

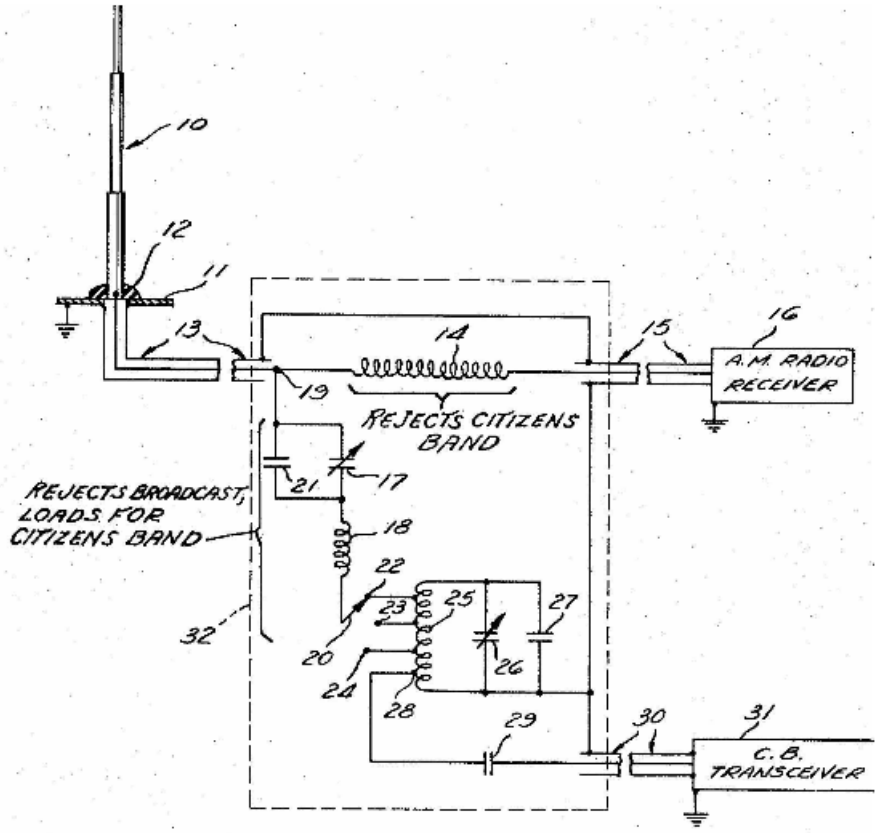

H01Q 7/00

Loop aerials with a substantially uniform current distribution around the loop and having a directional radiation pattern in a plane perpendicular to the plane of the loop

Definition statement

This place covers:

An antenna whose configuration is that of a loop, bent into the shape of closed curve.

Two types:

- Small loops

Circumference of the loop is small compared to lambda with constant current distribution (same value at any point) - magnetic antenna (more H-field) - max. sensitivity in the plane; nulls are perpendicular to the plane of the loop - circular (ring) with a number of windings as a solenoidal coil on a frame: multiturn loop; Alford loop antenna (see H01Q 7/08).

- Large loops (resonant loops)

The loop circumference is comparable to lambda with sinusoidal current distribution (half- or one wavelength loop); -more E-field (resonant loops; dual to dipole antenna) - max. sensitivity perpendicular to the plane - circular (ring); square (Quad, that is four sides lambdal4); delta, diamond shapes.

H01Q 7/005

{with variable reactance for tuning the antenna (tuning resonant circuits H03J)}

Definition statement

This place covers:

Illustrative example of subject-matter classified in this group:

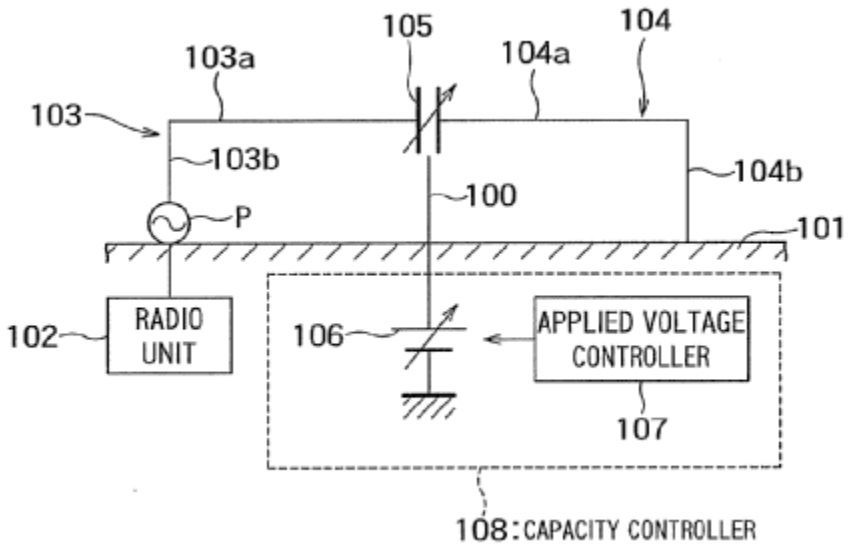

H01Q 7/02

Collapsible aerials; Retractable aerials

Definition statement

This place covers:

There are mechanical measures foreseen to collapse the aerial.

Illustrative example of subject-matter classified in this group:

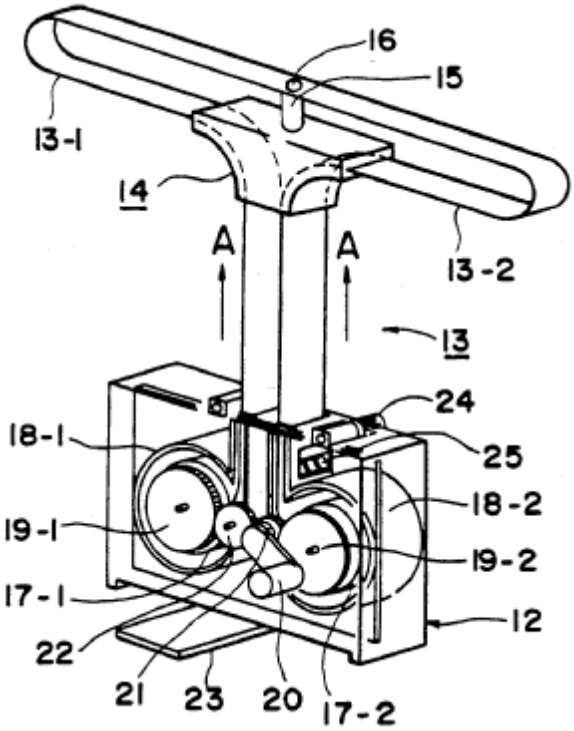

H01Q 7/04

Screened aerials (H01Q 7/02, H01Q 7/06 take precedence)

Definition statement

This place covers:

For improving the directivity the loop antenna is drawn into a metal tube with a gap. The gap constitutes a potential source which generates a current at the exterior side of the tube. The current generates a magnetic field around the external side of the tube (screened by the metal tubes).

Illustrative example of subject-matter classified in this group:

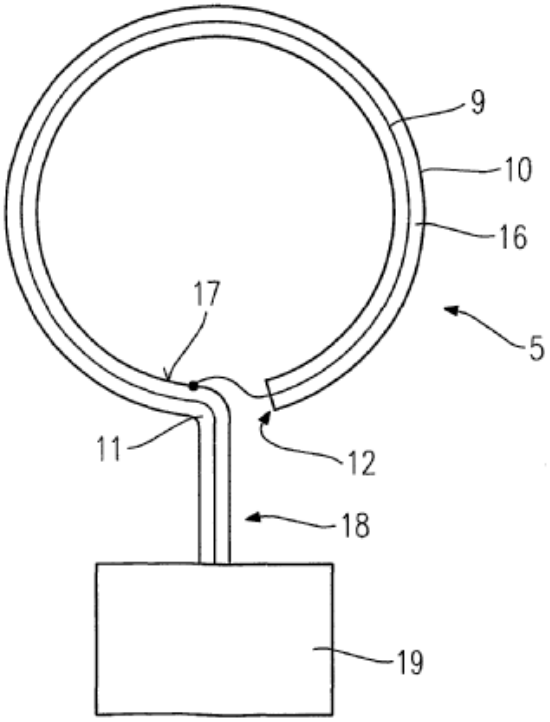

Application for article surveillance (G08B 13/2402, G08B 13/2402).

References

Limiting references

This place does not cover:

Collapsible aerials; Retractable aerials	H01Q 7/02
Loop aerials with a substantially uniform current distribution around the loop and having a directional radiation pattern in a plane perpendicular to the plane of the loop with core of ferromagnetic material	H01Q 7/06

Synonyms and Keywords

In patent document the following words are often used:

Shielded, electrostatic shielding.

H01Q 7/06

with core of ferromagnetic material (H01Q 7/02 takes precedence)

Definition statement

This place covers:

The voltage at the terminals of a small loop antenna can be increased by filling the loop with a core of permeable material. The effect of the core is to increase the magnetic flux through the area of the loop.

Choice of materials with different permeability.

Illustrative example of subject-matter classified in this group:

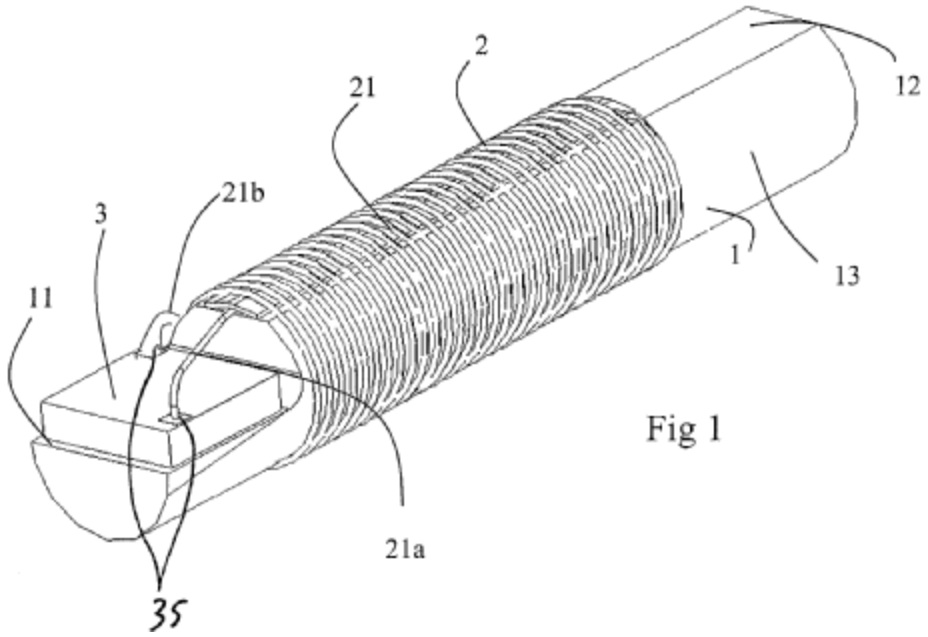

Fig 1

References

Limiting references

This place does not cover:

Collapsible aerials; Retractable aerials	H01Q 7/02

H01Q 7/08

Ferrite rod or like elongated core

Definition statement

This place covers:

A loop receiving antenna with a ferrite rod core used for increasing its radiation efficiency.

Illustrative example of subject-matter classified in this group:

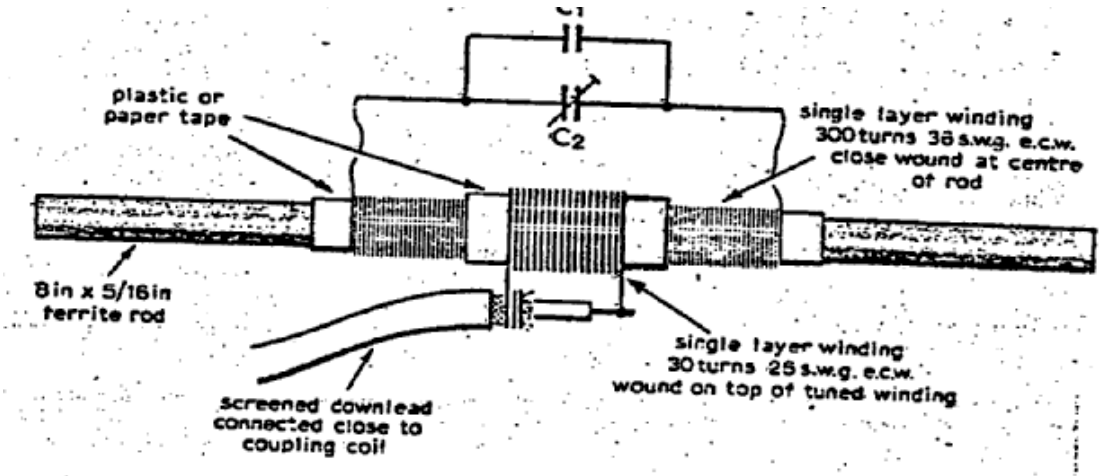

Fig. 16. Ferrite-rod aerial constructional details.

Glossary of terms

In this place, the following terms or expressions are used with the meaning indicated:

Ferrite	high permeability and high resistance; are high permeable isolators; e.g. mangan- or nickel ferrite

H01Q 9/00

Electrically-short aerials having dimensions not more than twice the operating wavelength and consisting of conductive active radiating elements (loop aerials H01Q 7/00; waveguide horns or mouths H01Q 13/00; slot aerials H01Q 13/00; combinations of active elements with secondary devices to give desired directional characteristic H01Q 19/00; combinations of two or more active elements H01Q 21/00)

Definition statement

This place covers:

An integral number of lambda/2 -standing waves of current or voltage; self-resonant e.g. lambda/2-dipole; lambda/4 monopole; lambda/2 X lambda/2 -square patch. Also electrically small antennas whose dimensions are such that it can be contained within a sphere whose diameter is small compared to a wavelength at the frequency of operation.

H01Q 9/005

{for radiating non-sinusoidal waves}

Definition statement

This place covers:

Originally intended for pulsed operation; now slowly moving to UWB type of operation.

Illustrative example of subject-matter classified in this group:

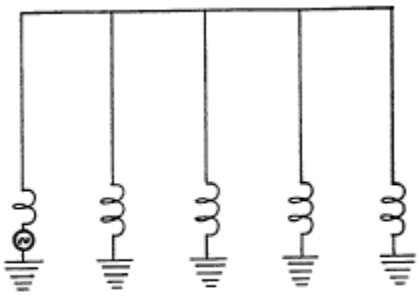

Figure 1. A multituned antenna.

H01Q 9/02

Non-resonant aerials

Definition statement

This place covers:

Used for pulsed signals; transient signals; reduction of ringing effect after extremely short pulses.

Illustrative example of subject-matter classified in this group:

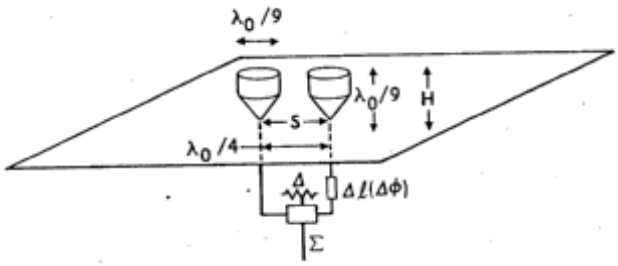

H01Q 9/04

Resonant aerials

Special rules of classification

Inactive.

H01Q 9/0407

{Substantially flat resonant element parallel to ground plane, e.g. patch antenna (dipole H01Q 9/285; monopole H01Q 9/40)}

Definition statement

This place covers:

Microstrip device with two parallel conducting layers, a ground plane and and a resonant plate, separated by a thin dielectric substrate and a feeder coupled to the resonant plate.

Rectangular patch; cavity- backed patch; inverted patch i.e. dielectric on top.

Illustrative example of subject-matter classified in this group:

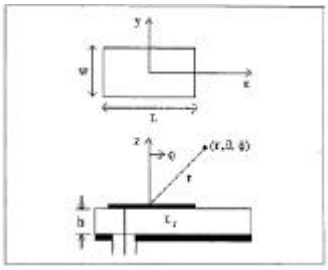

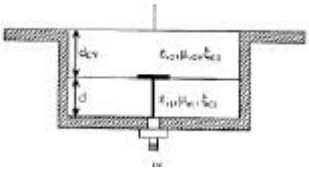

See: XP000965987, XP001175135, XP00680870, XP00026.

Relationships with other classification places

H01Q 9/065 Microstrip dipole antennas (a resonator made of a narrow conductor strip ecxited in the middle).

H01P microstrip transmission lines.

Special rules of classification

JPO classifies in H01Q 13/08 ("Radiating ends of two-conductor microwave transmission lines e.g. of coaxial lines, of microstrip lines") resp. in H01Q 13/18 for cavity backed patches.

Reasons; accord. Transmission line model, that is half-wave open-ended transmission line resonator or cavity model with edges as radiating slots.

Content:

Documents that address generally to parameters that determine the characteristics of the patch antenna like frequency (only bandwidth), radiation pattern like beamwidth by modifying shape, dielectric material, size of ground plane , overlays/ superstrates, thickness, feed position.

Shapes:

Square, rectangular, circular(disc), triangular, elliptical, bow-tie , fractal shaped (Sierpinski); H- or E-shaped , with slits or slots, but annular ring patch (H01Q 9/0464); non-planar, stepped or wedge-shaped (H01Q 9/0471).

Material:

Dielectric constants, ceramics, ferrite, air, multilayer, photonic bandgap or electromagnetic bandgap (PBG or EBG) materials.

Feed:

Standard probe/coaxial or stripline fed but particular feeding means in H01Q 9/045; electromagnetically coupled in H01Q 9/0457.

Synonyms and Keywords

In patent documents, the following words/expressions are often used as synonyms:

- "patch", "microstrip patch", "micro strip patch", "microstrip antenna", "microstrip disc", "microstrip", "resonator", "MSA" , "planar antenna" and "patch microstrip"

H01Q 9/0414

{in a stacked or folded configuration}

Definition statement

This place covers:

Stacked: Two or more electromagnetically coupled patches are placed on top of one another to increase bandwidth or operating on different frequencies.

Illustrative examples of subject-matter classified in this group:

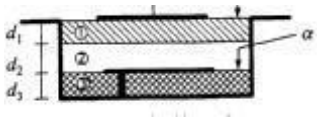

See: XP00686400,XP000457518

Folded: Folding the patch to reduce its surface cross section resp. to increase its physical length

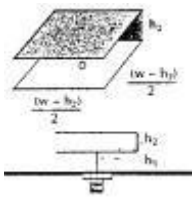

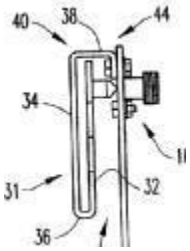

See: XP1192752, XP6010688, US2003107518, US2002175865

If stacking leads to separate dual- or multiple resonances then also H01Q 5/20 or H01Q 5/40.

If planar parasitic elements are placed also as side elements then H01Q 19/005 too.

Special rules of classification

All documents where stacked patches are used.

Synonyms and Keywords

In patent documents, the following words/expressions are often used as synonyms:

- "stacked patch radiators", "driven and parasitic patch", "upper or top and lower or bottom patch" and "multilayered with upper and lower patches folded"

H01Q 9/0421

{with a shorting wall or a shorting pin at one end of the element (H01Q 9/0414 takes precedence)}

Definition statement

This place covers:

An inverted F antenna is essentially a shorted quarter wavelength long patch. Shorting pins/posts or vertical wall inserted where the surface currents are at a minimum maintain the antenna resonance at the same frequency as a full-size patch, thus size reduction, small size.

Planar inverted L-antenna (PILA) Planar inverted F-antenna (PIFA).

Illustrative example of subject-matter classified in this group:

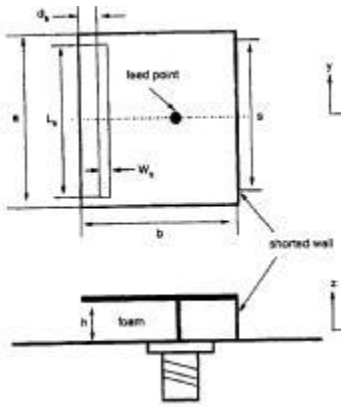

See: XP1112734, XP963857.

Relationships with other classification places

Inverted- L and inverted -F-antennas as wire (not-planar) are in H01Q 9/42 (monopole with folded element).

References

Limiting references

This place does not cover:

In a stacked or folded configuration	H01Q 9/0414

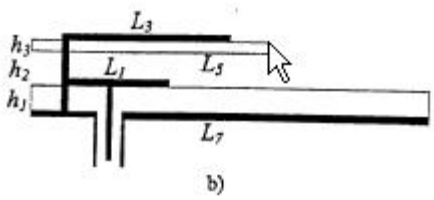

PIFA with stacked patches

Glossary of terms

In this place, the following terms or expressions are used with the meaning indicated:

PILA	Planar Inverted-L Antenna

PIFA	Planar Inverted-F Antenna

Synonyms and Keywords

In patent documents, the following words/expressions are often used as synonyms:

- "hort-circuited" and "planar inverted"

H01Q 9/0428

{radiating a circular polarised wave}

Definition statement

This place covers:

Single-fed circularly polarised (CP) patch antenna: two orthogonal modes are generated by perturbations or modifications to the standard patch geometry; that leads to circular polarisation radiation in the far field; without external network.

Illustrative example of subject-matter classified in this group:

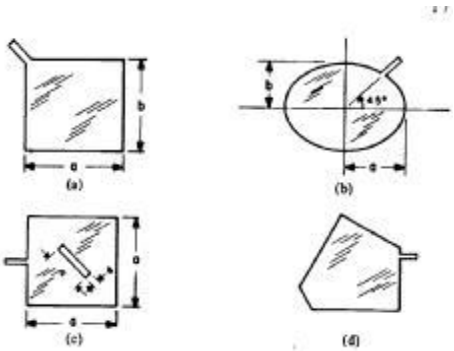

- diagonal-fed nearly square; corner-fed;
- truncated-corners;
- square with diagonal slot, slit or cutout;
- pentagon or triangular patch;
- with stubs extending from the edges or notches inserted at the edge; with loading.

See: XP740145

Circular polarised patch antennas using a single feed, single- or singly-fed.

Glossary of terms

In this place, the following terms or expressions are used with the meaning indicated:

CP	circular polarised
RHCP	right hand circular polarized
LHCP	left hand
SFCP	singly-fed or one-point feed ,or singly fed

Synonyms and Keywords

In patent documents, the following words/expressions are often used as synonyms:

- "RHCP", "right hand circular polarised" and "left hand polarised"

H01Q 9/0435

{using two feed points}

Definition statement

This place covers:

Circular polarised patch with dual feed at two orthogonal points with equal amplitude and 90° phase difference.

Illustrative example of subject-matter classified in this group:

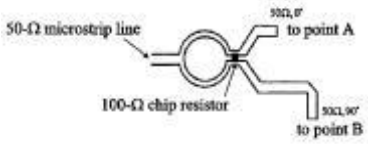

Input signal is split with 90° degree hybrid or Wilkinson power divider in two signals and coupled directly or capacitively coupled two feed points.

See: XP1058724, XP279307.

Special rules of classification

Keyword for dual polarisation, i.e. polarisation-dual (H01Q) (will/to be converted into Indexing Code / CPC symbol).

Glossary of terms

In this place, the following terms or expressions are used with the meaning indicated:

CP	fed circular polarised

H01Q 9/0442

{with particular tuning means}

Definition statement

This place covers:

Particular tuning means refers here to patch antennas where the resonance frequency or bandwidth may be adjusted/controlled by tuning elements/circuits like switch devices, diodes, varactors, reactive loading, stubs, strips, capacitors, permeability of ferrites, ferroelectric materials, etc.

Illustrative example of subject-matter classified in this group:

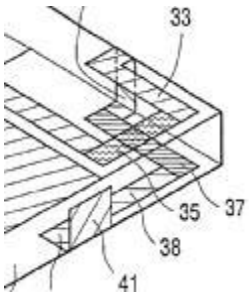

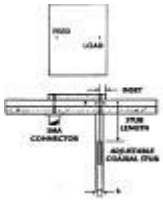

With tuning stub(28); with pin diodes(230,240); with stub line (41);reactive loaded.

See: US2002075190, XP680870.

Comprises patch antennas with controllable tuning elements.

Glossary of terms

In this place, the following terms or expressions are used with the meaning indicated:

Tunable reactive loading	controllable element which reactance (capacitance or inductance) can be changed

Synonyms and Keywords

In patent documents, the following words/expressions are often used as synonyms:

- " tuning / adjusting / controlling resonant frequency or bandwidth" and "variably frequency"

H01Q 9/045

{with particular feeding means (for circular polarisation H01Q 9/0428)}

Definition statement

This place covers:

All feedings means which are particular, not standard like coaxial probe-fed or direct coplanar transmission line fed (H01Q 9/0407).

Particular direct coupling:

transmission line with matching circuit and coax probe feed

Illustrative example of subject-matter classified in this group:

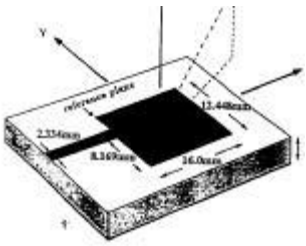

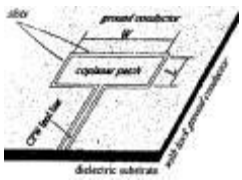

Inset-fed; edge- fed; coplanar waveguide fed (CPW).

See:XP336955, XP273716, XP1058725, US4724443

Special rules of classification

This group contains documents with particular direct coupling; electromagnetical coupling is in H01Q 9/0457.

Synonyms and Keywords

In patent documents, the following words/expressions are often used as synonyms:

- " conventional direct contacting feeding", "probe-fed, coaxial, direct probe fed, directly fed" and "coplanar transmission line fed; stripline edge fed, line fed"

H01Q 9/0457

{electromagnetically coupled to the feed line}

Definition statement

This place covers:

All patch antennas without direct connection of the feed line to the patch, i.e. with non-contacting feeding structures as electromagnetic coupling like:

- proximity, capacitive coupling or
- aperture (slot) coupling

Illustrative example of subject-matter classified in this group:

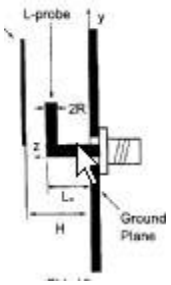

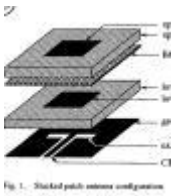

Proximity stripline coupled; L-probe proximity coupled; aperture coupled; CPW (Coplanar Waveguide) coupled.

See: XP1046273, XP895921, XP294631, XP1006617, XP230628, XP1158250.

Glossary of terms

In this place, the following terms or expressions are used with the meaning indicated:

EMC, EM coupled	electromagnetically coupled -capacitively coupled; proximity coupled, gap coupled, coplanar side coupled - aperture coupled via slot, also via crossed slot, slot-coupled with various shapes
CPW coupled	coplanar waveguide coupled

Synonyms and Keywords

In patent documents, the following words/expressions are often used as synonyms:

- "electromagnetic", "proximity" and "capacitive coupling"

H01Q 9/0464

{Annular ring patch}

Definition statement

This place covers:

All patch antennas whereby the patch radiator is in the form of an annular ring which shows small size and larger bandwidth as compared to conventional rectangular or circular patches.

Illustrative example of subject-matter classified in this group:

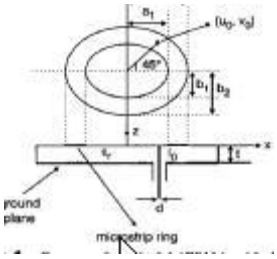

Annular ring proximity/electromagnetically coupled; direct coupled annular elliptical ring.

See: XP1201836, XP951884.

Relationships with other classification places

Microstrip-fed slot-ring in H01Q 13/106.

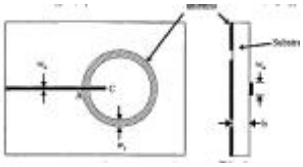

Synonyms and Keywords

In patent documents, the following words/expressions are often used as synonyms:

- "l microstrip ring", "Annular ring microstrip antenna (ARMSA)", "annular ring patch" and "ring-shaped, annular patch"

H01Q 9/0471

{Non-planar, stepped or wedge-shaped patch}

Definition statement

This place covers:

Special shaped patch antennas whereby the patch:

- is non-planar e.g. curved; spherical; three dimensional shape;
- stepped or
- wedge shaped i.e. mounted on wedge-shaped dielectric; slanted; sloping patch).

Illustrative example of subject-matter classified in this group:

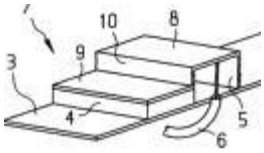

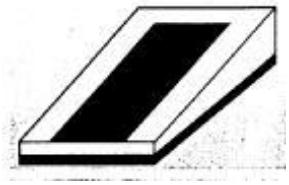

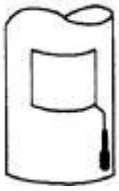

Non-planar; stepped; wedge shaped; cylindrical.

See: XP680870, EP1026774, US6879290, US2003210190, US200289455, EP806810.

Special rules of classification

Comprises also patches wraparound cylindrical surfaces; also patches with shaped ground planes.

Synonyms and Keywords

In patent documents, the following words/expressions are often used as synonyms:

- "l microstrip ring", "annular ring microstrip antenna (ARMSA)" , "staircase" and "slope"

H01Q 9/0478

{with means for suppressing spurious modes, e.g. cross polarisation}

Definition statement

This place covers:

Patches with means for reducing spurious modes which cause cross polarization i.e. the unwanted other polarization e.g. the orthogonal linear or circular polarization caused by a second mode resp. by orthogonal currents on the patch.

Illustrative example of subject-matter classified in this group:

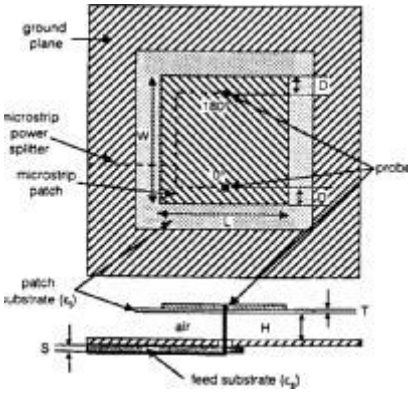

Patch with plurality of parallel conductive strips; with dual-probe fed (balanced feed) or two shorting pins.

H01Q 9/0485

{Dielectric resonator antennas}

Definition statement

This place covers:

Consists of a volume of a dielectric material disposed on or close to a grounded substrate, with energy transferred by way of monopole probes inserted into the dielectric or by way of aperture feeds provided in the ground substrate. In a dielectric resonator antenna (DRA) it is the dielectric material that radiates when excited by the feed.

The resonant characteristics depend upon the shape and size of the volume of dielectric, the material >>1, the shape , size and position of the feeds thereto and also on the shape, size and position of the ground plane.

Illustrative example of subject-matter classified in this group:

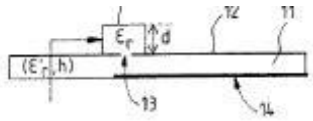

See: US6198450, WO2004017461.

Quite similar modifications as for patch antennas in respect to feeding (probe-fed or slot/ aperture fed), increasing of bandwidth and tuning of resonant frequency.

Special rules of classification

USPTO classifies in H01Q 1/38 (/IC).

A dielectric loaded antenna (DLA) is a patch antenna in which the conductive radiating element is encased in a dielectric material for modifying the resonance characteristics.

Glossary of terms

In this place, the following terms or expressions are used with the meaning indicated:

DRA	dielectric resonator antenna;
HDA	high dielectric antenna

H01Q 9/0492

{circularly polarised}

Definition statement

This place covers:

Using two feed points, or using coupled modes.

Illustrative example of subject-matter classified in this group:

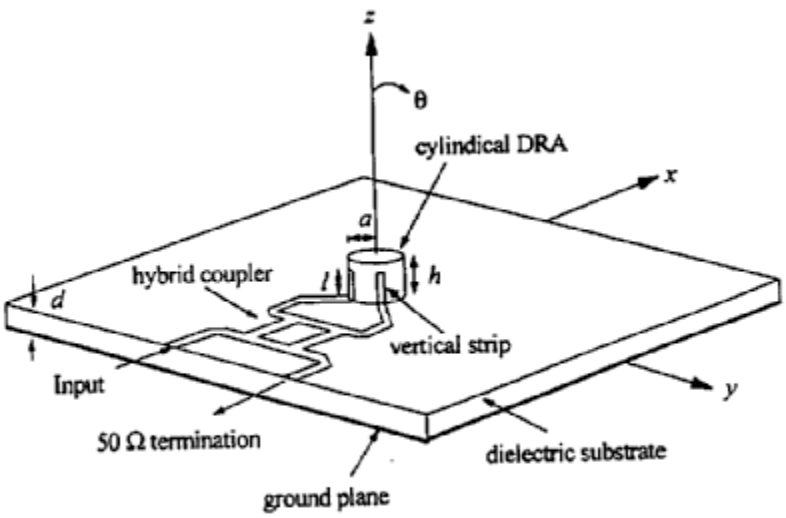

Fig. 1 Configuration of the dual-strip excited cylindrical DRA for circular polarization

H01Q 9/06

Details

Special rules of classification

Inactive.

H01Q 9/065

{Microstrip dipole antennas (patch antenna H01Q 9/0407)}

Definition statement

This place covers:

A microstrip antenna of rectangular shape with its width much smaller than its length. A resonator made with a narrow conductor strip, i.e. making L resonant and W very thin.

Illustrative example of subject-matter classified in this group:

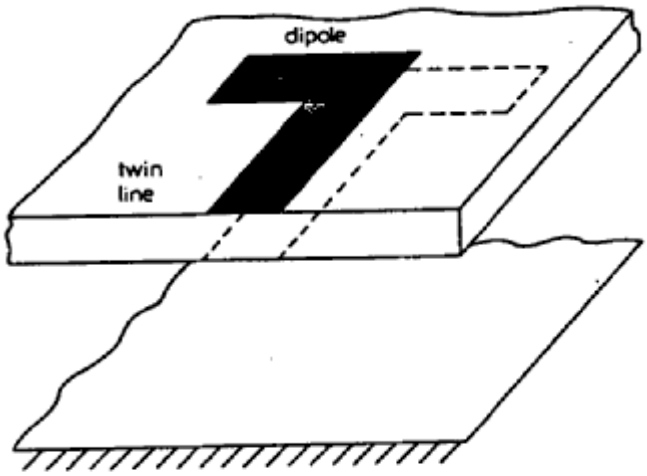

Fig. 1 *Double-sided printed dipole fed by a twin-line and backed by a metallic ground. The dark area represents the upper print and the dashed area is the lower print*

Synonyms and Keywords

In patent documents, the following words/expressions are often used as synonyms:

- "strip dipole", "printed dipole", "monopole strip" and "icrostrip antenna with dipole resonator"

H01Q 9/08

Junction boxes specially adapted for supporting adjacent ends of collinear rigid elements

Definition statement

This place covers:

Originally used for top-set TV antenna with adjustable angle between telescopic dipole arms.

Illustrative example of subject-matter classified in this group:

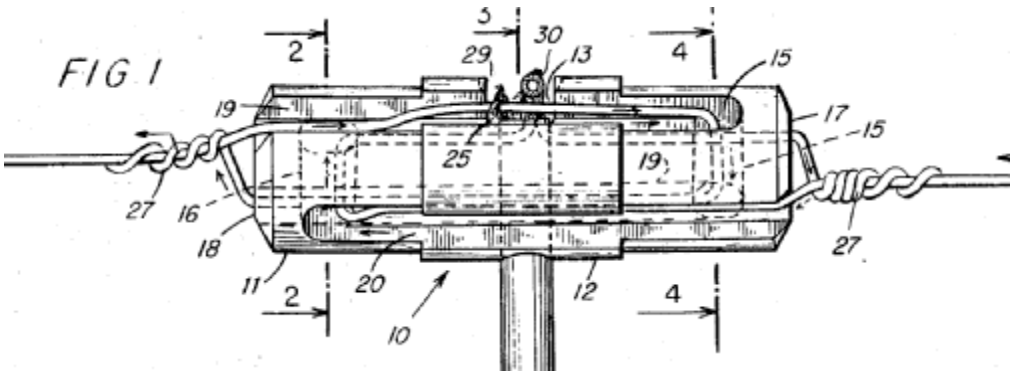

Special rules of classification

Inactive.

H01Q 9/10

Junction boxes specially adapted for supporting adjacent ends of divergent elements

Special rules of classification

Inactive.

H01Q 9/12

adapted for adjustment of angle between elements

Special rules of classification

Inactive.

H01Q 9/14

Length of element or elements adjustable (telescopic elements H01Q 1/10)

Special rules of classification

Inactive.

H01Q 9/145

{by varying the electrical length}

Special rules of classification

Inactive.

H01Q 9/16

with feed intermediate between the extremities of the aerial, e.g. centre-fed dipole (H01Q 9/44 takes precedence)

Definition statement

This place covers:

A dipole consist of two collinear and contiguous metallic rods or tubes with the feed between or of two conical conductors, typical hollow, or of strips or triangles printed on a thin dielectric substrate: maximum radiation everywhere at right angles, zero along the length.

Sleeve-dipole antenna: An antenna surrounded in its central portion by a coaxial conducting sleeve.

Illustrative example of subject-matter classified in this group:

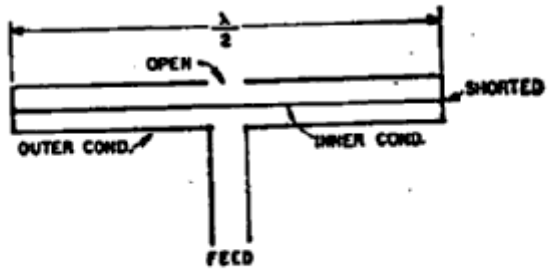

Fig. 1 — The original coax dipole system, using air-insulated coaxial line. Velocity factor is essentially the same both inside and outside the line in such case.

H01Q 9/18

Vertical disposition of the aerial

Definition statement

This place covers:

Typically used for pattern which is omnidirectional in azimuth.

Illustrative example of subject-matter classified in this group:

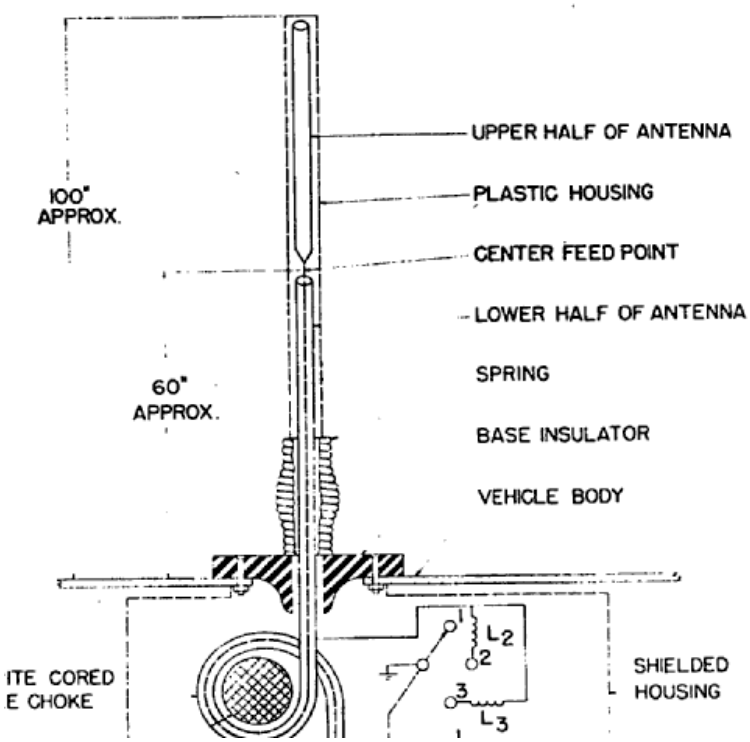

H01Q 9/20

Two collinear substantially straight active elements; Substantially straight single active elements (H01Q 9/28 takes precedence)

Definition statement

This place covers:

Collinear, taht is axis lying in a straight line.

Illustrative example of subject-matter classified in this group:

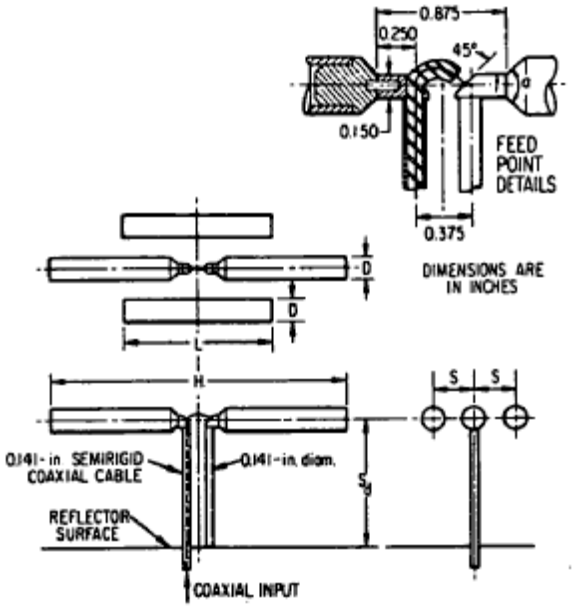

References

Limiting references

This place does not cover:

Conical, cylindrical, cage, strip, gauze, or like elements having an extended radiating surface; Elements comprising two conical surfaces having collinear axes and adjacent apices and fed by two-conductor transmission lines	H01Q 9/28

H01Q 9/22

Rigid rod or equivalent tubular element or elements

Definition statement

This place covers:

Cylindrical dipole: dipole with cylindrical arms.

Illustrative example of subject-matter classified in this group:

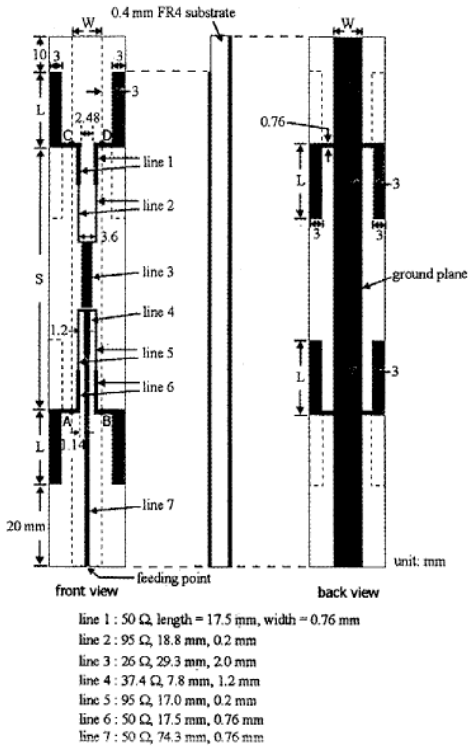

H01Q 9/24

Shunt feed arrangements to single active elements, e.g. for delta matching

Definition statement

This place covers:

This actually pertains to how the currents on the dipole are excited.

Illustrative example of subject-matter classified in this group:

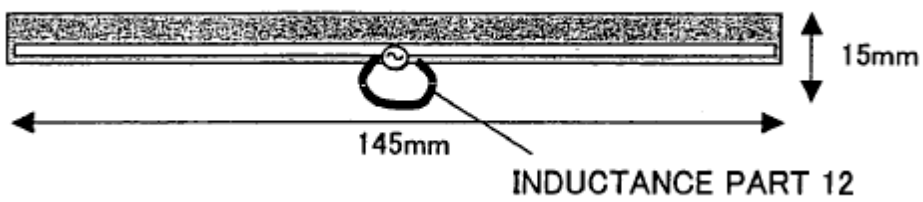

H01Q 9/26

with folded element or elements, the folded parts being spaced apart a small fraction of operating wavelength (resonant loop aerials H01Q 7/00)

Definition statement

This place covers:

An antenna composed of two or more parallel, closely-spaced dipole antennas connected together at their ends with one of the dipole antennas fed at its center and the others short-circuited at their centers.

Illustrative example of subject-matter classified in this group:

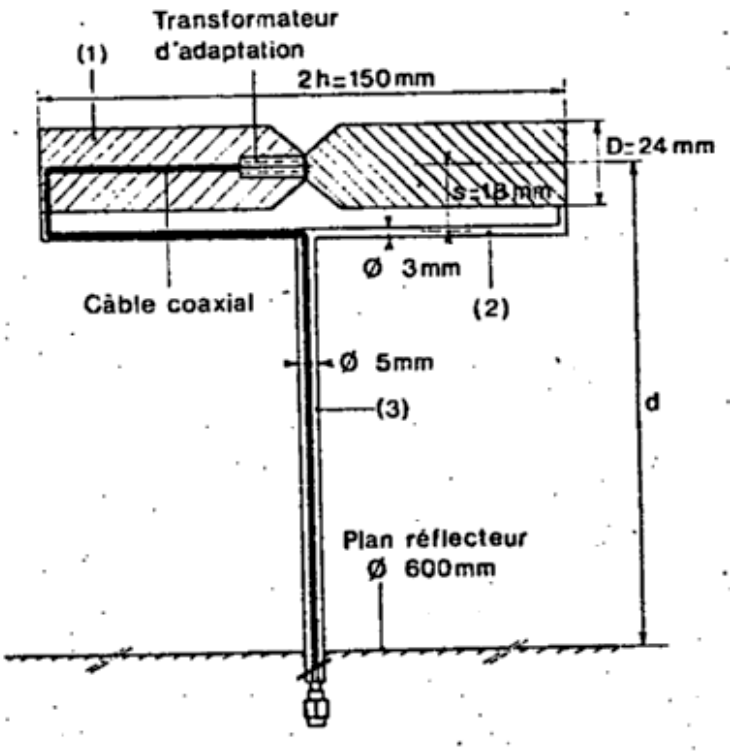

H01Q 9/265

{Open ring dipoles; Circular dipoles}

Definition statement

This place covers:

Only pertains to the shape of the dipole.

Illustrative example of subject-matter classified in this group:

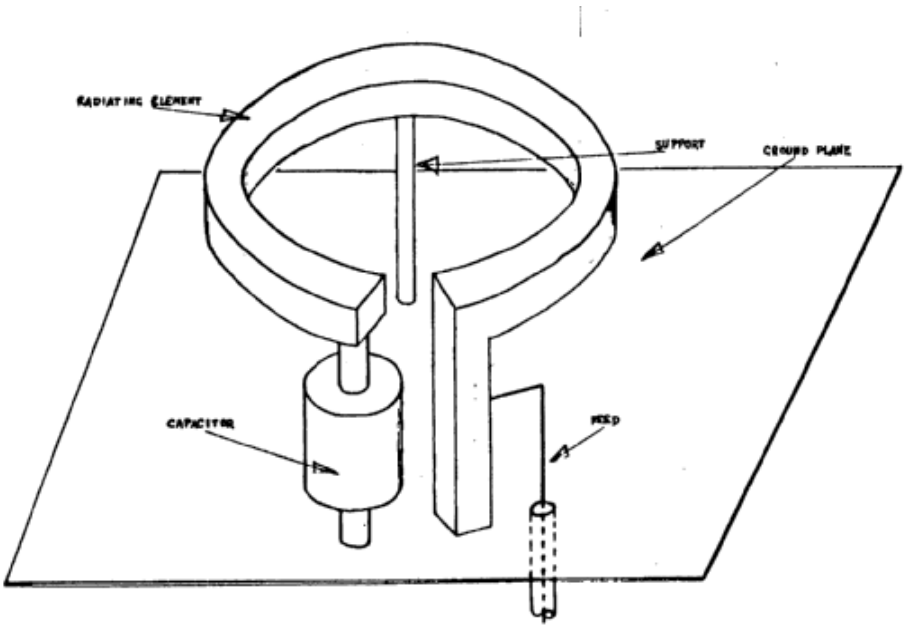

H01Q 9/27

Spiral aerials

Definition statement

This place covers:

An antenna consisting of one or more conducting wires or tapes arranged as a spiral.

Illustrative example of subject-matter classified in this group:

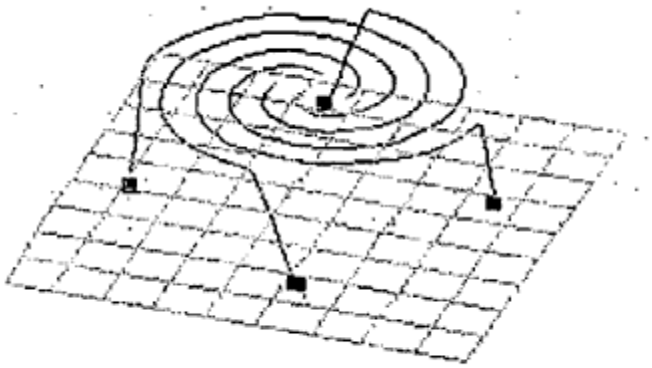

(a)

Special rules of classification

Spiral antennas are usually classified according to the shape of the surface to which they conform (for example. conical or planar spirals). and according to the mathematical form (for example. equiangular or archimedean).

H01Q 9/28

Conical, cylindrical, cage, strip, gauze, or like elements having an extended radiating surface; Elements comprising two conical surfaces having collinear axes and adjacent apices and fed by two-conductor transmission lines (biconical horns H01Q 13/04)

Definition statement

This place covers:

Basically any dipole geometry for which the dipole arms have a specific shape: bow-tie, bicone.

Illustrative example of subject-matter classified in this group:

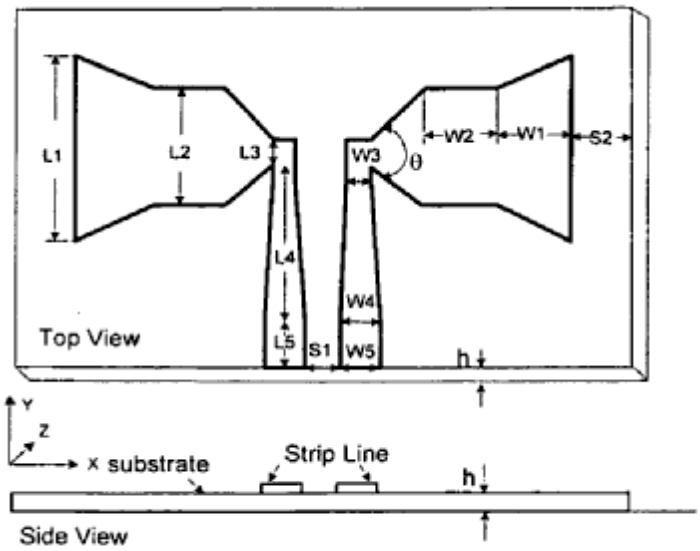

Fig. 1 Proposed bowtie antenna on the single-sided substrate.

H01Q 9/285

{Planar dipole (H01Q 9/065 takes precedence; patch antenna H01Q 9/0407)}

Definition statement

This place covers:

Dipole printed on a dielectric substrate; printed -, dielectric dipole.

Illustrative example of subject-matter classified in this group:

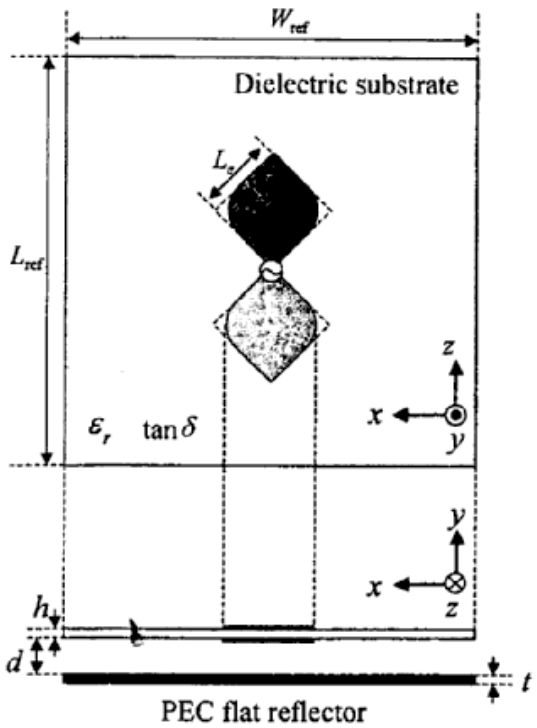

H01Q 9/30

with feed to end of elongated active element, e.g. unipole (H01Q 9/44 takes precedence)

Definition statement

This place covers:

An antenna, constructed above an imaging plane, that produces a radiation pattern approximating that of an electric dipole in the half-space above the imaging plane. The monopole requires a ground plane or counterpoise which may be the equipment enclosure. The monopole is a dipole with half of its length replaced by an “image created by an infinite (or very large) ground plane; also with base or centre loading.

Coaxial monopole antenna: An antenna comprised of an extension to the inner conductor of a coaxial line and a radiating sleeve that in effect is formed by folding back the outer conductor of the coaxial line; sleeve-monopole/sleeve stub antenna.

Illustrative example of subject-matter classified in this group:

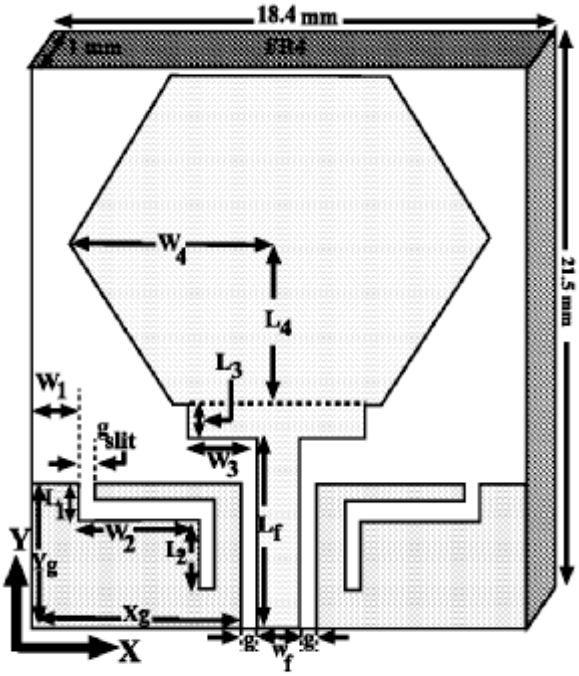

Fig. 1. Geometry of the proposed monopole antenna (unit: mm).

References

Limiting references

This place does not cover:

with feed to end of elongated active element, e.g. unipole	H01Q 9/44

H01Q 9/32

Vertical arrangement of element (H01Q 9/40 takes precedence)

Definition statement

This place covers:

Only pertains to the orientation.

Illustrative example of subject-matter classified in this group:

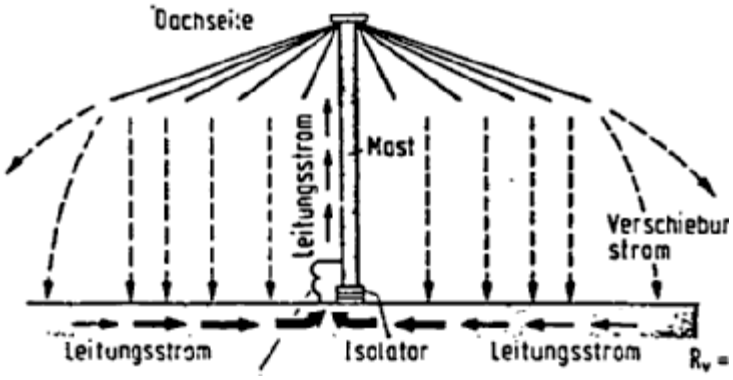

References

Limiting references

This place does not cover:

Vertical arrangement of element	H01Q 9/40

H01Q 9/34

Mast, tower, or like self-supporting or stay-supported aerials

Definition statement

This place covers:

Mechanical rigidity required.

Illustrative example of subject-matter classified in this group:

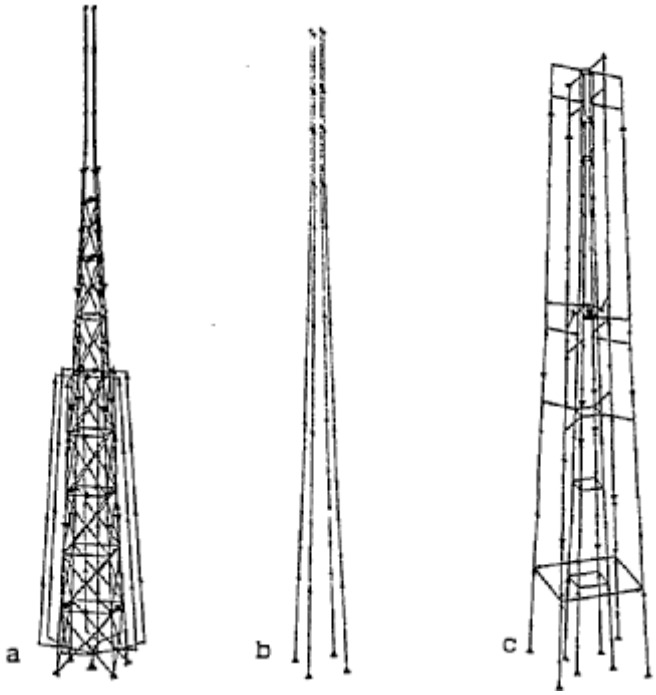

H01Q 9/36

with top loading

Definition statement

This place covers:

A vertical monopole with an additional metallic structure at the top intended to increase the effective height of the antenna and to change its input impedance.

Illustrative example of subject-matter classified in this group:

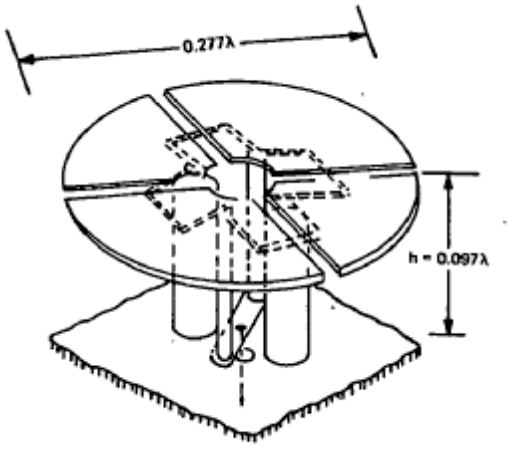

(a)

Synonyms and Keywords

In patent documents, the following words/expressions are often used as synonyms:

- "flat-top antenna", "end capacitor", "top-loaded vertical antenna" and "umbrella antenna"

H01Q 9/38

with counterpoise (with counterpoise comprising elongated elements coplanar with the active element H01Q 9/44)

Definition statement

This place covers:

As series-fed or shunt-fed vertical antenna whereby the antenna is insulated from ground and whose feed line connects between ground and the lower end of the antenna or the antenna is connected directly to ground and whose feed line connects between ground and a point suitably positioned above.

Illustrative example of subject-matter classified in this group:

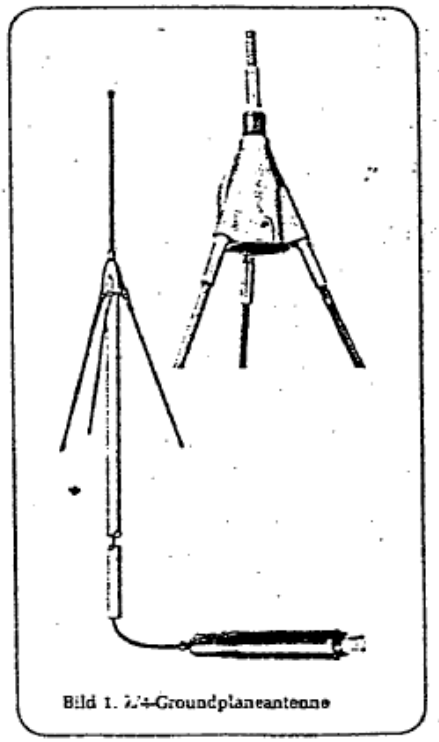

References

Limiting references

This place does not cover:

with counterpoise comprising elongated elements coplanar with the active element	H01Q 9/44

H01Q 9/40

Element having extended radiating surface

Definition statement

This place covers:

Basically any monopole geometry for which the radiator has a specific shape: conical, planar-triangular, etc.

Illustrative example of subject-matter classified in this group:

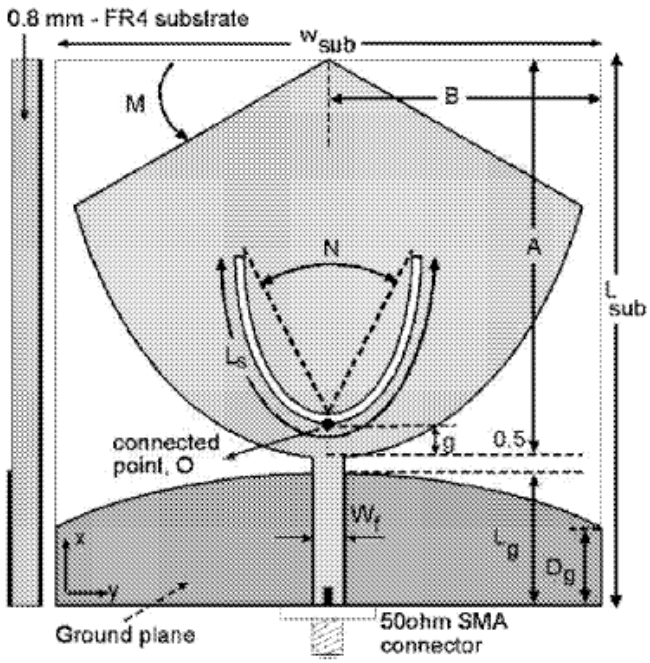

Fig. 1. Geometry of the proposed monopole antenna (unit: mm).

H01Q 9/42

with folded element, the folded parts being spaced apart a small fraction of the operating wavelength

Definition statement

This place covers:

A monopole antenna formed from half of a folded dipole with the unfed element(s) directly connected to the imaging plane.

Inverted- L antenna: a short monopole as vertical element and a wire horizontal element (quarter wavelength) attached at the end of the monopole.

Inverted -F antenna: a small I-L element is attached at the end of the vertical element of the ILA.

Illustrative example of subject-matter classified in this group:

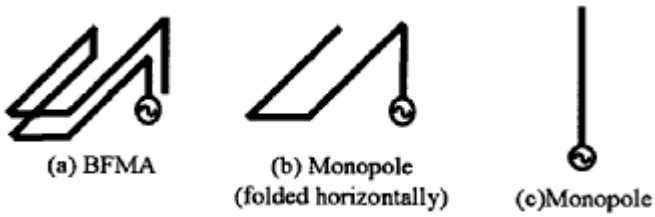

(a) Antenna configuration.

H01Q 9/43

Scimitar aerials

Definition statement

This place covers:

Turkish sabre shape.

Illustrative example of subject-matter classified in this group:

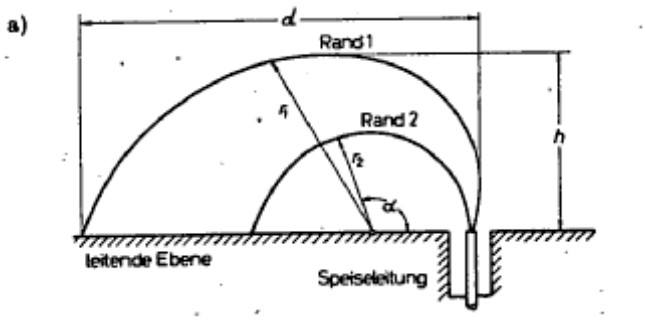

H01Q 9/44

with plurality of divergent straight elements, e.g. V-dipole, X-aerial; with plurality of elements having mutually inclined subtantially straight portions (turnstile aerials H01Q 21/26)

Definition statement

This place covers:

Illustrative example of subject-matter classified in this group:

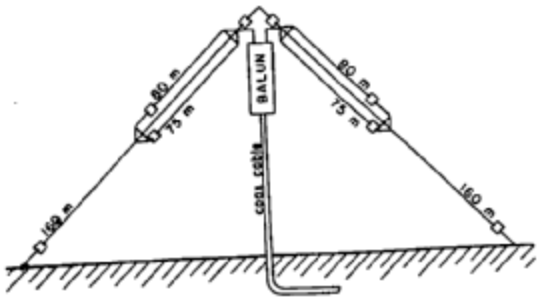

Fig. 1 – The initial two-band system described in the text.

Remark:

If the straight elements have different length, see also H01Q 21/30, since multiband operation is obtained in this way when fed at the same point (see reference below).

References

Limiting references

This place does not cover:

with plurality of elements having mutually inclined substantially straight portions	H01Q 21/26

Informative references

Attention is drawn to the following places, which may be of interest for search:

Combination of separate aeral units operating in different wavebandsand connected to a common feeder system	H01Q 21/30

H01Q 9/46

with rigid elements diverging from single point

Definition statement

This place covers:

Illustrative example of subject-matter classified in this group:

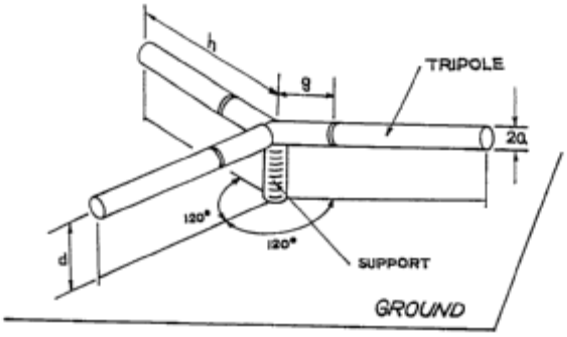

Figure 1 A Tripole Antenna Over a Large Ground Plane.

See also H01Q 21/30 if the elements are joined to the same feed point.

H01Q 11/00

Electrically-long aerials having dimensions more than twice the shortest operating wavelength and consisting of conductive active radiating elements (leaky waveguides aerials, slot aerials H01Q 13/00; combinations of active elements with secondary devices to give desired directional characteristic H01Q 19/00; aerial arrays or systems H01Q 21/00)

Definition statement

This place covers:

An antenna consisting of one or more wires whose length is large in respect to the wavelength (long-wire antennas). Two types:

- non-resonant (non-periodic; terminated) and
- resonant antennas with standing waves.

Long-wire antenna: A wire antenna that, by virtue of its considerable length in comparison with the operating wavelength, provides a directional pattern.

References

Limiting references

This place does not cover:

Leaky waveguides aerials, slot aerials	H01Q 13/00
Combinations of active elements with secondary devices to give desired directional characteristic	H01Q 19/00
Aerial arrays or systems	H01Q 21/00

H01Q 11/02

Non-resonant aerials, e.g. travelling-wave aerial

Definition statement

This place covers:

Travelling-wave antennas means antennas whose excitation has a quasiuniform progressive phase, as the result of a single feeding wave traversing its length in one direction only. Terminated in a resistance.

Illustrative example of subject-matter classified in this group:

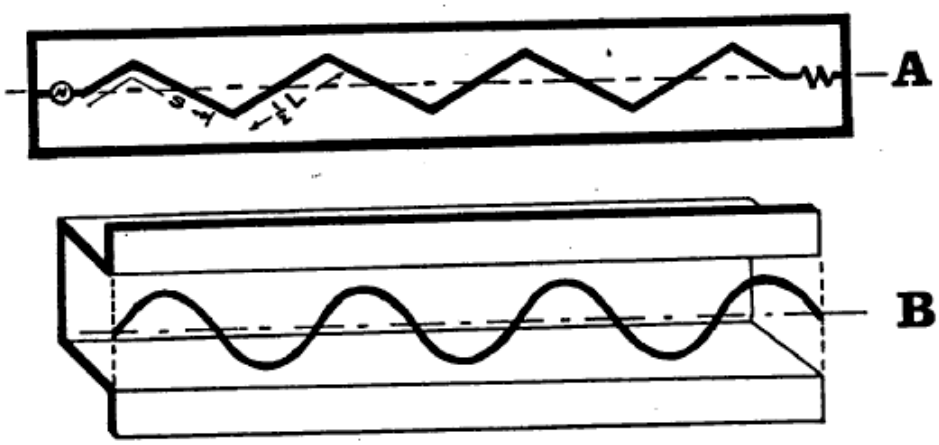

H01Q 11/04

with parts bent, folded, shaped, screened, or electrically loaded to obtain desired phase relation of radiation from selected sections of the aerial (rhombic aerials, V-aerials H01Q 11/06)

Definition statement

This place covers:

As fishbone antenna: an end-fire, travelling wave antenna.

Illustrative example of subject-matter classified in this group:

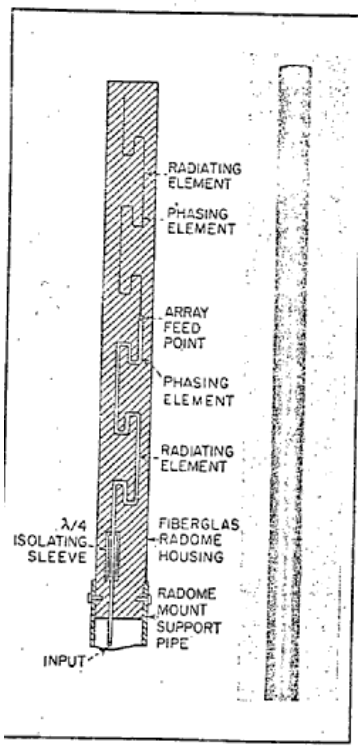

References

Limiting references

This place does not cover:

rhombic aerials, V-aerials	H01Q 11/06

H01Q 11/06

Rhombic aerials; V-aerials

Definition statement

This place covers:

Rhombic antenna: composed of long wire radiators arranged in such a manner that they form the sides of a rhombus.

V-antenna: A V-shaped arrangement of two conductors, balanced fed at the apex, with induced angle, length and apex height above the earth chosen so as to give the desired directive properties to the radiation pattern.

Illustrative example of subject-matter classified in this group:

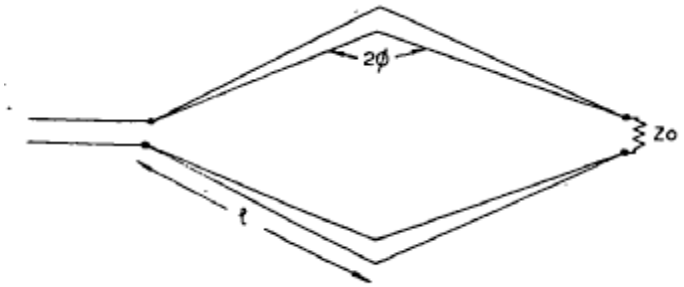

Fig. 1 *Simple rhombic aerial*

H01Q 11/08

Helical aerials

Definition statement

This place covers:

An antenna consisting of a single conductor or multiple conductors wound into a helical shape, whereby the helix circumference is of the order of one wavelength; radiating in axial mode i.e. along the helix axis.

- monofilar, unifilar or
- bifilar, quadrifilar , octofilar or multifilar also in backfire configuration

Illustrative example of subject-matter classified in this group:

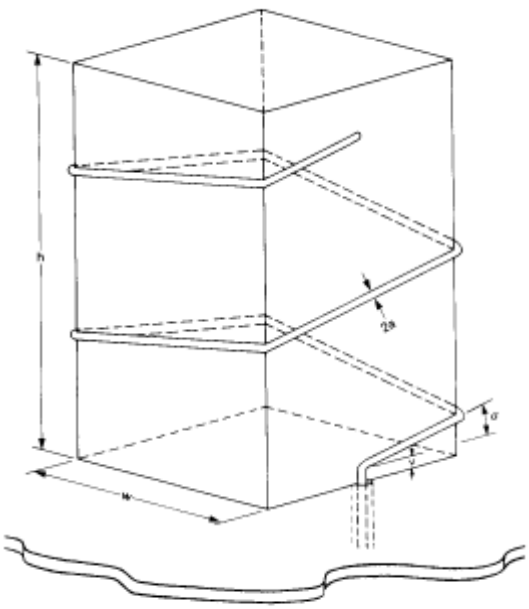

Fig. 1. Two-turn square helical antenna with a dielectric core and fed over a ground plane.

H01Q 11/083

{Tapered helical aerials, e.g. conical spiral aerials}

Definition statement

This place covers:

Windings are on a (part of a) cone; tapered geometries.

Illustrative example of subject-matter classified in this group:

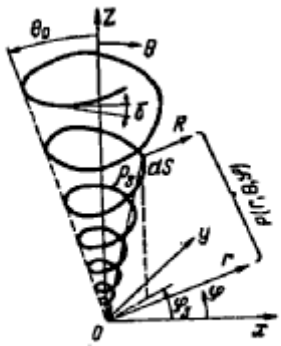

Fig. 1

H01Q 11/086

{collapsible}

Definition statement

This place covers:

Illustrative example of subject-matter classified in this group:

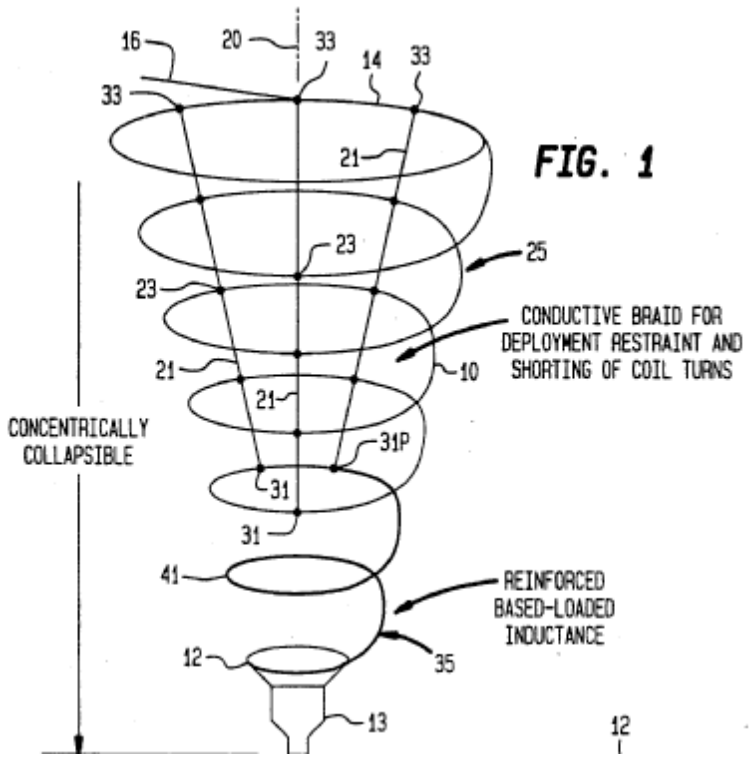

H01Q 11/10

Log-periodic aerials {periodic aerials, e.g. length or spacing of elements according to a given law} (H01Q 11/08 takes precedence)

Definition statement

This place covers:

A class of antennas having the structural geometry such that its impedance and radiation characteristics repeat periodically as the logarithm of the frequency.

Illustrative example of subject-matter classified in this group:

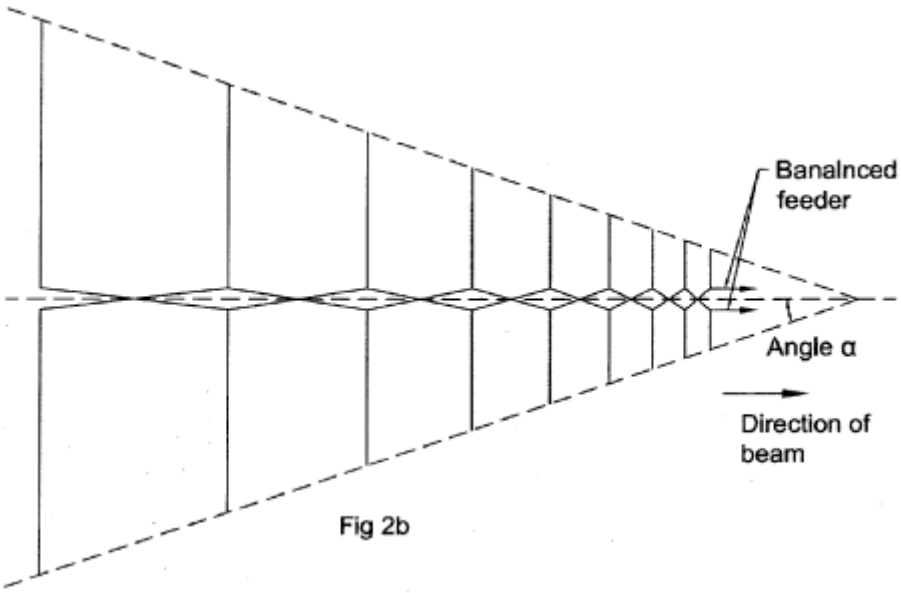

Fig 2b

References

Limiting references

This place does not cover:

periodic aerials, e.g. length or spacing of elements according to a given law	H01Q 11/08

H01Q 11/105

{using a dielectric support}

Definition statement

This place covers:

Illustrative example of subject-matter classified in this group:

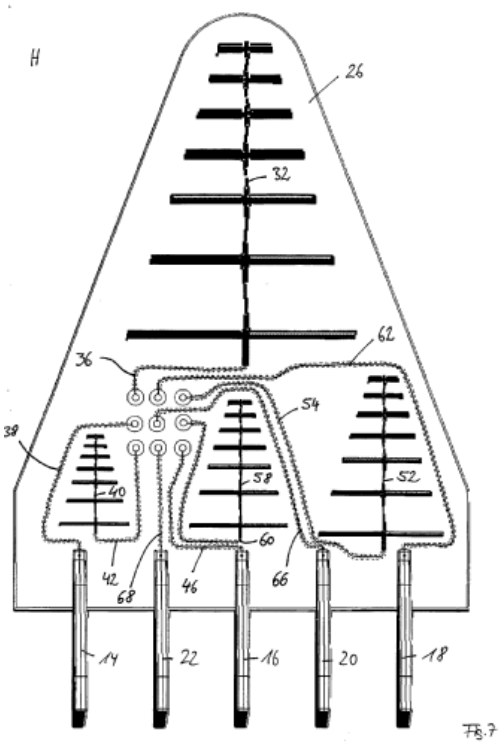

H01Q 11/12

Resonant aerials

Definition statement

This place covers:

When the long-wire antenna is open at its end standing waves can be formed when the length is a multiple of the wavelength.

Illustrative example of subject-matter classified in this group:

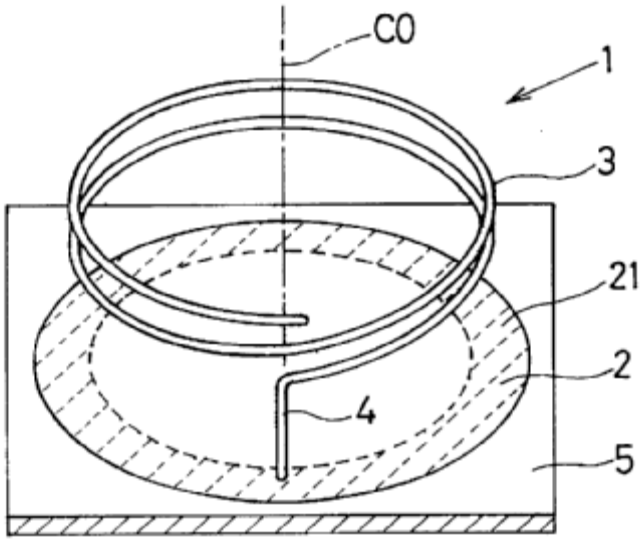

H01Q 11/14

with parts bent, folded, shaped, or screened, or with phasing impedances, to obtain desired phase relation of radiation from selected sections of the aerial or to obtain desired polarisation effects

Definition statement

This place covers:

Illustrative example of subject-matter classified in this group:

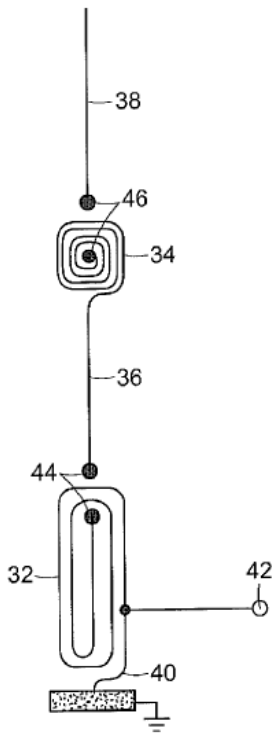

H01Q 11/16

in which the selected sections are collinear

Definition statement

This place covers:

Illustrative example of subject-matter classified in this group:

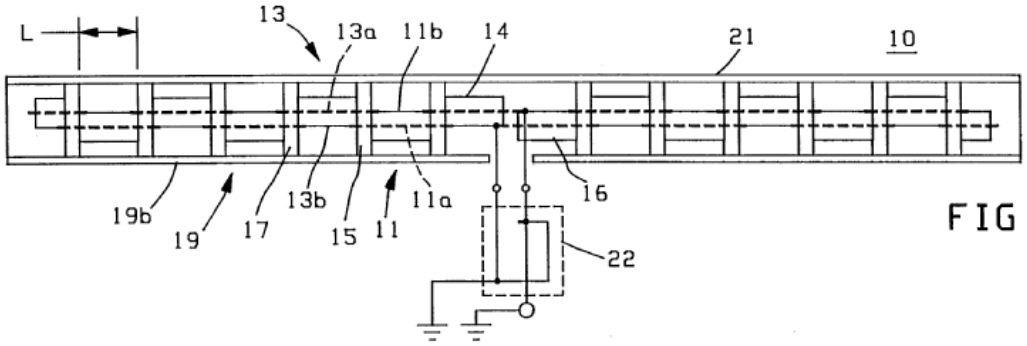

FIG. 1

H01Q 11/18

in which the selected sections are parallelly spaced

Definition statement

This place covers:

Illustrative example of subject-matter classified in this group:

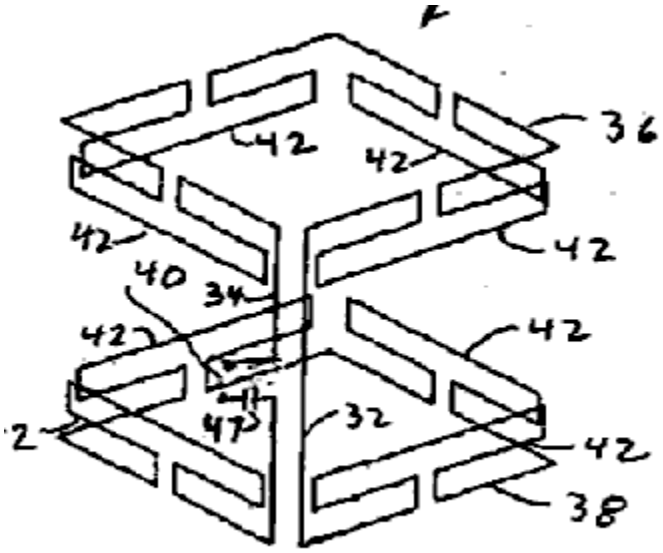

H01Q 11/20

V-aerials

Definition statement

This place covers:

A V-shaped arrangement of two horizontally arranged long-wire antenna.

In essence, it is a centre-fed dipole for which the arms are collinear; this has an effect on the impedance seen at the feedpoint.

Illustrative example of subject-matter classified in this group:

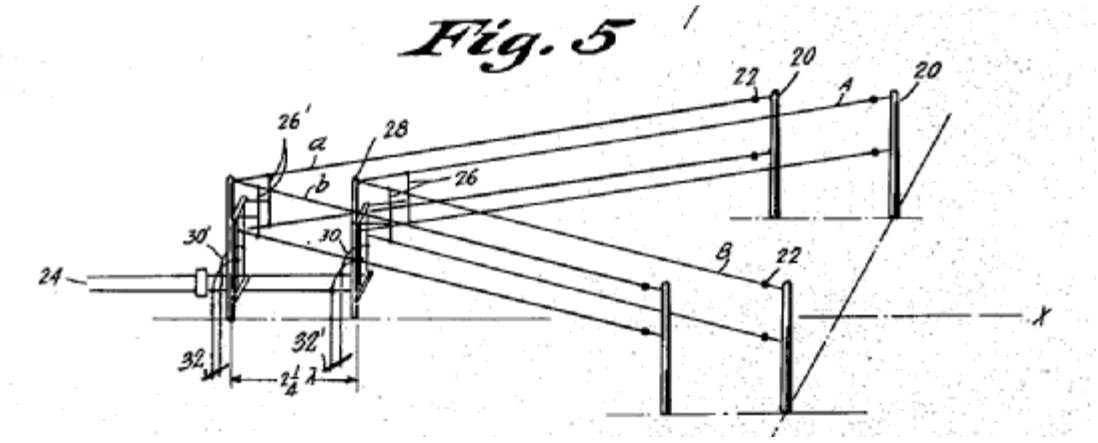

H01Q 13/00

Waveguide horns or mouths; Slot aerials; Leaky-waveguide aerials; Equivalent structures causing radiation along the transmission path of a guided wave {(multimode aerials H01Q 25/04)}

Definition statement

This place covers:

Horn radiator: a waveguide section in which the cross section increases towards an open end that is the aperture.

Slot antenna: a radiating element formed by a slot in a conducting surface.

Leaky wave antenna: an antenna that couples power in small increments per unit length, either continuously or discretely, from a traveling wave structure to free space.

References

Informative references

Attention is drawn to the following places, which may be of interest for search:

Multimode aerials	H01Q 25/04

H01Q 13/02

Waveguide horns

Definition statement

This place covers:

An antenna consisting of a waveguide section in which the cross sectional area increases towards an open end that is the aperture.

Illustrative example of subject-matter classified in this group:

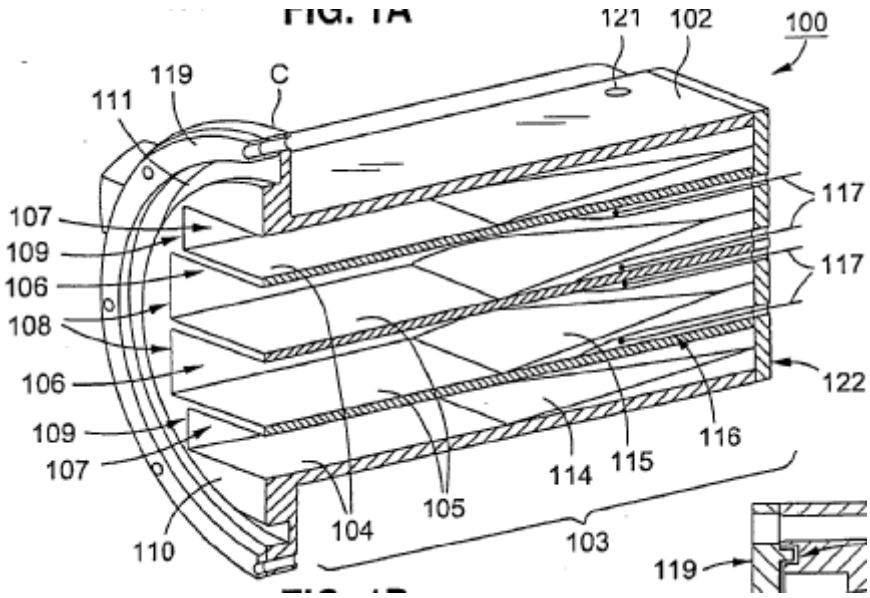

H01Q 13/0208

{Corrugated horns (waveguide mouth antenna with corrugated flange H01Q 13/065; manufacturing details H01Q 13/0283)}

Definition statement

This place covers:

A hybrid-mode horn antenna produced by cutting narrow transverse grooves of specified depth in the interior walls of the horn.

Illustrative example of subject-matter classified in this group:

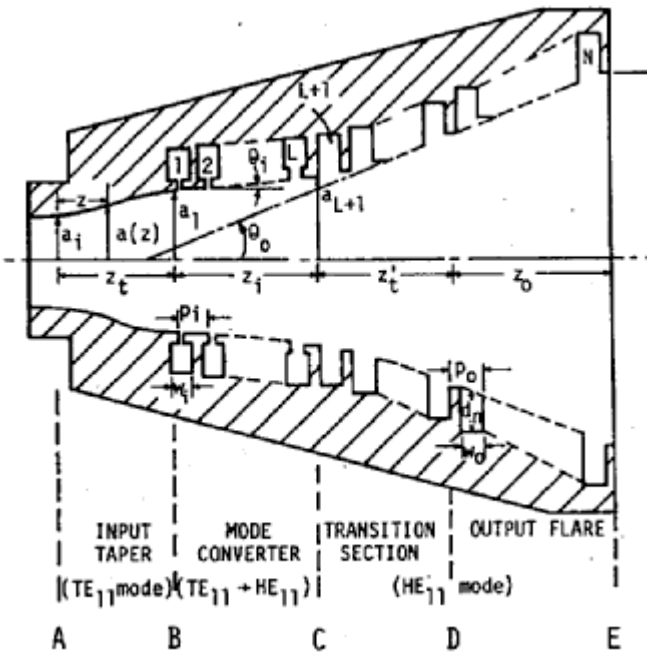

H01Q 13/0216

{Dual-depth corrugated horns}

Definition statement

This place covers:

Depth of the corrugations is not constant: e.g. for dual frequency operation, the depth still is a quarter wave at the respective frequencies.

Illustrative example of subject-matter classified in this group:

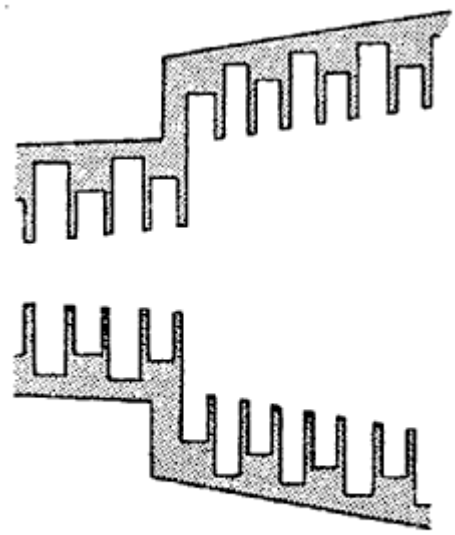

Fig. 3. Mode Transducer Showing Alternating Corrugation Depths

H01Q 13/0225

{of non-circular cross-section (H01Q 13/0216 takes precedence)}

Definition statement

This place covers:

Rectangular, pyramidal, elliptical.

Illustrative example of subject-matter classified in this group:

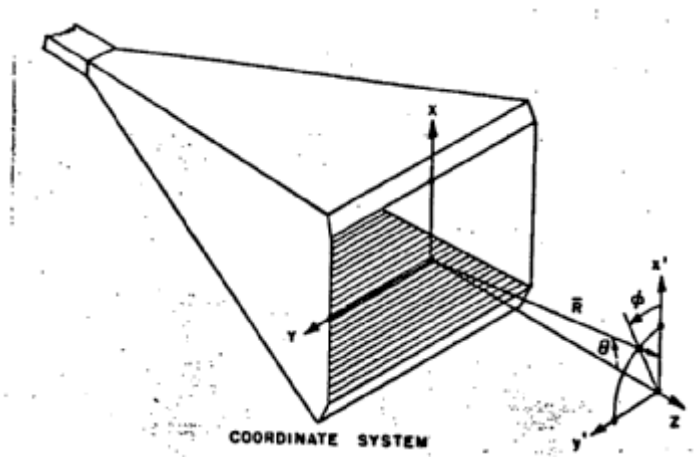

References

Limiting references

This place does not cover:

of non-circular cross-section	H01Q 13/0216

H01Q 13/0233

{Horns fed by a slotted waveguide array (biconical horns H01Q 13/06)}

Definition statement

This place covers:

Normally slots are disposed in the wall of a waveguide. Flanges are attached in order to increase directivity.

Illustrative example of subject-matter classified in this group:

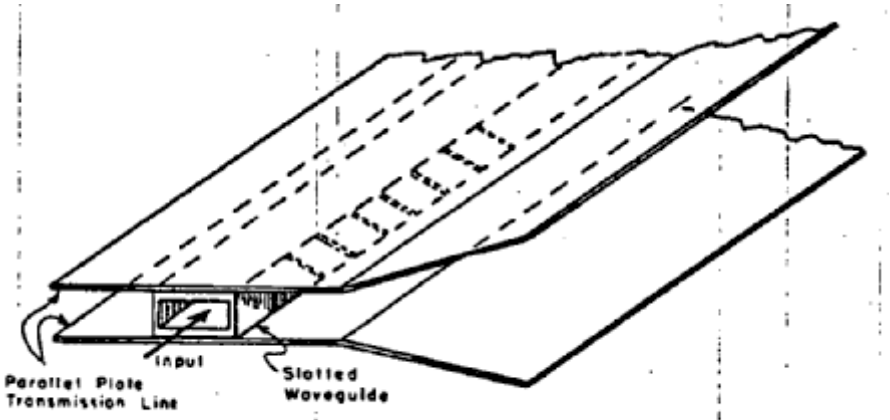

Fig. 1—A sketch of the variably polarized line source.

H01Q 13/0241

{radiating a circularly polarised wave (H01Q 13/0258 takes precedence; polarisation converters H01Q 15/244, in a waveguide H01P 1/17)}

Definition statement

This place covers:

Converters from linear polarisation to circular and vice versa; linear to linear (polarisation rotator), or from linear to elliptical.

Illustrative example of subject-matter classified in this group:

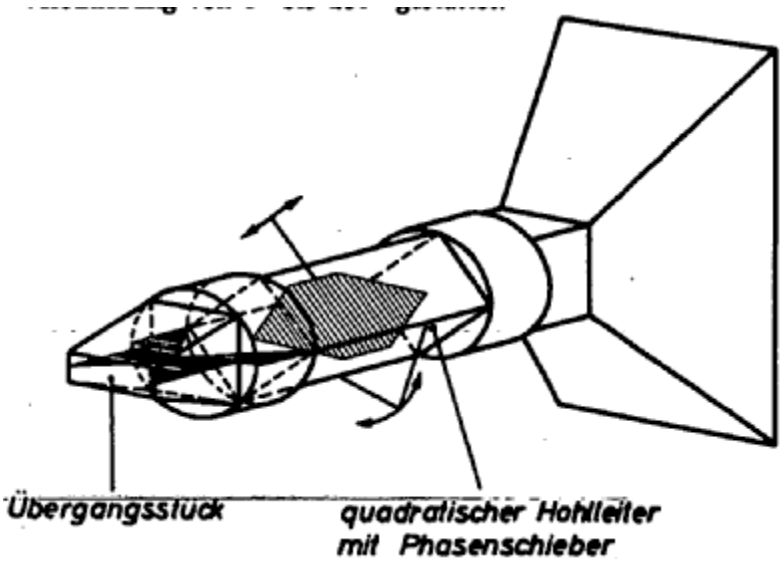

References

Limiting references

This place does not cover:

radiating a circularly polarised wave	H01Q 13/0258
takes precedence; polarisation converters	H01Q 15/244

in a waveguide	H01P 1/17

H01Q 13/025

{Multimode horn antennas; Horns using higher mode of propagation (H01Q 13/0241 takes precedence; multiple beam H01Q 25/04)}

Definition statement

This place covers:

Multiple modes are used either for matching, or for cross-polarisation reduction, or any other aim.

Illustrative example of subject-matter classified in this group:

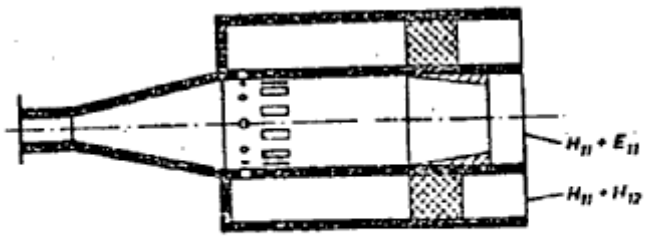

Fig. 5
Multimode coaxial radiator

References

Limiting references

This place does not cover:

Horns using higher mode of propagation	H01Q 13/0241
multiple beam	H01Q 25/04

Synonyms and Keywords

In patent documents, the following words/expressions are often used as synonyms:

- "hybrid mode", "dual mode", "potter horn" and "dompound horn antenna"

H01Q 13/0258

{Orthomode horns (Orthomode transducers H01P 1/161)}

Definition statement

This place covers:

Receiving or transmitting orthogonal polarised signals; polarisation filter which separates orthogonal polarisations within the same band; OMT.

Illustrative example of subject-matter classified in this group:

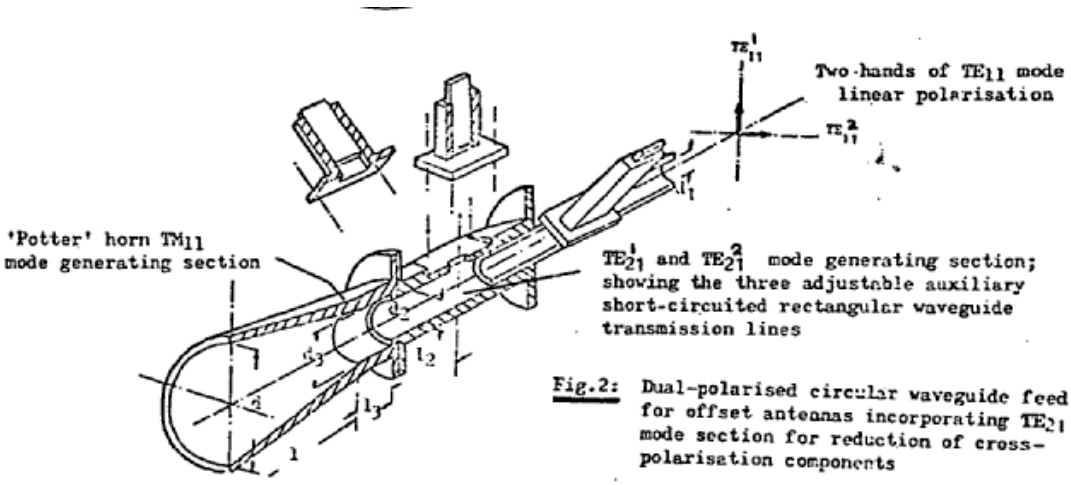

Fig.2: Dual-polarised circular waveguide feed for offset antennas incorporating TE21 mode section for reduction of cross-polarisation components

References

Limiting references

This place does not cover:

Orthomode transducers	H01P 1/161

Informative references

Attention is drawn to the following places, which may be of interest for search:

With combining or separating polarisations	H01P 1/2131

H01Q 13/0266

{provided with a flange or a choke}

Definition statement

This place covers:

Chokes are either for VSWR reduction, or for sidelobe reduction.

Illustrative example of subject-matter classified in this group:

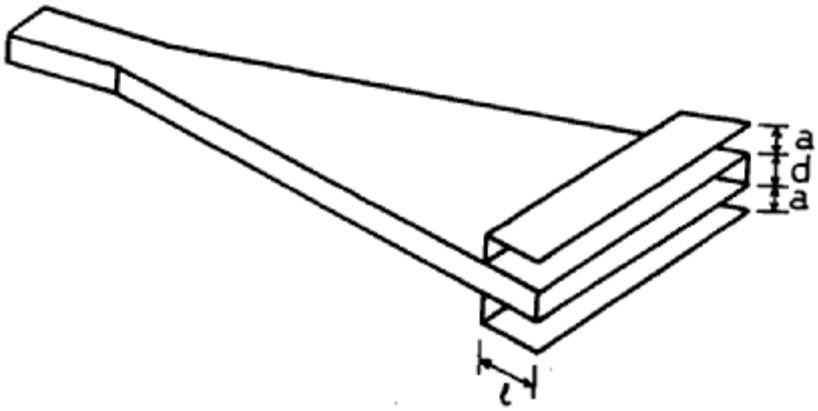

H01Q 13/0275

{Ridged horns (slot-line radiating ends H01Q 13/085)}

Definition statement

This place covers:

Ridges in pyramidal horns to expand frequency range of operation; ridge-loaded.

Illustrative example of subject-matter classified in this group:

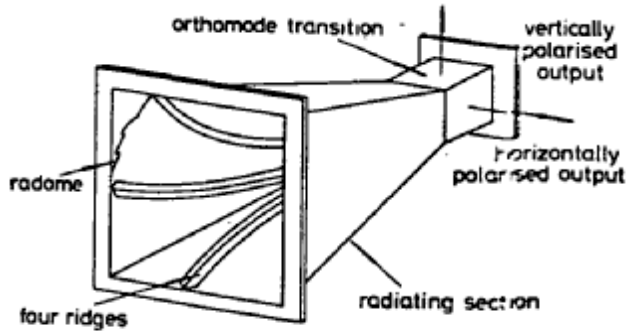

Fig. 2 *Typical dual-polarised horn for ESM applications*

References

Limiting references

This place does not cover:

slot-line radiating ends	H01Q 13/085

H01Q 13/0283

{Apparatus or processes specially provided for manufacturing horns}

Definition statement

This place covers:

Any manufacturing process related to horns is to be classified here.

Illustrative example of subject-matter classified in this group:

Fig. 1. A diagonal horn made in the split-block technique.

H01Q 13/0291

{for corrugated horns}

Definition statement

This place covers:

Any manufacturing process related to corrugated horns is to be classified here.

Illustrative example of subject-matter classified in this group:

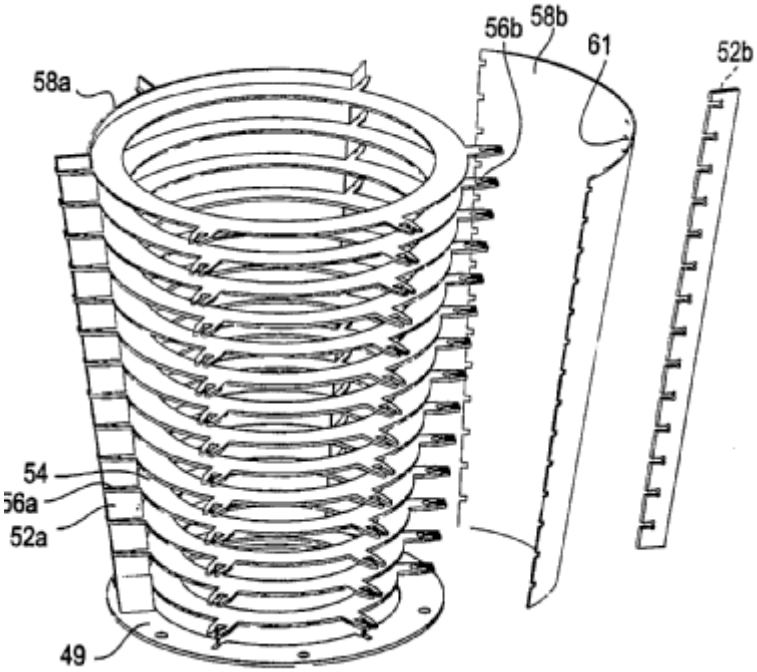

H01Q 13/04

Biconical horns (biconical dipoles comprising two conical surfaces having collinear axes and adjacent apices and fed by a two-conductor transmission line H01Q 9/28)

Definition statement

This place covers:

An antenna consisting of two conical horns having a common axis and vertex.

Illustrative example of subject-matter classified in this group:

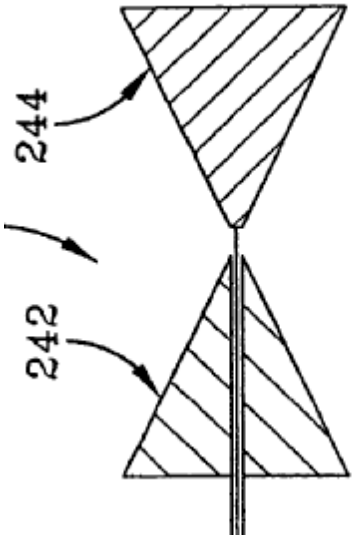

References

Limiting references

This place does not cover:

biconical dipoles comprising two conical surfaces having collinear axes and adjacent apices and fed by a two-conductor transmission line	H01Q 9/28

H01Q 13/06

Waveguide mouths (horns H01Q 13/02)

Definition statement

This place covers:

An open waveguide with round or square opening.

Illustrative example of subject-matter classified in this group:

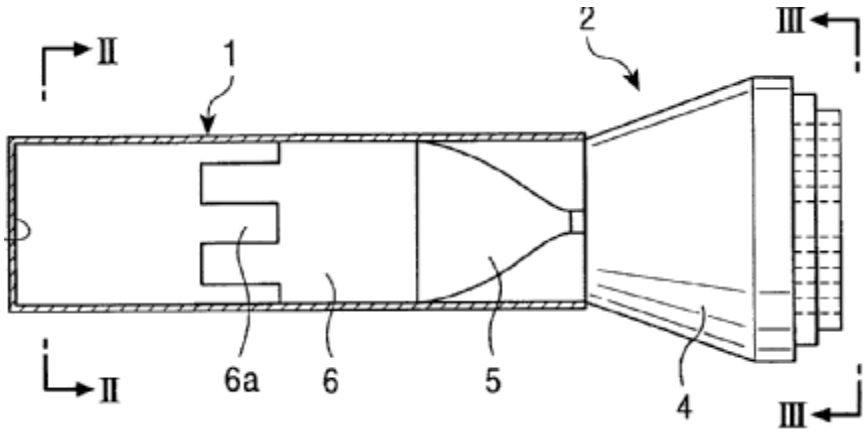

References

Limiting references

This place does not cover:

Waveguide mouths (horns	H01Q 13/02

H01Q 13/065

{provided with a flange or a choke}

Definition statement

This place covers:

Chokes for either for VSWR reduction, or for sidelobe reduction.

Illustrative example of subject-matter classified in this group:

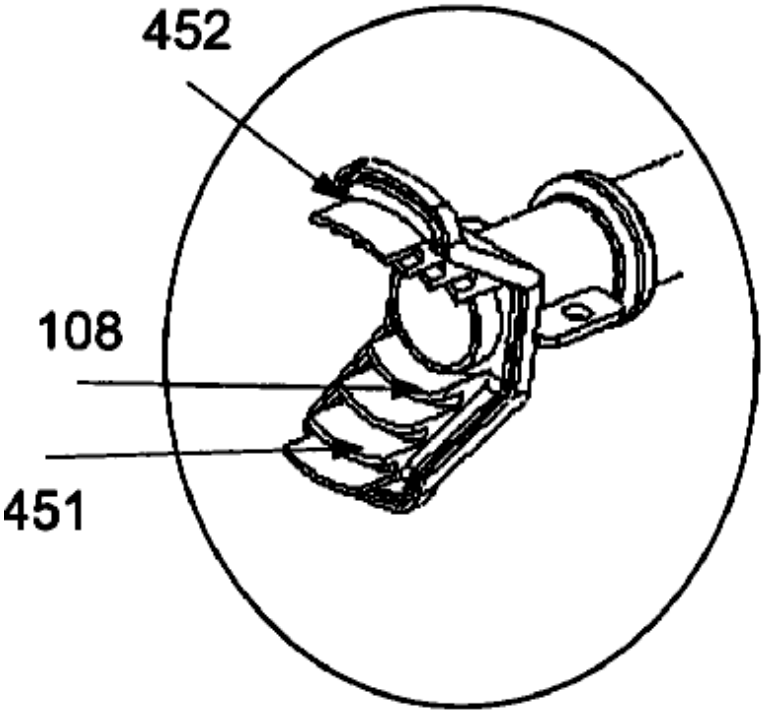

H01Q 13/08

Radiating ends of two-conductor microwave transmission lines, e.g. of coaxial lines, of microstrip lines

Definition statement

This place covers:

Open-ended coaxial line: current minimum and voltage maximum at the end; standing waves by superposition of running and reflected wave TEM-mode coaxial line as feeding a radiating annular slot.

Microstrip line, open-ended or with short -circuited edge.

Illustrative example of subject-matter classified in this group:

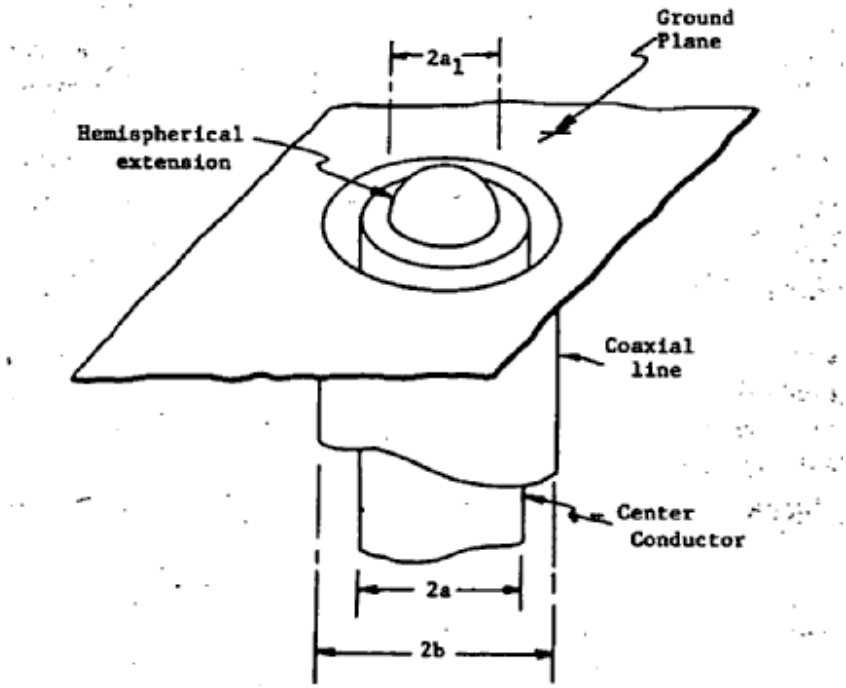

Fig. 1. The annular aperture antenna containing a hemispherical center conductor extension.

Special rules of classification

A microstrip-line as open-ended or with a short-circuited edge becomes a microstrip antenna when its length is half-wave resp. quarter-wave and its width less than a wavelength, then it behaves as a half wave open-ended transmission line resonator with radiating edges.

JPO classifies this antenna type here; however we classify said type as a resonant structure in H01Q 9/0407 and subgroups.

H01Q 13/085

{Slot-line radiating ends}

Definition statement

This place covers:

In the form of tapered or flared slot antenna: Are a type of travelling-wave antenna where a travelling wave propagates along the surface of the antenna taper with a phase velocity less than the speed of light. Under this condition, endf ire radiation results.

Illustrative example of subject-matter classified in this group:

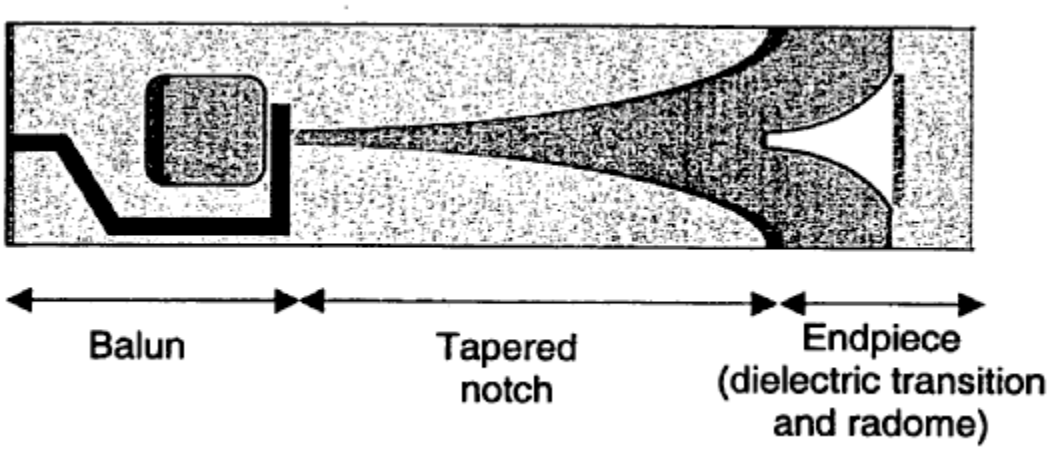

Synonyms and Keywords

In patent documents, the following abbreviations are often used:

TSA	tapered slot antenna

In patent documents, the following words/expressions are often used with the meaning indicated:

"Vivaldi antenna"	"endfire slotline".

H01Q 13/10

Resonant slot aerials

Definition statement

This place covers:

A radiating element formed by a slot in a conducting surface; in its simplest form as thin rectangular slot having a length of lam bda/2 or lambda cut in an extended thin flat sheet of metal excited by a voltage source to the opposite edges of the slot; complementary to dipole.

Slot, usually a half-wavelength long, is cut from a large (relative to the slot length) metal plate. The center conductor of a coaxial cable is connected to one side of the slot, the outside conductor is connected to the other side of the slot; the feed-point can be off-center to provide 50- Ohm impedance.

Illustrative example of subject-matter classified in this group:

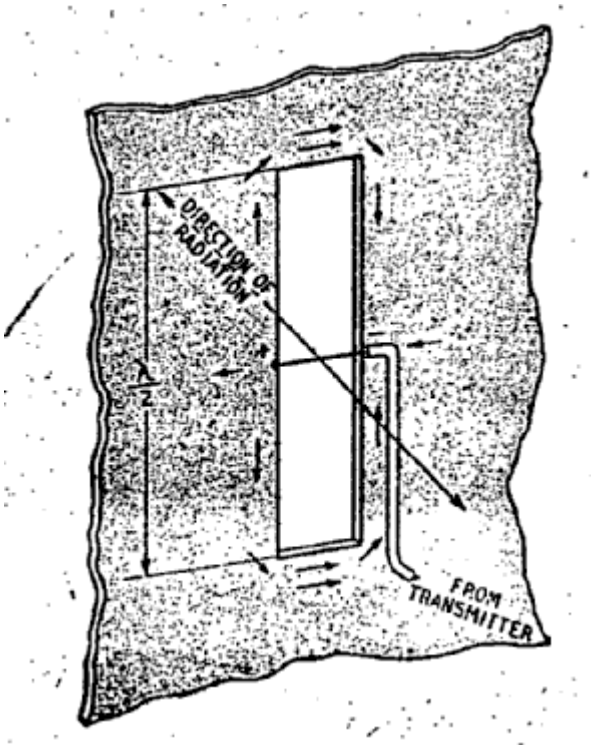

See: XP010608951.

Special rules of classification

Normally speaking, a slot is a cut for which the wavelength is around half a wavelength, due to the boundary conditions of the electric field.

A notch typically has an open end, and this causes that its minimum length is around a quarter wavelength.

In the field, slit is used to denominate both types of radiators (slot and notch).

Synonyms and Keywords

In patent documents, the following words/expressions are often used with the meaning indicated:

"votch- or slit antenna"	"annular - or ring slot antenna".

H01Q 13/103

{with variable reactance for tuning the antenna (tuning resonant circuits H03J)}

Definition statement

This place covers:

Basically impedance loading is used for tuning the antenna; here it can be a reactive load (L/C) or a resistive one (R), contrary to the definition of the class.

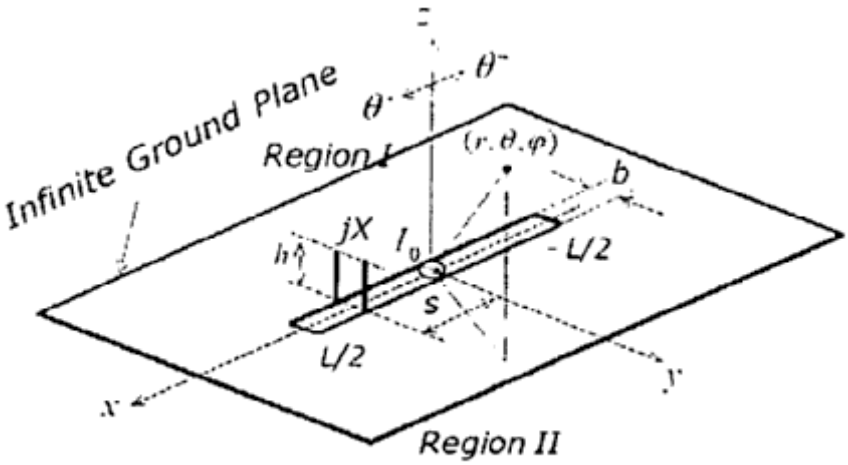

Fig. 1 A slot antenna element loaded with reactance jX.

References

Limiting references

This place does not cover:

with variable reactance for tuning the antenna	H03J

H01Q 13/106

{Microstrip slot antennas (patch antenna elements H01Q 9/0407)}

Definition statement

This place covers:

Slot in conducting surface bonded to a thin grounded dielectric substrate.

Illustrative example of subject-matter classified in this group:

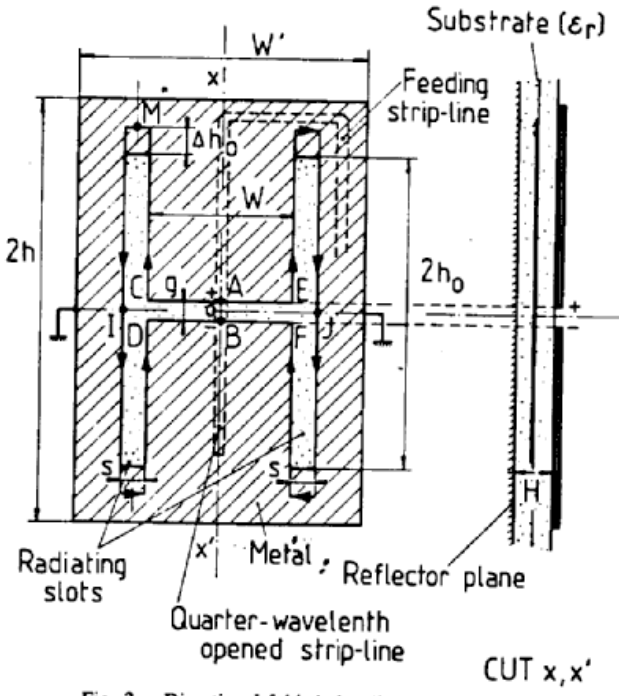

Fig. 3. Directional folded slot dipole geometry.

References

Limiting references

This place does not cover:

Microstrip slot antennas (patch antenna elements)	H01Q 9/0407

Special rules of classification

The geometries can be the following: narrow slot/slit, circular slot, annular -, ring- ,slot-ring antenna; spiral, bow-tie; folded slot antenna.

H01Q 13/12

Longitudinally slotted cylinder aerials; Equivalent structures

Definition statement

This place covers:

A cylindrical waveguide with a continuous slot in its wall; the geometry can be such it is not continuous, but curved or wave, in order to change the excitation law along the longitudinal extent of the waveguide.

Examples: as narrow slot/slit, circular slot, annular -, ring- ,slot-ring antenna; spiral, bow-tie; folded slot antenna.

Illustrative example of subject-matter classified in this group:

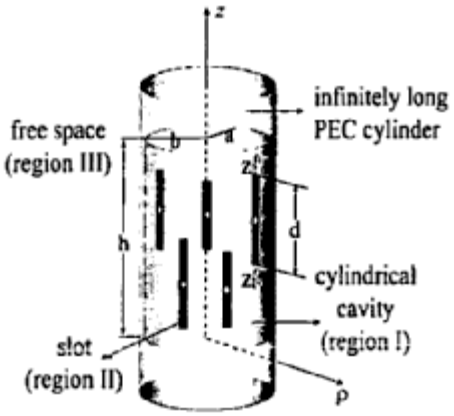

H01Q 13/14

Skeleton cylinder aerials

Special rules of classification

Inactive.

H01Q 13/16

Folded slot aerials

Definition statement

This place covers:

Illustrative example of subject-matter classified in this group:

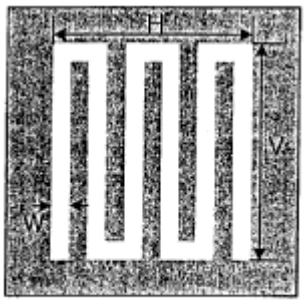

Figure 1 Top view of the conventional Meander-type slot antenna

H01Q 13/18

the slot being backed by, or formed in boundary wall of, a resonant cavity (longitudinally slotted cylinder H01Q 13/12); {Open cavity antennas}

Definition statement

This place covers:

Illustrative example of subject-matter classified in this group:

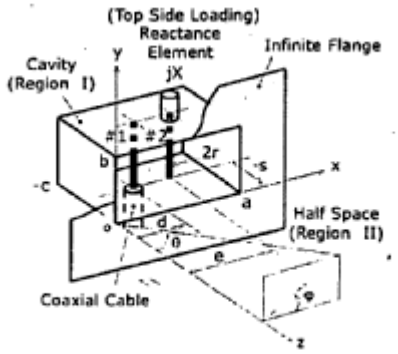

Fig. 1 The geometry and the coordinate system of the cut off cavity-backed slot radiator with one external reactance element.

References

Limiting references

This place does not cover:

ongitudinally slotted cylinder	H01Q 13/12

H01Q 13/20

Non-resonant leaky-waveguide or transmission-line aerials; Equivalent structures causing radiation along the transmission path of a guided wave {(varying the phase velocity H01Q 3/443; near-field transmission systems using leaky cable H04B 5/0018)}

Definition statement

This place covers:

An antenna that couples power in small increments per unit length, either continuously or discretely, from a travelling wave structure to free space; a guiding structure that leaks power all along its length; typically 20 times lambda; remaining power in matched load.

Illustrative example of subject-matter classified in this group:

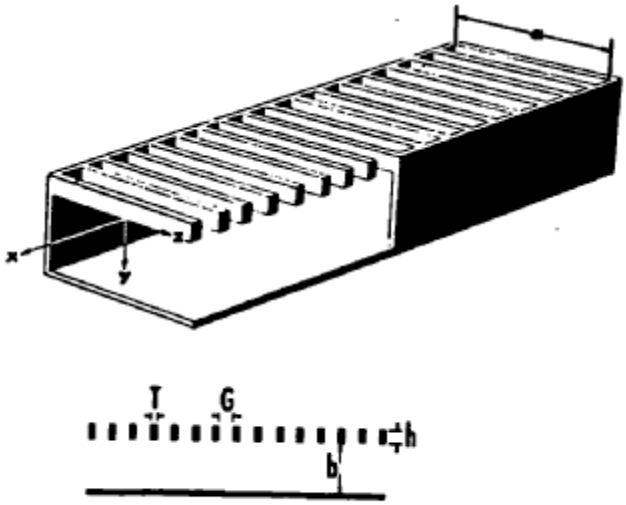

Figure 1. Serrated Rectangular Waveguide

References

Limiting references

This place does not cover:

varying the phase velocity	H01Q 3/443
near-field transmission systems using leaky cable	H04B 5/0018

H01Q 13/203

{Leaky coaxial lines}

Definition statement

This place covers:

The radiation happens via periodic slits/slots or holes in the outer conductor; variation of slot length, width and inclination angle.

Illustrative example of subject-matter classified in this group:

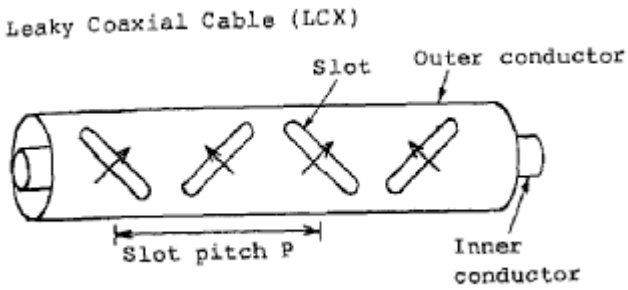

References

Informative references

Attention is drawn to the following places, which may be of interest for search:

For concentric or coaxial cables	H01B 13/20
Using leaky or radiating cables, e.g. leaky coaxial cables or power lines for inductive transmission	H04B 5/0018

Synonyms and Keywords

Radiating coaxial cable.

H01Q 13/206

{Microstrip transmission line antennas}

Definition statement

This place covers:

A microstrip transmission line is normally non radiating but can be made to radiate:

- by a series of patch antennas connected by a microstrip line;
- by a series of radiators, resonant or not, coupled by proximity to the microstrip line;
- bending the strip conductor (meandered periodically, sinusoidal, trapezoidal, zigzag).

Illustrative example of subject-matter classified in this group:

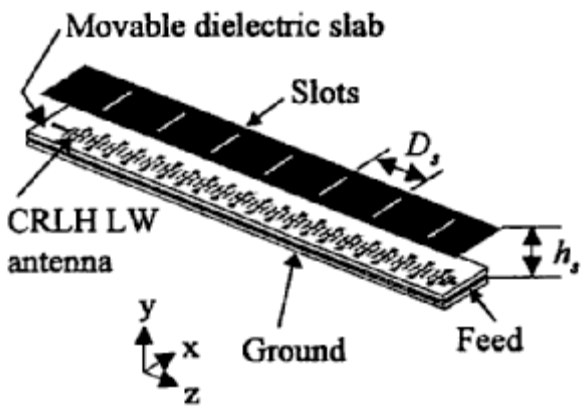

Fig. 1 Structure of 21-element steerable CRLH LW antenna with movable dielectric slab (slot interval D_s=1.8 mm, distance between slots and CRLH LW antenna h_s=1.5 mm).

Synonyms and Keywords

In patent documents, the following words/expressions are often used with the meaning indicated:

"microstrip travelling wave"	"microstrip leaky wave".

H01Q 13/22

Longitudinal slot in boundary wall of waveguide or transmission line {(H01Q 13/203 takes precedence)}

Definition statement

This place covers:

Leaky waveguide with long or narrow slits/slots or holes.

Illustrative example of subject-matter classified in this group:

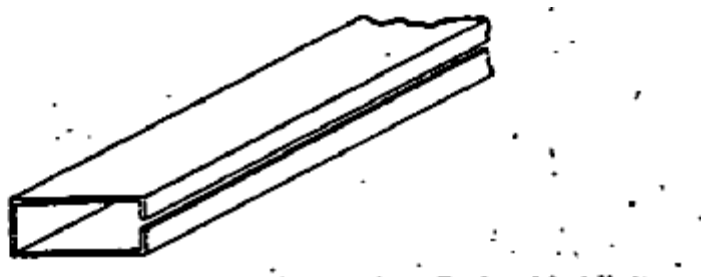

Bild 2. Enger Schlitz in der Schmalseite eines Rechteckhohlleiters

References

Limiting references

This place does not cover:

Longitudinal slot in boundary wall of waveguide or transmission line	H01Q 13/203

H01Q 13/24

constituted by a dielectric or ferromagnetic rod or pipe (H01Q 13/28 takes precedence)

Definition statement

This place covers:

An antenna that employs a shaped dielectric rod as the electrically significant part of a radiating element. excited by a circular or rectangular waveguide; a surface wave travels along the rod till the end where it radiates into space.

The polyrod antenna is a notable example of the dielectric rod when constructed of polystyrene. Ferrod made of ferrite material.

Illustrative example of subject-matter classified in this group:

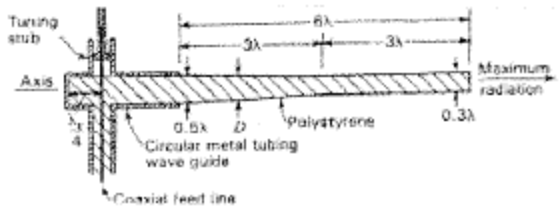

References

Limiting references

This place does not cover:

constituted by a dielectric or ferromagnetic rod or pipe	H01Q 13/28

H01Q 13/26

Surface waveguide constituted by a single conductor, e.g. strip conductor

Definition statement

This place covers:

A surface wave radiates only at discontinuities, i.e. these discontinuities are therefore a requirement.

Illustrative example of subject-matter classified in this group:

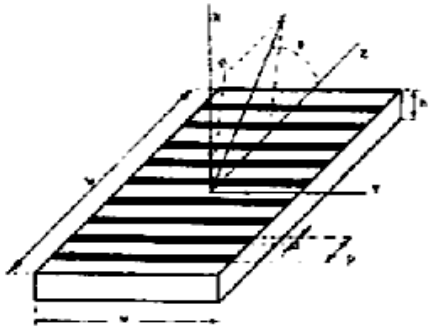

Fig. 1. Leaky wave antenna.

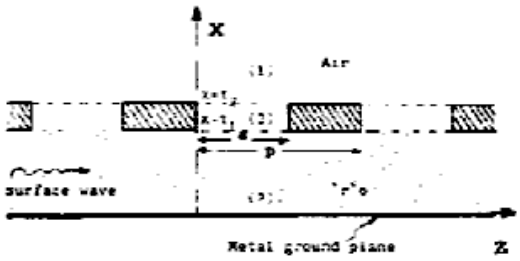

Fig. 2. Structure under consideration.

H01Q 13/28

comprising elements constituting electric discontinuities and spaced in direction of wave propagation, e.g. dielectric elements, conductive elements forming artificial dielectric (Yagi aerials H01Q 19/30)

Definition statement

This place covers:

Periodic modulation of the guiding structure: e.g. periodic metal strips Guiding structure: dielectric waveguide or dielectric image guide.

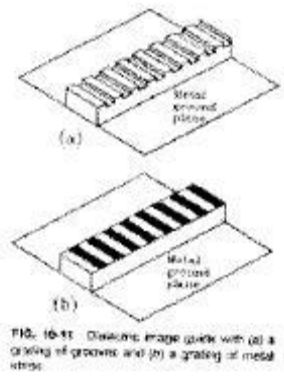

Discontinuities by:

- grating by periodic array of grooves or b) grating of periodic array of metal strips;
- continuous transverse stub;

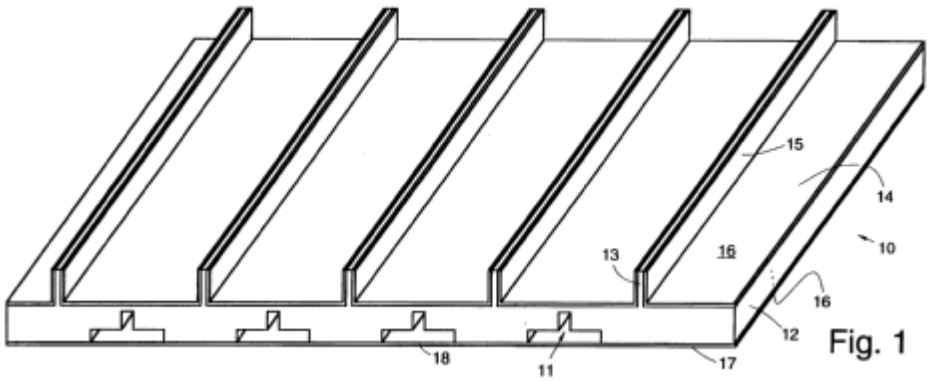

Fig. 1

- non-radiative dielectric guide/waveguide (NRD) as antenna as leaky NRD.

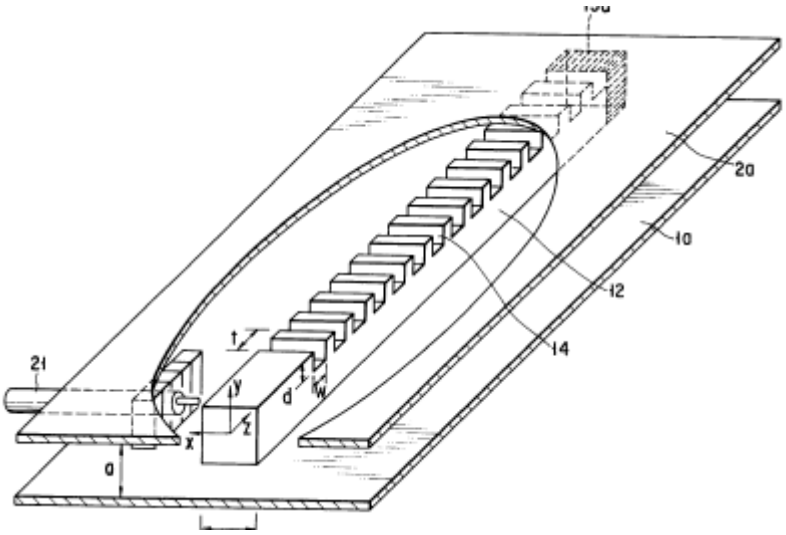

References

Limiting references

This place does not cover:

elements, conductive elements forming artificial dielectric	H01Q 19/30

H01Q 15/00

Devices for reflection, refraction, diffraction, or polarisation of waves radiated from an aerial, e.g. quasi-optical devices (variable for purpose of altering directivity H01Q 3/00; arrangements of such devices for guiding waves H01P 3/20; variable for purpose of modulation H03C 7/02)

Definition statement

This place covers:

Lenses, reflectors and polarising devices per se or in combination with a classification in H01Q 19/00 and subgroups, H01Q 21/00 and subgroups or H01Q 25/00 and subgroups if aspects of the lens, reflector etc. per se are also relevant.

References

Informative references

Attention is drawn to the following places, which may be of interest for search:

Variable for purpose of altering directivity	H01Q 3/00
Arrangements of such devices for guiding waves	H01P 3/20
Variable for purpose of modulation	H03C 7/02

H01Q 15/0006

{Devices acting selectively as reflecting surface, as diffracting or as refracting device, e.g. frequency filtering or angular spatial filtering devices (H01Q 15/12, H01Q 15/22, H01Q 15/24 take precedence)}

Definition statement

This place covers:

This class and subclasses emphasize the frequency dependence on impedance and other properties of the device.

References

Limiting references

This place does not cover:

Devices acting selectively as reflecting surface, as diffracting or as refracting device, e.g. frequency filtering or angular spatial filtering devices	H01Q 15/12, H01Q 15/22, H01Q 15/24

H01Q 15/0013

{said selective devices working as frequency-selective reflecting surfaces, e.g. FSS, dichroic plates, surfaces being partly transmissive and reflective}

Definition statement

This place covers:

Perforated plates, where the apertures can have any generalised shape.

Illustrative example of subject-matter classified in this group:

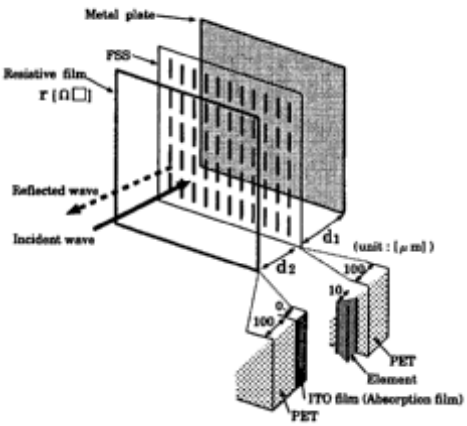

H01Q 15/002

{said selective devices being reconfigurable or tunable, e.g. using switches or diodes}

Definition statement

This place covers:

Normally switches or variable impedance are used for the tuning or reconfiguration.

Illustrative example of subject-matter classified in this group:

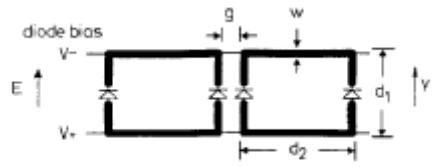

Active FSS square loop

H01Q 15/0026

{said selective devices having a stacked geometry or having multiple layers}

Definition statement

This place covers:

Multiple layers of (different) FSS's are present.

Illustrative example of subject-matter classified in this group:

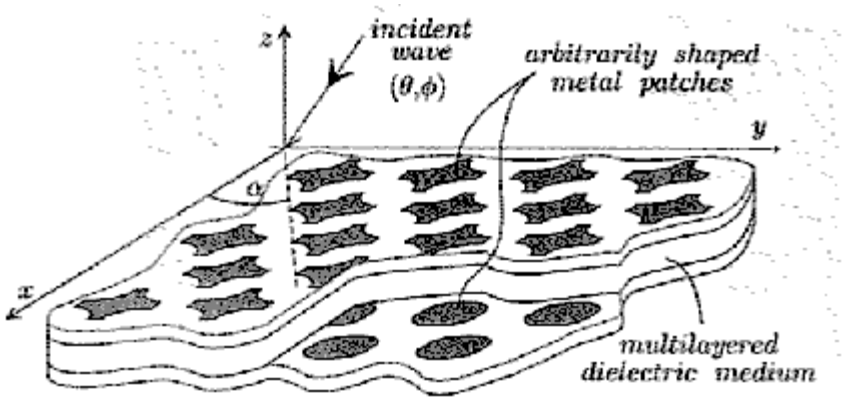

Fig. 1. Frequency selective surface consisting of a periodic array of metal patches with an arbitrary shape. The patches are located on different layers and embedded in a stratified dielectric medium.

H01Q 15/0033

{used for beam splitting or combining, e.g. acting as a quasi-optical multiplexer (H01Q 19/191 and H01Q 19/195 take precedence)}

Definition statement

This place covers:

As used in beam waveguides.

Illustrative example of subject-matter classified in this group:

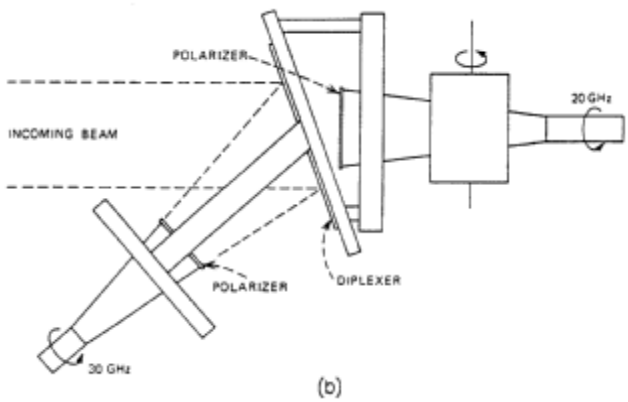

References

Limiting references

This place does not cover:

used for beam splitting or combining, e.g. acting as a quasi-optical multiplexer	H01Q 19/191, H01Q 19/195

H01Q 15/004

{using superconducting materials or magnetised substrates}

Definition statement

This place covers:

This class emphasizes the materials used: chiral materials, superconducting materials, etc.

Illustrative example of subject-matter classified in this group:

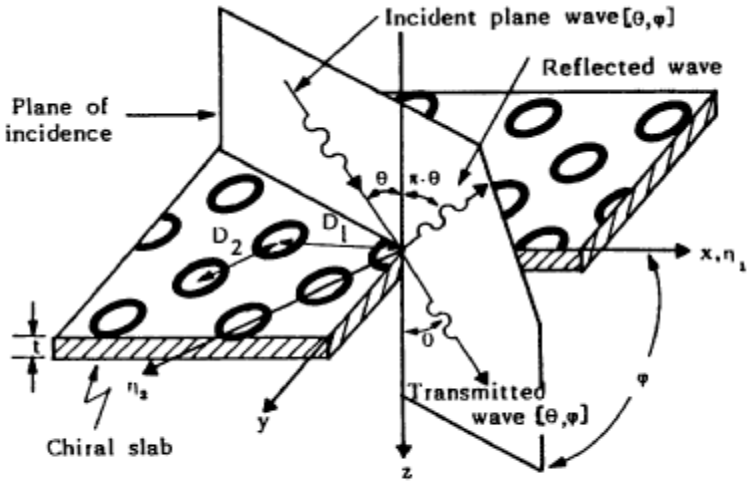

Figure 1. Geometry of the ring array on a chiral slab.

H01Q 15/0046

{Theoretical analysis and design methods of such selective devices}

Definition statement

This place covers:

For example randomised FSS cells based on genetic algorithms.

Illustrative example of subject-matter classified in this group:

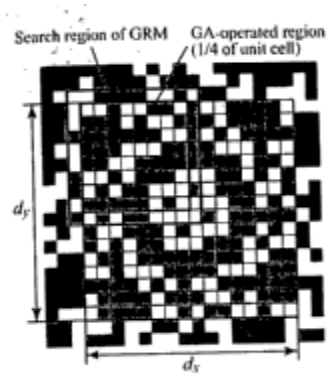

H01Q 15/0053

{Selective devices used as spatial filter or angular sidelobe filter}

Definition statement

This place covers:

Illustrative example of subject-matter classified in this group:

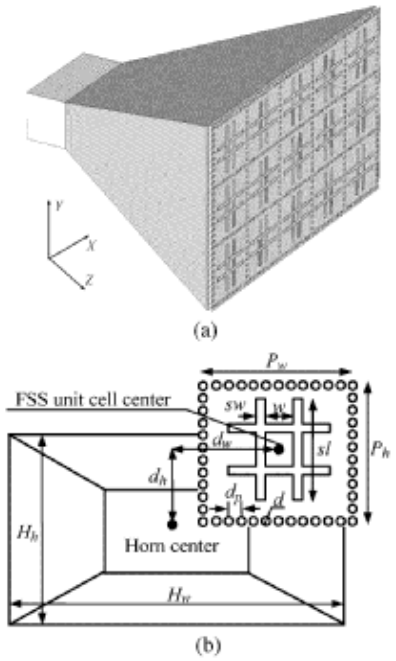

Fig. 1. Geometry of normal horn antenna covered with SIWC-FSS at its aperture. (a) 3-D view. (b) Front view.

H01Q 15/006

{Selective devices having photonic band gap materials or materials of which the material properties are frequency dependent, e.g. perforated substrates, high-impedance surfaces}

Definition statement

This place covers:

Emphasizes on band gap materials, in any application.

Illustrative example of subject-matter classified in this group:

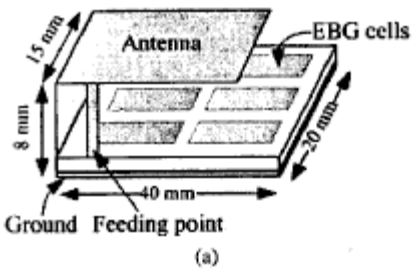

H01Q 15/0066

{said selective devices being reconfigurable, tunable or controllable, e.g. using switches}

Definition statement

This place covers:

Emphasis is on reconfigurability and tunability.

Illustrative example of subject-matter classified in this group:

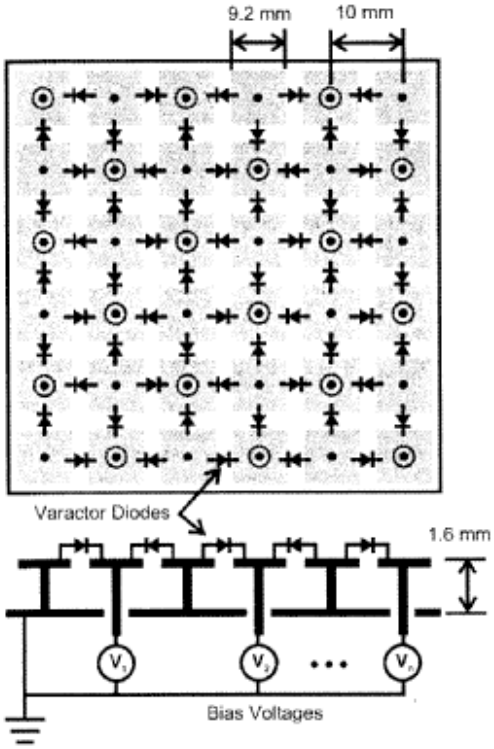

H01Q 15/0073

{said selective devices having corrugations}

Definition statement

This place covers:

Either corrugations in a single direction, or in two orthogonal directions; may be filled with dielectric material.

Illustrative example of subject-matter classified in this group:

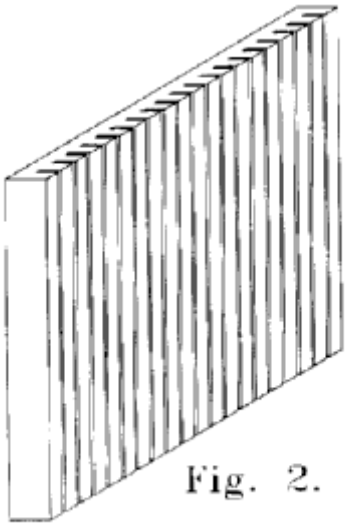

Fig. 2.

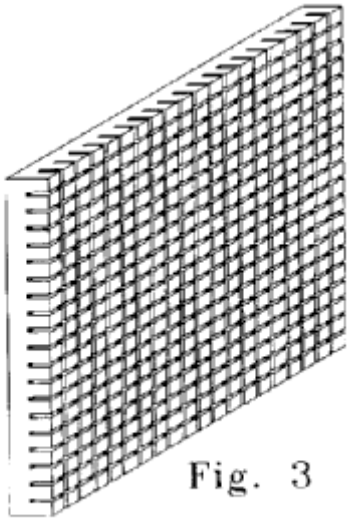

Fig. 3

H01Q 15/008

{said selective devices having Sievenpipers' mushroom elements}

Definition statement

This place covers:

Or similar structures to these mushroom elements: triangular/square/circular shapes.

Illustrative example of subject-matter classified in this group:

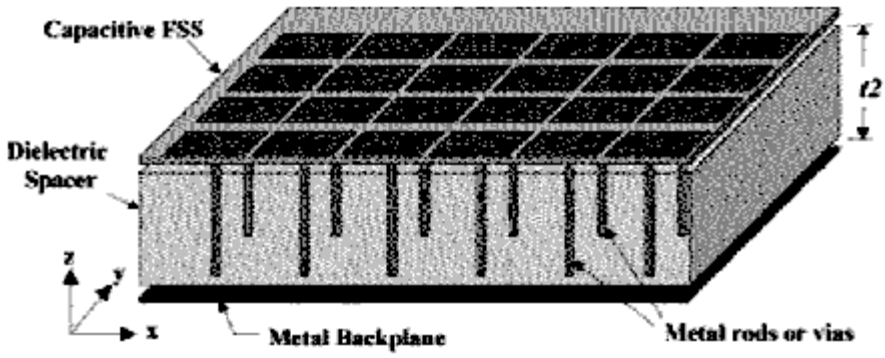

Fig. 1. Sketch of the typical Sievenpiper structure.

H01Q 15/0086

{said selective devices having materials with a synthesized negative refractive index, e.g. metamaterials or left-handed materials}

Definition statement

This place covers:

These materials do not exists in nature, but they are artificial, and strongly frequency dependent.

Illustrative example of subject-matter classified in this group:

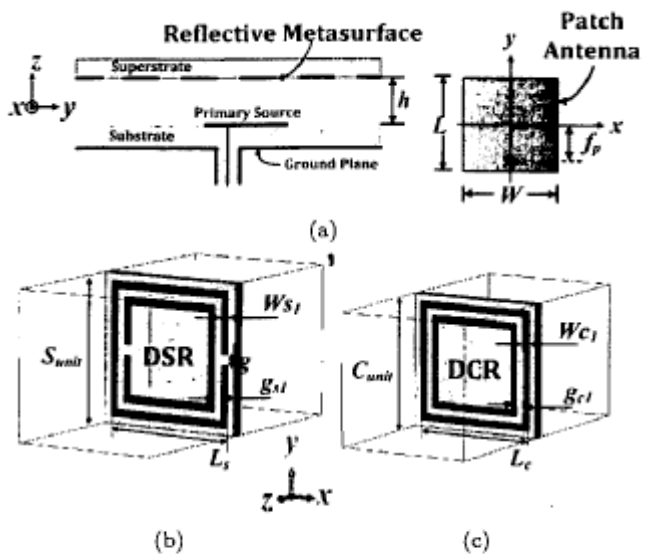

Fig. 1 (a) Configuration of a microstrip patch antenna with reflective metasurface (RMS) as a superstrate,(b) a unit cell of double split-ring resonator (DSR) and (c) a unit cell of double closed-ring resonator (DCR).

H01Q 15/0093

{having a fractal shape}

Definition statement

This place covers:

ANY fractal shape (sierpinski/peano/ ...).

Illustrative example of subject-matter classified in this group:

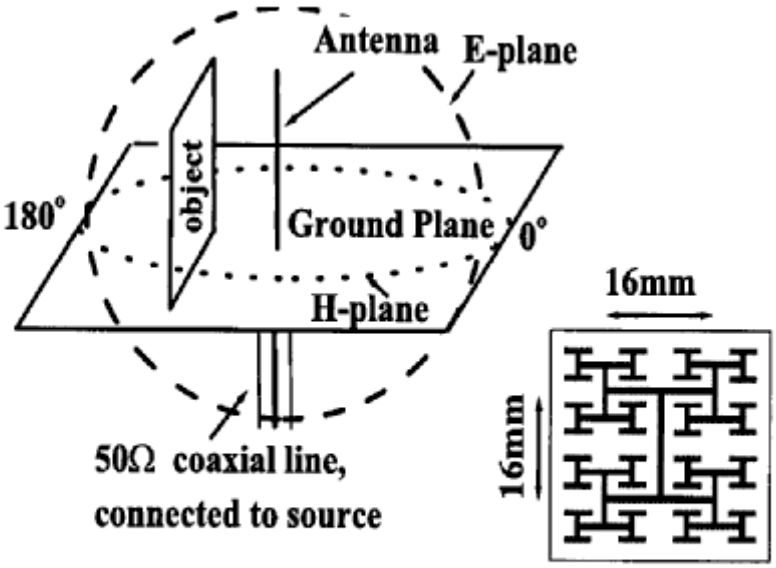

FIG. 1. Schematic picture of the experimental setup. Inset shows the six-level fractal structure: First-level line length 16 mm, linewidth = 1 mm, thickness = 0.5 mm. The plate measures 28 × 29 mm.

H01Q 15/02

Refracting or diffracting devices, e.g. lens, prism

Definition statement

This place covers:

Lens, electromagnetic. A three-dimensional structure, through which electromagnetic waves can pass, possessing an index of refraction that may be a function of position and a shape that is chosen so as to control the exiting aperture illumination to transform a spherical wavefront.

- lens constructed of dielectrics;
- of metallic or artificial dielectrics.

Examples: Wire -grid lens, that is constructed of wire grids, in which the effective index of refraction (path delay) is locally controlled by the dimensions and the spacing of the wire grid; zoned lenses, that is various portions (zones or steps) form a discontinuous surface such that a desired phase distribution of the aperture illumination is achieved.

Illustrative example of subject-matter classified in this group:

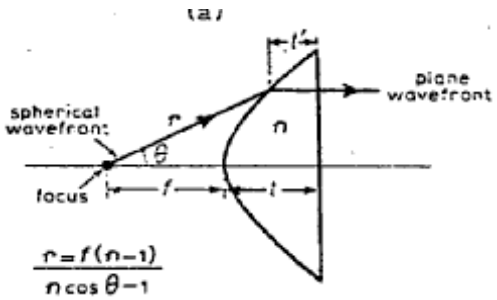

H01Q 15/04

comprising wave-guiding channel or channels bounded by effective conductive surfaces substantially perpendicular to the electric vector of the wave, e.g. parallel-plate waveguide lens

Definition statement

This place covers:

Metal-plate lens using parallel metal plates, spaced a fraction of a wavelength apart; also use of parallel wires.

Illustrative examples of subject-matter classified in this group:

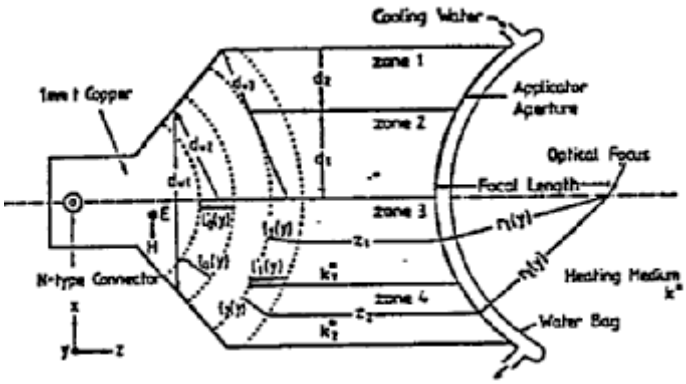

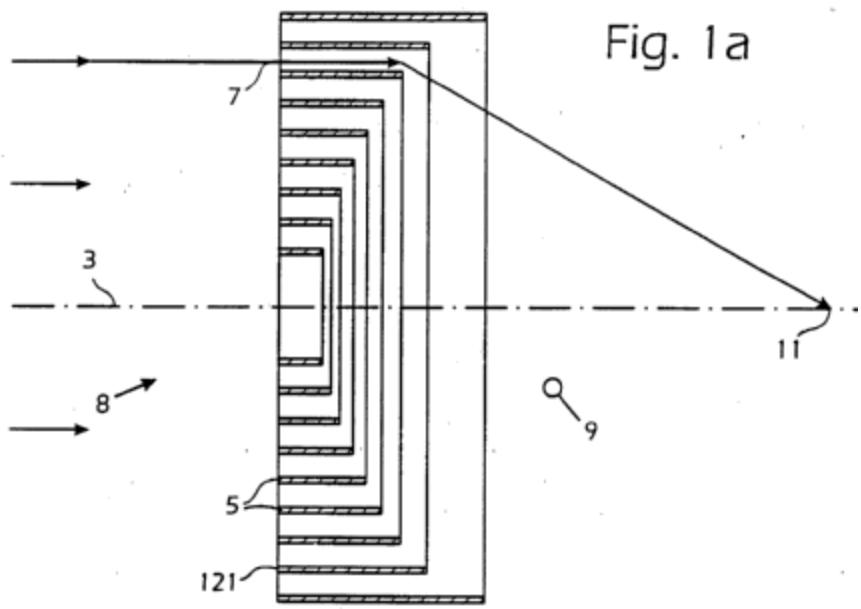

H01Q 15/06

comprising plurality of wave-guiding channels of different length

Definition statement

This place covers:

Consisting of an array of waveguide tubes or transmission lines in which focusing is achieved by means of phase correction introduced by the tube or line length or the tube section profile.

Illustrative example of subject-matter classified in this group:

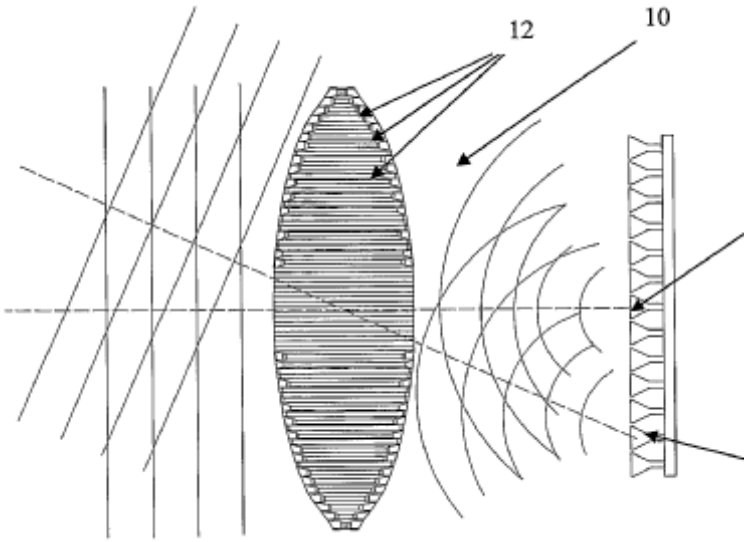

Synonyms and Keywords

Waveguide-lens, Bootlace lens antenna consists of an input array connected to an output array by transmission lines; Rotman lens.

H01Q 15/08

formed of solid dielectric material

Definition statement

This place covers:

Conventional dielectric lenses: Materials: made of thermoplastics, styropor, Rexolite, teflon, styrofoam, foamed glas, polystyrene, plexiglas.

Luneberg lens: A lens with a circular cross section having an index of refraction varying only in the radial direction (e.g. two or more concentric spheres).

Illustrative example of subject-matter classified in this group:

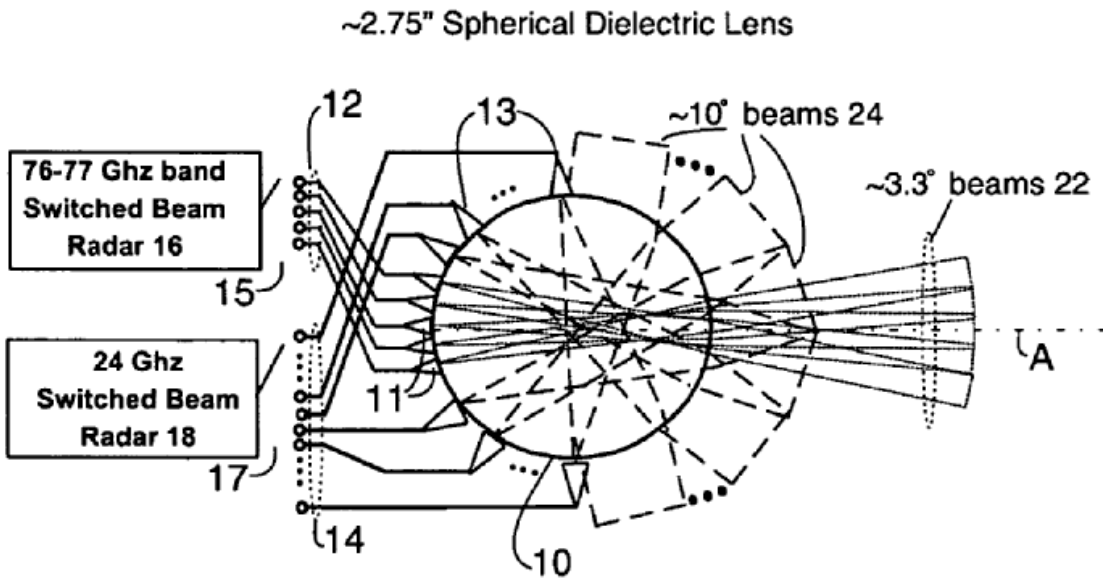

H01Q 15/10

comprising three-dimensional array of impedance discontinuities, e.g. holes in conductive surfaces or conductive discs forming artificial dielectric (leaky-waveguide aerials H01Q 13/28)

Definition statement

This place covers:

Artificial dielectric by distribution of conducting or non-conducting elements in a medium of relatively low dielectric constant: lightweight in respect to solid dielectric lenses.

Illustrative example of subject-matter classified in this group:

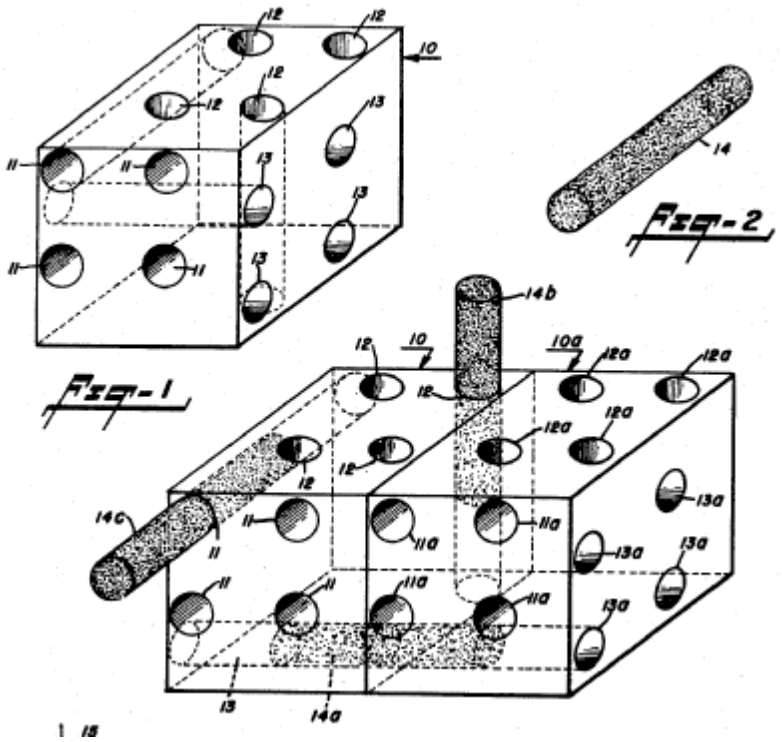

References

Limiting references

This place does not cover:

leaky-waveguide aerials	H01Q 13/28

H01Q 15/12

functioning also as polarisation filter {(polarisation converters H01Q 15/242)}

Definition statement

This place covers:

For example: dielectric microwave lens or prism with polarisation filter located on one side of the lens.

Illustrative example of subject-matter classified in this group:

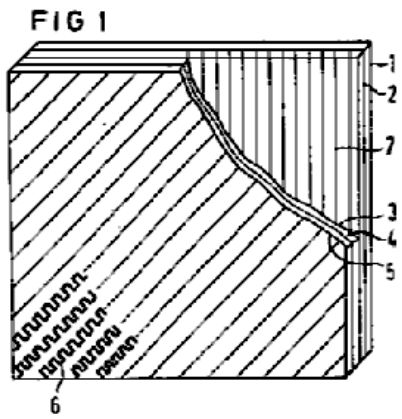

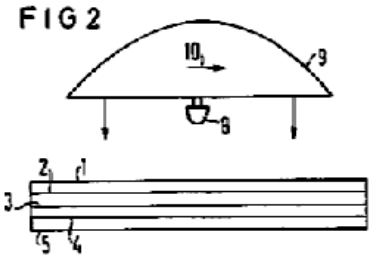

References

Limiting references

This place does not cover:

functioning also as polarisation filter	H01Q 15/242

H01Q 15/14

Reflecting surfaces; Equivalent structures {(electromagnetic shields H01Q 1/526; radar-reflecting targets in general F41J 2/00)}

Definition statement

This place covers:

Basically anything that reflects, i.e. the reflectors proper.

Illustrative example of subject-matter classified in this group:

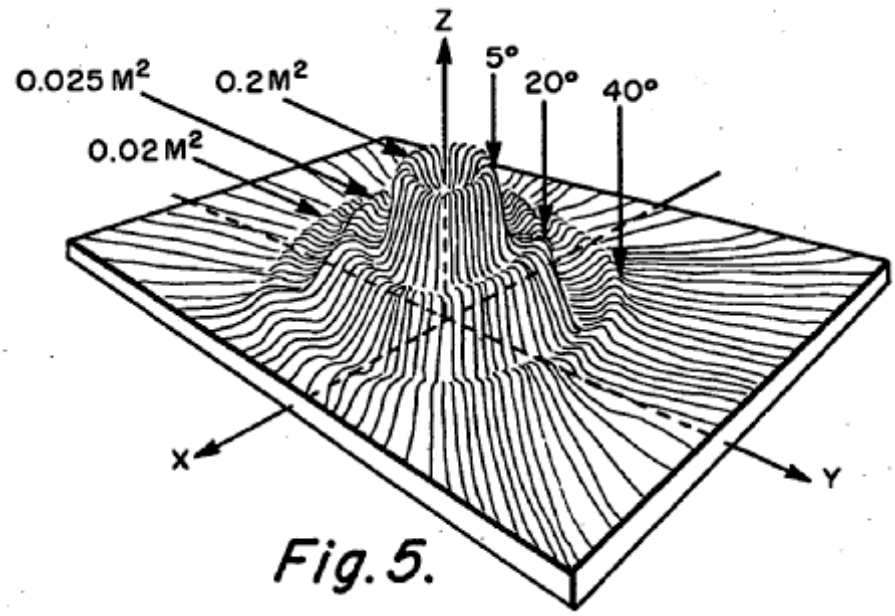

Fig. 5.

References

Limiting references

This place does not cover:

electromagnetic shields	H01Q 1/526
radar-reflecting targets in general	F41J 2/00

H01Q 15/141

{Apparatus or processes specially adapted for manufacturing reflecting surfaces}

Definition statement

This place covers:

Any manufacturing method goes here.

Illustrative example of subject-matter classified in this group:

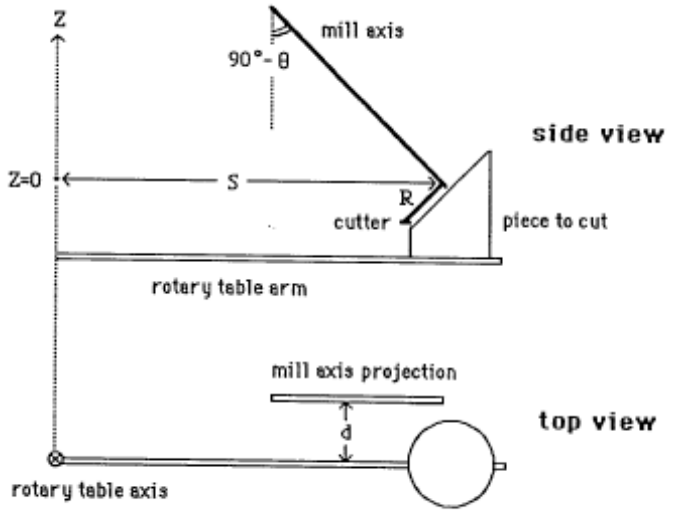

Fig. I Schematic of the milling machine setup

H01Q 15/142

{using insulating material for supporting the reflecting surface}

Definition statement

This place covers:

Insulating material fulfills the role of support or backing structure.

Illustrative example of subject-matter classified in this group:

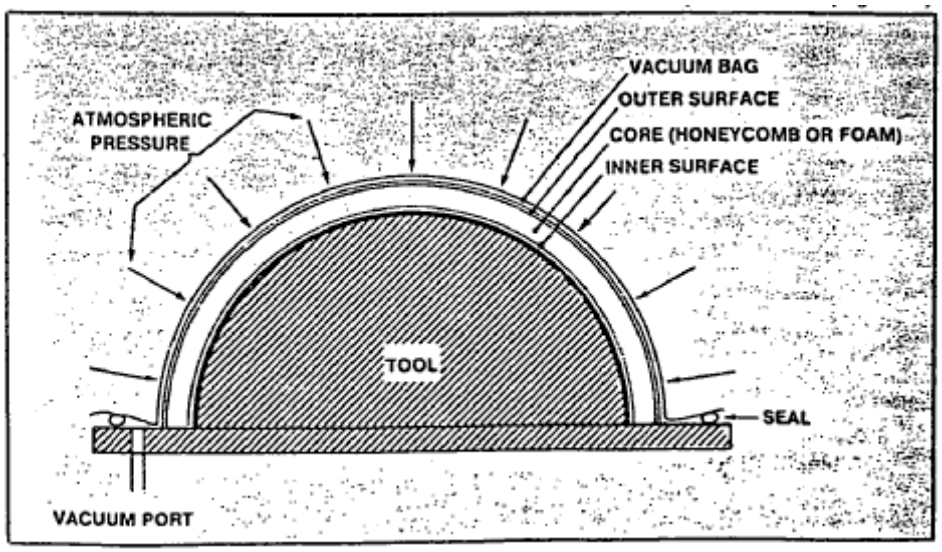

H01Q 15/144

{with a honeycomb, cellular or foamed sandwich structure}

Definition statement

This place covers:

Illustrative example of subject-matter classified in this group:

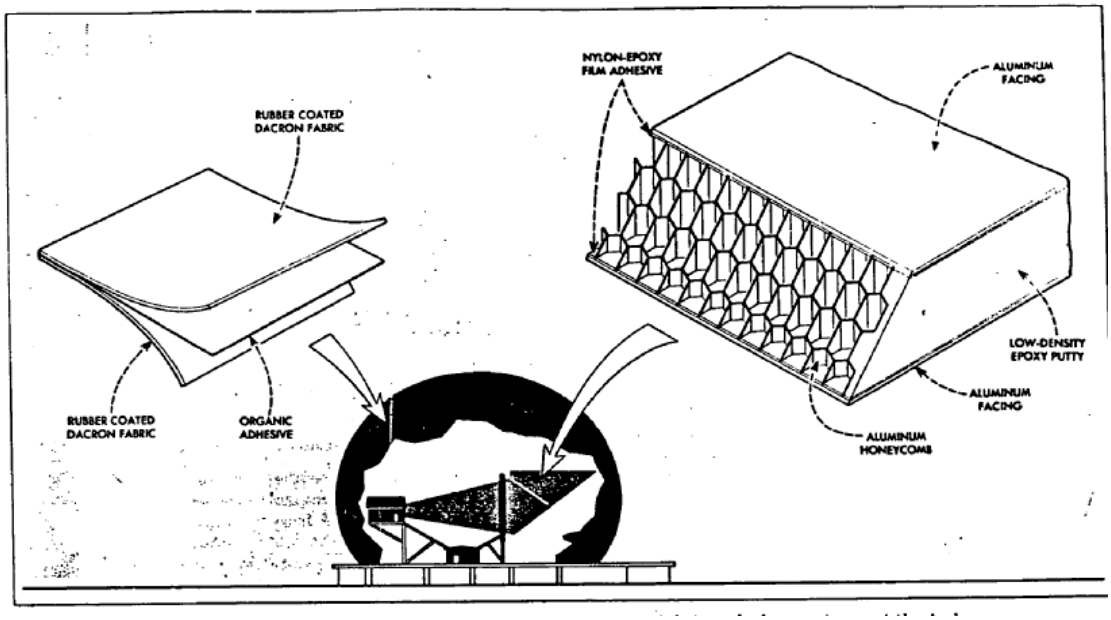

H01Q 15/145

{comprising a plurality of reflecting particles, e.g. radar chaff (missiles of the signal type provided with means for disseminating radar-reflecting chaff F42B 12/70)}

Definition statement

This place covers:

Consists of thousands of fine wire clippings, paper backed metal foils or carbon fibers; the chaff acts as dipoles that reflect a wide range of radar frequencies.

Illustrative example of subject-matter classified in this group:

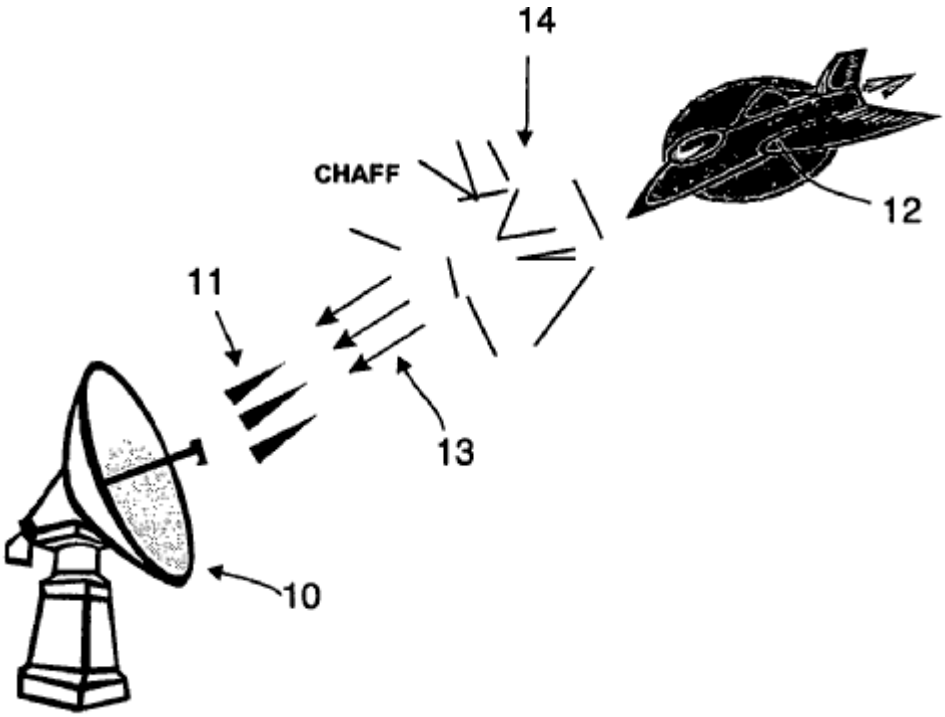

References

Limiting references

This place does not cover:

missiles of the signal type provided with means for disseminating radar-reflecting chaff	F42B 12/70

H01Q 15/147

{provided with means for controlling or monitoring the shape of the reflecting surface (for scanning H01Q 3/01; aerials or aerial systems providing multiple beamwidths H01Q 25/002)}

Definition statement

This place covers:

Shaped reflector, reconfigurable, reflector surface control, deformable reflector surface; zoned or stepped reflector.

Illustrative example of subject-matter classified in this group:

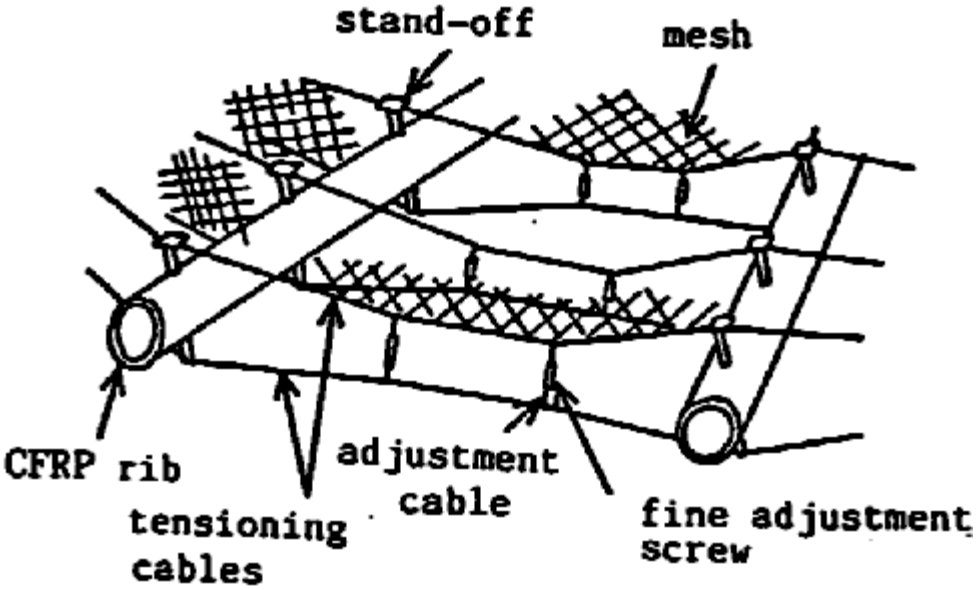

(a) composition of surface

References

Limiting references

This place does not cover:

for scanning	H01Q 3/01
aerials or aerial systems providing multiple beamwidths	H01Q 25/002

H01Q 15/148

{with means for varying the reflecting properties (H01Q 15/147 takes precedence)}

Definition statement

This place covers:

For example a reflect-array where the individual elements are subject to weighting in amplitude and phase.

Illustrative example of subject-matter classified in this group:

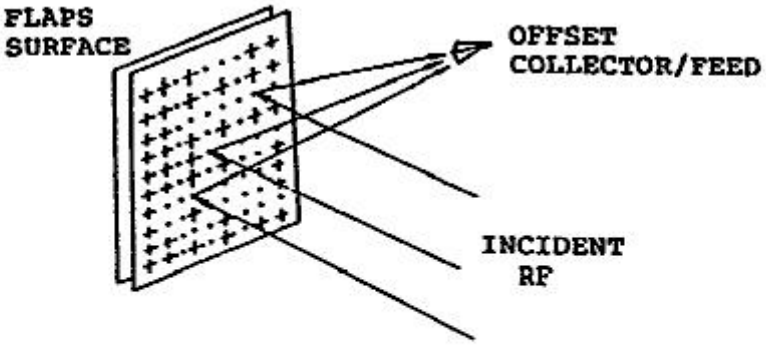

Figure 4
Flat Collimating Reflector
With Offset Feed

References

Limiting references

This place does not cover:

with means for varying the reflecting properties	H01Q 15/147

H01Q 15/16

Curved in two dimensions, e.g. paraboloidal

Definition statement

This place covers:

Paraboloidal, hyperboloidal, ellipsoidal.

Illustrative example of subject-matter classified in this group:

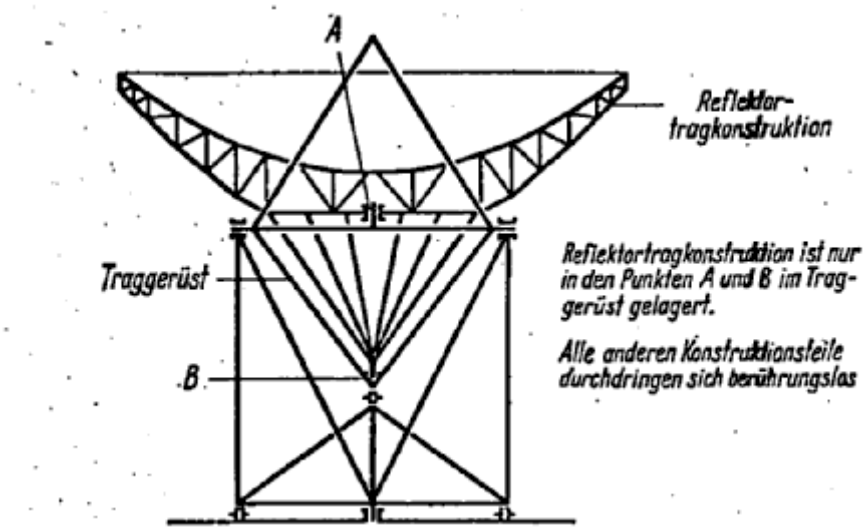

H01Q 15/161

{Collapsible reflectors}

Definition statement

This place covers:

For example using separate panels and hinges.

Illustrative example of subject-matter classified in this group:

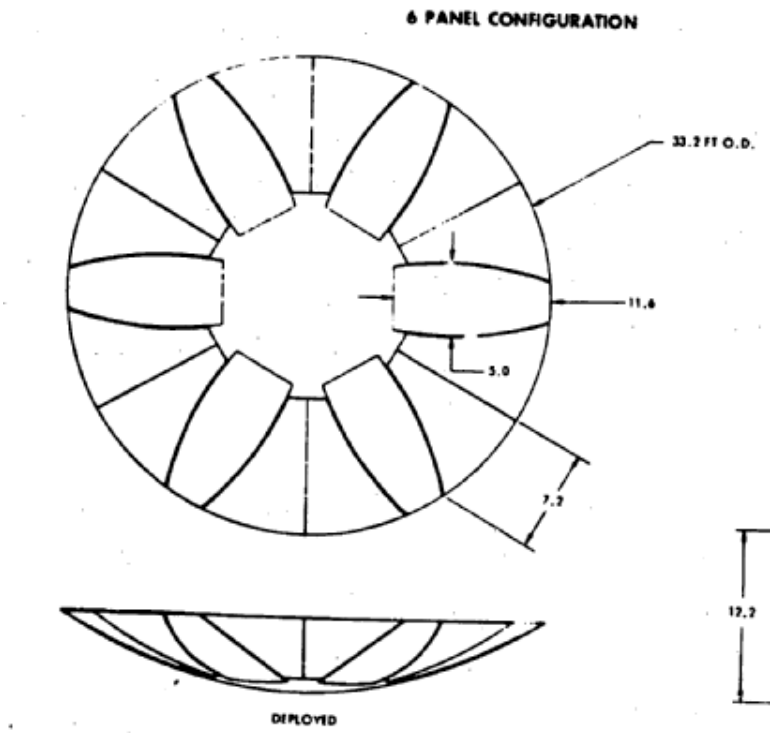

References

Informative references

Attention is drawn to the following places, which may be of interest for search:

See also B64G 1/44, B64G 1/66.

Synonyms and Keywords

In patent documents the following words are often used:

Unfurlable/ furlable; deployable; foldable; erectable, fold/unfold.

H01Q 15/162

{composed of a plurality of rigid panels}

Definition statement

This place covers:

Illustrative example of subject-matter classified in this group:

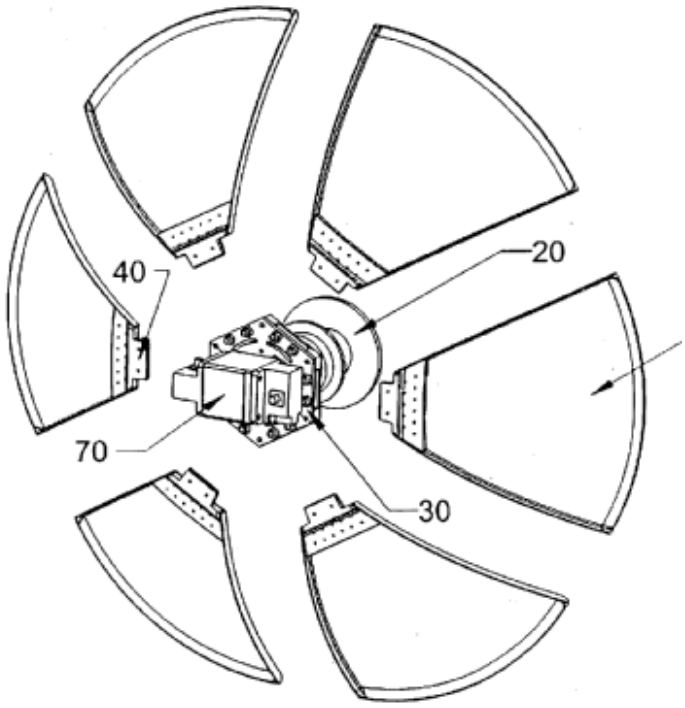

H01Q 15/163

{inflatable}

Definition statement

This place covers:

Normally an inflatable carrier is used, which ruggedizes, e.g. vulcanisation in outer space.

Illustrative example of subject-matter classified in this group:

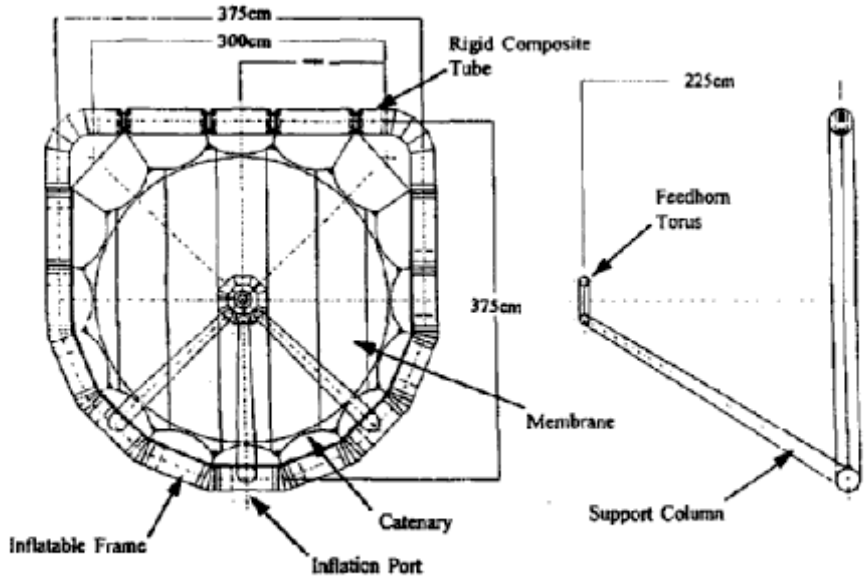

Fig. 4. Configuration of the Ka-band 3-m inflatable microstrip reflactarray

H01Q 15/165

{composed of a plurality of rigid panels (collapsible H01Q 15/161)}

Definition statement

This place covers:

For example earth station antenna need to be made with panels, as otherwise they are too big.

Illustrative example of subject-matter classified in this group:

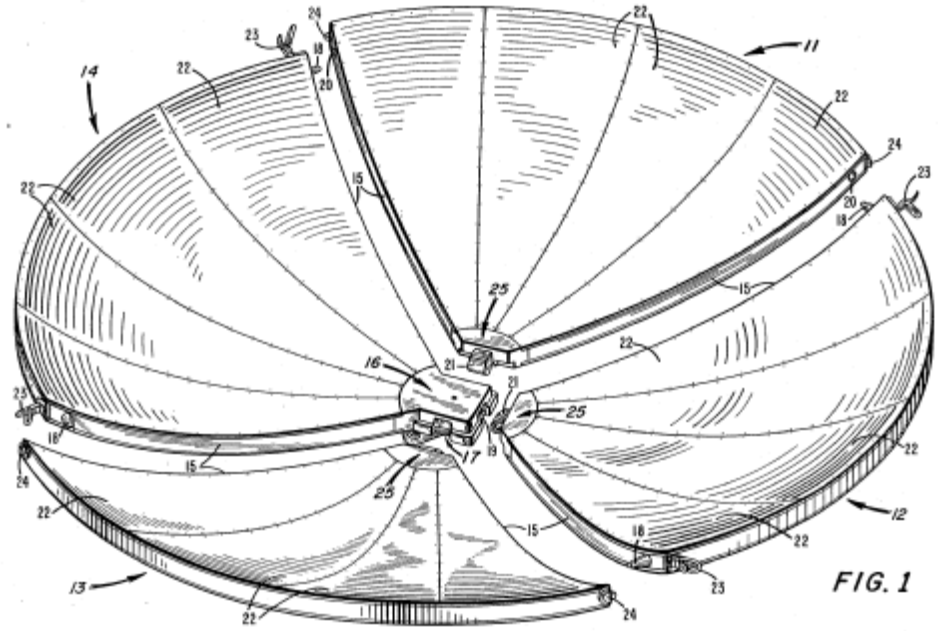

References

Limiting references

This place does not cover:

composed of a plurality of rigid panels	H01Q 15/161

H01Q 15/166

{sector shaped}

Definition statement

This place covers:

Illustrative example of subject-matter classified in this group:

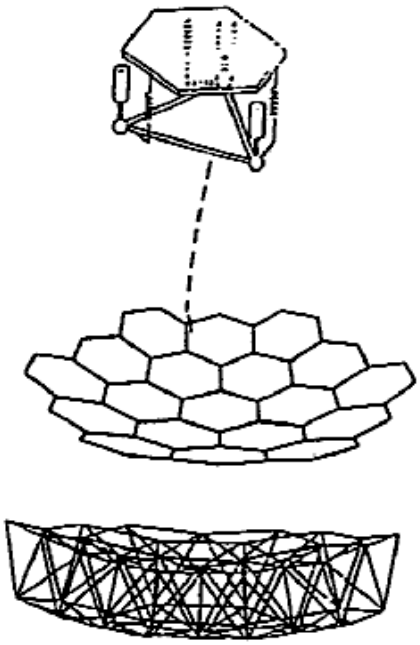

Figure 1. Two-Ring PSR

H01Q 15/167

{comprising a gap between adjacent panels or group of panels, e.g. stepped reflectors}

Definition statement

This place covers:

The gap causes scattering, and this needs to be prevented; normally conducting tape is used to cover the gap.

Illustrative example of subject-matter classified in this group:

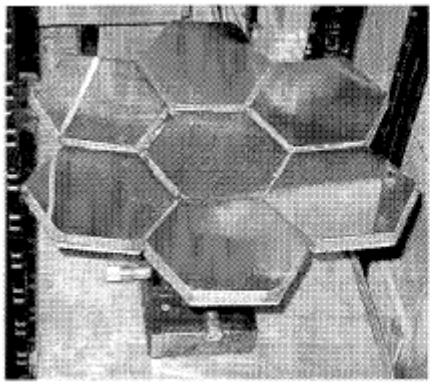

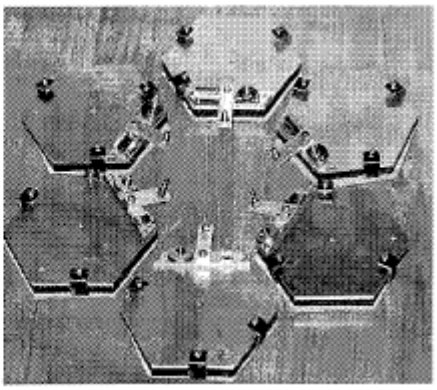

H01Q 15/168

{Mesh reflectors mounted on a non-collapsible frame}

Definition statement

This place covers:

Metallic mesh as a fabric with a supporting structure, e.g. truss structure shaped by a cable network: umbrella reflector.

Illustrative example of subject-matter classified in this group:

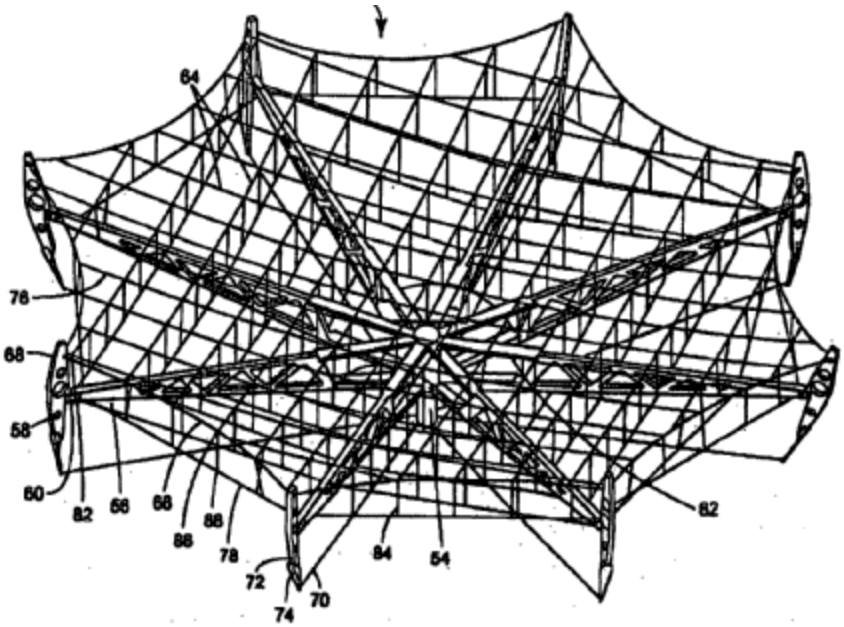

Synonyms and Keywords

In patent documents, the following words/expressions are often used as synonyms:

- "mesh net", "pliant metal gauze", "cloth-like material" and "pliant reflective material"

H01Q 15/18

comprising plurality of mutually inclined plane surfaces, e.g. corner reflector {(H01Q 15/16 takes precedence)}

Definition statement

This place covers:

A reflecting object consisting of two or three mutually intersecting conducting flat surfaces.

Type of a retroreflector (large echoes); used as emergency signalling device; passive marker; linear polarisation rest unchanged but the sense of circular polarisation is changed after reflection.

Also used as a reference target for radar calibration.

Illustrative example of subject-matter classified in this group:

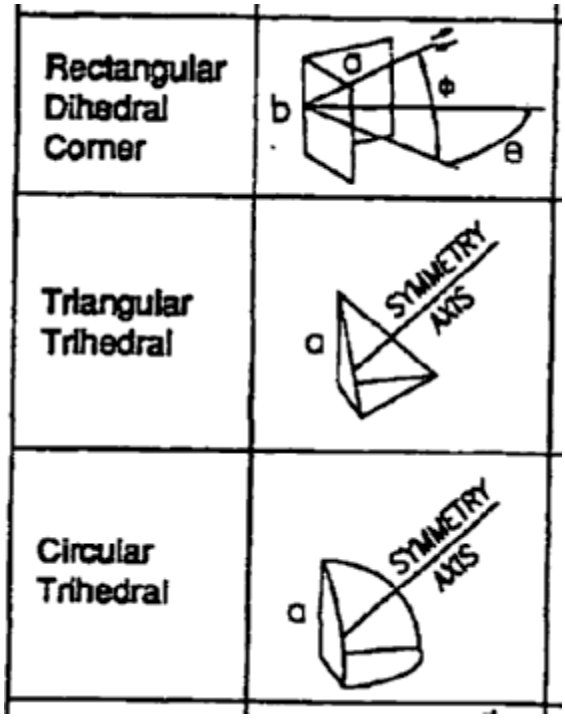

References

Limiting references

This place does not cover:

comprising plurality of mutually inclined plane surfaces, e.g. corner reflector	H01Q 15/16

H01Q 15/20

Collapsible reflectors

Definition statement

This place covers:

For example inflatable corner reflector.

Illustrative example of subject-matter classified in this group:

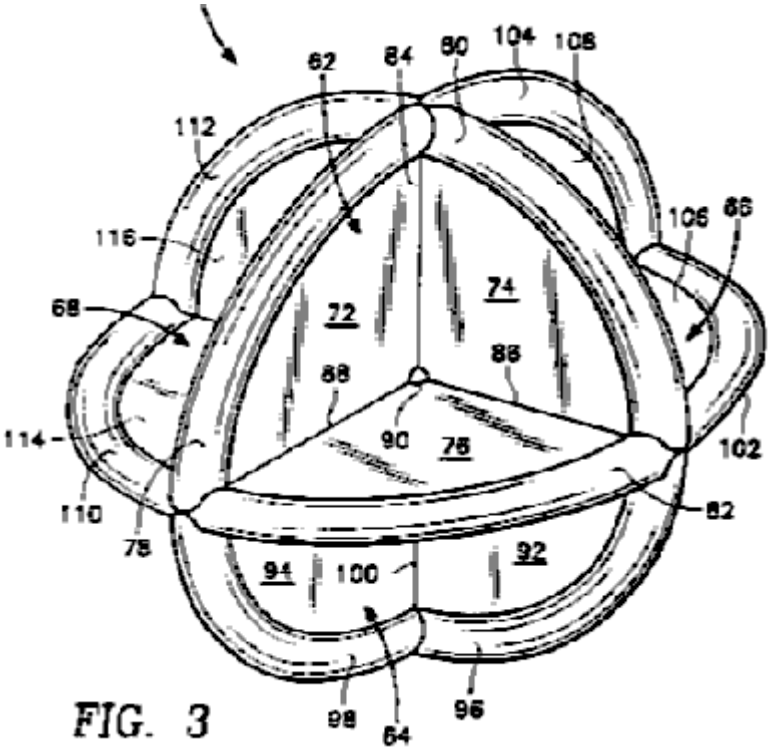

FIG. 3

H01Q 15/22

functioning also as polarisation filter {(in combination with polarising devices H01Q 15/24)}

Definition statement

This place covers:

Additional function as a polarisation sensitive reflector.

For example; double gridded reflector.

Illustrative example of subject-matter classified in this group:

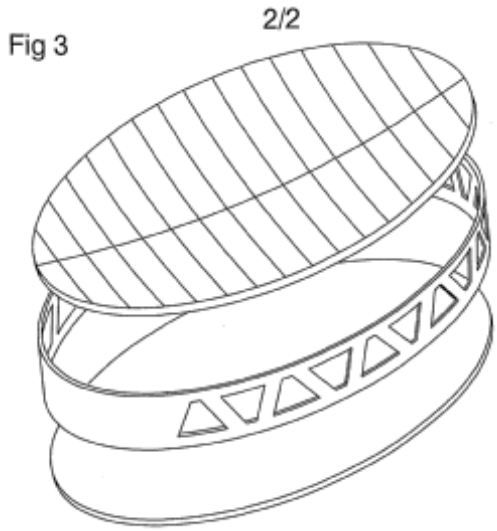

References

Limiting references

This place does not cover:

in combination with polarising devices	H01Q 15/24

Glossary of terms

In this place, the following terms or expressions are used with the meaning indicated:

PSS	Polarisation Sensitive Surface

H01Q 15/23

Combinations of reflecting surfaces with refracting or diffracting devices

Definition statement

This place covers:

For example: lens reflector: (part of) a lens mounted on a reflecting surface.

Illustrative example of subject-matter classified in this group:

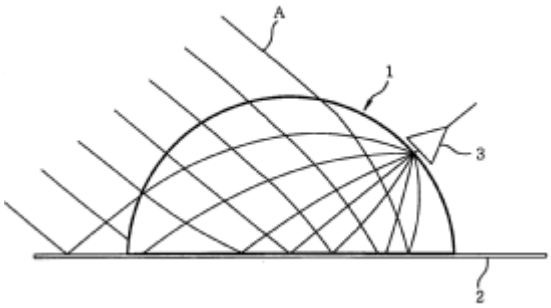

H01Q 15/24

Polarising devices; Polarisation filters (devices functioning simultaneously both as polarisation filters and as refracting or diffracting devices or as reflectors H01Q 15/12, H01Q 15/22)

Definition statement

This place covers:

For converting from one into another polarisation, e.g. meanderline polariser.

Illustrative example of subject-matter classified in this group:

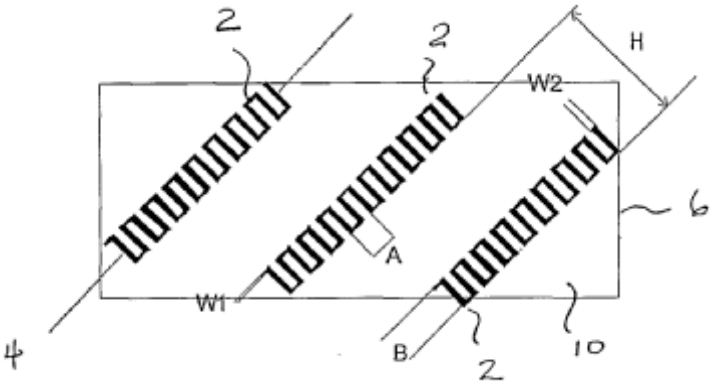

References

Limiting references

This place does not cover:

devices functioning simultaneously both as polarisation filters and as refracting or diffracting devices or as reflectors	H01Q 15/12, H01Q 15/22

Synonyms and Keywords

In patent documents, the following words/expressions are often used as synonyms:

- "polarizer", "polarisator", "polarisation transformer" and "polarisation converter"

H01Q 15/242

{Polarisation converters}

Definition statement

This place covers:

For transforming one polarisation into another one (and back): reciprocity.

Illustrative example of subject-matter classified in this group:

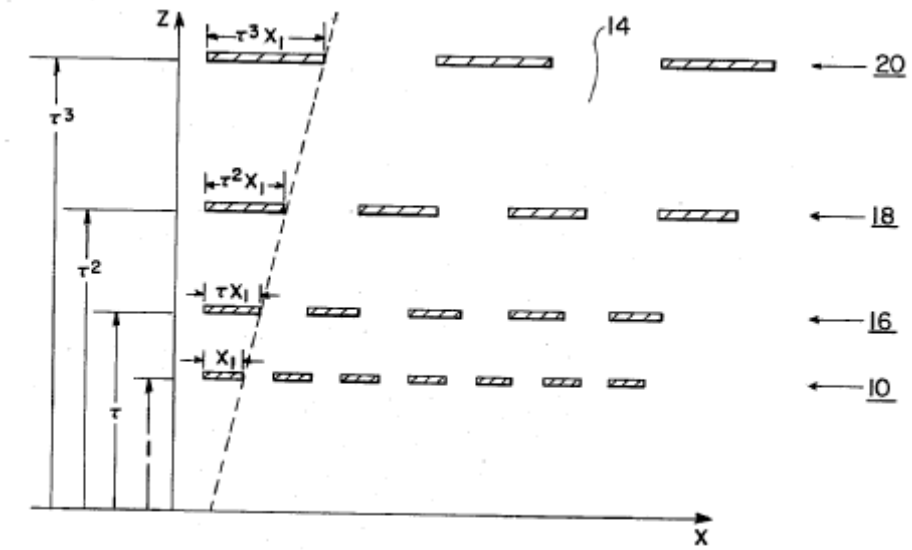

FIG. 3

Synonyms and Keywords

In patent documents, the following words/expressions are often used as synonyms:

- "polarizer", "polarisator", "polarisation transformer" and "polarisation converter"

H01Q 15/244

{converting a linear polarised wave into a circular polarised wave (guided wave H01P 1/17)}

Definition statement

This place covers:

For example: meanderline converters, or dielectric quarter wave plate inside waveguide, under 45 degrees.

Illustrative example of subject-matter classified in this group:

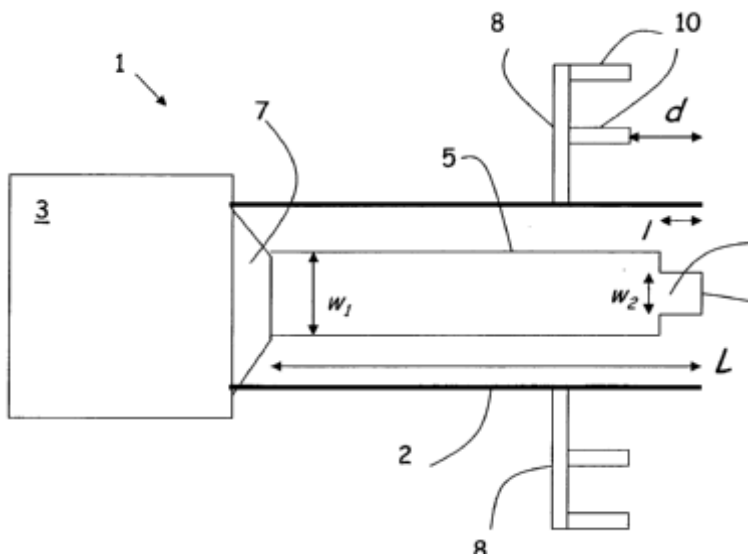

References

Limiting references

This place does not cover:

guided wave	H01P 1/17

H01Q 15/246

{rotating the plane of polarisation of a linear polarised wave (guided wave H01P 1/165)}

Definition statement

This place covers:

For example: polarisation rotator, Faraday rotator.

Illustrative example of subject-matter classified in this group:

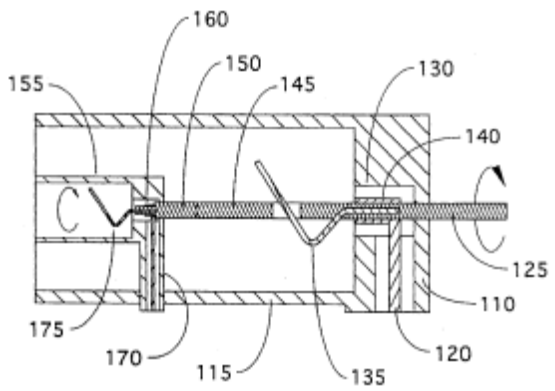

References

Limiting references

This place does not cover:

guided wave	H01P 1/165

H01Q 15/248

{using a reflecting surface, e.g. twist reflector (combination with a polarisation filter in dual reflector antennas H01Q 19/195)}

Definition statement

This place covers:

A polarisation sensitive device consisting of unidirectional planar gratings which rotate the state of polarisation.

Illustrative examples of subject-matter classified in this group:

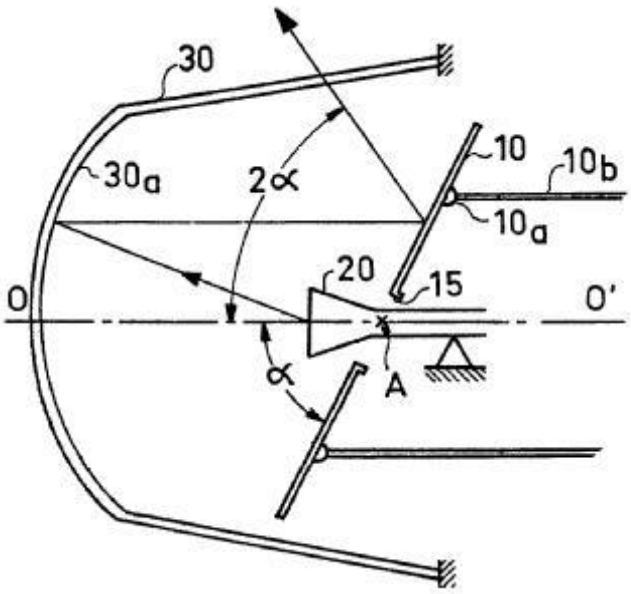

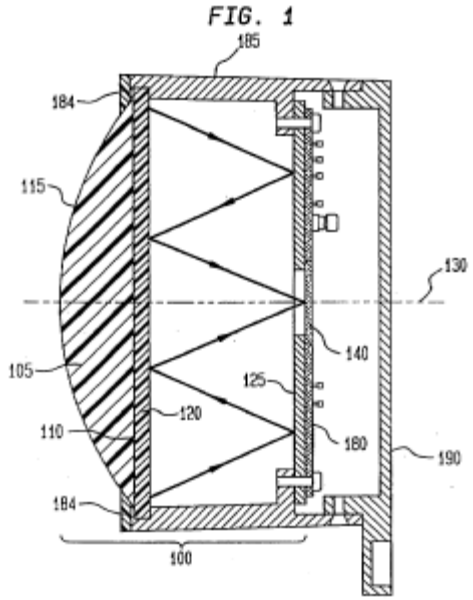

References

Limiting references

This place does not cover:

combination with a polarisation filter in dual reflector antennas	H01Q 19/195

H01Q 17/00

Devices for absorbing waves radiated from an aerial; Combinations of such devices with active aerial elements or systems {(anechoic chambers G01R 29/105)}

Definition statement

This place covers:

There are absorptive and reflective absorbers. In the absorptive absorbers RF energy is transferred into heat, whereas in the reflective absorbers the incident wave directs the RF energy away from the subject to be protected.

Illustrative example of subject-matter classified in this group:

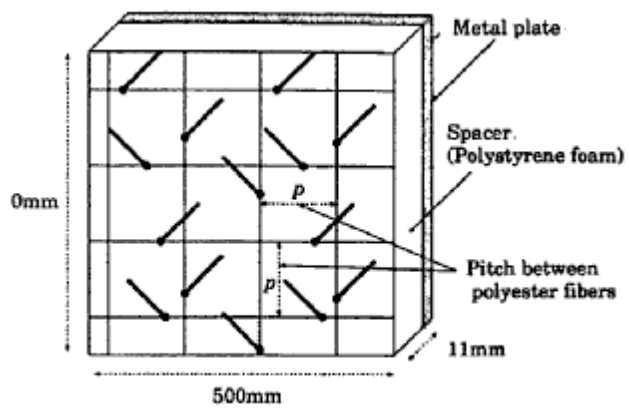

Relationships with other classification places

Anechoic chambers are in G01R 29/105.

H01Q 17/001

{for modifying the directional characteristic of an aerial}

Definition statement

This place covers:

For example rim loading for a reflector antenna to lower sidelobes.

Illustrative example of subject-matter classified in this group:

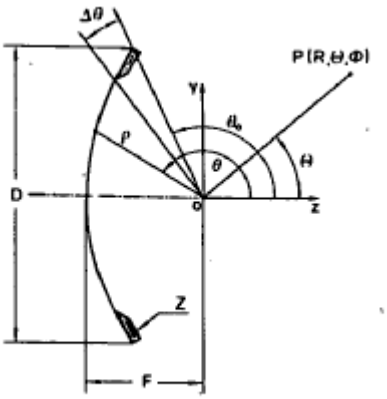

Fig. 1. Parabolic dish geometry.

H01Q 17/002

{using short elongated elements as dissipative material, e.g. metallic threads or flake-like particles}

Definition statement

This place covers:

For example chiral type material.

Illustrative example of subject-matter classified in this group:

Fig. 1. Basic wire structures. Two chiral cranks of opposite handedness (enantiomorphs), a non-chiral staple, and a non-chiral crank.

H01Q 17/004

{using non-directional dissipative particles, e.g. ferrite powders (H01Q 17/005 takes precedence; flake-like H01Q 17/002)}

Definition statement

This place covers:

Focuses on the material properties in order to improve the losses.

Illustrative example of subject-matter classified in this group:

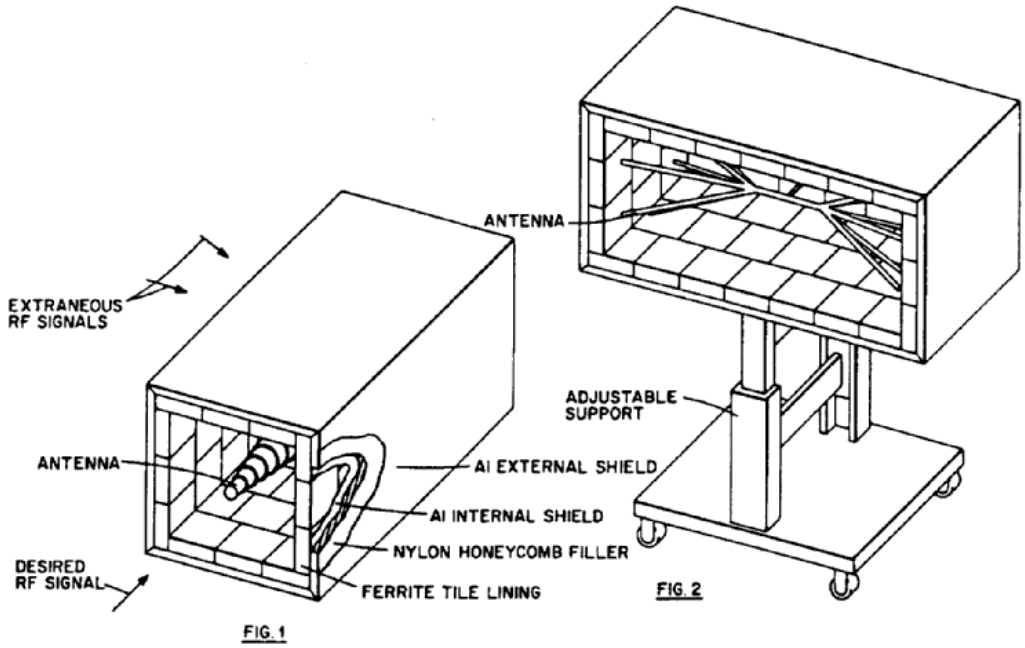

References

Limiting references

This place does not cover:

flake-like	H01Q 17/002
using non-directional dissipative particles, e.g. ferrite powders	H01Q 17/005

H01Q 17/005

{using woven or wound filaments; impregnated nets or clothes}

Definition statement

This place covers:

Also combination of optical camouflage, IR camouflage and RF absorbing material.

Illustrative example of subject-matter classified in this group:

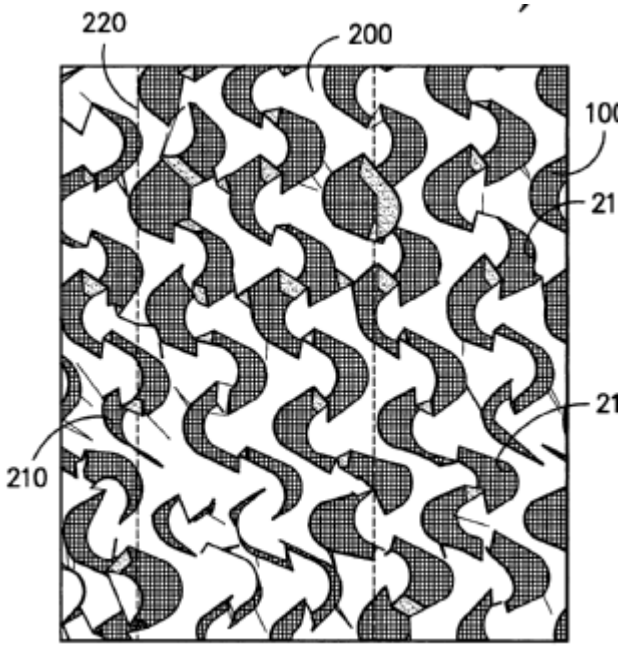

H01Q 17/007

{with means for controlling the absorption}

Definition statement

This place covers:

Typically one studies the effect of something, e.g. geometrical arrangement, chemical composition, on the properties of the absorber; largely experimental.

Illustrative example of subject-matter classified in this group:

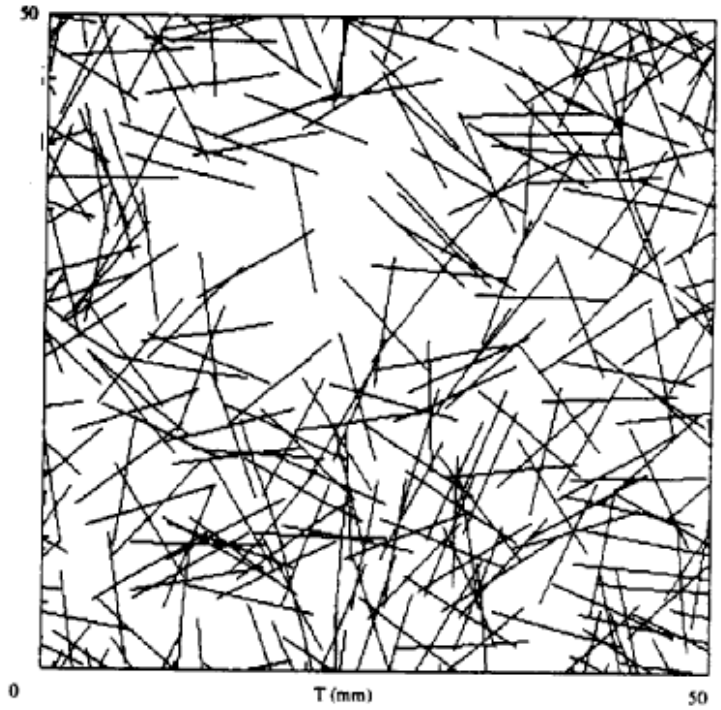

Fig. 2. Random distribution of sticks inside the pattern.

H01Q 17/008

{with a particular shape (H01Q 17/007 takes precedence)}

Definition statement

This place covers:

Focusing on the geometrical shapes of the absorbers, e.g. wedge, tile, pyramid, truncated pyramid.

Illustrative examples of subject-matter classified in this group:

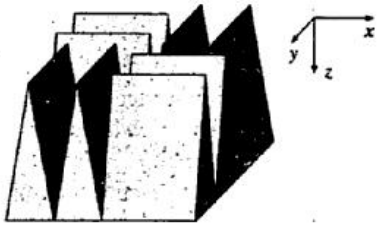

Fig. 2. Alternating wedge absorber.

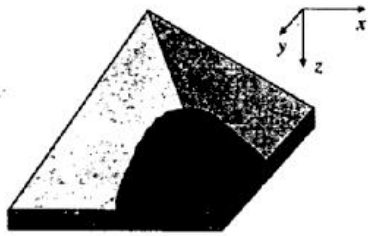

Fig. 3. Hollow pyramidal absorber.

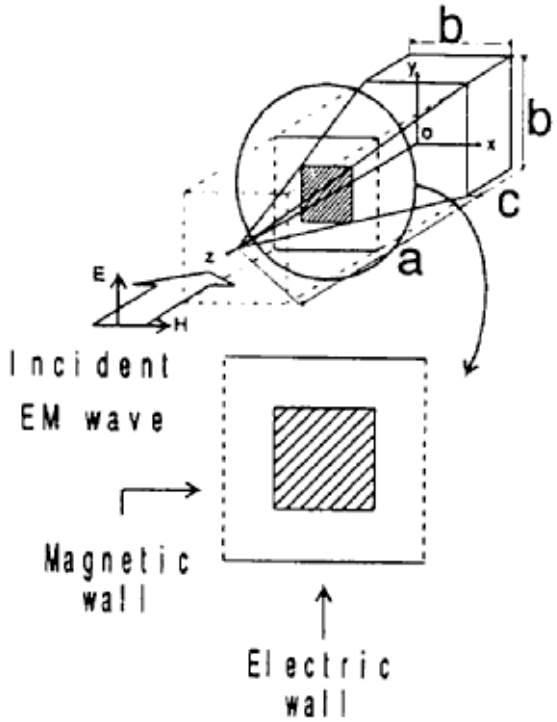

References

Limiting references

This place does not cover:

with a particular shape	H01Q 17/007

H01Q 19/00

Combinations of primary active aerial elements and units with secondary devices, e.g. with quasi-optical devices, for giving the aerial a desired directional characteristic {(combination of horns with slotted waveguide array H01Q 13/0233)}

Definition statement

This place covers:

As Lens antennas and Reflector antennas, i.e. a primary radiator with a lens or reflector as secondary radiators.

References

Limiting references

This place does not cover:

Combination of horns with slotted waveguide array	H01Q 13/0233

H01Q 19/005

{Patch antenna using one or more coplanar parasitic elements}

Definition statement

This place covers:

Parasitic element is a radiating element that is not connected to the feed lines of an antenna but affects the radiation pattern.

Only relates to patch antennas.

Illustrative examples of subject-matter classified in this group:

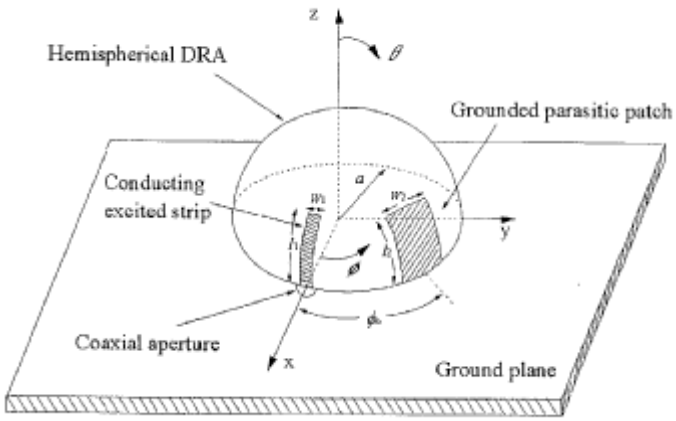

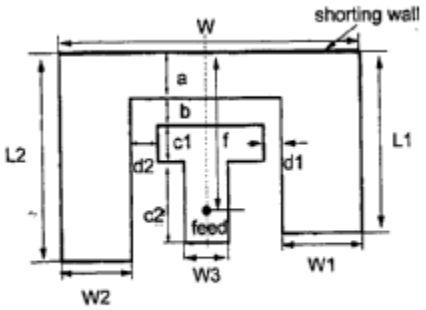

Fig. 1. Geometry of the antenna with $h = 11$ mm.

H01Q 19/02

Details {(fastening of an element on a boom H01Q 1/1228)}

Definition statement

This place covers:

Illustrative example of subject-matter classified in this group:

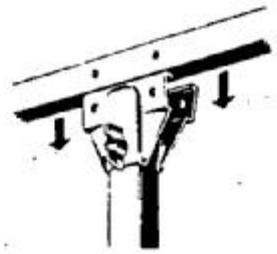

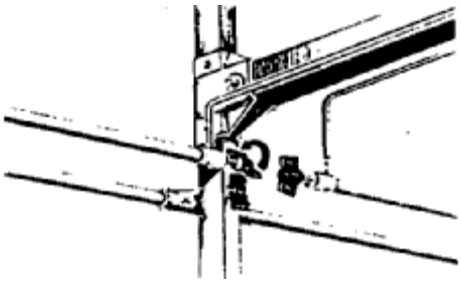

References

Limiting references

This place does not cover:

fastening of an element on a boom	H01Q 1/1228

Special rules of classification

Inactive.

H01Q 19/021

{Means for reducing undesirable effects}

Definition statement

This place covers:

Grating lobes, that is undesired sidelobes in the radiation pattern; e.g. edge scattering, scattering at struts, etc.

Illustrative example of subject-matter classified in this group:

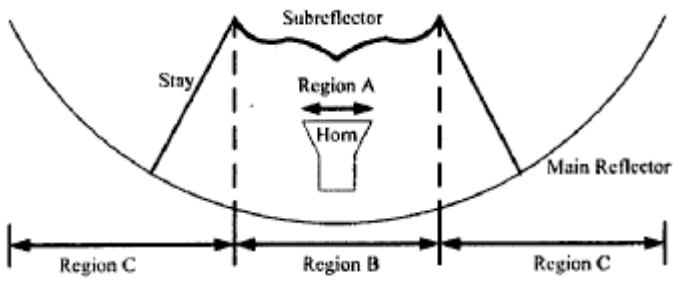

Fig. 4 Classification of the region on the reflector.

H01Q 19/022

{for reducing the edge scattering of reflectors}

Definition statement

This place covers:

Rim loading, rim shaping.

Illustrative example of subject-matter classified in this group:

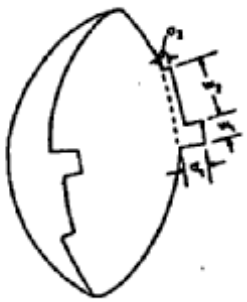

H01Q 19/023

{for reducing the scattering of mounting structures, e.g. of the struts}

Definition statement

This place covers:

Shaping of struts; covering of struts with absorbing material.

Illustrative example of subject-matter classified in this group:

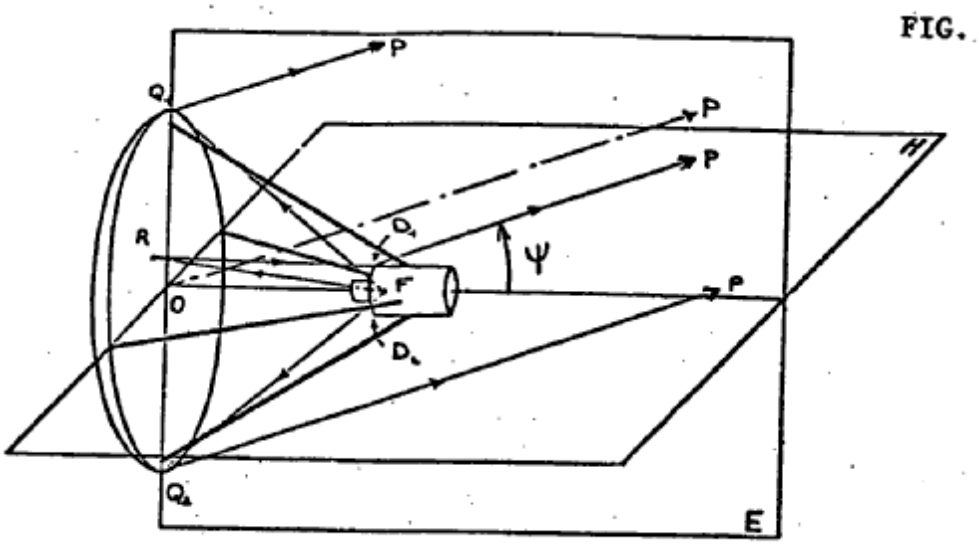

H01Q 19/025

{for optimizing the matching of the primary feed, e.g. vertex plates}

Definition statement

This place covers:

Changing the shape of (sub) reflectors that are responsible for backscattered energy that causes VSWR degradation.

Illustrative example of subject-matter classified in this group:

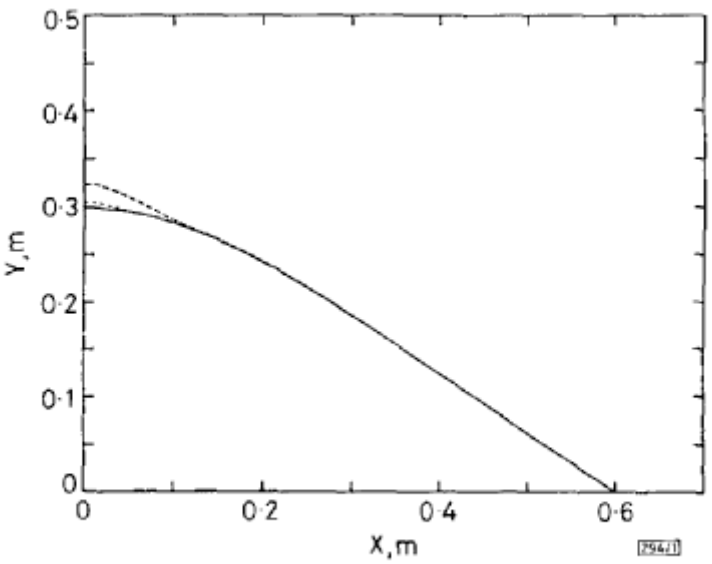

Fig. 1 *Subreflector profile with various matching cosine-squared shaped knobs*

H01Q 19/026

{for reducing the primary feed spill-over}

Definition statement

This place covers:

Changing the aperture illumination used for generating the secondary pattern.

In the transmit mode of a reflector antenna, the power from the feed that is not intercepted by the reflecting elements.

Illustrative example of subject-matter classified in this group:

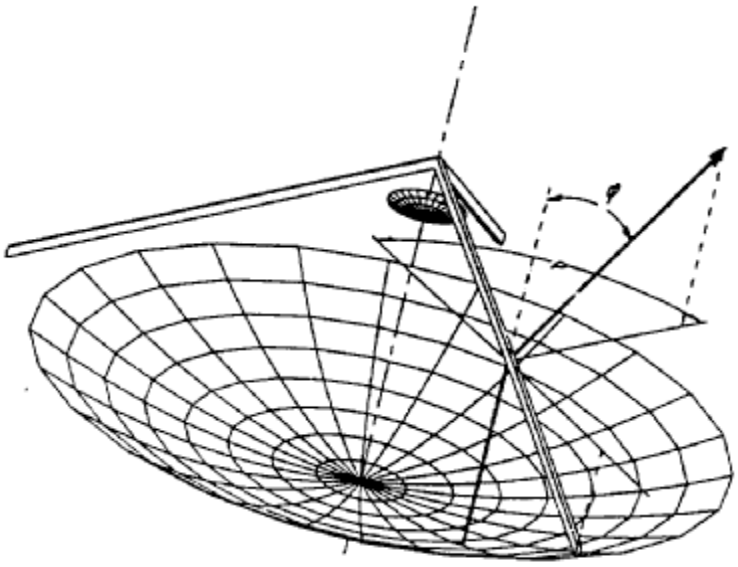

Fig. 4. Schematic view of the telescope showing all three support legs and the angles φ and ρ that describe the direction of a ray after reflection from a radiation baffle on the leg's underside.

H01Q 19/027

{for compensating or reducing aperture blockage (offset feeding H01Q 19/132, H01Q 19/192)}

Definition statement

This place covers:

A condition resulting from objects lying in the path of rays arriving at or departing from the aperture of an antenna.

The shadowing causes increase in sidelobe levels.

Illustrative example of subject-matter classified in this group:

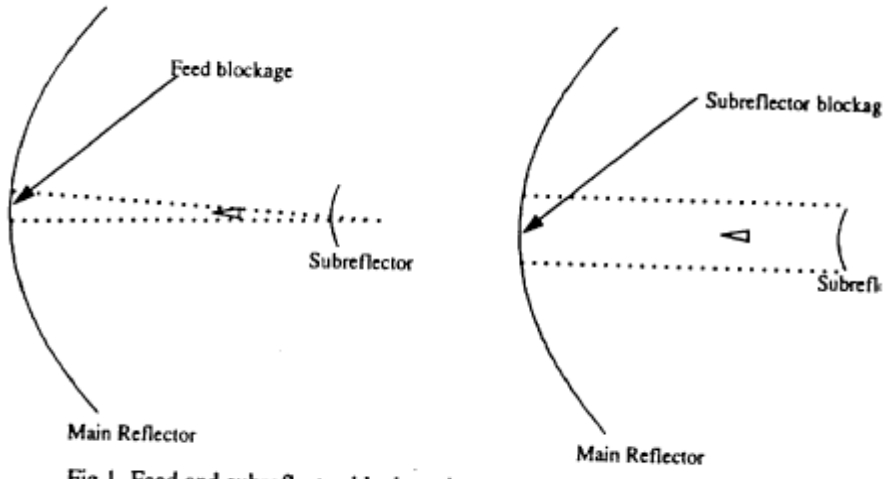

Fig 1. Feed and subreflector blockage in a symmetric dual reflector

References

Limiting references

This place does not cover:

offset feeding	H01Q 19/132, H01Q 19/192

H01Q 19/028

{for reducing the cross polarisation}

Definition statement

This place covers:

The polarisation orthogonal to a reference polarisation, that is co-polarisation; polarisation purity; cross-polarisation suppression.

Illustrative examples of subject-matter classified in this group:

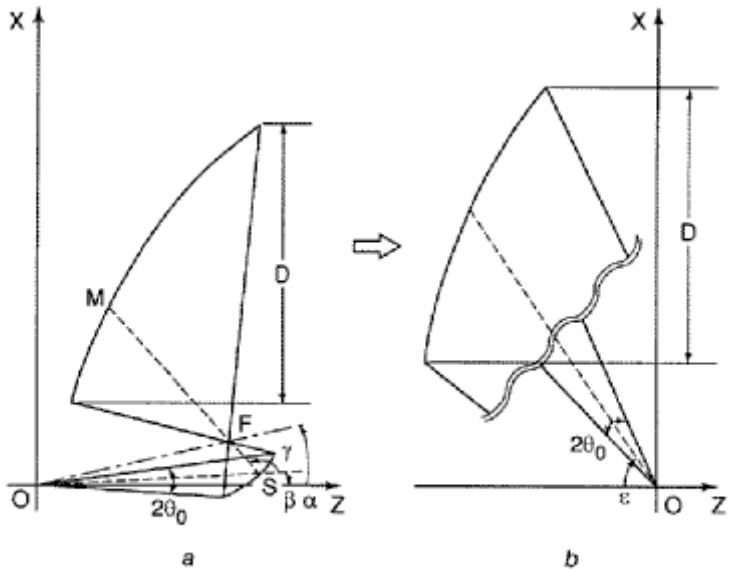

Fig.2 *Design parameters of reflectors of quadric surface of revolution*
a Dual reflector type antenna: offset Gregorian antenna
b Equivalent offset parabola

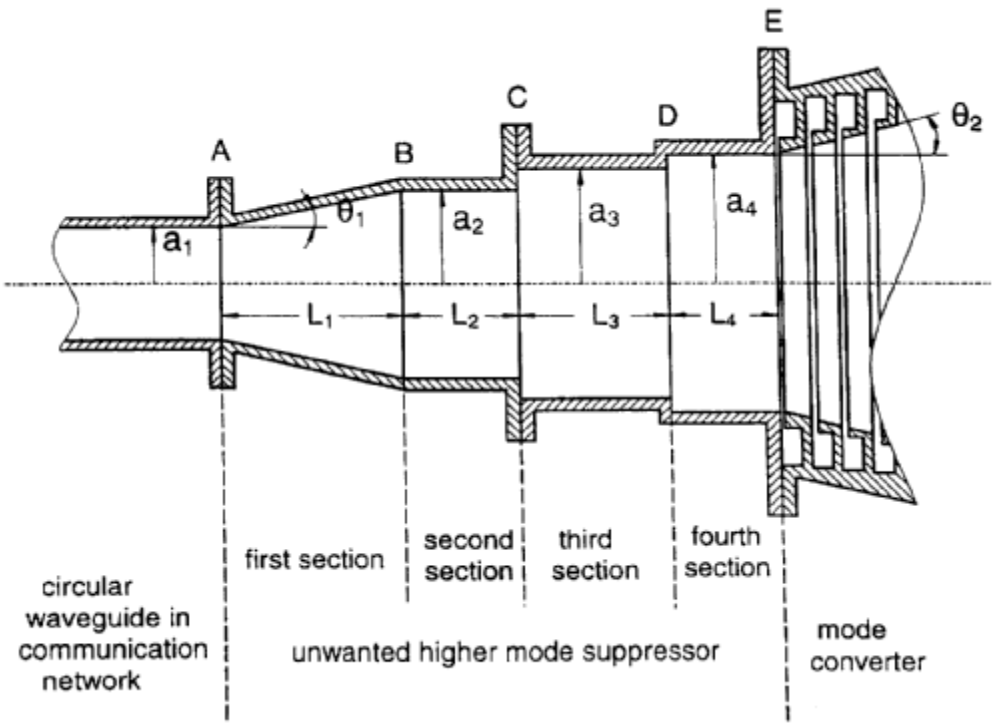

H01Q 19/04

Means for collapsing H-aerials or Yagi aerials

Definition statement

This place covers:

Mechanical details thereof.

Illustrative example of subject-matter classified in this group:

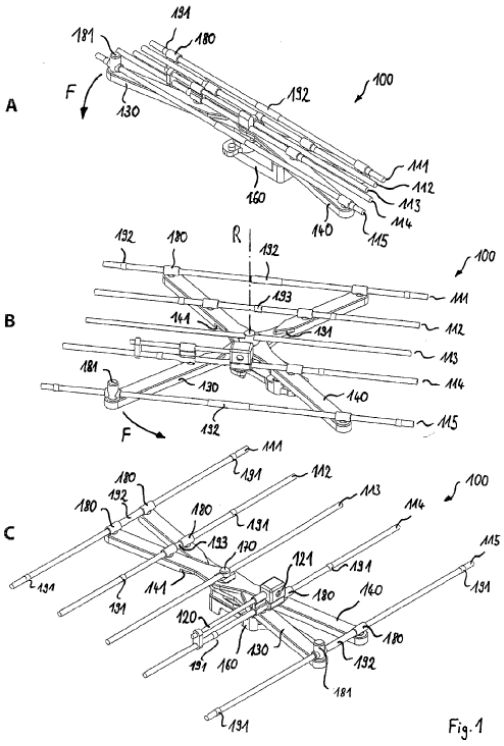

H01Q 19/06

using refracting or diffracting devices, e.g. lens {(radome H01Q 1/42)}

Definition statement

This place covers:

Lens antenna. An antenna consisting of an electromagnetic lens and a feed that illuminates it.

Illustrative example of subject-matter classified in this group:

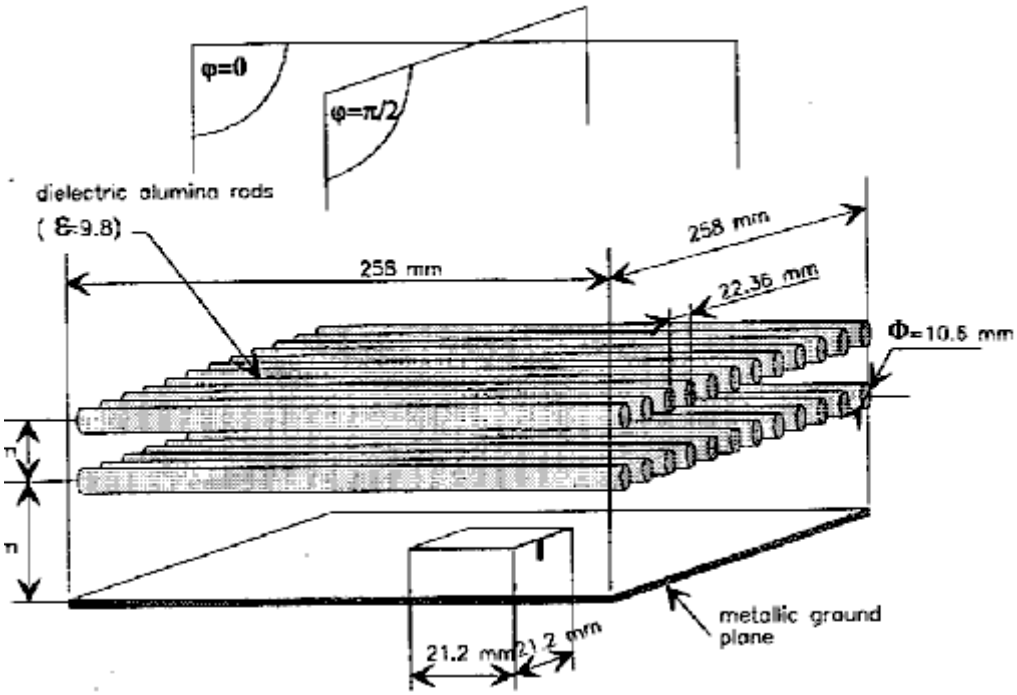

References

Limiting references

This place does not cover:

using refracting or diffracting devices, e.g. lens	H01Q 1/42

H01Q 19/062

{for focusing}

Definition statement

This place covers:

For transforming an incident wavefront into another wavefront, e.g. spherical into plane.

Illustrative examples of subject-matter classified in this group:

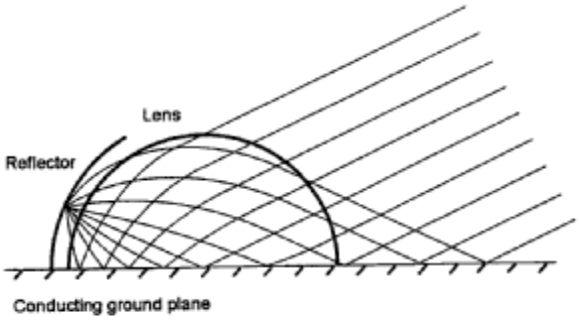

Figure 1. A ground-plane backed hemispherical Luneberg-lens reflector.

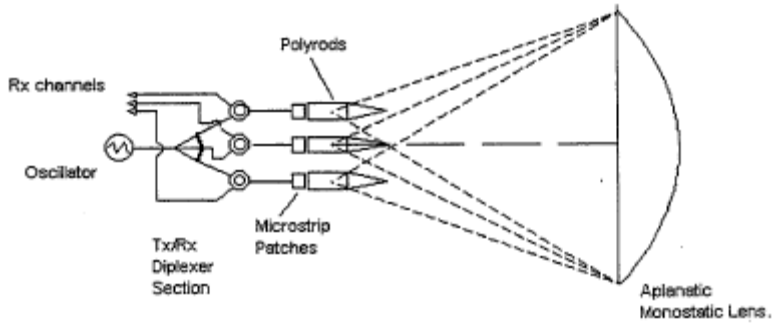

H01Q 19/065

{Zone plate type antennas}

Definition statement

This place covers:

Fresnel lens antenna. An antenna consisting of a feed and a lens, usually planar, that transmits the radiated power from the feed through the central zone and alternate Fresnel zones of the illuminating field on the lens.

Illustrative example of subject-matter classified in this group:

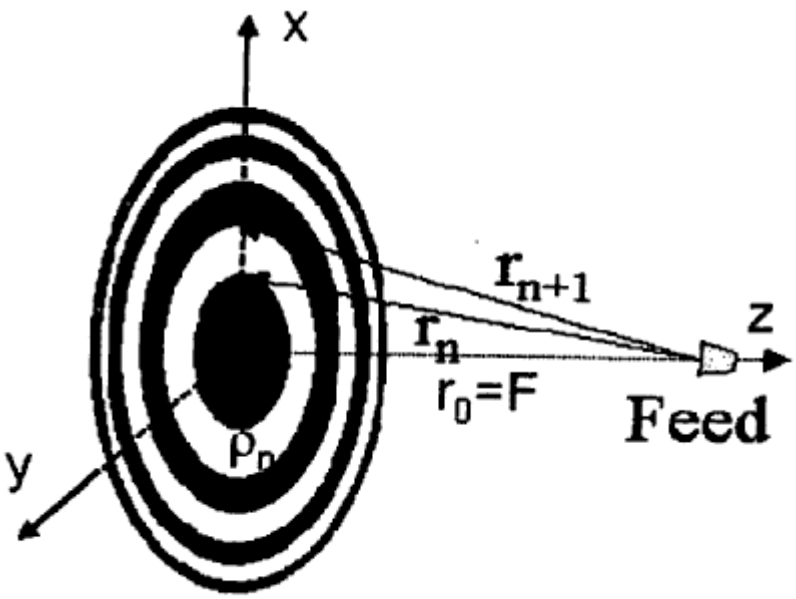

Figure 3. A three-dimensional view of a Fresnel antenna.

Synonyms and Keywords

Planar lens antenna; Fresnel zone plate antenna (FZP, FZPA).

H01Q 19/067

{using a hologram}

Definition statement

This place covers:

Quasi-optical wave of generating an antenna beam, based on constructive interference. Operates as kind of grating.

Illustrative example of subject-matter classified in this group:

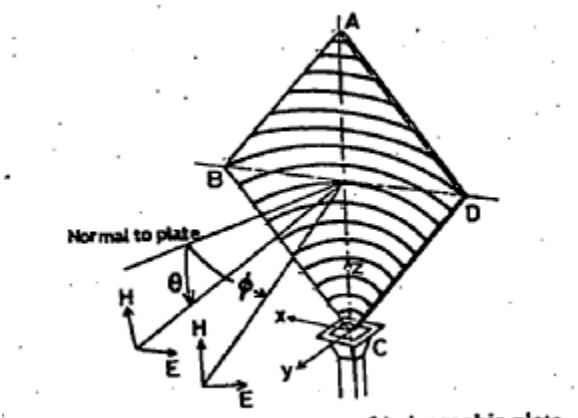

Fig. 1. Structure and geometry of holographic plate.

H01Q 19/08

for modifying the radiation pattern of a radiating horn in which it is located {(corrugated horns H01Q 13/0208; producing a circular polarisation H01Q 13/0241)}

Definition statement

This place covers:

For example: dielectrically filled horns.

Illustrative example of subject-matter classified in this group:

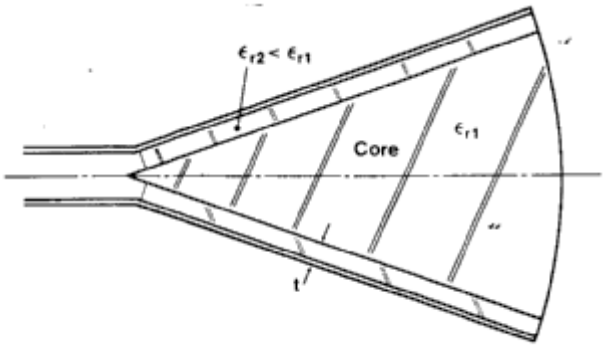

Fig. 1. Illustration of the new hybrid-mode horn antenna (the "dielectric core horn").

References

Limiting references

This place does not cover:

corrugated horns	H01Q 13/0208
producing a circular polarisation	H01Q 13/0241

H01Q 19/09

wherein the primary active element is coated with or embedded in a dielectric or magnetic material (protective material H01Q 1/40; with variable characteristics H01Q 3/44)

Definition statement

This place covers:

Coated/embedded monopole.

Illustrative examples of subject-matter classified in this group:

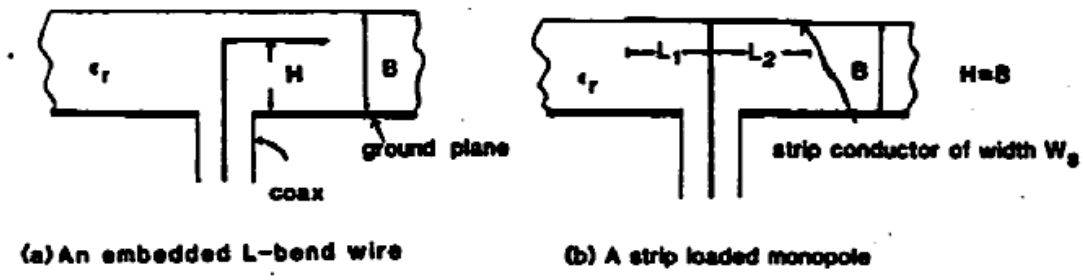

(a) An embedded L-bend wire (b) A strip loaded monopole

References

Limiting references

This place does not cover:

protective material	H01Q 1/40
with variable characteristics	H01Q 3/44

H01Q 19/10

using reflecting surfaces

Definition statement

This place covers:

An antenna consisting of one or more reflecting surfaces and a radiating (receiving) feed system.

Synonyms and Keywords

Reflector antenna, dish antenna.

H01Q 19/102

{wherein the surfaces are of convex toroïdal shape (biconical horns H01Q 13/04)}

Definition statement

This place covers:

A reflector formed by rotating s segment of plane curve about a nonintersecting coplanar line.

Example: torus antenna.

Illustrative example of subject-matter classified in this group:

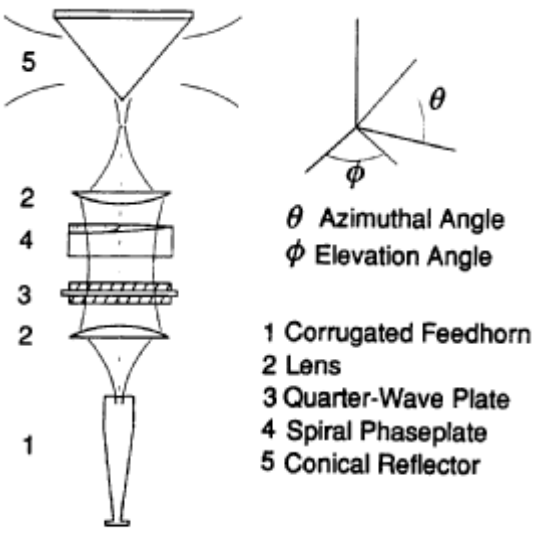

Fig. 1 : Layout of antenna components.

References

Limiting references

This place does not cover:

biconical horns	H01Q 13/04

H01Q 19/104

{using a substantially flat reflector for deflecting the radiated beam, e.g. periscopic antennas (periscopic fed Cassegrain antennas H01Q 19/191; passive relays H04B 7/145)}

Definition statement

This place covers:

An antenna consisting of a very directive feed located close to ground level and oriented so that its beam illuminates an elevated reflector that is oriented so as to produce a horizontal beam.

Illustrative example of subject-matter classified in this group:

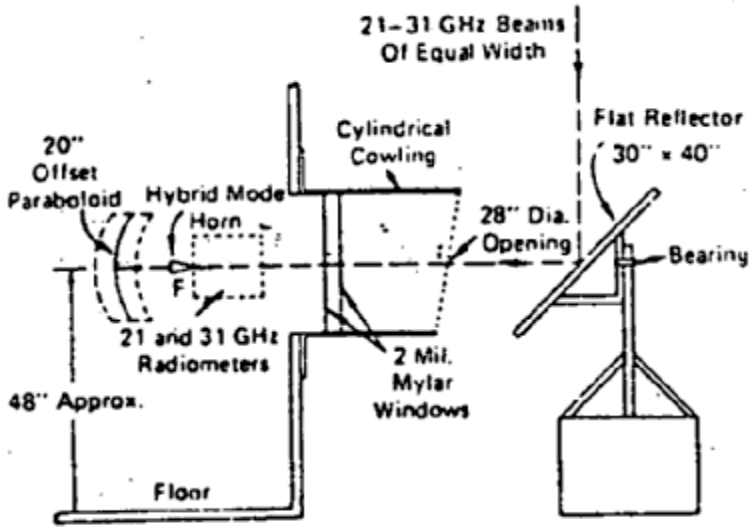

Fig. 1. Equal-beamwidth antenna (side view) shown in all-weather configuration for remotely sensing the atmosphere. Flat is rotatable on a bearing for scanning the beam in elevation.

References

Limiting references

This place does not cover:

periscopic fed Cassegrain antennas	H01Q 19/191
passive relays	H04B 7/145

H01Q 19/106

{using two or more intersecting plane surfaces, e.g. corner reflector antennas}

Definition statement

This place covers:

Corner reflector antenna, that is an antenna consisting of a feed and a corner reflector.

Illustrative example of subject-matter classified in this group:

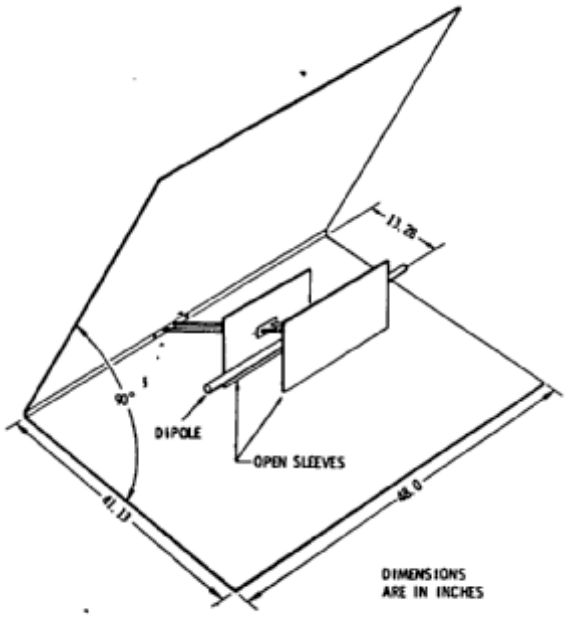

Fig. 1. Corner reflector dimensions.

H01Q 19/108

{Combination of a dipole with a plane reflecting surface (H01Q 19/106 takes precedence; strip line H01Q 9/065)}

Definition statement

This place covers:

Any dipole with any planar reflecting surface.

Illustrative example of subject-matter classified in this group:

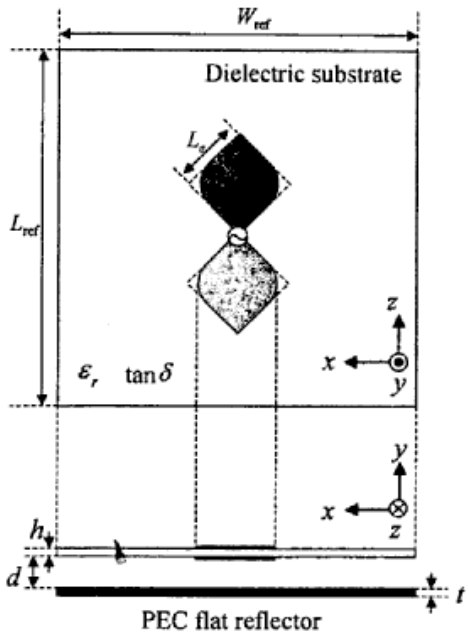

Fig. 1 Antenna geometry and coordinate system when using delta-gap feed.

References

Limiting references

This place does not cover:

takes precedence; strip line	H01Q 9/065
Combination of a dipole with a plane reflecting surface	H01Q 19/106

H01Q 19/12

wherein the surfaces are concave (H01Q 19/18 takes precedence)

Definition statement

This place covers:

A feed with a dish.

Illustrative example of subject-matter classified in this group:

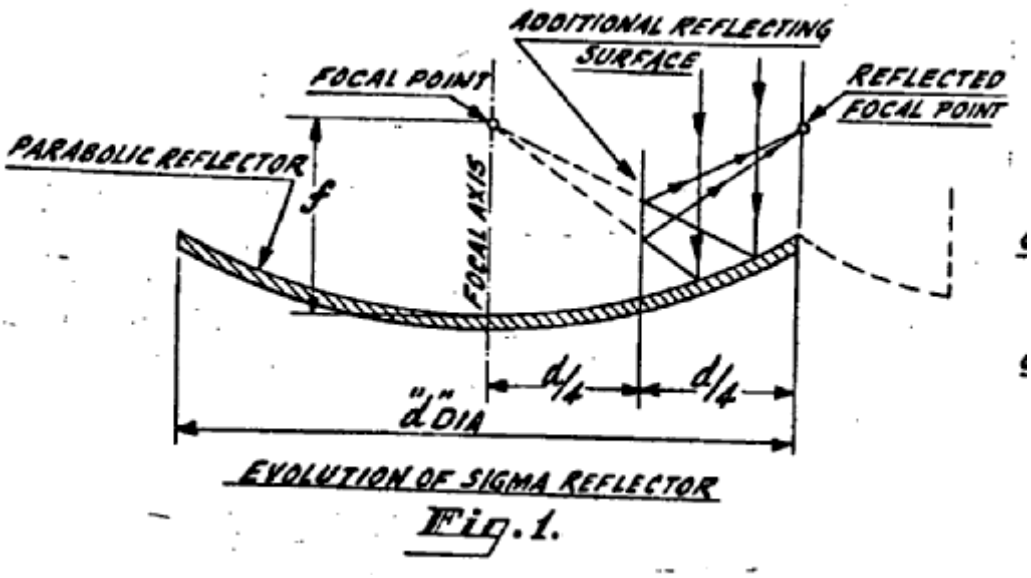

References

Limiting references

This place does not cover:

wherein the surfaces are concave	H01Q 19/18

Synonyms and Keywords

In patent documents the following words are often used:

Parabolic, paraboloidal, paraboloid.

H01Q 19/13

the primary radiating source being a single radiating element, e.g. a dipole, a slot, a waveguide termination (H01Q 19/15 takes precedence)

Definition statement

This place covers:

Illustrative example of subject-matter classified in this group:

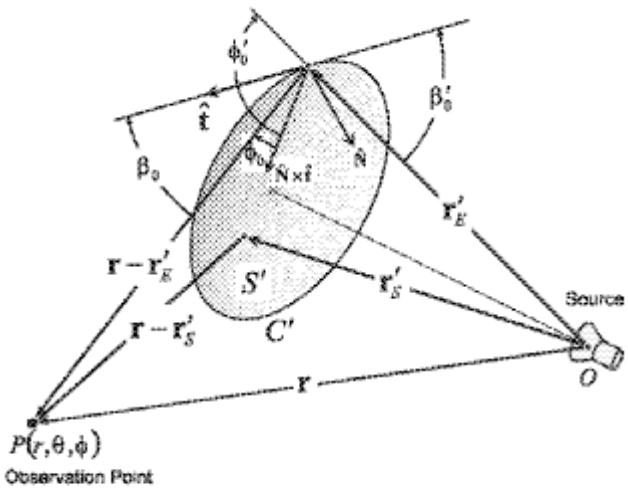

Fig. 1. Geometry for a reflector surface with the vectors and angles employed in the TDPO + FWCs formulation.

References

Limiting references

This place does not cover:

the primary radiating source being a single radiating element, e.g. a dipole, a slot, a waveguide termination	H01Q 19/15

Synonyms and Keywords

In patent documents the following words are often used:

Prime focus feed; center-feed, centre-fed; front feed; front-fed.

H01Q 19/132

{Horn reflector antennas; Off-set feeding}

Definition statement

This place covers:

An antenna consisting of a portion of a paraboloidal reflector fed with an offset horn that physically intersects the reflector, part of the wall of the horn being removed to form the antenna aperture.

The horn is usually either pyramidal or conical, with an axis perpendicular to that of the paraboloid.

Advantage: aperture blockage by the feed is reduced.

Illustrative example of subject-matter classified in this group:

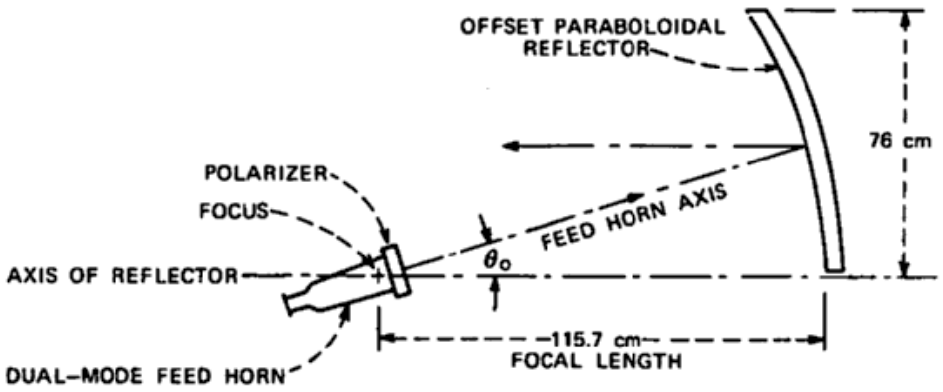

(c)

Fig. 2—(a) Cross-sectional view of the dual-mode feed-horn design used for the offset launcher of Fig. 1. (b) Profile of measuring range. (c) Launcher schematic.

H01Q 19/134

{Rear-feeds; Splash plate feeds}

Definition statement

This place covers:

Splash plate feeds can have various profiles, optimised for VSWR.

Illustrative example of subject-matter classified in this group:

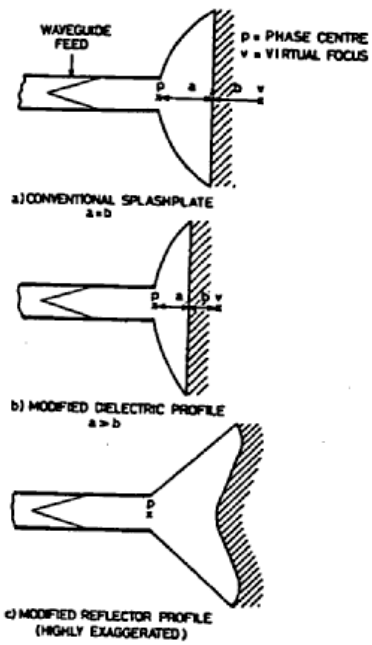

Figure 1 VARIOUS SPLASHPLATE DESIGNS

H01Q 19/136

{cross-polarised}

Definition statement

This place covers:

Should be interpreted as dual-polarised.

Illustrative example of subject-matter classified in this group:

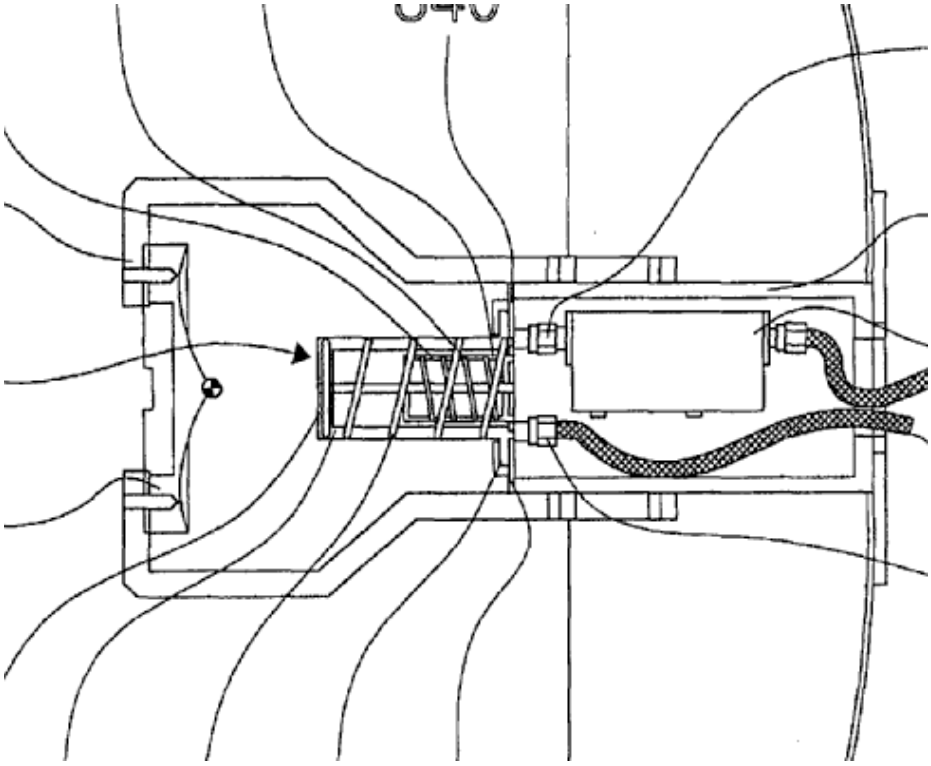

H01Q 19/138

{Parallel-plate feeds, e.g. pill-box, cheese aerials}

Definition statement

This place covers:

Cheese: a reflector antenna having a cylindrical reflector enclosed by two parallel conducting plates perpendicular to the cylinder, spaced more than one wavelength apart.

Contrast with Pillbox: a reflector antenna having a cylindrical reflector enclosed by two parallel conducting plates perpendicular to the cylinder, spaced less than one wavelength apart.

Illustrative example of subject-matter classified in this group:

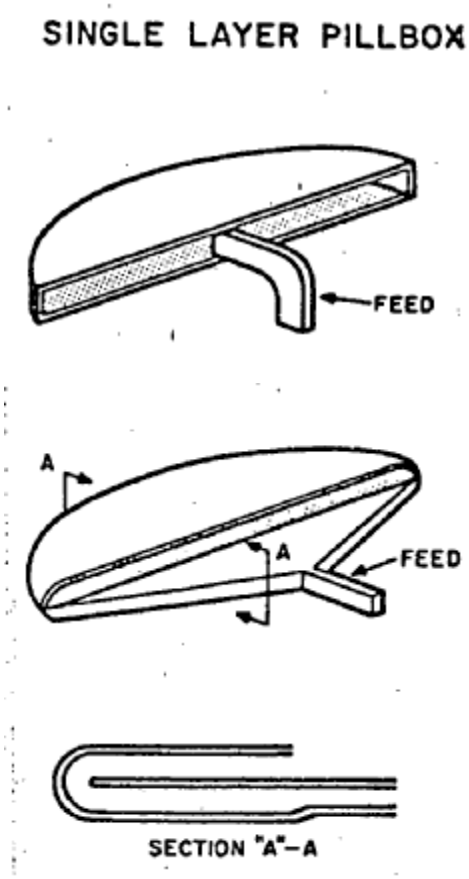

H01Q 19/15

the primary radiating source being a line source, e.g. leaky waveguide aerials

Definition statement

This place covers:

A continuous distribution of sources of electromagnetic radiation, lying along a line segment.

Illustrative example of subject-matter classified in this group:

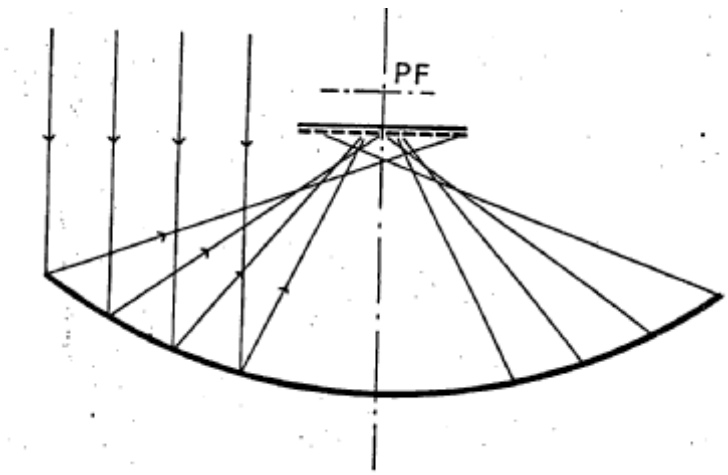

H01Q 19/17

the primary radiating source comprising two or more radiating elements (H01Q 19/15, H01Q 25/00 take precedence)

Definition statement

This place covers:

Reflector fed by a number of antenna elements.

Illustrative example of subject-matter classified in this group:

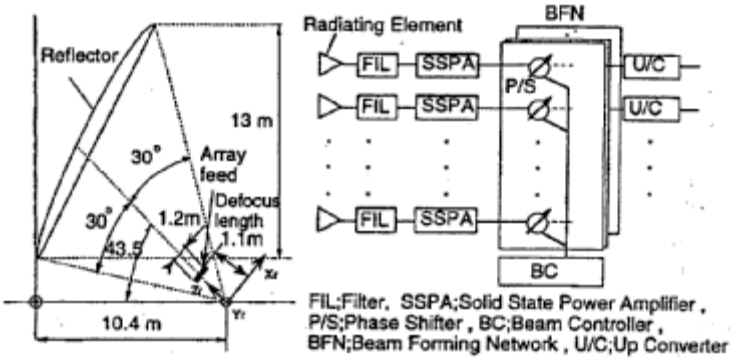

Fig.2 Antenna configuration and active phased array feed.

References

Limiting references

This place does not cover:

the primary radiating source comprising two or more radiating elements	H01Q 19/15, H01Q 25/00

Synonyms and Keywords

In patent documents, the following words/expressions are often used as synonyms:

- "array-fed", "array feed", "feed array", "feed cluster", "multifeed reflector" and "duofeed"

H01Q 19/175

{arrayed along the focal line of a cylindrical focusing surface}

Definition statement

This place covers:

Cylindrical reflector (curved in one dimension) illuminated by a line source of finite extent.

Illustrative example of subject-matter classified in this group:

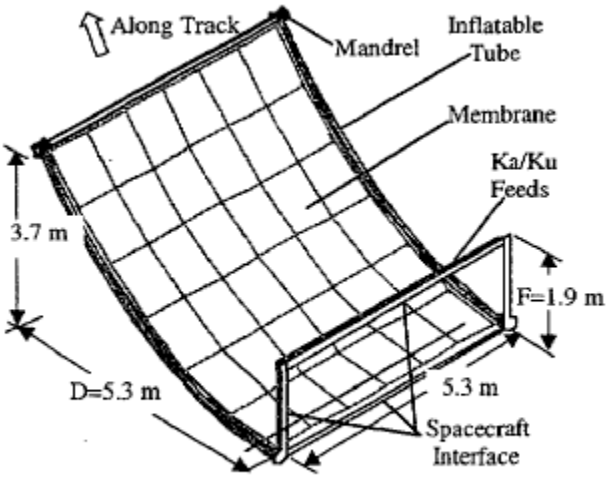

Figure 1 – Membrane Antenna Configuration

H01Q 19/18

having two or more spaced reflecting surfaces ({surfaces of convex toroïdal shape H01Q 19/102; using a deflecting plane mirror H01Q 19/104; splash plate feeds H01Q 19/134} ; producing pencil beam by two cylindrical reflectors with their focal lines orthogonally disposed H01Q 19/20)

Definition statement

This place covers:

Illustrative example of subject-matter classified in this group:

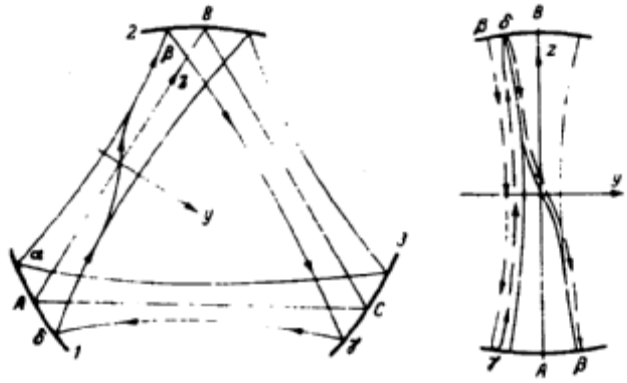

Fig. 3

References

Limiting references

This place does not cover:

surfaces of convex toroïdal shape	H01Q 19/102
using a deflecting plane mirror	H01Q 19/104
splash plate feeds	H01Q 19/134

producing pencil beam by two cylindrical reflectors with their focal lines orthogonally disposed	H01Q 19/20

Special rules of classification

Inactive.

H01Q 19/185

wherein the surfaces are plane

Definition statement

This place covers:

Illustrative example of subject-matter classified in this group:

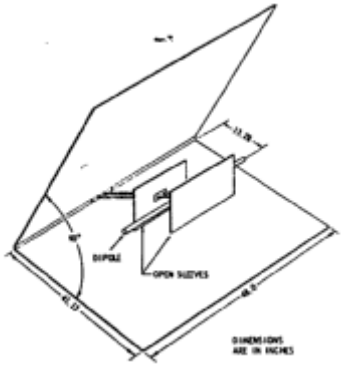

Special rules of classification

Inactive.

H01Q 19/19

comprising one main concave reflecting surface associated with an auxiliary reflecting surface

Definition statement

This place covers:

Classical dual reflector systems.

Cassegrain reflector antenna with a convex subreflector; Gregorian reflector antenna with a concave subreflector.

Illustrative example of subject-matter classified in this group:

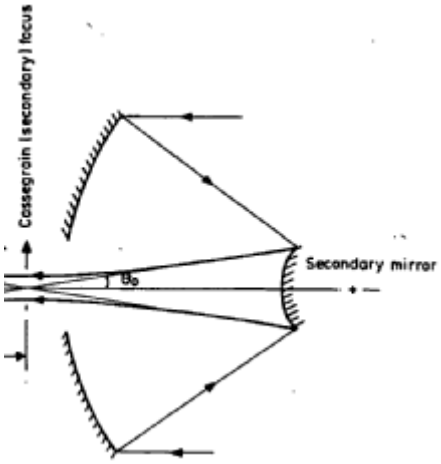

H01Q 19/191

{wherein the primary active element uses one or more deflecting surfaces, e.g. beam waveguide feeds}

Definition statement

This place covers:

Quasi-optical collimators.

Illustrative example of subject-matter classified in this group:

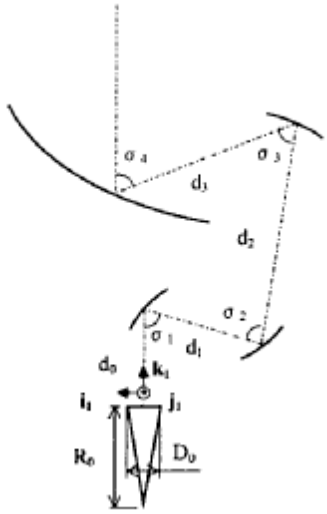

H01Q 19/192

{with dual offset reflectors}

Definition statement

This place covers:

Dual-offset Cassegrain or Gregorian systems.

Illustrative example of subject-matter classified in this group:

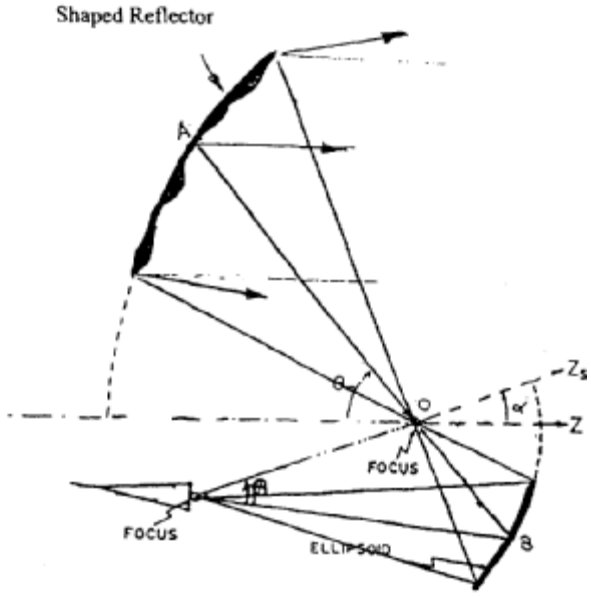

H01Q 19/193

{with feed supported subreflector (splash plate feeds H01Q 19/134)}

Definition statement

This place covers:

The sub-reflector is connected to the feeder system; mechanical considerations.

Illustrative example of subject-matter classified in this group:

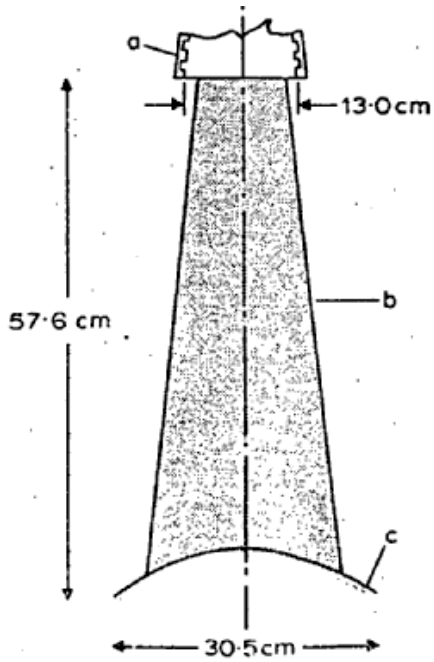

Fig. 1c *Configuration of feed and subreflector assembly*
(i) 6 scalar feed horn
(ii) 6 dielectric-foam cone, $\epsilon_r = 1 \cdot 15$
(iii) Subreflector

References

Limiting references

This place does not cover:

with feed supported subreflector (splash plate feeds)	H01Q 19/134

H01Q 19/195

wherein a reflecting surface acts also as a polarisation filter or a polarising device

Definition statement

This place covers:

For example: polarisation sensitive main reflector in a twist reflector system.

Illustrative example of subject-matter classified in this group:

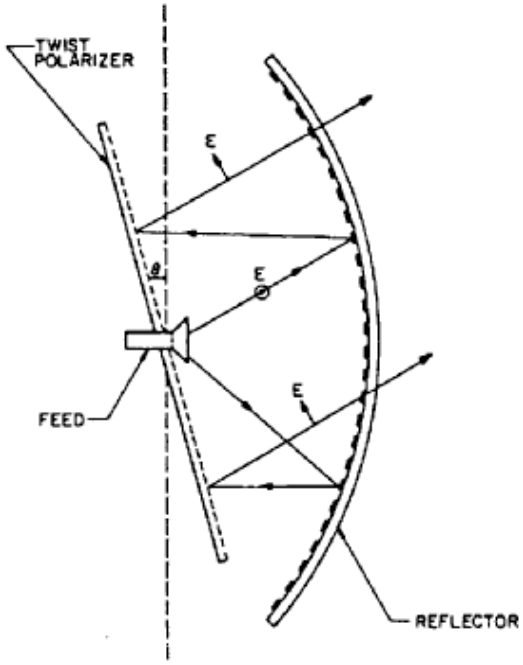

Fig. 1. Twist reflector antenna system.

H01Q 19/20

Producing pencil beam by two cylindrical focusing devices with their focal lines orthogonally disposed

Definition statement

This place covers:

An antenna whose radiation pattern consists of a single main lobe with narrow principal half-power beamwidths and sidelobes having relatively low levels.

Illustrative example of subject-matter classified in this group:

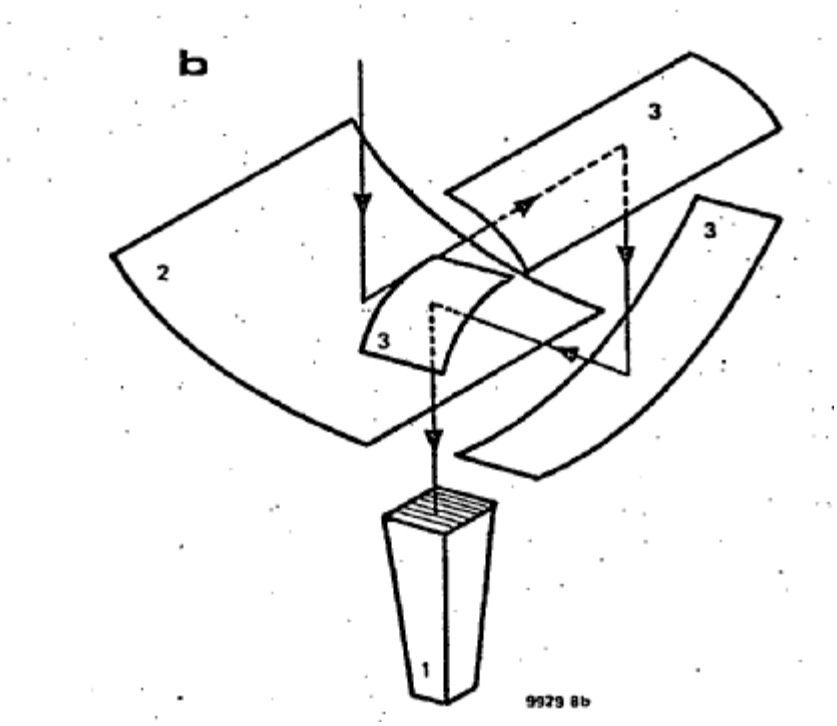

H01Q 19/22

using a secondary device in the form of a single substantially straight conductive element

Definition statement

This place covers:

It is either a reflector or a director.

Illustrative example of subject-matter classified in this group:

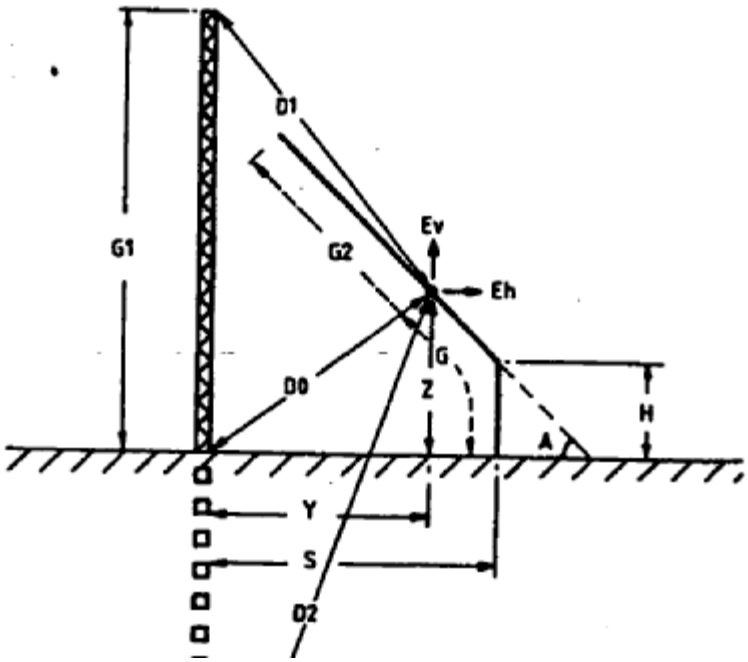

Special rules of classification

Group is inactive.

H01Q 19/24

the primary active element being centre-fed and substantially straight, e.g. H-aerial

Definition statement

This place covers:

Illustrative example of subject-matter classified in this group:

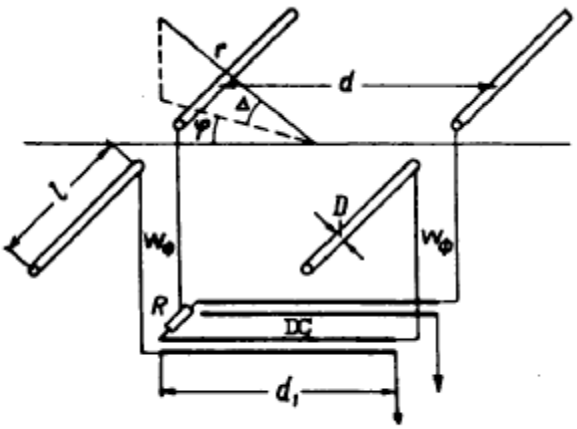

Fig. 1

H01Q 19/26

the primary active element being end-fed and elongated

Definition statement

This place covers:

Monopole with either a reflector or a director in the form of a monopole.

Illustrative example of subject-matter classified in this group:

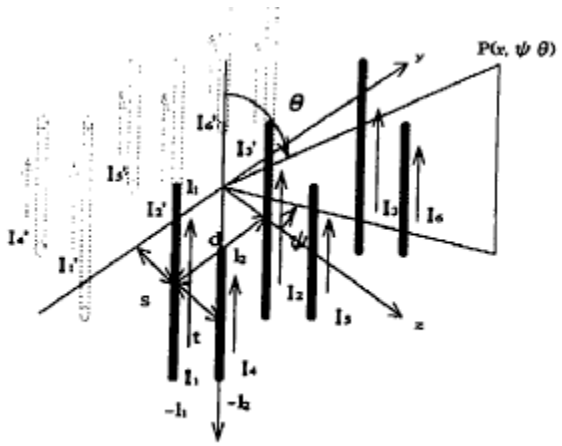

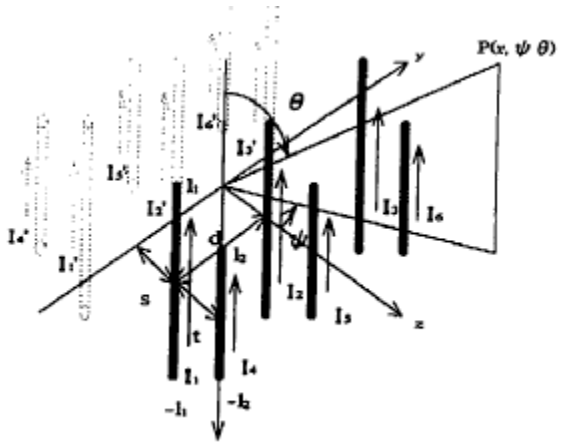

Special rules of classification

Group is inactive.

H01Q 19/28

using a secondary device in the form of two or more substantially straight conductive elements (log-periodic aerials H01Q 11/10; constituting a reflecting surface H01Q 19/10)

Definition statement

This place covers:

This is inherently a yagi-principle: the parasitic elements should have a similar shape as the excited element.

Illustrative example of subject-matter classified in this group:

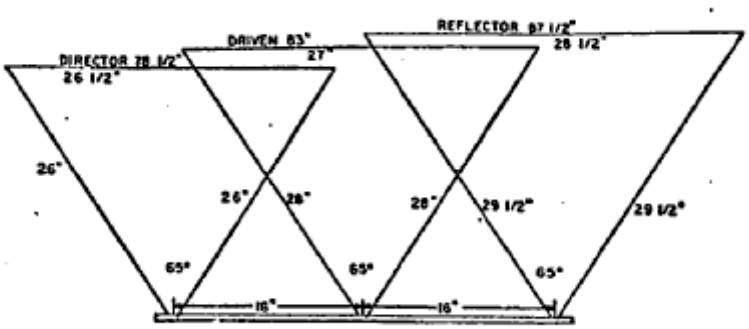

References

Limiting references

This place does not cover:

using a secondary device in the form of two or more substantially straight conductive elements (log-periodic aerials)	H01Q 11/10
constituting a reflecting surface	H01Q 19/10

H01Q 19/30

the primary active element being centre-fed and substantially straight, e.g. Yagi-aerial

Definition statement

This place covers:

A linear end-fire array consisting of a driven element, a reflector element, and one or more director elements.

Illustrative example of subject-matter classified in this group:

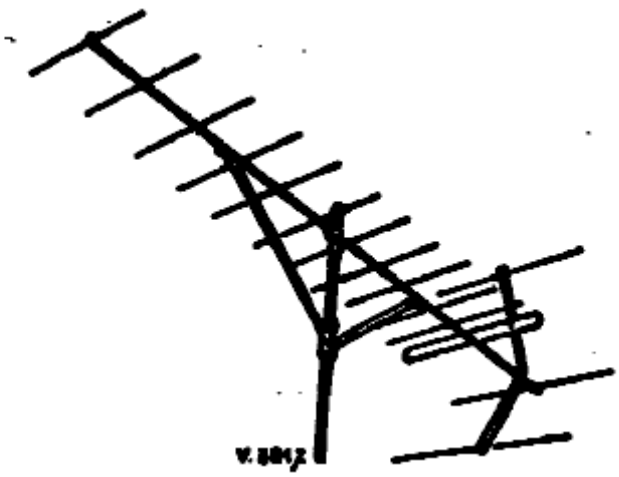

Glossary of terms

In this place, the following terms or expressions are used with the meaning indicated:

Driven element	radiating element coupled directly to the feed line of an antenna

Director element	a parasitic element located forward of the driven element
Reflector element	a parasitic element located in a direction other than forward.

Synonyms and Keywords

In patent documents, the following words/expressions are often used as synonyms:

- "Yagi-antenna" and "Yagi-Uda antenna"

H01Q 19/32

the primary active element being end-fed and elongated

Definition statement

This place covers:

For example monopole yagis and ESPAR.

Illustrative examples of subject-matter classified in this group:

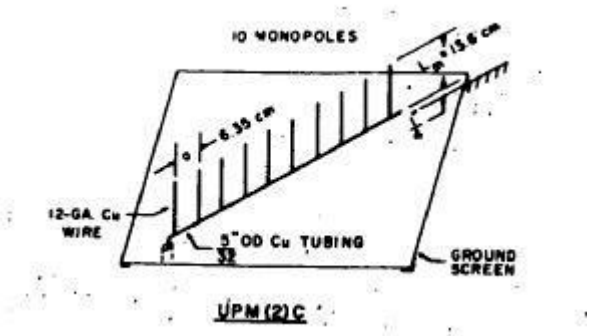

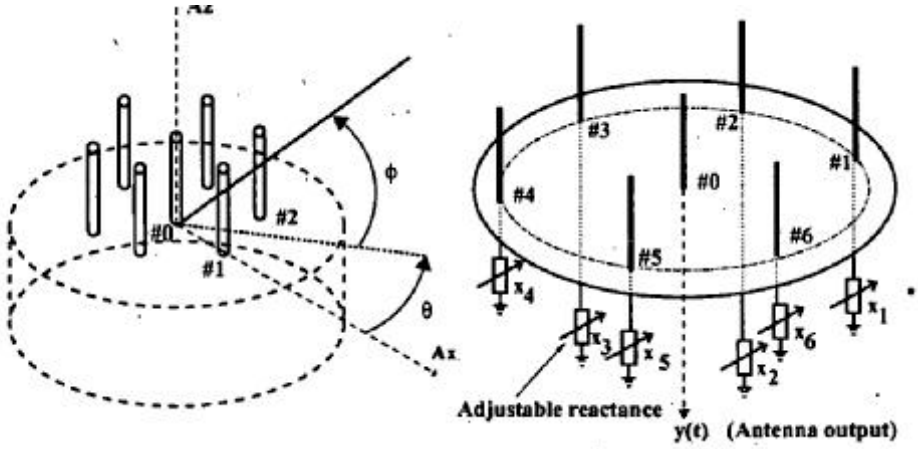

H01Q 21/00

Aerial arrays or systems (producing a beam the orientation or the shape of the directional pattern of which can be changed or varied H01Q 3/00; {combination of imbricated aerials or arrays operating on different wavebands H01Q 5/40;} electrically-long aerials H01Q 11/00)

Definition statement

This place covers:

An antenna comprised of a number of identical radiating elements in a regular arrangement and excited to obtain a prescribed radiation pattern.

References

Limiting references

This place does not cover:

Producing a beam the orientation or the shape of the directional pattern of which can be changed or varied	H01Q 3/00
Combination of imbricated aerials or arrays operating on different wavebands	H01Q 5/40
Electrically-long aerials	H01Q 11/00

Synonyms and Keywords

In patent documents, the following words/expressions are often used as synonyms:

- "array antenna" and "antenna array"

H01Q 21/0006

{Particular feeding systems}

Definition statement

This place covers:

Sub-arrays: In large arrays, the elements may be divided into a plurality of subarrays. The division into sub-arrays have a number of advantages, e.g. reduced number of phase shifters, but a more complex feed layout.

H01Q 21/0012

{Radial guide fed arrays}

Definition statement

This place covers:

The power is distributed using a radial waveguide.

Illustrative example of subject-matter classified in this group:

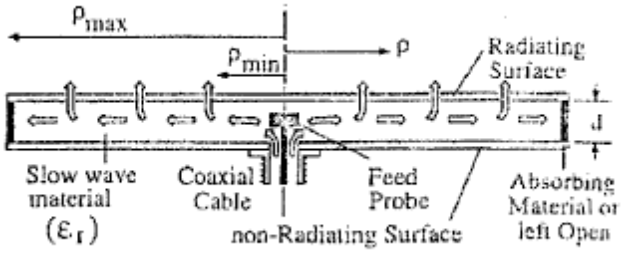

Glossary of terms

In this place, the following terms or expressions are used with the meaning indicated:

RLSA	Radial line Slot Antenna

H01Q 21/0018

{Space- fed arrays}

Definition statement

This place covers:

The power is distributed via space to receiving elements, which in turn (re)transmit: e.g. active lens, see also H01Q 3/46.

Illustrative examples of subject-matter classified in this group:

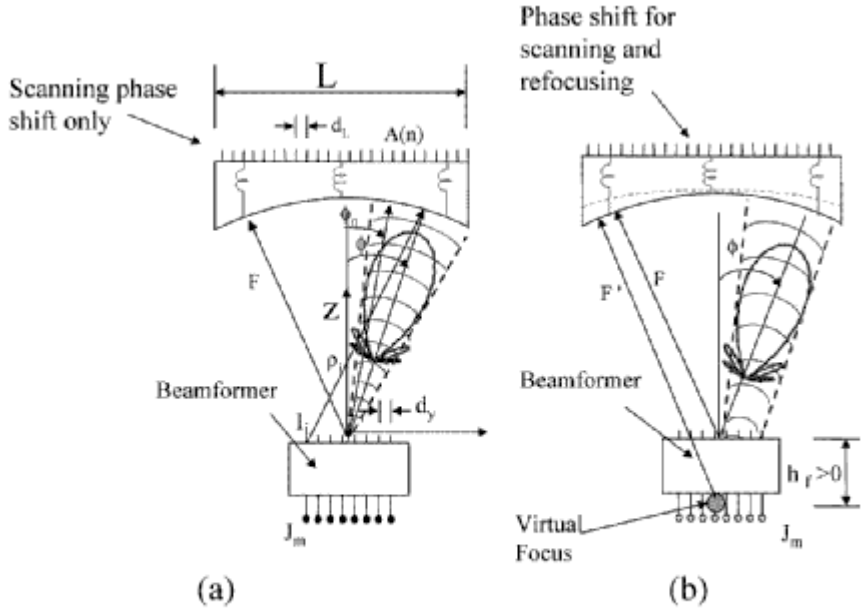

Fig. 1. Space fed array configurations. (a) Array with subarraying feed at focus. (b) Array with subarraying feed and re-focussed objective lens.

H01Q 21/0025

{Modular arrays}

Definition statement

This place covers:

Any T/R module is classified here; the modules can be arrays themselves, e.g. subarrays.

Illustrative example of subject-matter classified in this group:

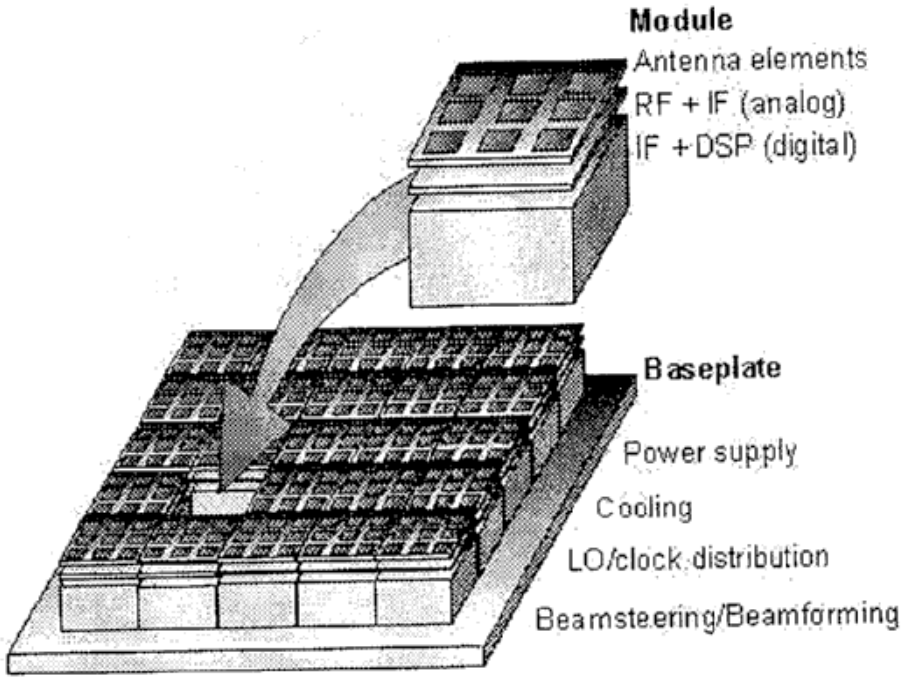

Fig. 1: Modular concept

References

Informative references

Attention is drawn to the following places, which may be of interest for search:

Constructional details for solid-state radar subsystems	G01S 7/032
By semiconductor devices	H01P 1/15
Transmit/receive switching	H04B 1/44

H01Q 21/0031

{Parallel-plate fed arrays; Lens-fed arrays (multibeam arrays H01Q 25/008)}

Definition statement

This place covers:

The power is distributed using a parallel plate waveguide.

Illustrative example of subject-matter classified in this group:

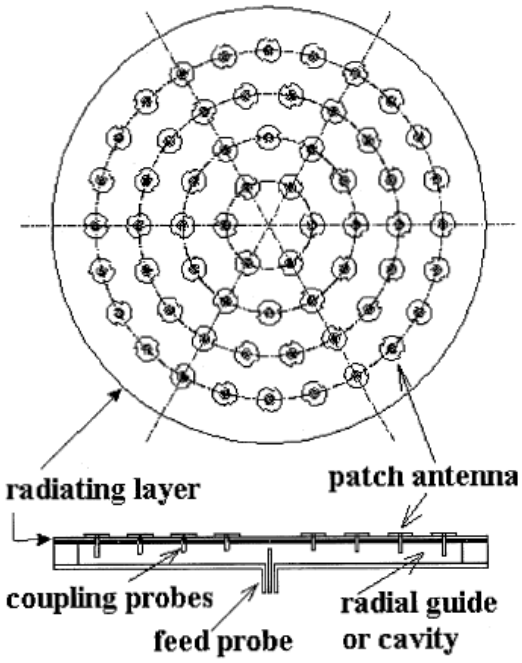

Fig. 1. Configuration of the investigated radial line planar antenna.

References

Limiting references

This place does not cover:

multibeam arrays	H01Q 25/008

H01Q 21/0037

{linear waveguide fed arrays}

Definition statement

This place covers:

The power is distributed using a linear waveguide of a particular cross-section.

Illustrative example of subject-matter classified in this group:

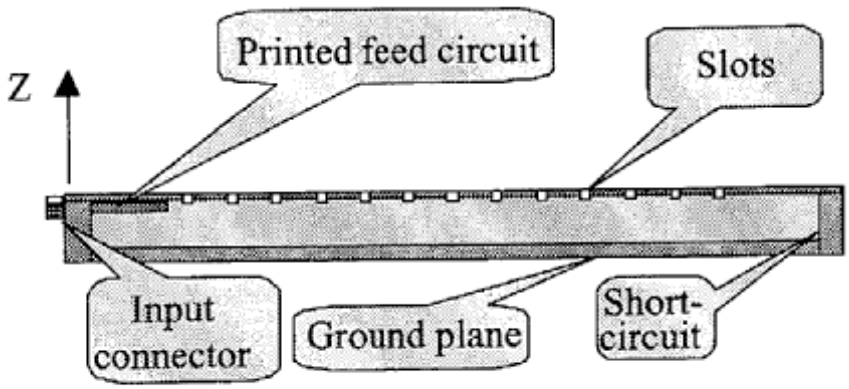

Fig. 1. Transversal section of the antenna.

Synonyms and Keywords

Travelling wave feed.

H01Q 21/0043

{Slotted waveguides (combination with horns H01Q 13/0233)}

Definition statement

This place covers:

The distributing waveguide contains slots.

Illustrative example of subject-matter classified in this group:

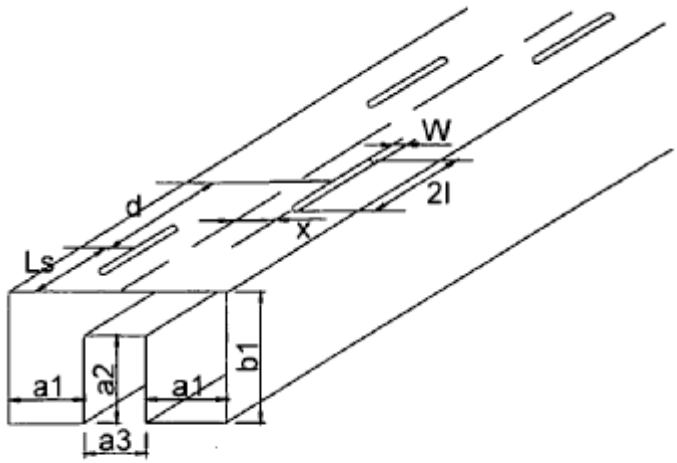

Fig. 1. Geometry of symmetric rectangular single-ridged slotted waveguide antenna.

References

Limiting references

This place does not cover:

combination with horns	H01Q 13/0233

H01Q 21/005

{Slotted waveguides arrays}

Definition statement

This place covers:

Multiple waveguide are formed into an array.

Illustrative example of subject-matter classified in this group:

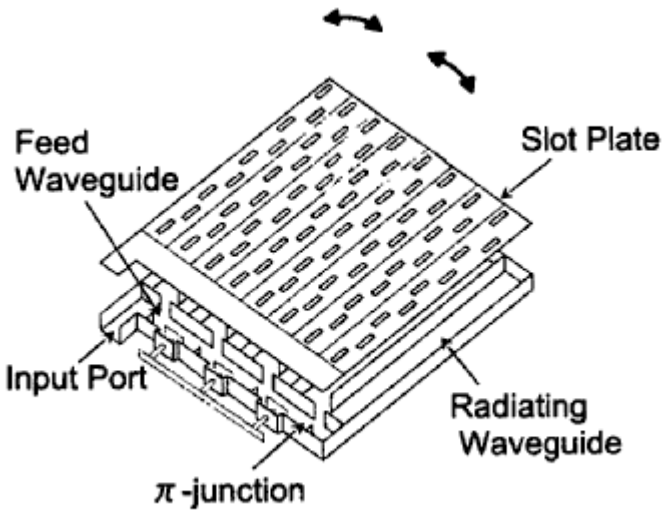

(a) Beam scanning in single-layer slotted arrays.

H01Q 21/0056

{Conically or cylindrically arrayed}

Definition statement

This place covers:

The individual arrays are disposed on a cone or a cylinder.

Illustrative example of subject-matter classified in this group:

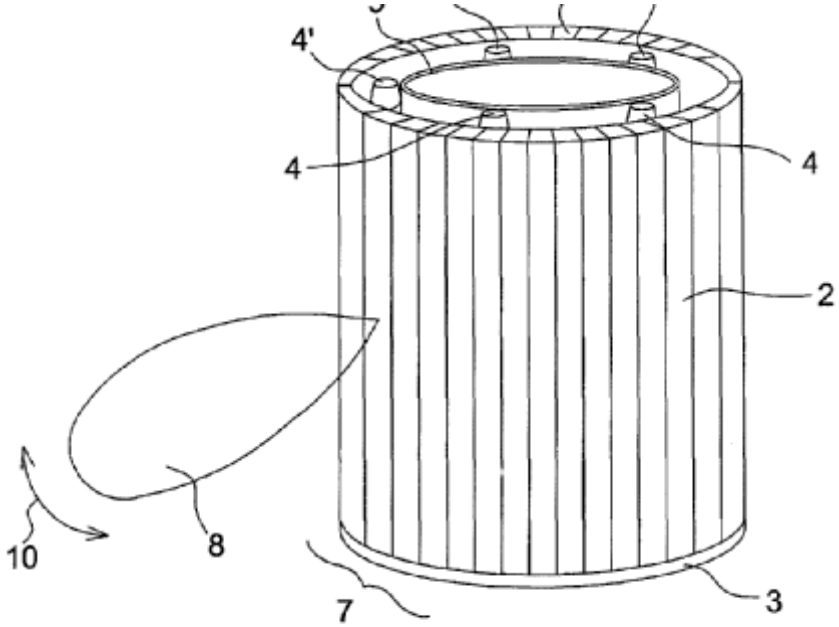

FIG.1

H01Q 21/0062

{the slots being disposed around the feeding waveguide}

Definition statement

This place covers:

Illustrative example of subject-matter classified in this group:

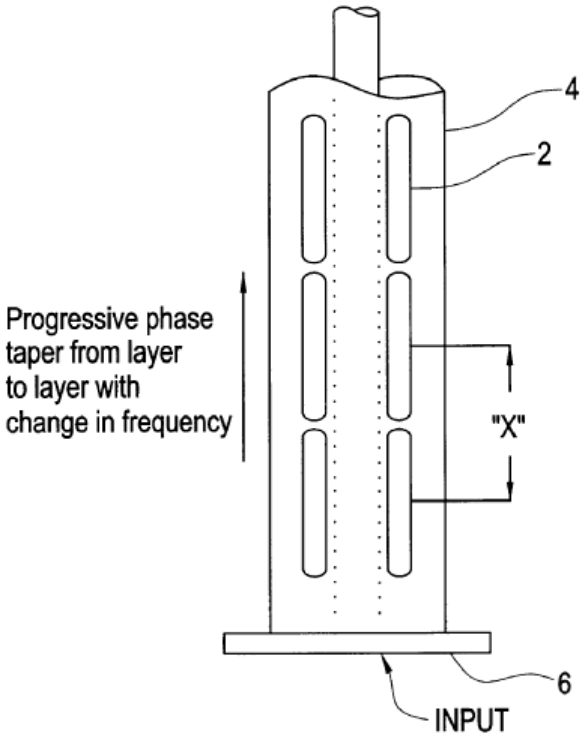

Special rules of classification

Inactive.

H01Q 21/0068

{Dielectric waveguide fed arrays}

Definition statement

This place covers:

Power distribution by linear dielectric waveguide.

Illustrative example of subject-matter classified in this group:

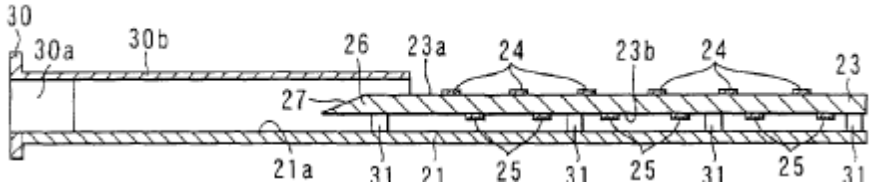

H01Q 21/0075

{Stripline fed arrays (H01Q 21/065 takes precedence)}

Definition statement

This place covers:

Power distribution using stripline, includes microstrips, suspended stripline, etc.

Illustrative example of subject-matter classified in this group:

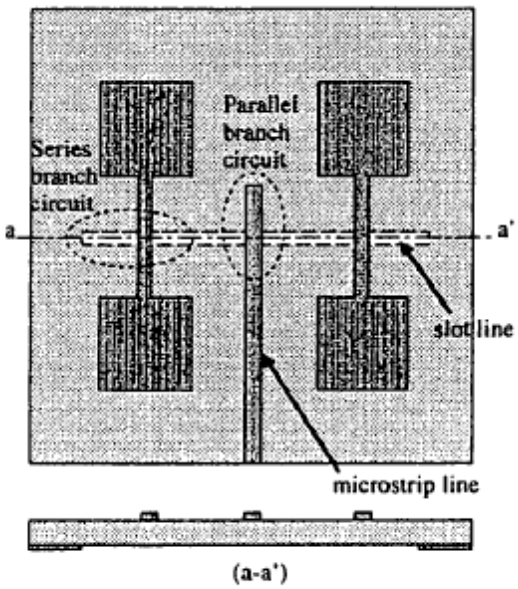

Fig. 1. Layout of array antenna with four elements.

References

Limiting references

This place does not cover:

Stripline fed arrays	H01Q 21/065

H01Q 21/0081

{using suspended striplines}

Definition statement

This place covers:

Here suspended stripline.

The ground plane is not connected directly on the substrate but separated by air space.

Illustrative example of subject-matter classified in this group:

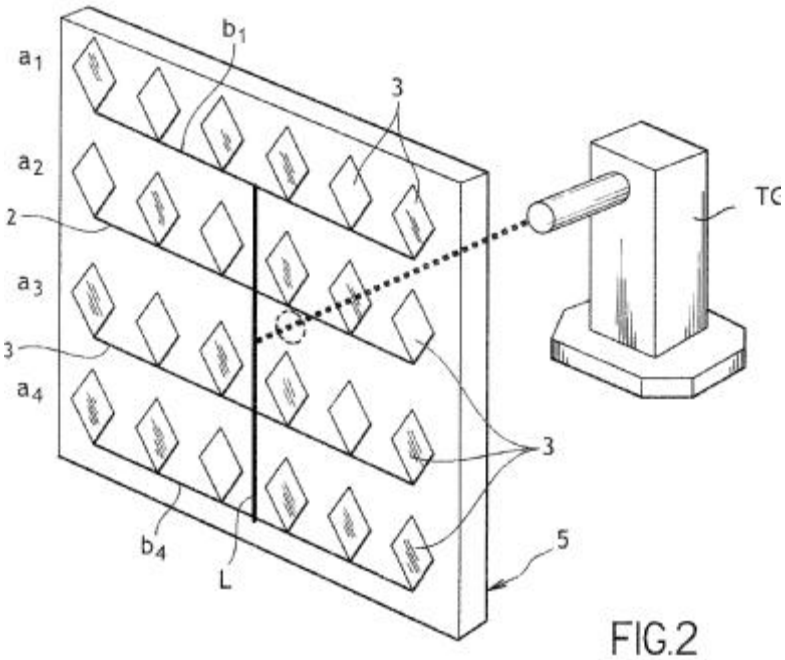

FIG.2

H01Q 21/0087

{Apparatus or processes specially adapted for manufacturing antenna arrays (manufacturing waveguides H01P 11/00)}

Definition statement

This place covers:

Tile construction: the radiating elements, active devices are in parallel layers, which is also the direction in which the array is made.

Brick construction: the interconnections are straightforward / perpendicular to the plane of the array.

Illustrative example of subject-matter classified in this group:

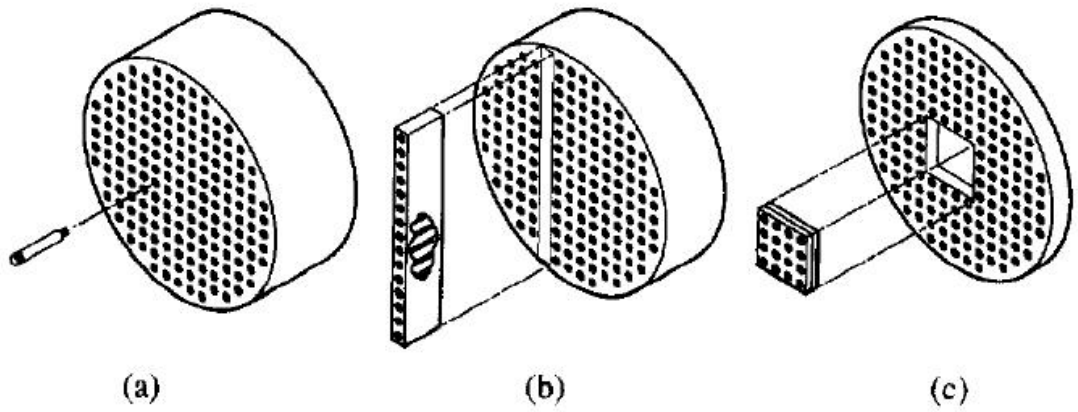

Fig. 1. Evolution of active array architectures.

(a) isolated T/R modules, (b) brick architecture, (c) tile architecture.

References

Limiting references

This place does not cover:

manufacturing waveguides	H01P 11/00

Glossary of terms

In this place, the following terms or expressions are used with the meaning indicated:

Flip chip bonding method	metal bumps are formed on the surface of a chip, then the chip is faced down onto metal pads of a substrate/printed circuit board and by soldering/pressing/ thermosonic or ultrasonic bumps and pads are connected (see H01L 21/00, H01L 23/00, H01L 25/00) 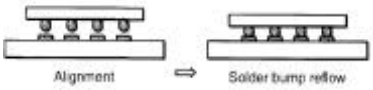 See: US6168972, US2004217472, WO03050865

H01Q 21/0093

{Monolithic arrays}

Definition statement

This place covers:

Using monolithic techniques to produce the array: upcoming technology ceramic cofiring technologies.

Illustrative example of subject-matter classified in this group:

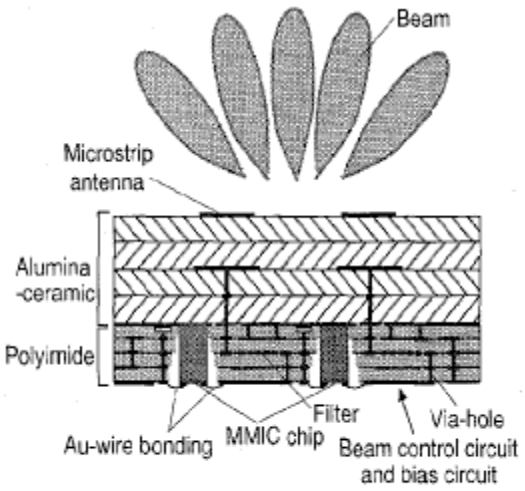

Fig. 1 Schematic diagram of proposed three dimension active antenna

H01Q 21/06

Arrays of individually energised active aerial units similarly polarised and spaced apart

Definition statement

This place covers:

This class only specifies the array geometry, not how they are fed, or whether the array is a phased array

References

Limiting references

This place does not cover:

varying the relative phase or relative amplitude of energisation between two or more active radiating elements; varying the distribution of energy across a radiating aperture	H01Q 3/26 and subgroups

H01Q 21/061

{Two dimensional planar arrays}

Definition statement

This place covers:

Two-dimensional array.

Illustrative example of subject-matter classified in this group:

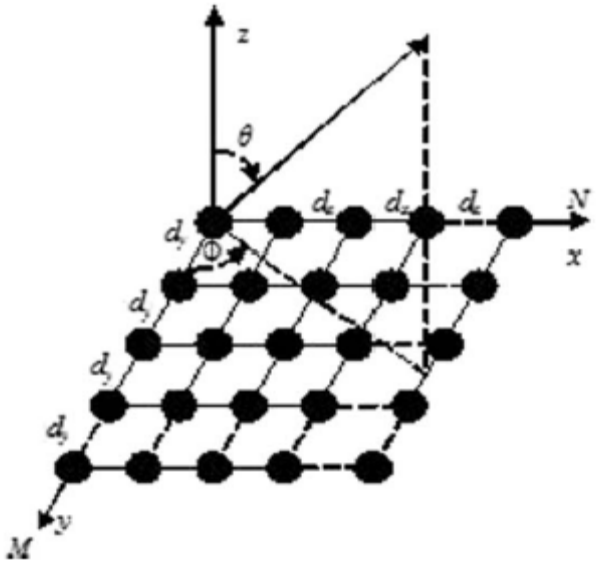

Fig. 1. Structure of a uniform planar antenna array.

H01Q 21/062

{using dipole aerials; (H01Q 21/067, H01Q 21/068 take precedence)}

Definition statement

This place covers:

2D dipole array.

Illustrative example of subject-matter classified in this group:

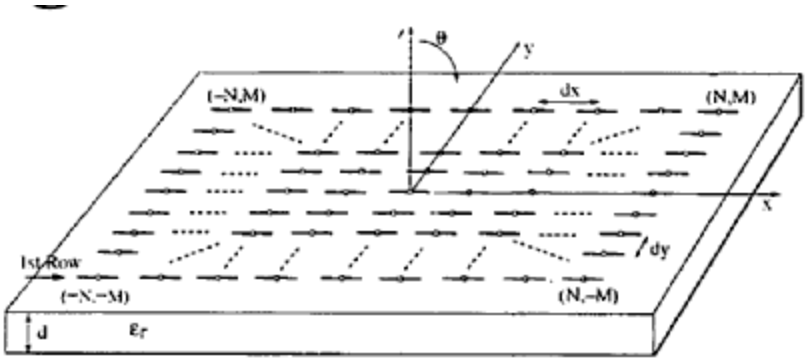

Fig. 1. Finite array of printed dipoles on a grounded substrate of infinite extent.

References

Limiting references

This place does not cover:

using dipole aerials	H01Q 21/067, H01Q 21/068

H01Q 21/064

{using horn or slot aerials (slotted waveguides arrays H01Q 21/005)}

Definition statement

This place covers:

2D slot/horn array, includes vivaldi elements.

Illustrative example of subject-matter classified in this group:

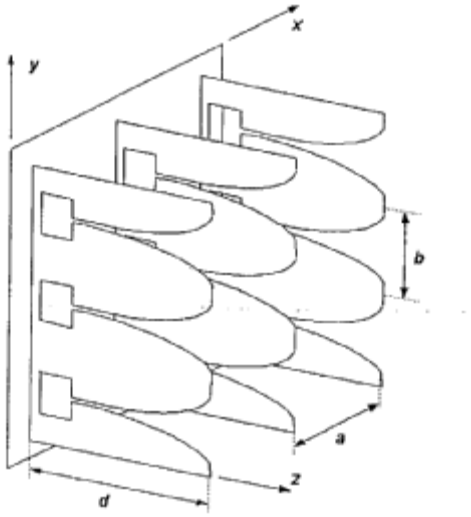

References

Limiting references

This place does not cover:

slotted waveguides arrays	H01Q 21/005

H01Q 21/065

{Patch antenna array}

Definition statement

This place covers:

2D array of patches.

Illustrative example of subject-matter classified in this group:

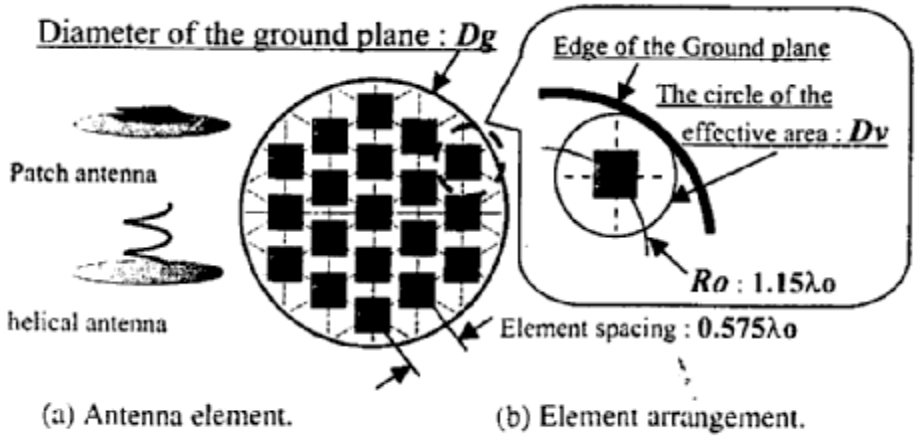

Fig. 1 Triangle arrangement array antenna.

H01Q 21/067

{using endfire radiating aerial units transverse to the plane of the array}

Definition statement

This place covers:

Specific end-fire type of elements, e.g. rod antennas, helical antennas.

Illustrative example of subject-matter classified in this group:

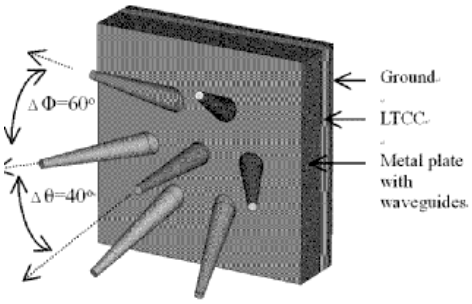

(a)

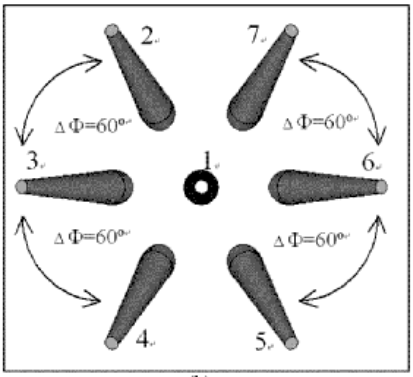

(b)

H01Q 21/068

{using parallel coplanar travelling wave or leaky wave aerial units (H01Q 21/065 takes precedence)}

Definition statement

This place covers:

Arrays of travelling wave or leaky wave units.

Illustrative example of subject-matter classified in this group:

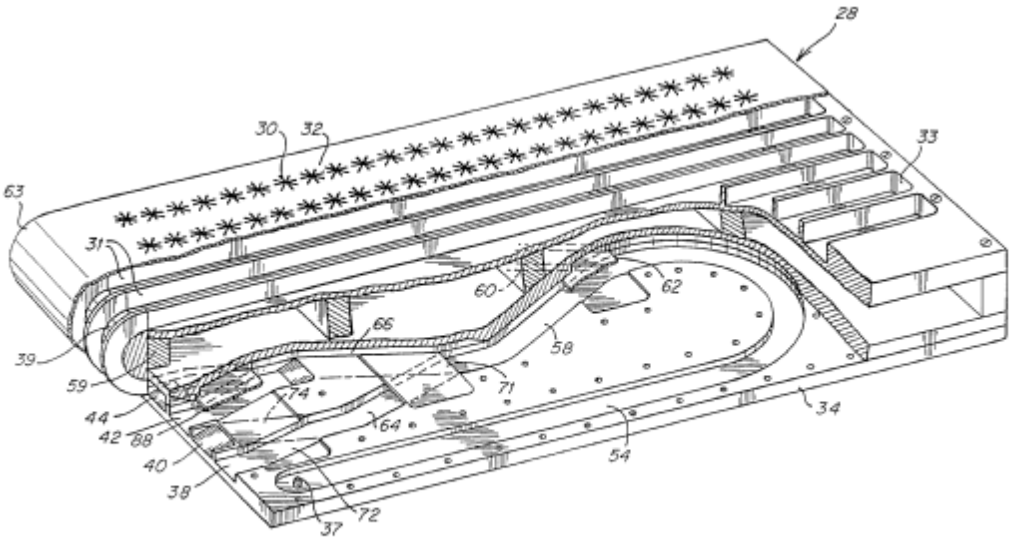

Fig 2

References

Limiting references

This place does not cover:

using parallel coplanar travelling wave or leaky wave aerial units	H01Q 21/065

H01Q 21/08

the units being spaced along or adjacent to a rectilinear path {(waveguide fed H01Q 21/0037)}

Definition statement

This place covers:

A one-dimensional array of elements whose corresponding points lie along a straight line.

Illustrative example of subject-matter classified in this group:

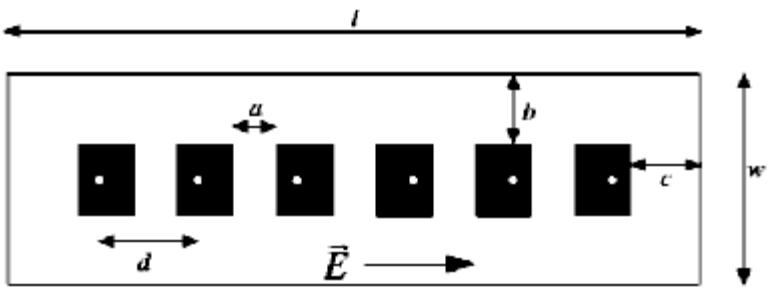

Fig. 1. Microstrip antenna array layout with element spacing *d*. The backside of the substrate plate is fully metallized with copper. The feed probe is zoomed to be clearly visible.

References

Limiting references

This place does not cover:

the units being spaced along or adjacent to a rectilinear path	H01Q 21/0037

Synonyms and Keywords

In patent documents, the following words/expressions are often used as synonyms:

- "linear array antenna" and "uniform linear array"

H01Q 21/10

Collinear arrangements of substantially straight elongated conductive units

Definition statement

This place covers:

A linear array of radiating elements, usually dipoles, with their axis lying in a straight line.

Illustrative example of subject-matter classified in this group:

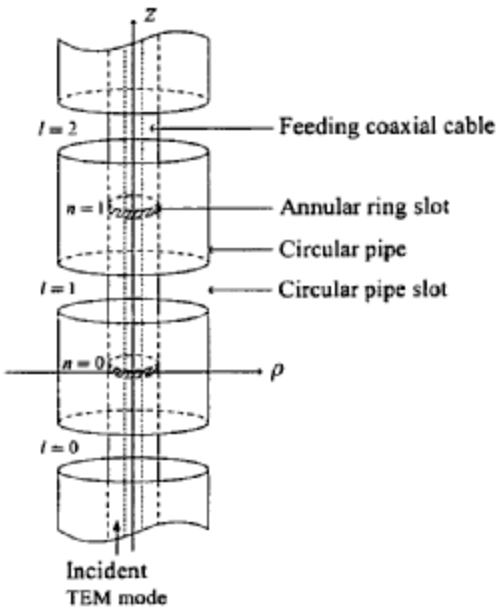

Fig. 1 Structure of ECCD array antenna. The number of annular ring slots is N ($n = 0, 1, \cdots, N-1$) and the number of circular pipe slots is $L = N + 1$ ($l = 0, 1, \cdots, N$).

H01Q 21/12

Parallel arrangements of substantially straight elongated conductive units (travelling-wave aerials comprising transmission line loaded with transverse elements, e.g. "fishbone" aerial H01Q 11/04)

Definition statement

This place covers:

Illustrative example of subject-matter classified in this group:

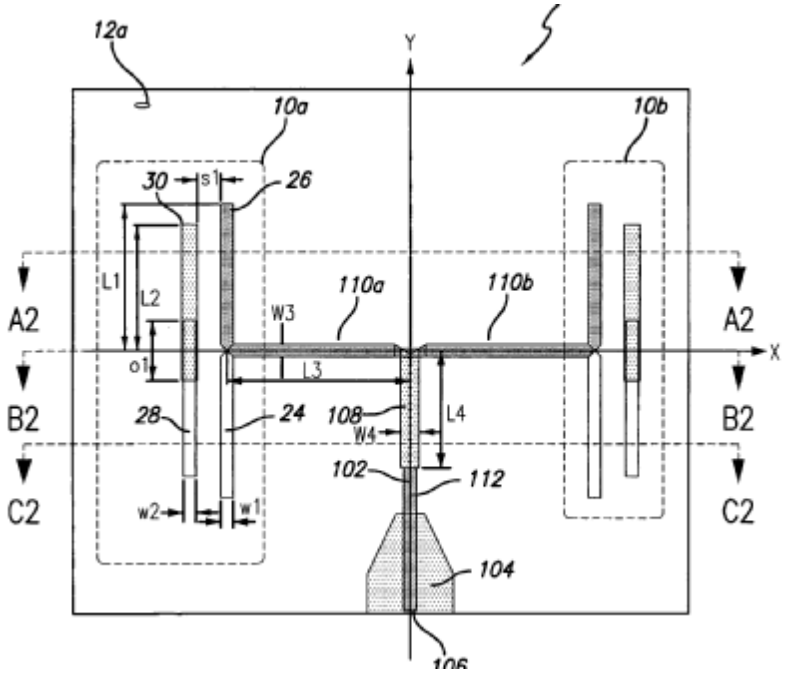

References

Limiting references

This place does not cover:

travelling-wave aerials comprising transmission line loaded with transverse elements, e.g. "fishbone" aerial	H01Q 11/04

Special rules of classification

Inactive group.

H01Q 21/14

Adcock aerials

Definition statement

This place covers:

A pair of vertical antennas separated by a distance of one-half wavelength or less, and connected in phase opposition to produce a radiation pattern having the shape of the figure eight in all planes containing the centers of the two antennas.

Two vertical elements fed by 180° apart and mounted so that the system may be rotated; used for direction finding.

Illustrative example of subject-matter classified in this group:

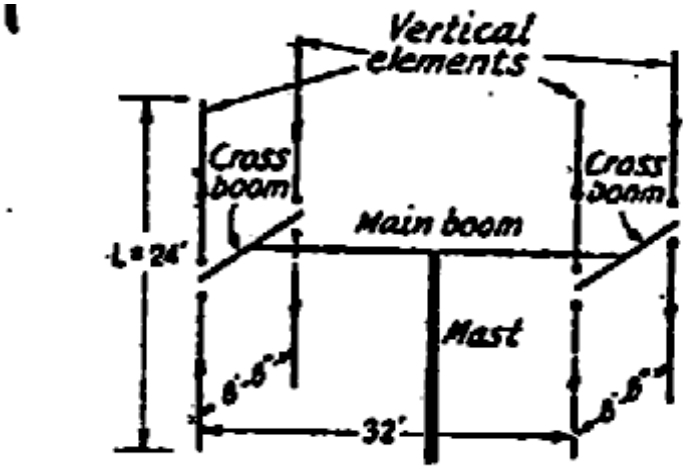

Fig. 1 — Basic arrangement of the antenna.

H01Q 21/16

U-type

Special rules of classification

Inactive group.

H01Q 21/18

H-type

Definition statement

This place covers:

Illustrative example of subject-matter classified in this group:

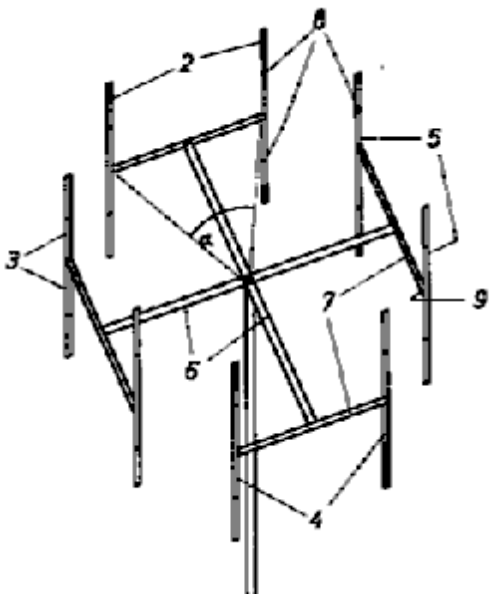

Special rules of classification

Inactive group.

H01Q 21/20

the units being spaced along or adjacent to a curvilinear path {(slotted waveguide arrays H01Q 21/005; circularly or helically slotted waveguides H01Q 21/0062)}

Definition statement

This place covers:

An array of elements whose corresponding points lay on a circle, or a part thereof, e.g. an arc.

Illustrative example of subject-matter classified in this group:

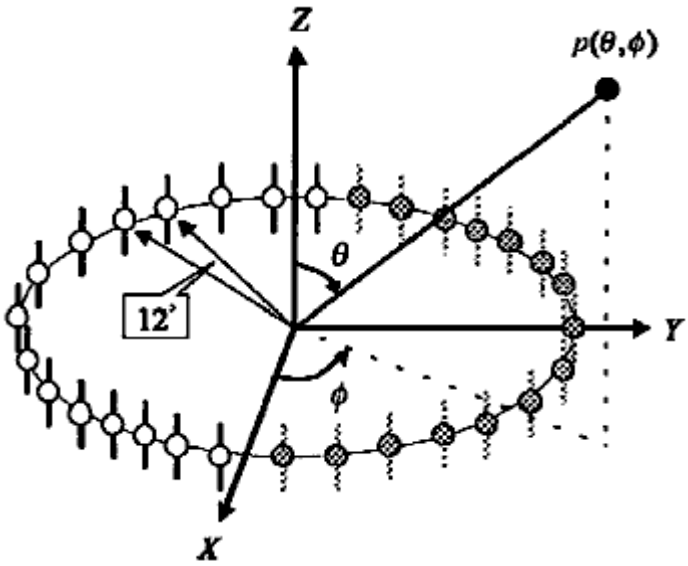

Fig. 2

References

Limiting references

This place does not cover:

slotted waveguide arrays	H01Q 21/005
circularly or helically slotted waveguides	H01Q 21/0062

Synonyms and Keywords

In patent documents, the following words/expressions are often used as synonyms:

- " ring arrays" circular arrays", "conical array", "cylindrical array" and "spherical array"

H01Q 21/205

{providing an omnidirectional coverage (turnstile aerials H01Q 21/26)}

Definition statement

This place covers:

Radiating in all directions simultaneously.

Illustrative examples of subject-matter classified in this group:

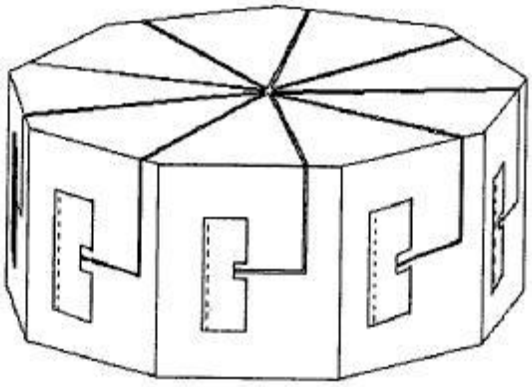

Fig. 7 Regular nine-prism array.

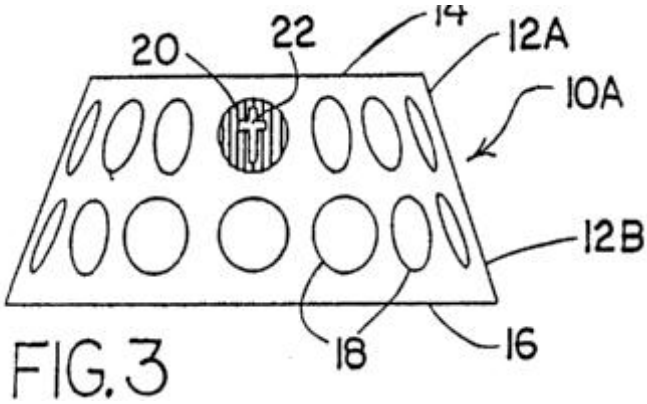

FIG. 3

References

Limiting references

This place does not cover:

turnstile aerials	H01Q 21/26

H01Q 21/22

Aerial units of the array energised non-uniformly in amplitude or phase, e.g. tapered array, binomial array

Definition statement

This place covers:

An antenna that is designed to have a prescribed pattern shape differing significantly from the obtained from a uniform-phase aperture of the same size. not-equally or non-equally amplitude or phase; shaped-beam antenna.

Also arrays where the elements are not located in a regular arrangement but e.g. randomly or thinned ; not-equally spaced.

Space-tapered or density-tapered array, that is an array antenna whose radiation pattern is shaped by varying the density of driven radiating elements over the array surface.

Illustrative examples of subject-matter classified in this group:

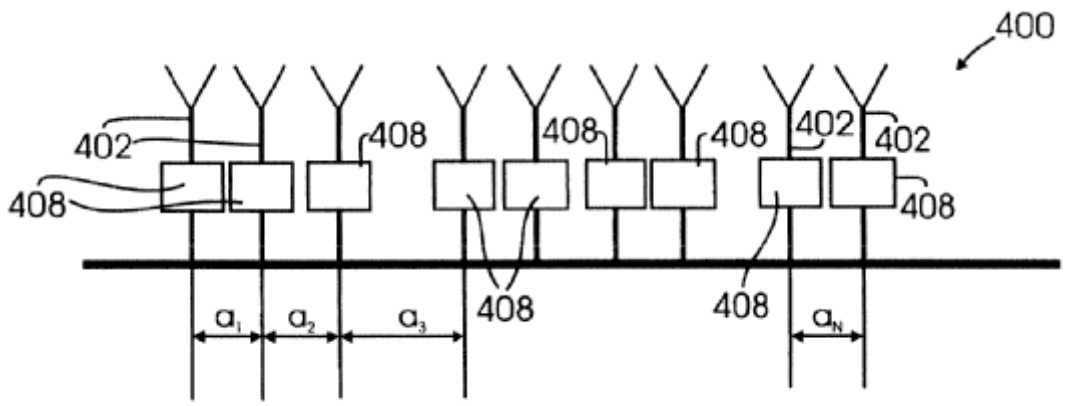

Fig.4

H01Q 21/225

{Finite focus antenna arrays}

Definition statement

This place covers:

Zooming antennas, or near-field focusing antennas. Inactive group.

Illustrative examples of subject-matter classified in this group:

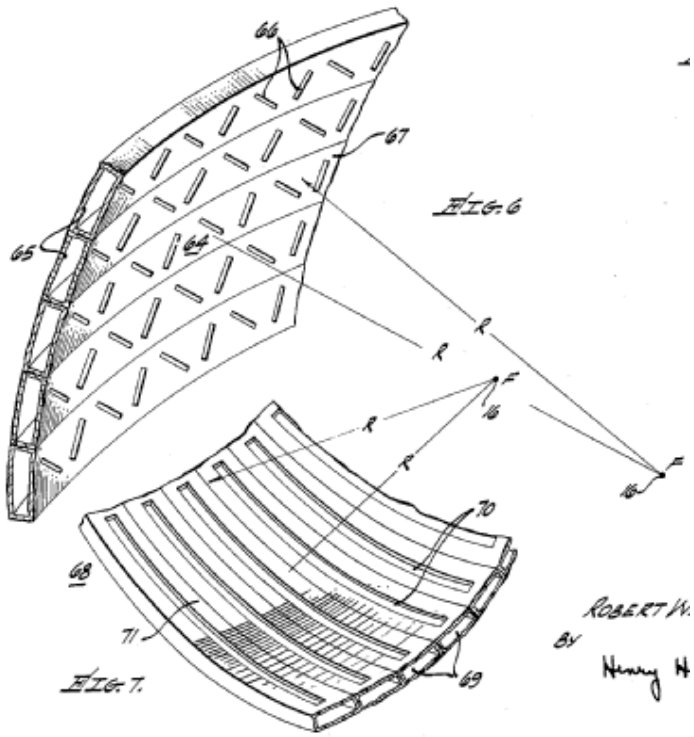

H01Q 21/24

Combinations of aerial elements or aerial units polarised in different directions for transmitting or receiving circularly and elliptically polarised waves or waves linearly polarised in any direction {(circularly polarised patch antennas H01Q 9/0428; circularly polarised horns H01Q 13/0241; cross-polarised horns H01Q 13/0258; polarisation converters H01Q 15/242; cross-polarised rear feeds H01Q 19/136; crossed polarisation dual antenna H01Q 25/001)}

Definition statement

This place covers:

The ability to radiate different polarisations.

Illustrative examples of subject-matter classified in this group:

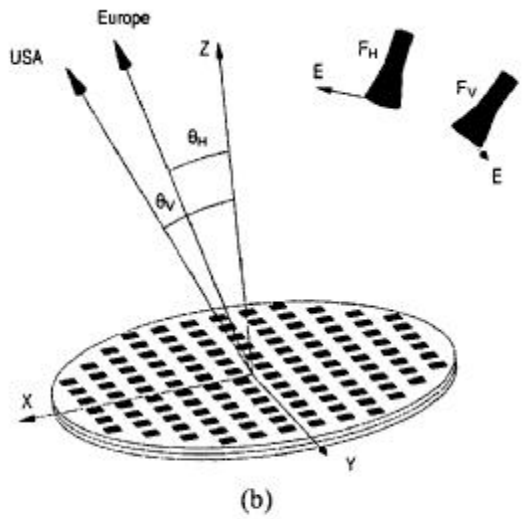

Fig. 1. Dual-polarization dual-coverage three-layer reflectarray. (a) Periodic cell. (b) Reflectarray configuration.

References

Limiting references

This place does not cover:

circularly polarised patch antennas	H01Q 9/0428
circularly polarised horns	H01Q 13/0241
cross-polarised horns	H01Q 13/0258
cross-polarised rear feeds	H01Q 15/242
crossed polarisation dual antenna	H01Q 19/136
crossed polarisation dual antenna	H01Q 25/001

H01Q 21/245

{provided with means for varying the polarisation (polarising devices H01Q 15/24; tracking by comparing linear polarisation compounds G01S 3/146; reducing depolarisation effects H04B 7/00 polarisation diversity H04B 7/10)}

Definition statement

This place covers:

Variable polarisation, adaptive polarisation.

Illustrative examples of subject-matter classified in this group:

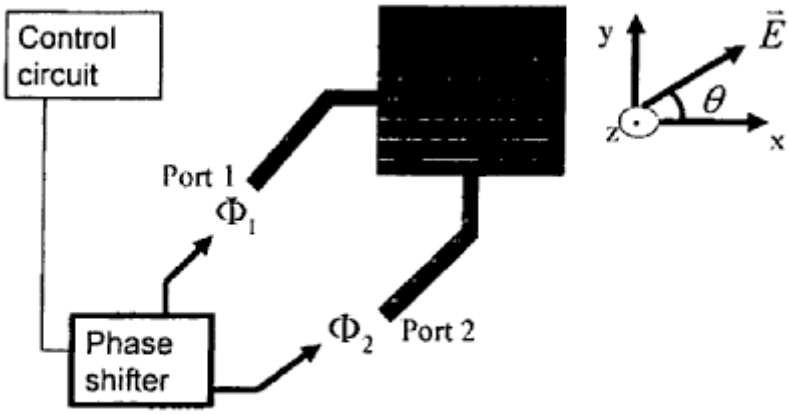

Figure 3. A polarization-agile microstrip-patch antenna with a switchable phase shifter.

References

Limiting references

This place does not cover:

polarising devices	H01Q 15/24
tracking by comparing linear polarisation compounds	G01S 3/146
reducing depolarisation effects	H04B 7/00
polarisation diversity	H04B 7/10

H01Q 21/26

Turnstile or like aerials comprising arrangements of three or more elongated elements disposed radially and symmetrically in a horizontal plane about a common centre

Definition statement

This place covers:

An antenna composed of two dipole antennas, perpendicular to each other, with their axes intersecting at their midpoints. Usually, the currents on the two dipole antennas are equal and in phase quadrature.

Illustrative example of subject-matter classified in this group:

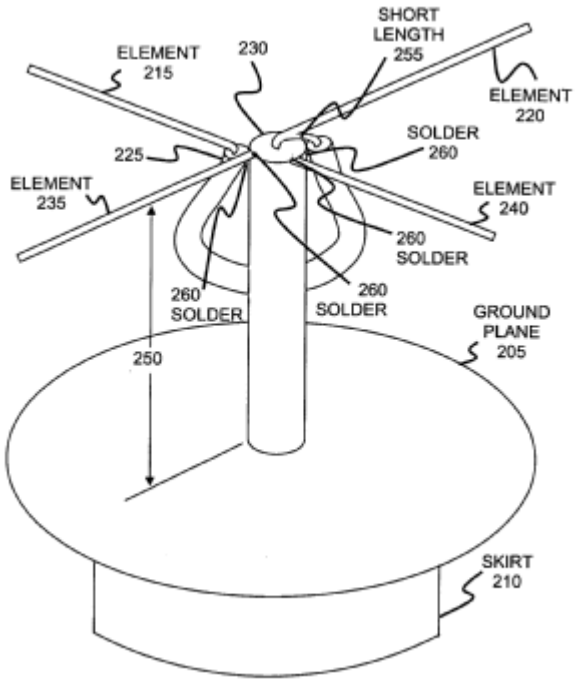

H01Q 21/28

Combinations of substantially independent non-interacting aerial units or systems {(multiple beam H01Q 25/00)}

Definition statement

This place covers:

Multiple antennas or antenna arrays defining an antenna system, but not having any relationship except being defined as part of the antenna system.

Illustrative example of subject-matter classified in this group:

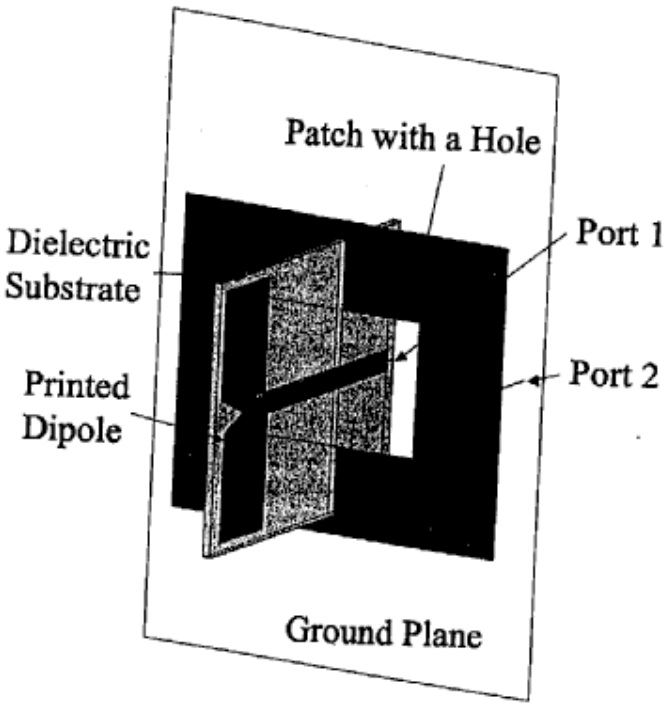

References

Limiting references

This place does not cover:

Combinations of substantially independent non-interacting aerial units or systems	H01Q 25/00

H01Q 21/29

Combinations of different interacting aerial units for giving a desired directional characteristic (H01Q 25/00 takes precedence)

Definition statement

This place covers:

For example used for pattern synthesis; this class is NOT used for diversity applications (H04B 7/08 and subgroups).

If the antennas defining the system do not operate on the same frequency, this group does not apply.

Illustrative example of subject-matter classified in this group:

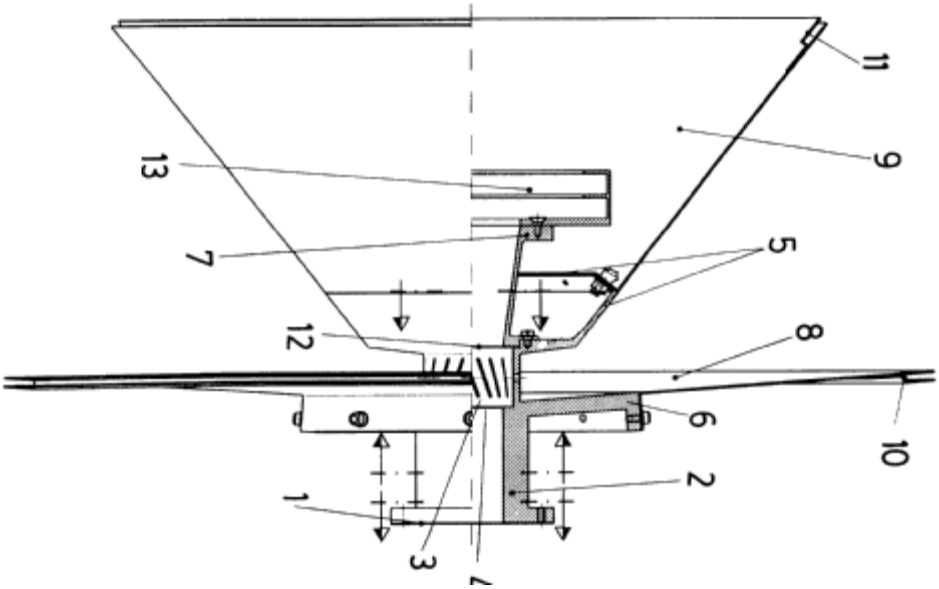

References

Limiting references

This place does not cover:

Combinations of different interacting aerial units for giving a desired directional characteristic	H01Q 25/00

H01Q 21/293

{one unit or more being an array of identical aerial elements (adaptive arrays H01Q 3/2605)}

Definition statement

This place covers:

One of the constituents is an array.

Illustrative example of subject-matter classified in this group:

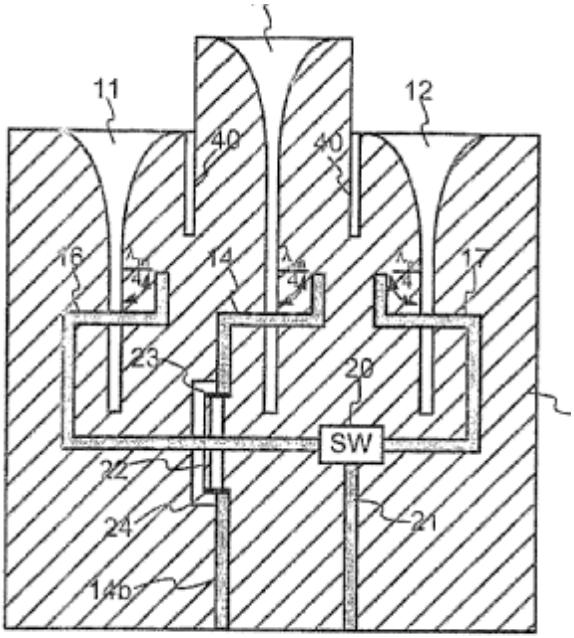

Fig.3

References

Limiting references

This place does not cover:

one unit or more being an array of identical aerial elements	H01Q 3/2605

H01Q 21/296

{Multiplicative arrays}

Definition statement

This place covers:

Form of a signal processing antenna system having circuit elements associated with its radiating element(s) that perform functions such as multiplication, storage, correlation, and time modulation of the input signals

Data processing is used for achieving the final pattern.

Illustrative example of subject-matter classified in this group:

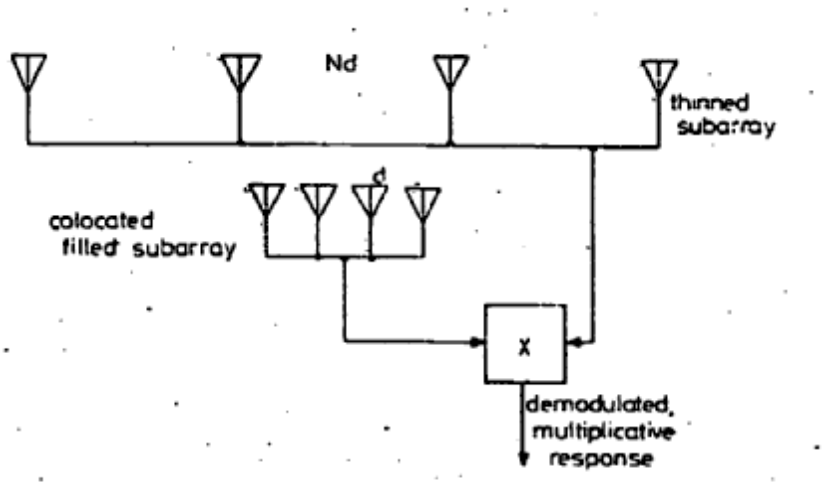

Fig. 2 *Thinned multiplicative array configuration with coincident subarrays*

H01Q 21/30

Combinations of separate aerial units operating in different wavebands and connected to a common feeder system

Definition statement

This place covers:

Separate antennas operating at different frequencies sharing a feeder system (or feed point). This leads to isolation problems.

Illustrative examples of subject-matter classified in this group:

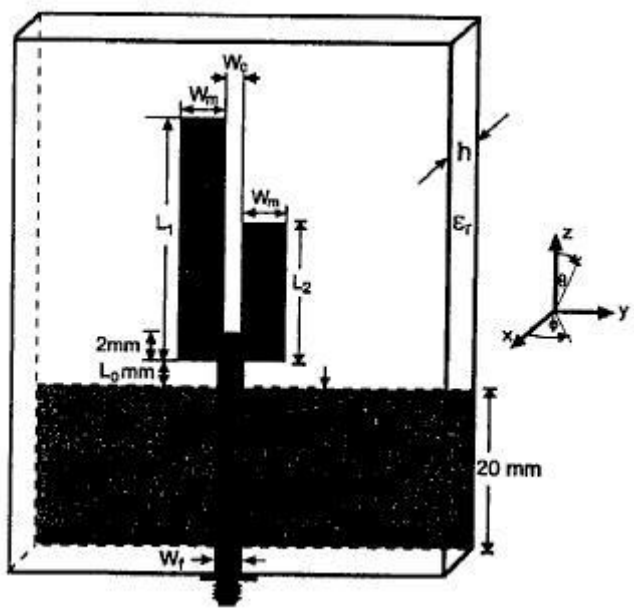

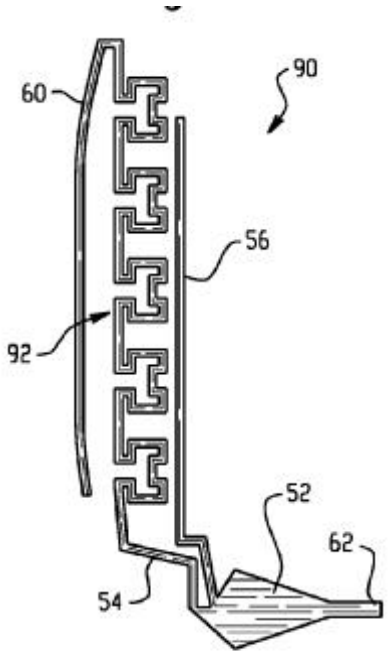

Fig. 6

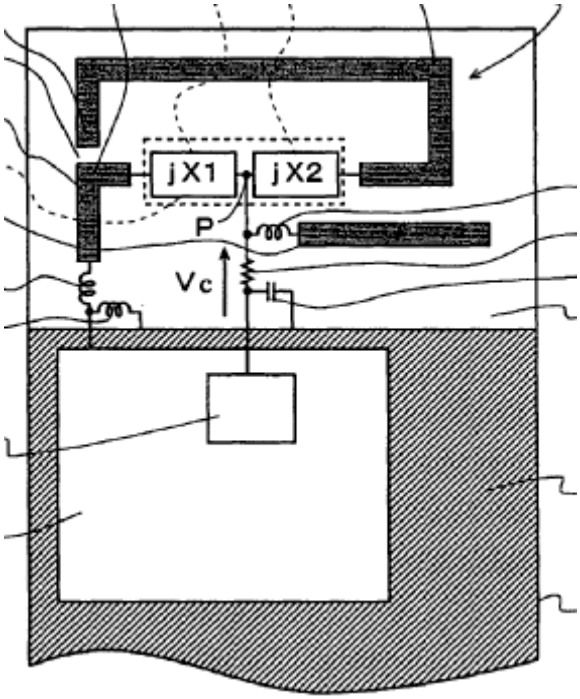

H01Q 23/00

Aerials with active circuits or circuit elements integrated within them or attached to them

Definition statement

This place covers:

Only used in conjunction with another class, and to emphasize there is active circuitry integrated, or mounted at the antenna, e.g. amplifiers, mixers, etc. Not used on its own.

H01Q 25/00

Aerials or aerial systems providing at least two radiating patterns (arrangements for changing or varying the orientation or the shape of the directional pattern H01Q 3/00)

Definition statement

This place covers:

An antenna capable of creating a family of major lobes from a single non-moving aperture, through use of a multiport feed, with one-to-one correspondence between input ports and member lobes, the latter characterized by having unique main beam pointing directions.

Often, the multiple main beam angular positions are arranged to provide complete coverage of a solid angle region of space.

Illustrative example of subject-matter classified in this group:

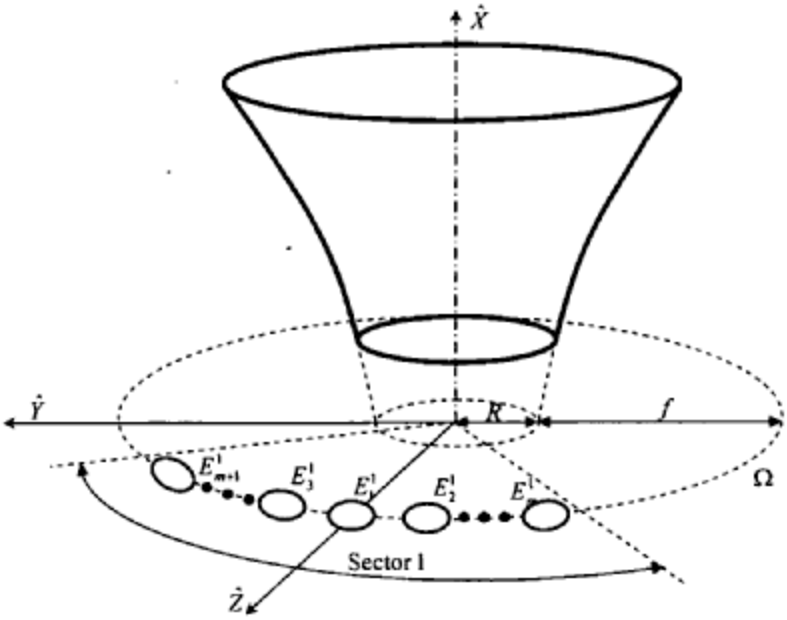

a)

References

Informative references

Attention is drawn to the following places, which may be of interest for search:

Arrangements for changing or varying the orientation or the shape of the directional pattern	H01Q 3/00

H01Q 25/001

{Crossed polarisation dual antennas (orthomode horns H01Q 13/0258; cross-polarised rear feeds H01Q 19/136; orthomode transducers H01P 1/161)}

Definition statement

This place covers:

Illustrative example of subject-matter classified in this group:

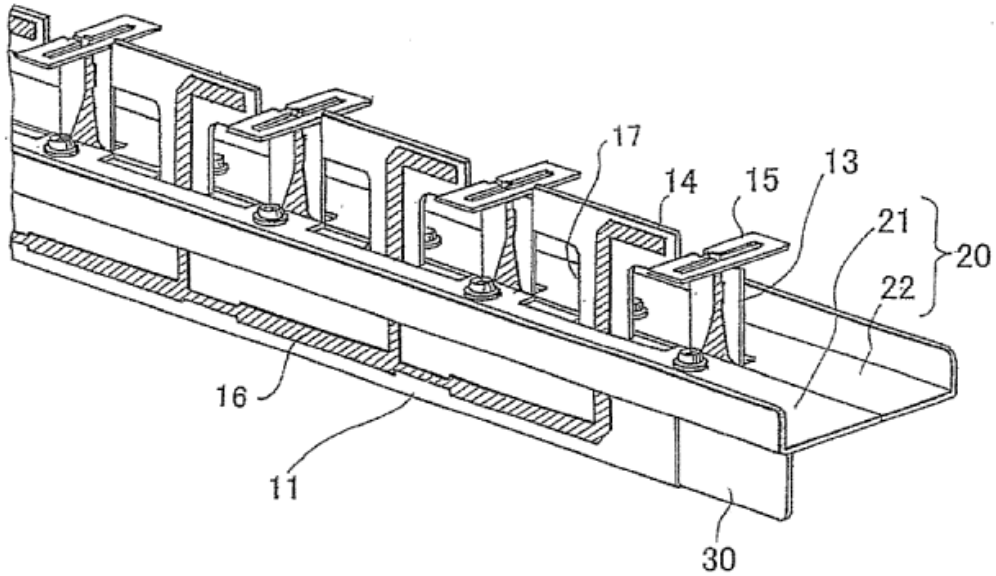

References

Limiting references

This place does not cover:

orthomode horns	H01Q 13/0258
cross-polarised rear feeds	H01Q 19/136
orthomode transducers	H01P 1/161

H01Q 25/002

{providing at least two patterns of different beamwidth; Variable beamwidth antennas}

Definition statement

This place covers:

Illustrative example of subject-matter classified in this group:

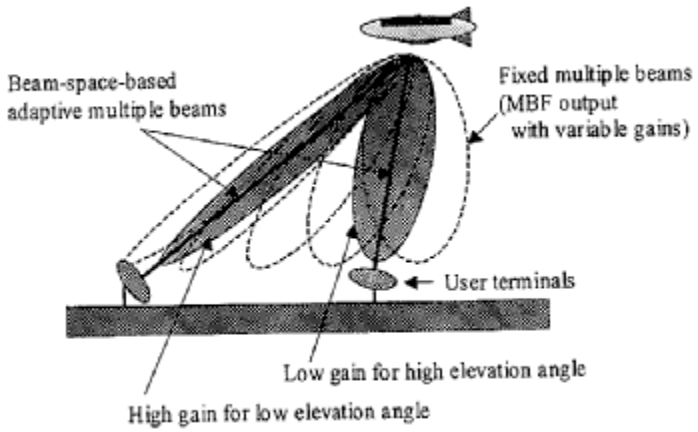

Fig. 5 The concept of variable gain according to the elevation angle

H01Q 25/004

{providing two or four symmetrical beams for Janus application}

Definition statement

This place covers:

Illustrative example of subject-matter classified in this group:

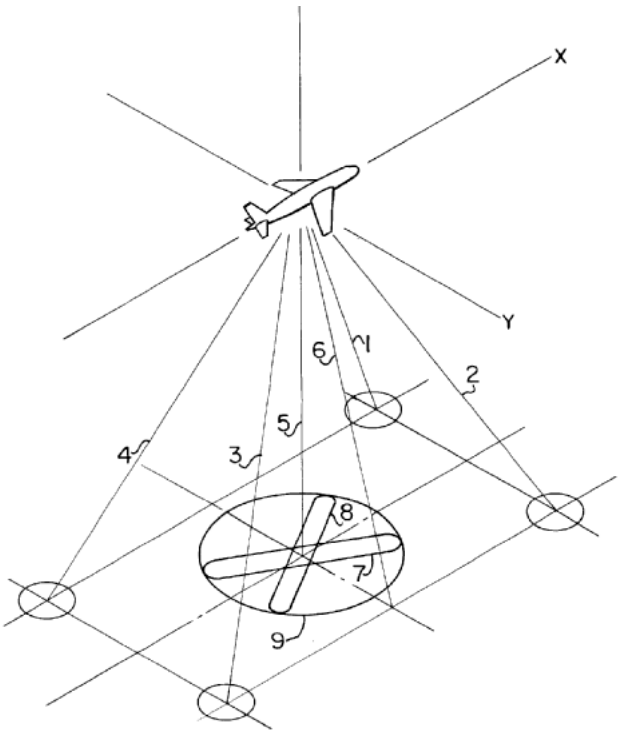

H01Q 25/005

{providing two patterns of opposite direction; back to back antennas (H01Q 25/004 takes precedence)}

Definition statement

This place covers:

Illustrative example of subject-matter classified in this group:

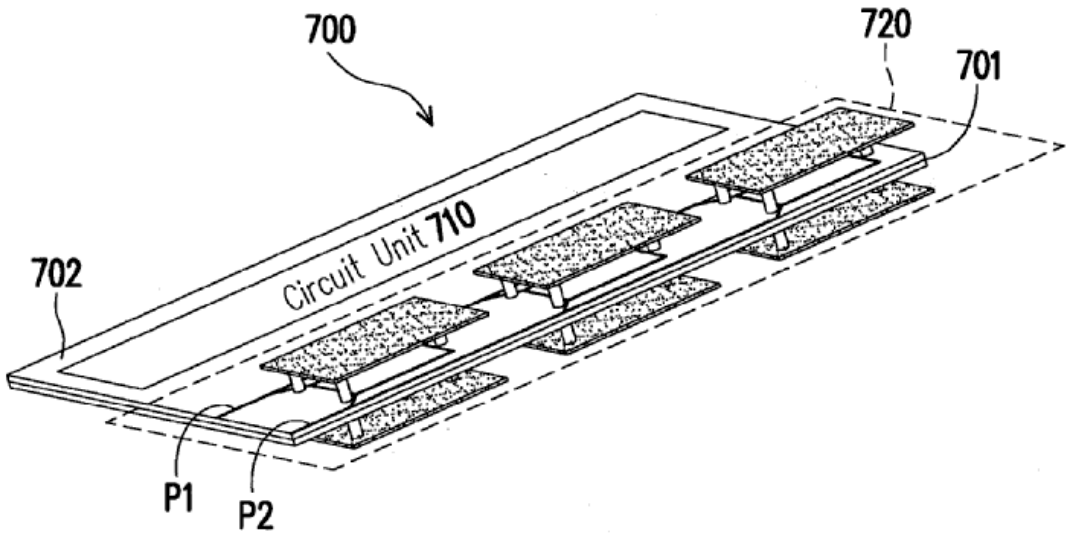

References

Limiting references

This place does not cover:

providing two patterns of opposite direction; back to back antennas	H01Q 25/004

H01Q 25/007

{using two or more primary active elements in the focal region of a focusing device (for operation on different wavebands H01Q 5/22)}

Definition statement

This place covers:

Illustrative example of subject-matter classified in this group:

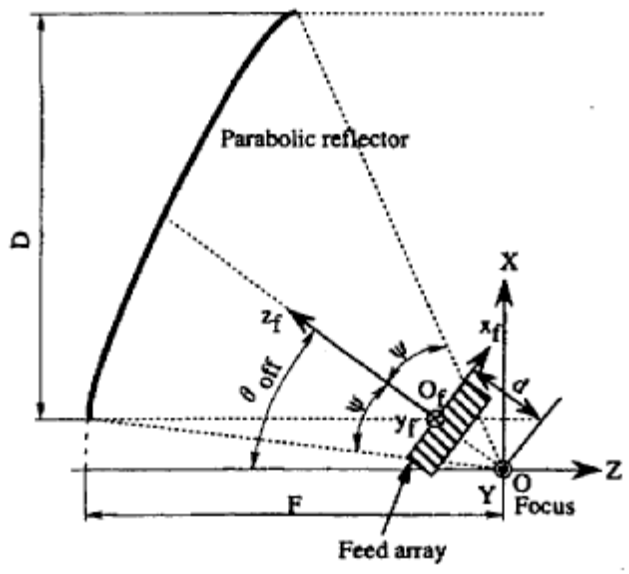

(a) Configuration of antenna.

References

Limiting references

This place does not cover:

for operation on different wavebands	H01Q 5/22

H01Q 25/008

{lens fed multibeam arrays}

Definition statement

This place covers:

Illustrative example of subject-matter classified in this group:

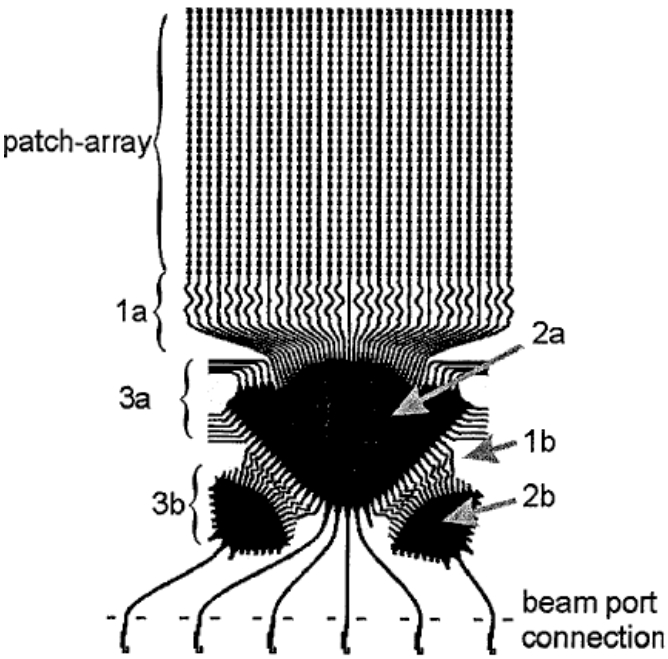

Figure 2: 77GHz muliresolutional microstrip antenna for ACC and cut-in detection; (1) delay network, (2) parallel-plate waveguide, (3) dummy

H01Q 25/02

providing sum and difference patterns (multimode aerials H01Q 25/04)

Definition statement

This place covers:

Sum pattern: a radiation pattern characterized by a single main lobe whose cross section is essentially elliptical, and a family of side lobes the latter usually at a relatively low level.

Difference pattern: a radiation pattern characterized by a pair of main lobes of opposite phase, separated by a single null, plus a family of side lobes, the latter usually desired to be at a low level.

Antennas used in many radar applications are capable of producing a sum pattern and two orthogonal difference patterns, the difference pattern can be employed to determine the position of a target in a rightlleft and up/down sense by the antenna pointing, which places the target in the null between the twin lobes of each difference pattern.

Radar system is called monopulse radar system because direction-finding information is obtainable from a single pulse A monopulse receiving system includes a monopulse circuit which receives signals from the antenna and forms sum and difference monopulse output signals. The sum and difference signals are formed by combining received antenna signals in a particular manner. The signals can be combined using circuits referred to as hybrid circuits. The monopulse sum and difference signals can

be formed either at the transmitted signal frequency or, after down conversion of a return signal, at a lower frequency.

Illustrative example of subject-matter classified in this group:

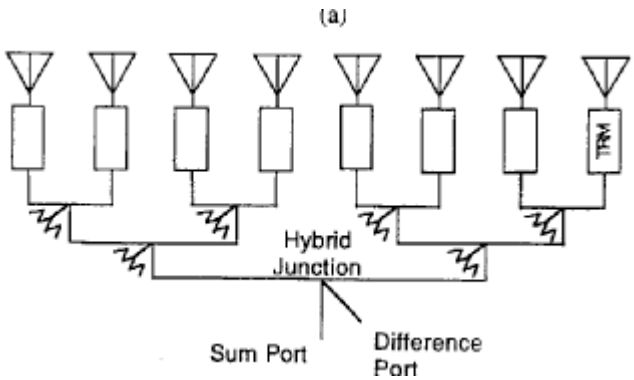

References

Limiting references

This place does not cover:

multimode aerials	H01Q 25/04

H01Q 25/04

Multimode aerials {(corrugated horns H01Q 13/0208)}

Definition statement

This place covers:

Illustrative examples of subject-matter classified in this group:

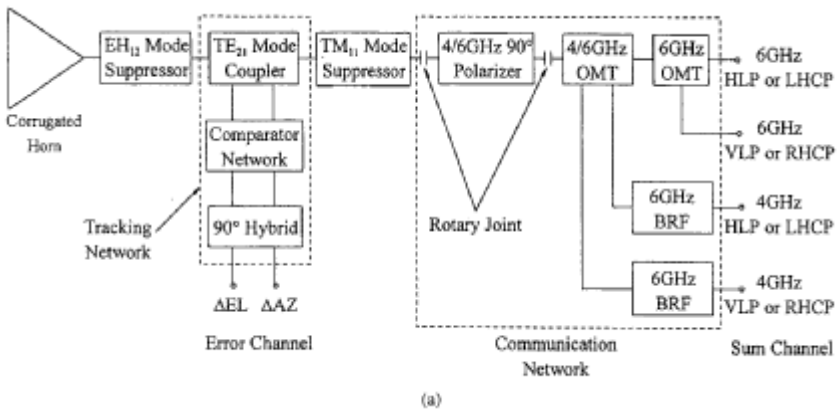

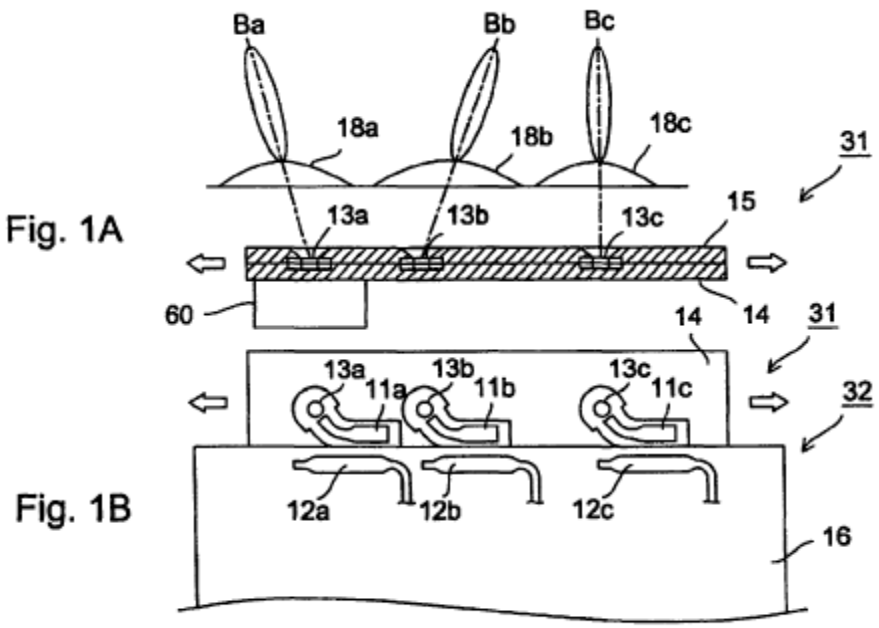

Fig. 1A

Fig. 1B

References

Limiting references

This place does not cover:

corrugated horns	H01Q 13/0208