G09G

ARRANGEMENTS OR CIRCUITS FOR CONTROL OF INDICATING DEVICES USING STATIC MEANS TO PRESENT VARIABLE INFORMATION (lighting in general F21; arrangements for displaying electric variables or waveforms G01R 3/00; devices or arrangements for the control of light beams G02F 1/00; indicating of time by visual means G04B 19/00, G04C 17/00, G04G 9/00; arrangements for transferring data between computers and peripheral equipment G06F 3/00; visible signalling arrangements or devices G08B 5/00; traffic control systems G08G; display, advertising, signs G09F, e.g. static indicating arrangements comprising an association of a number of separate sources or light control cells G09F 9/00; static indicating arrangements comprising integral associations of a number of light sources H01J, H01K, H01L, H05B 33/12; circuits in pulse counters for indicating the result H03K 21/18; coding, decoding or code conversion, in general H03M; reproducing a picture or pattern using electric signals representing parts thereof and produced by scanning an original H04N)

Definition statement

This place covers:

- Arrangements or circuits for processing control signals to achieve the display, e.g. for the reception, storage, regeneration, coding, decoding, format manipulation, addressing of control signals.
- Solution of problems of displays by means of their control, i.e. control for which features of a display are relevant, e.g. to compensate for varying pixel behaviour, which may lead to non-uniformity in the display.
- Improvements of the control of displays, i.e. where the functionality of controlling a display is relevant, e.g. selective brightness adaptation for lowering energy consumption of the display, possibly after image analysis.
- The visual effect in the indicating means using the static means may be produced by the generation of an image on a screen, e.g. indirectly by scanning an electron beam onto a luminescent screen, directly by controlled light sources, by projection of light from controlled light sources or light modulators onto characters, symbols, or elements thereof drawn on a support, or by electric, magnetic, or mechanic control of the parameters of light rays from an independent source.

Relationships with other classification places

With regard to subclass H04N (pictorial communication, e.g. television) and subclass G06T (image data processing or generation, in general), this subclass covers electronic control of display characterized by the display device itself, whereas it does not cover:

- electronic control characterized by the pictorial communication which is covered by H04N, or
- aspects like rastering an image onto the target resolution by a raster image processor (RIP), or image enhancement aspects like augmented reality, which are covered by G06T.

With regard to group G06F 9/00, this subclass does not cover software modules, e.g. software driver modules for the display, or their interaction, such as interaction between software modules related to the display of windows or interaction between a software driver module for the display and the operating system (covered by G06F 9/00).

References

Limiting references

This place does not cover:

Micro-structural devices comprising flexible or deformable elements , e.g. displays comprising elastic micro-tongues or membranes	B81B 3/00
Optical devices or arrangements using movable or deformable optical elements for controlling the intensity, colour, phase, polarisation or direction of light, e.g. switching, gating, modulating, e.g. displays based on interference in an adjustable optical cavity	G02B 26/00
Optical devices or arrangements using movable or deformable optical elements for controlling the intensity of light, e.g. displays based on the rotation of particles under the influence of an external field, e.g. twisting microsphere displays (gyricons®)	G02B 26/02
Optical devices or arrangements using movable or deformable optical elements for controlling the direction of light, e.g. displays using a reflecting micromechanical device, like a MEMS mirror, DMD	G02B 26/08
Devices or arrangements for the control of the intensity, phase, polarisation or colour of light arriving from an independent light source based on liquid crystals, e.g. single liquid crystal display cells	G02F 1/13
Devices or arrangements for the control of the intensity, phase, polarisation or colour of light arriving from an independent light source based on electrochromic elements, e.g. electrochromic displays	G02F 1/15
Devices or arrangements for the control of the intensity, phase, polarisation or colour of light arriving from an independent light source based on electrophoresis, e.g. electrophoretic displays	G02F 1/167
Projectors and projection type viewers adapted for projection of either still pictures of motion pictures	G03B 21/12
Digital output to display device	G06F 3/14
Indicating arrangements being the ends of optical fibres for variable information in which the information is built-up on a support in which the desired character or characters are formed by combining individual elements	G09F 9/305
Indicating arrangements being incandescent filaments for variable information in which the information is built-up on a support in which the desired character or characters are formed by combining individual elements	G09F 9/307
Indicating arrangements being gas discharge devices for variable information in which the information is built-up on a support in which the desired character or characters are formed by combining individual elements, e.g. plasma display panels	G09F 9/313
Indicating arrangements being semiconductor devices for variable information in which the information is built-up on a support in which the desired character or characters are formed by combining individual elements, e.g. light emitting diode displays	G09F 9/33
Indicating arrangements being liquid crystals for variable information in which the information is built-up on a support in which the desired character or characters are formed by combining individual elements, e.g. liquid crystal displays	G09F 9/35
Plasma display panels	H01J 11/00, H01J 17/49

Cathode ray tubes	H01J 31/00
Devices consisting of a plurality of semiconductor or other solid-state component formed in or on a common substrate, specially adapted for light emission, e.g. light emitting diode displays	H01L 27/15
Solid state devices using organic materials as the active part specially adapted for light emission, e.g. displays using OLED or PLED	H01L 51/50
Scanning, transmission or reproduction of documents or the like, e.g. facsimile transmission; Details thereof	H04N 1/00
Scanning details of television systems	H04N 3/00
Projection arrangements for image reproduction	H04N 5/74
Details of colour television systems	H04N 9/00
Projection devices for colour picture display	H04N 9/31
Colour television systems	H04N 11/00
Stereoscopic television systems	H04N 13/00, **H04N15/00**
Electroluminescent light sources	H05B 33/00
Circuit arrangements for electric light sources in general	H05B 37/00
Assembling printed circuits with electric components, e.g. with resistor, displays consisting of a printed circuit board carrying a matrix of single LEDs	H05K 3/30

Informative references

Attention is drawn to the following places, which may be of interest for search:

Diagnosis; Surgery, Identification	A61B
Arrangement or adaptations of instruments in vehicles	B60K 35/00
Equipment for fitting in or to aircraft	B64D
Combined instruments indicating more than one navigational value, e.g. for aircraft	G01C 23/00
Cathode-ray oscilloscopes	G01R 13/20
Optical scanning systems	G02B 26/10
Image data processing or generation, in general	G06T
Digital stores in which the information is moved stepwise, e.g. shift registers	G11C 19/00

Special rules of classification

Classification of invention information and additional information is obligatory.

Indexing Code symbols of the type G09G2xx represent information orthogonal to one or to more than one ECLA group and should be used to classify information relevant for the invention, although it need not be invention information.

Glossary of terms

In this place, the following terms or expressions are used with the meaning indicated:

Indicating device	Display device
To present	To display

Variable information	Information with variable content
Static means to display information	Means not using movement of macroscopic parts for information build-up, e.g. displays using LCDs, LEDs, DMDs, ... for image build-up

Synonyms and Keywords

In patent documents, the following abbreviations are often used:

CRT	Cathode Ray Tube
LCD	Liquid Crystal Display
AC-PDP	Alternate Current Plasma Display Panel
DC-PDP	Direct Current Plasma Display Panel
LED	Light Emitting Diode
OLED	Organic Light Emitting Diode
MEMS	Micro Electro-Mechanical System
DMD	Digital Micro Mirror Device

G09G 1/00

Control arrangements or circuits, of interest only in connection with cathode-ray tube indicators; {General aspects or details, e.g. selection emphasis on particular characters, dashed line or dotted line generation; Preprocessing of data} (cathode-ray oscilloscopes G01R 13/20; {radar display arrangements G01S 7/04; display of digital non-picture data in television systems H04N 7/0255})

Definition statement

This place covers:

- Control arrangements or circuits, of interest only in connection with cathode-ray tube indicators;
- General aspects or details, e.g. selection emphasis on particular characters, dashed line or dotted line generation;
- Preprocessing of data therefor.

References

Limiting references

This place does not cover:

Adaptations for aircraft instruments	B64D 43/00
Aircraft flight instrument display	G01C 23/005
Cathode-ray oscilloscopes	G01R 13/20
Radar display arrangements display of digital non-picture data in television systems	G01S 7/04, H04N 7/0255
Television	H04N

Special rules of classification

Illustrative examples: EP0431581 (otatable display, change of orientation of a video display; see also appropriate groups related to details specific for rotatable display arrangements, e. g. G09G 1/04 for related adaptation of deflection circuits):

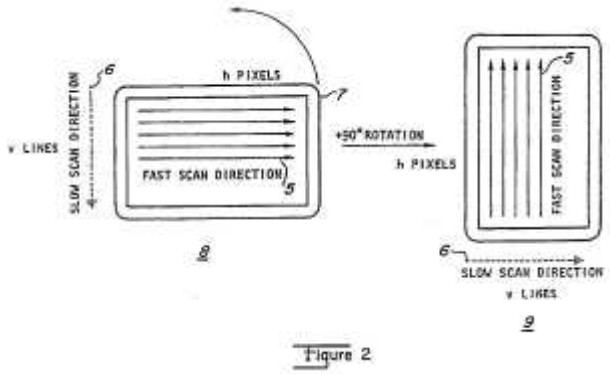

US4910785 (displaying code data and image data):

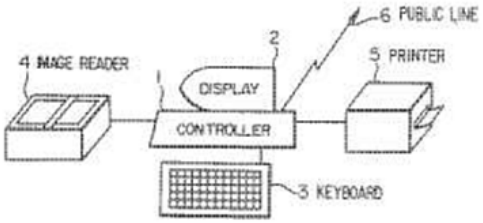

US5493336 (waiting state function):

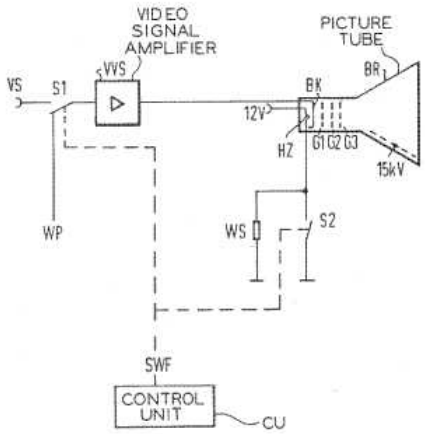

G09G 1/002

{Intensity circuits (G09G 1/06 - G09G 1/28 take precedence)}

Definition statement

This place covers:

Control of the intensity of the electron beam in a CRT both directly (by control of the electron gun) and indirectly (by control of a signal having effect on the beam intensity), e. g. for brightness or contrast adjustment.

References

Limiting references

This place does not cover:

Using single beam tubes	G09G 1/06
Using multi-beam tubes	G09G 1/20
Using using tubes permitting selection of a complete character from a number of characters	G09G 1/22
Using tubes permitting selection of individual elements forming in combination a character	G09G 1/24
Using storage tubes	G09G 1/26
Using colour tubes	G09G 1/28

Informative references

Attention is drawn to the following places, which may be of interest for search:

Intensity circuits applicable to both CRT and panel displays	G09G 5/10
Control of the overall brightness of a display	G09G 2320/0626
Control of intensity of electron beams in oscilloscopes	G01R 13/26
Control of intensity of electron beams in televisions	H04N ; H04N 5/59 , H04N 5/68

Special rules of classification

Illustrative examples: DE1212325 (brightness adjustment of characters and Lissajous curves by phase shift at a pulse):

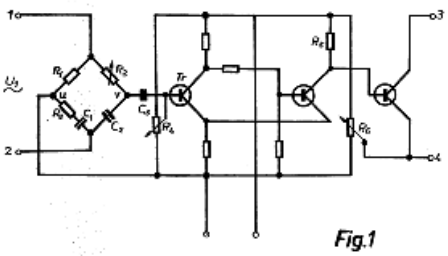

Fig.1

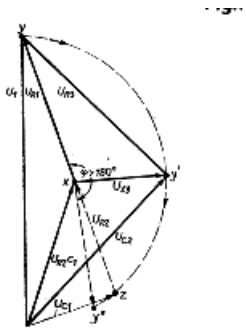

Fig.2

FR2691032 (brightness and contrast adjustment):

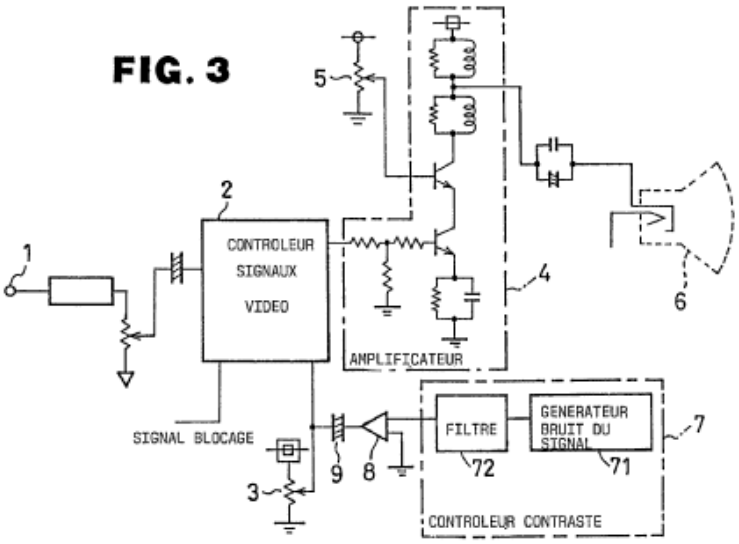

WO9905666 (generation of a higher luminance video window):

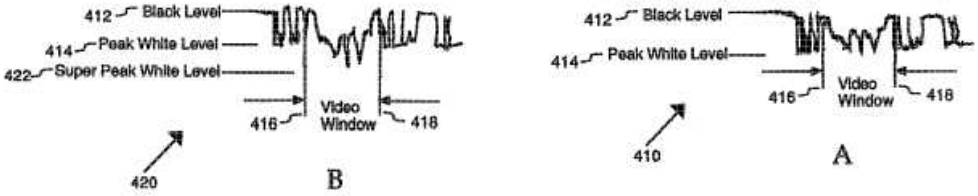

US5504462 (control of an intensity pulse signal in relation to pixel clock in a CRT or in a laser beam printer):

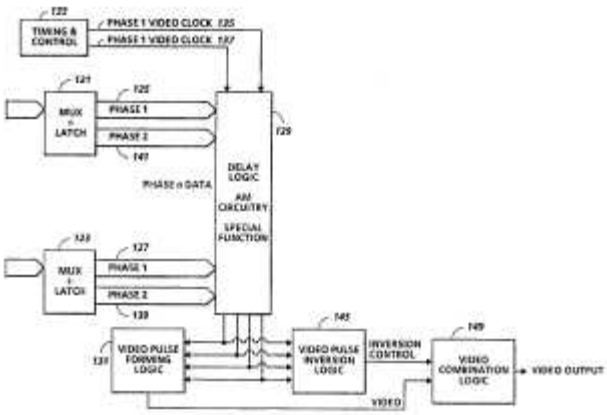

EP0840272 (feedback adjustment of the electron beam current):

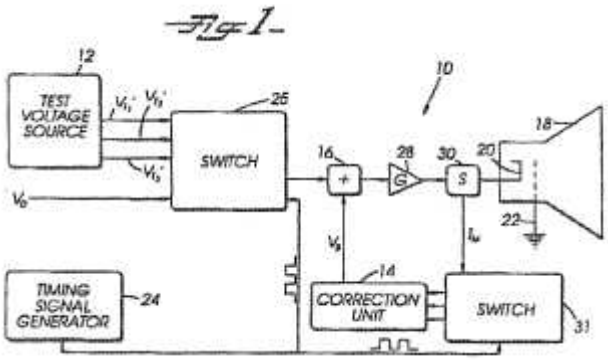

US5786669 (FED emitters used just to produce the electron beam in a CRT; beam intensity controlled by the number of active microtips):

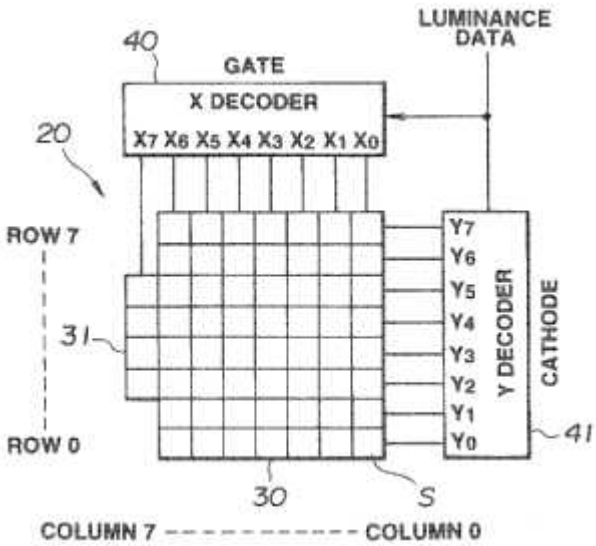

G09G 1/005

{Power supply circuits}

Definition statement

This place covers:

- Circuits for power management specific for CRTs;
- Details of power supply specific for CRTs.

Illustrative examples:

Special power supply for deflection amplifiers: US3863099.

Power control for user protection from EM radiation and excessive optical brightness: US5521652.

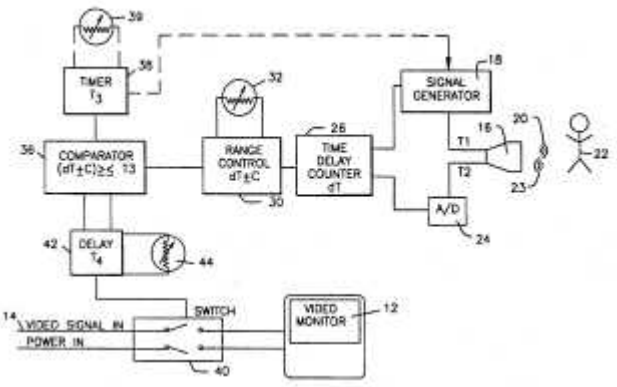

From X-rays: DE29900611U.

Power control for energy saving, to synchronize with computer standby / shutdown for an LCD, possibly applicabale also to a CRT: EP0863455.

FIG.3

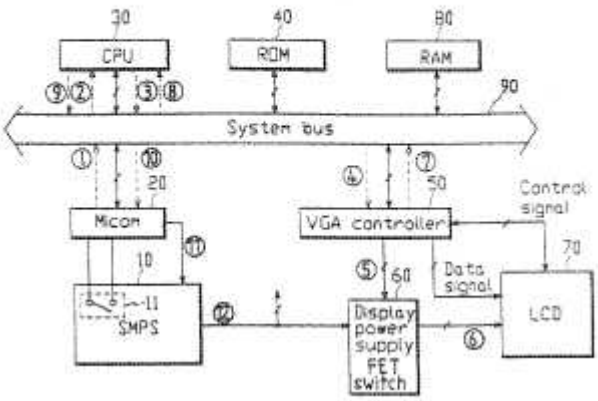

In combination with a soft power switch: US6092206.

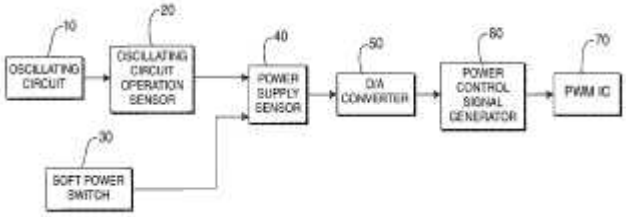

Details of power control of cathode heater: US6084355.

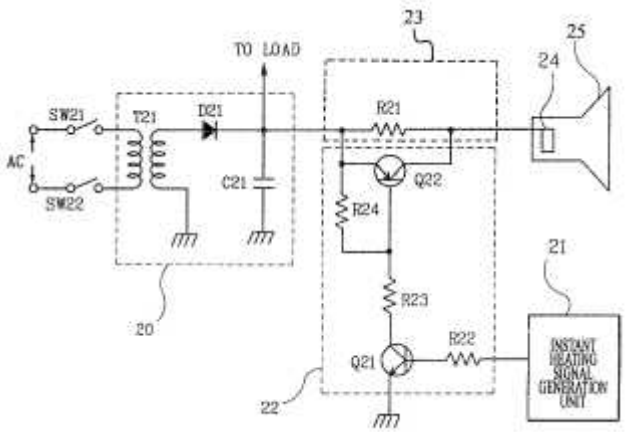

References

Limiting references

This place does not cover:

Power supply in general	G05F 3/00

Special rules of classification

Use the Indexing Codes G09G 2330/021 - G09G 2330/024 for power management.

G09G 1/007

{Circuits for displaying split screens}

Definition statement

This place covers:

Independent management of multiple screen areas in positions that are not quickly varied by an user interface (e. g. with a fixed tiling), e. g. with use of linked row pointers for controlling the screen partition and / or scrolling, e. g. using hardware mechanisms specific for CRTs.

Illustrative examples: to change the displayed information by activating different parts of the screen: EP0680776:

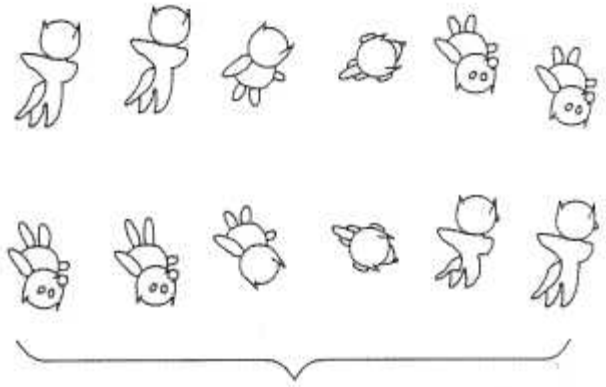

FIG.–17

Systems for plural display areas on one screen tiling in x and y directions according to a descriptor data collection, but without user interface: EP0200036.

With hardware control of the video screen in different areas: US2006044216.

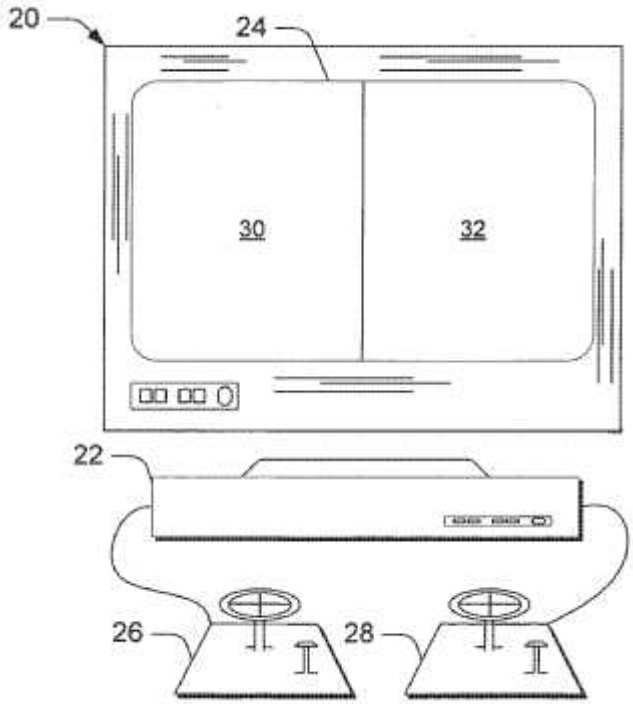

Same as above: US4550386.

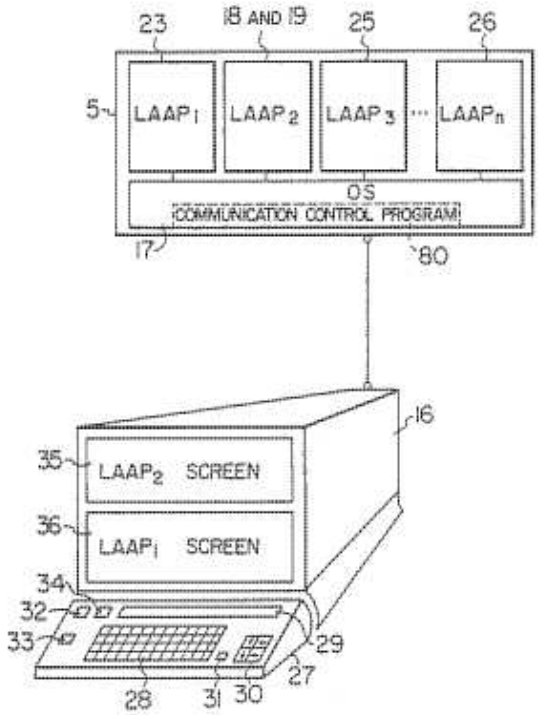

Hardware control of a text area and of a screen area with a character menu: EP0274439.

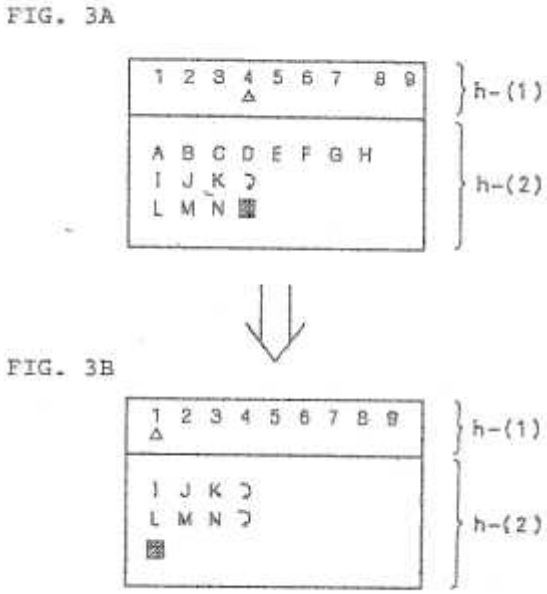

Systems with divided screen in two halves of the screen used by different users: EP0018759.

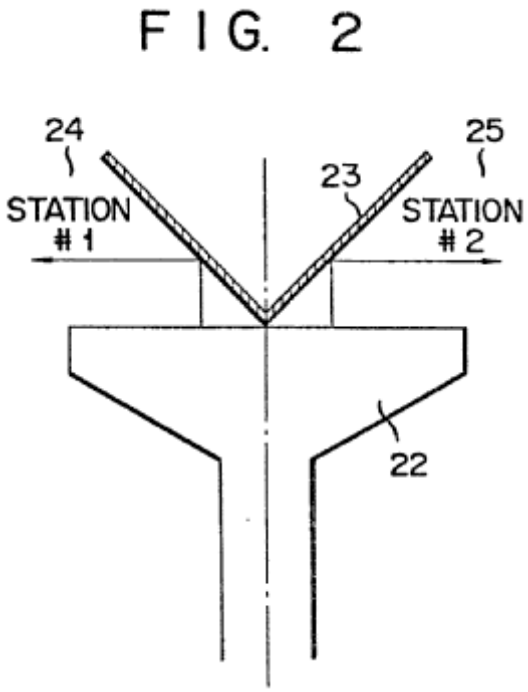

References

Informative references

Attention is drawn to the following places, which may be of interest for search:

Multiple view displays	G09G 3/001
Display of multiple viewports (such as windows)	G09G 5/14
Split matrices (D.A: be careful. This is not really related.)	G09G 2310/0221
One image signal (VGA) contains plural images; a splitter divides and provides to plural displays	G06F 3/1431, G06F 3/1423
Split screen control with user interaction	G06F 2203/04803

G09G 1/02

Storage circuits (G09G 1/06 - G09G 1/28 take precedence)

Definition statement

This place covers:

Display buffer/memory management; multiple monitors or variable display arrangements.

Illustrative examples: DE3607474

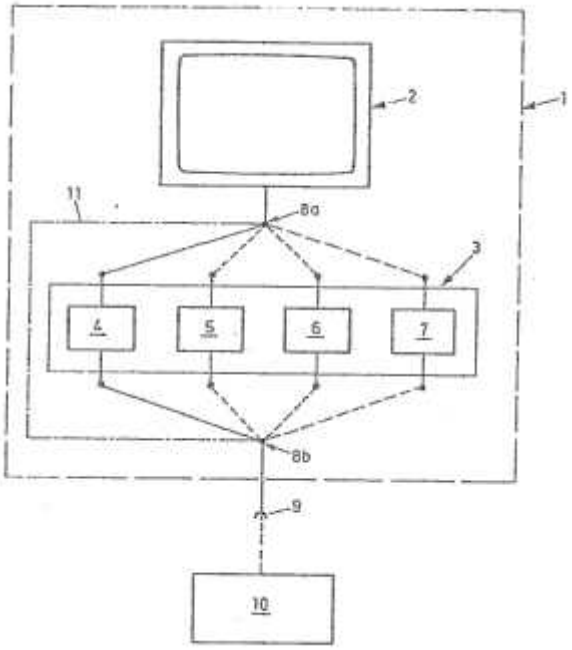

FR2559933

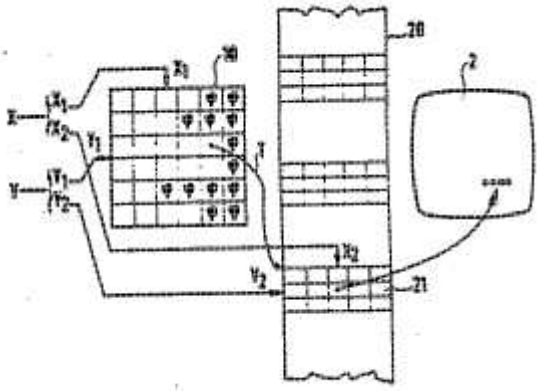

US4618858

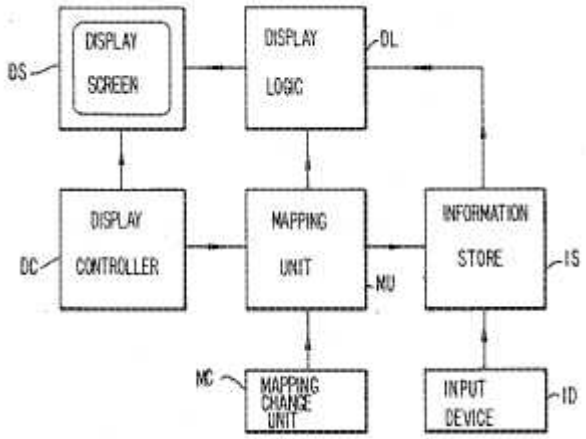

Character generation system: EP0053661.

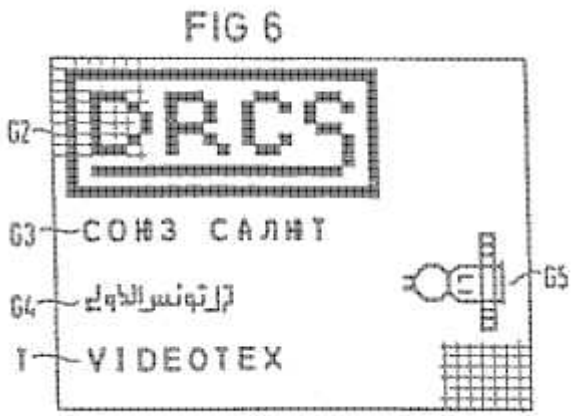

References

Limiting references

This place does not cover:

Using single beam tubes	G09G 1/06
With combined raster scan and calligraphic display	G09G 1/07
The beam directly tracing characters, the information to be displayed controlling the deflection	G09G 1/08
The deflection signals being produced by essentially digital means, e.g. incrementally	G09G 1/10
The deflection signals being produced by essentially analogue means	G09G 1/12
The beam tracing a pattern independent of the information to be displayed, this latter determining the parts of the pattern rendered respectively visible and invisible	G09G 1/14
Circuits for displaying horizontal and vertical lines	G09G 1/143
Flicker reduction circuits	G09G 1/146

The pattern of rectangular co-ordinates extending over the whole area of the screen, i.e. television type raster	G09G 1/16
For displaying digital inputs as analog magnitudes, e.g. curves, bar graphs, coordinate axes, singly or in combination with alpha-numeric characters	G09G 1/162
Details of a display terminal using a CRT, the details relating to the control arrangement of the display terminal and to the interfaces thereto	G09G 1/165
Details of the interface to the display terminal specific for a CRT	G09G 1/167
A small local pattern covering only a single character, and stepping to a position for the following character, e.g. in rectangular or polar co-ordinates, or in the form of a framed star	G09G 1/18
Using multi-beam tubes	G09G 1/20
Using tubes permitting selection of a complete character from a number of characters	G09G 1/22
Using tubes permitting selection of individual elements forming in combination a character	G09G 1/24
Using storage tubes	G09G 1/26
Using colour tubes	G09G 1/28

Informative references

Attention is drawn to the following places, which may be of interest for search:

Storage tubes (the storage effect being realized by means of the tube)	G09G 1/26

G09G 1/04

Deflection circuits {Constructional details not otherwise provided for (electron-optical arrangements H01J 29/46, H01J 37/04, H01J 37/302)}

Definition statement

This place covers:

Details of deflection circuits specific for computer generated displays (in absence of indications of features that render a deflection circuit so specific, not to be classified in G09G).

Illustrative examples:

Deflection circuits for distortion correction: US5070281.

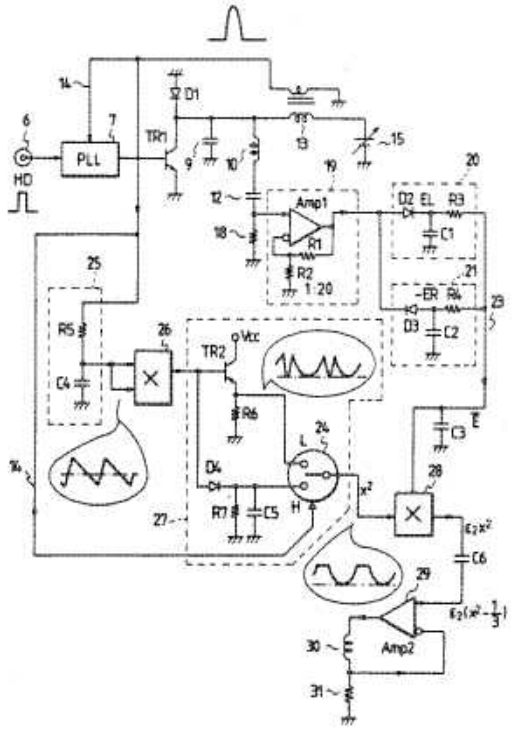

GB1285554

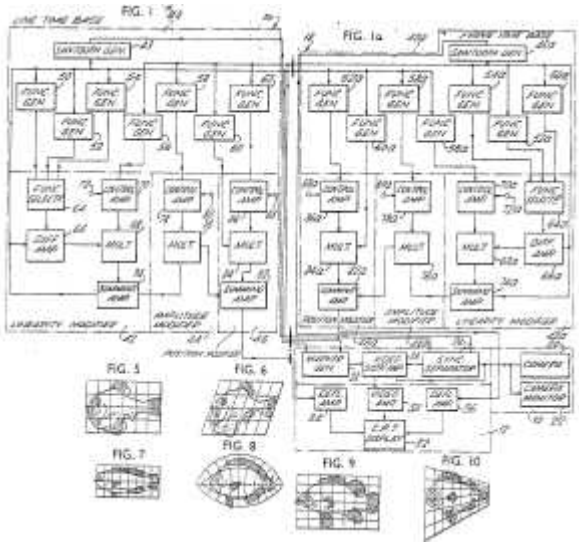

DE19529448

FIG. 4

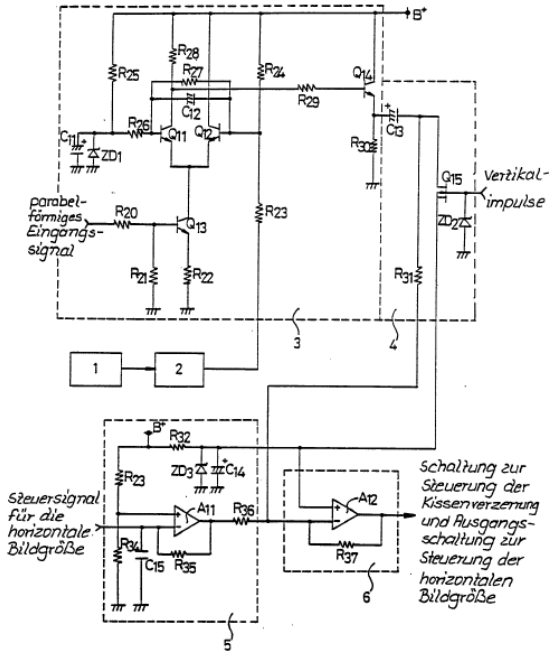

Deflection in specially designed CRTs in a laser CRT with reduced beam diameter: US2002057384.

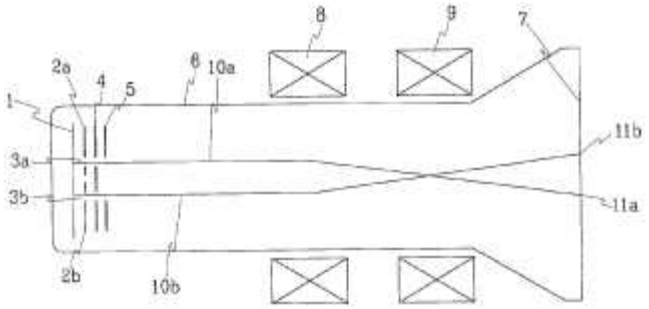

Sinusoidal deflection current for bidirectional scanning: GB2157136.

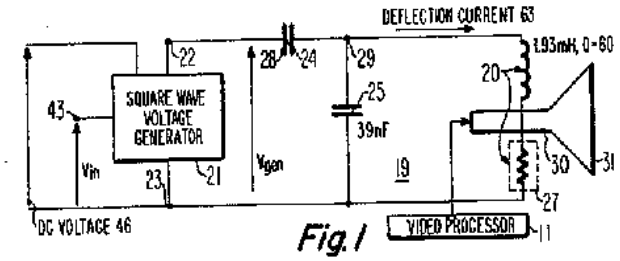

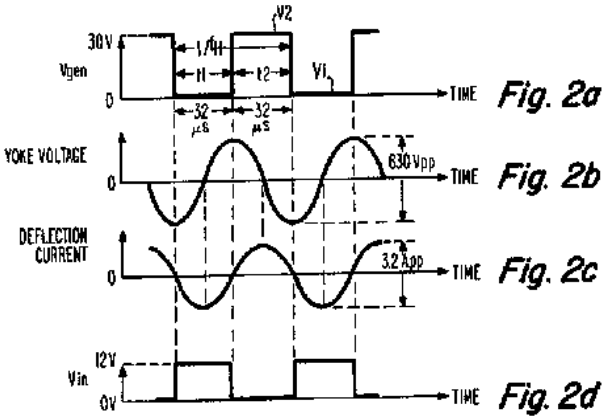

References

Informative references

Attention is drawn to the following places, which may be of interest for search:

Arrangements of electrodes and associated parts for generating or controlling the ray or beam, e.g. electron-optical arrangement.	H01J 29/46
Arrangements for deflecting ray or beam; circuit arrangements for producing saw-tooth pulses or other deflecting voltages and currents.	H01J 29/70
Arrangements of electrodes and associated parts for generating or controlling the discharge, e.g. electron-optical arrangement, ion-optical arrangement.	H01J 37/04
Controlling tubes by external information, e.g. programme control.	H01J 37/302
Generating pulses having essentially a finite slope or stepped portions ^.	H03K 4/00
Manipulating pulses having a finite slope and not covered by one of the other main groups of this subclass.	H03K 6/00
Details of scanning of a TV system, by deflecting an electron beam in a CRT (includes documents for which the use in a TV or in a computer monitor is not specified)	H04N 3/16
Prevention of damage of the CRT in the event of failure of scanning	H04N 3/20

G09G 1/06

using single beam tubes (G09G 1/26, G09G 1/28 take precedence), {e.g. three-dimensional or perspective representation, rotation or translation of display pattern, hidden lines, shadows (G09G 1/28 takes precedence; stereoscopic TV-systems, details thereof H04N 13/00; oscilloscopes for three-dimensional representation G01R 13/206; vectorscopes G01R 13/208)}

Definition statement

This place covers:

Three-dimensional or perspective representation, rotation or translation of display pattern, hidden lines, shadows automatic brightness compensation half-tone display.

Illustrative examples:

Three-dimensional or perspective representation: EP0458692.

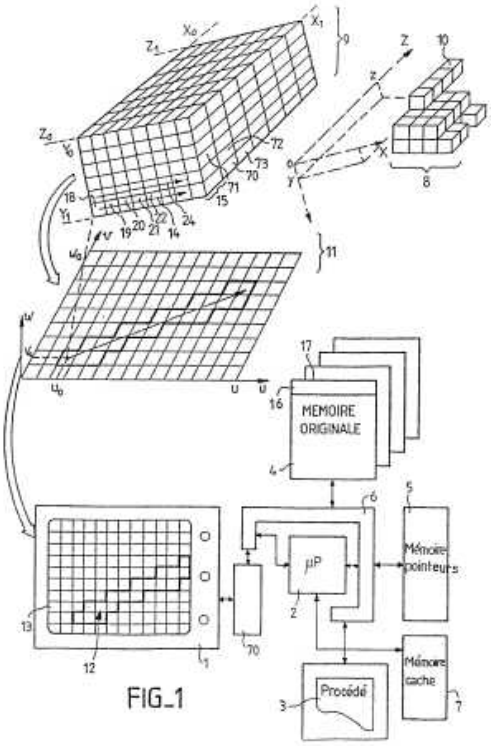

FIG_1

US4821210

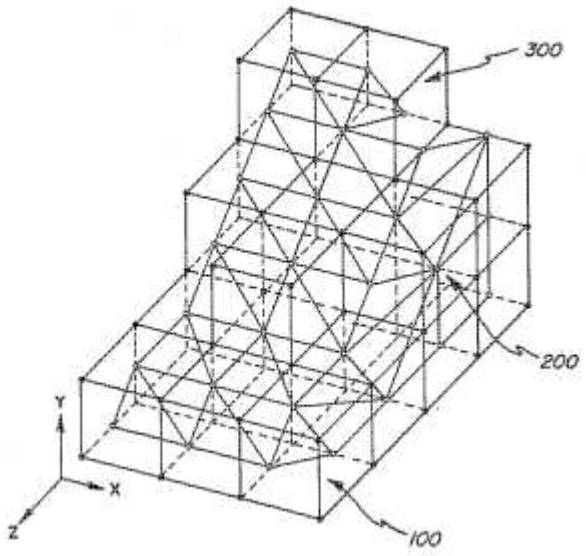

US4841292

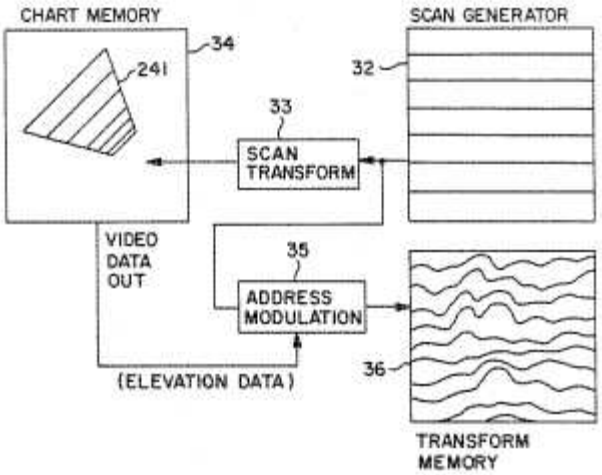

US3889107

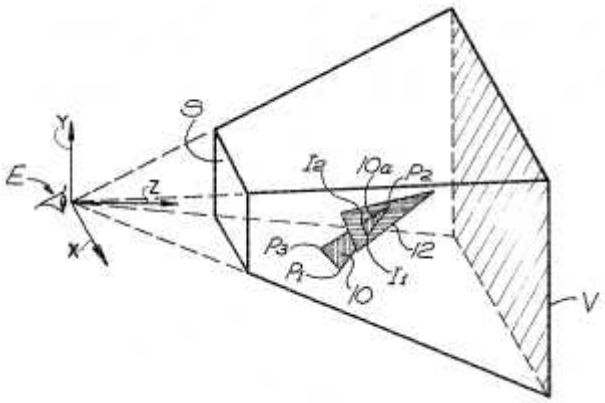

Display that involves the spectator to use special glasses: DE4417664, US5162779.

GB2308284

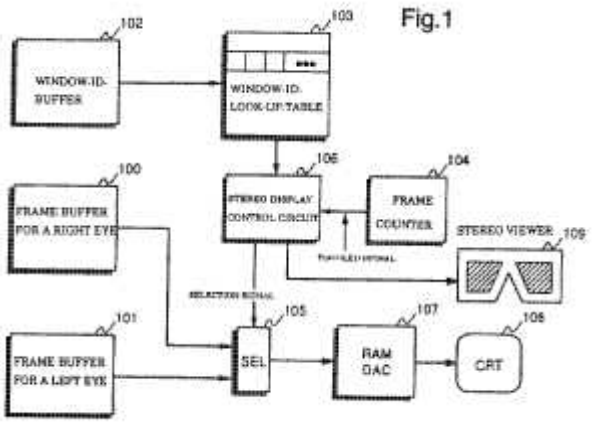

References

Limiting references

This place does not cover:

Using storage tubes	G09G 1/26
Using colour tubes. Note: The usual kind of colour tubes with one beam per colour (usually RGB), each beam being individually controlled in intensity but all beams being commonly deflected, are considered as "single beam tubes" unless colour specifique details are disclosed	G09G 1/28

Informative references

Attention is drawn to the following places, which may be of interest for search:

Control of overall brightness	G09G 2320/0626
Aircraft flight instrument display	G01C 23/005
Oscilloscopes for three-dimensional representation	G01R 13/206
Vectorscopes	G01R 13/208
Image rendering, image processing	G06T
Stereoscopic TV-systems, details thereof	H04N 13/00

G09G 1/07

with combined raster scan and calligraphic display

Definition statement

This place covers:

CRTs combining a vector stroke display with a raster scan display, mostly superimposed.

Illustrative examples:

EP0158480

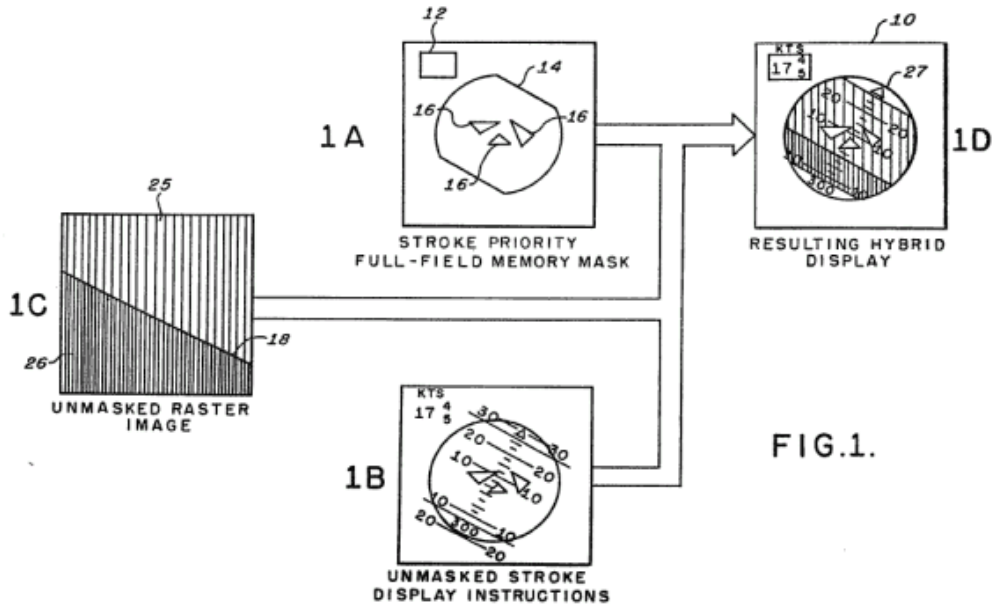

FIG.1.

EP0043703

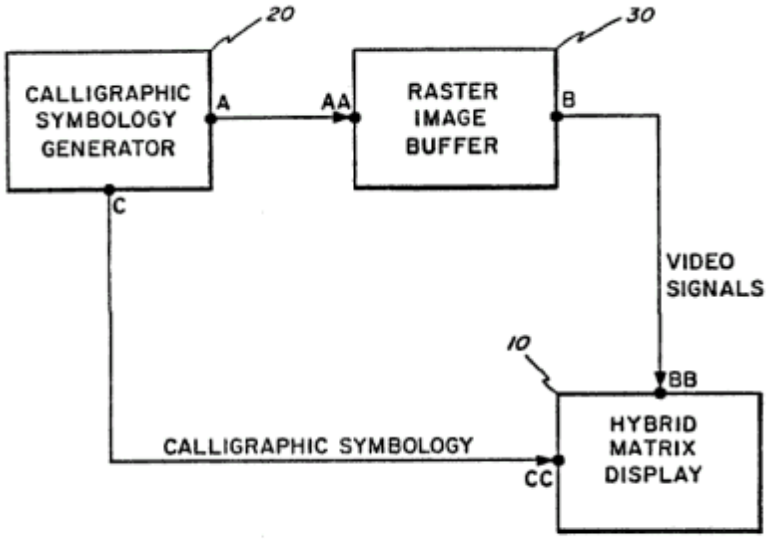

FIG. 1

References

Informative references

Attention is drawn to the following places, which may be of interest for search:

CRTs having only vector stroke display	G09G 1/08
CRTs having only raster scan display	G09G 1/14

Special rules of classification

Raster displays with stroke-to-raster conversion are also placed in this class.

G09G 1/08

the beam directly tracing characters, the information to be displayed controlling the deflection {and the intensity} as a function of time in two spatial co-ordinates, e.g. according to a cartesian co-ordinate system

Definition statement

This place covers:

CRTs with vector stroke displays.

Illustrative examples:

Curve and line generators.

Curve generator: EP0288720.

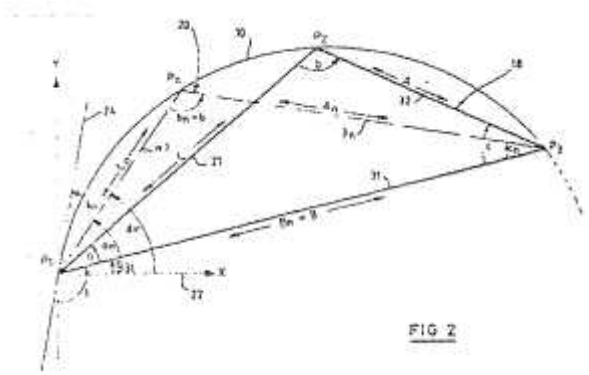

Digital technique for constructing variable width lines: US4601002.

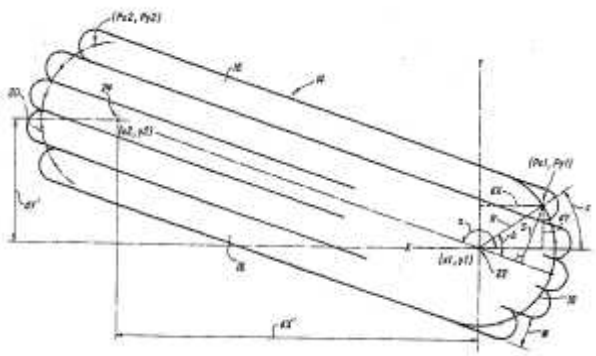

Enhancement of the resolution of end points of a line: US4939673.

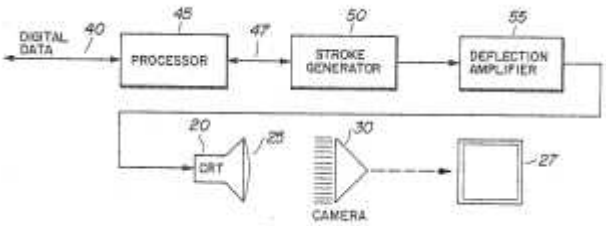

Character generators specific for vector stroke displays, without reference to a specific digital or analog deflection technique.

Stroke writing character apparatus and method: EP0138339.

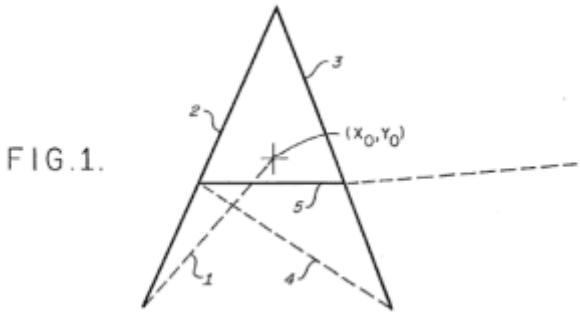

Video compensation apparatus.

Compensation of the delay between X and Y (deflection) channels and Z (intensity) channel in a stroke mode CRT display: US5047756.

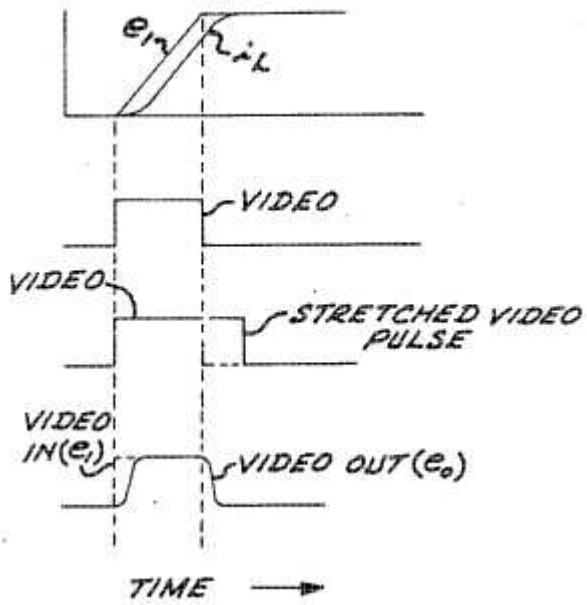

Slew length timer for the determination of the time interval between start and end of a segment on the display: EP0108473.

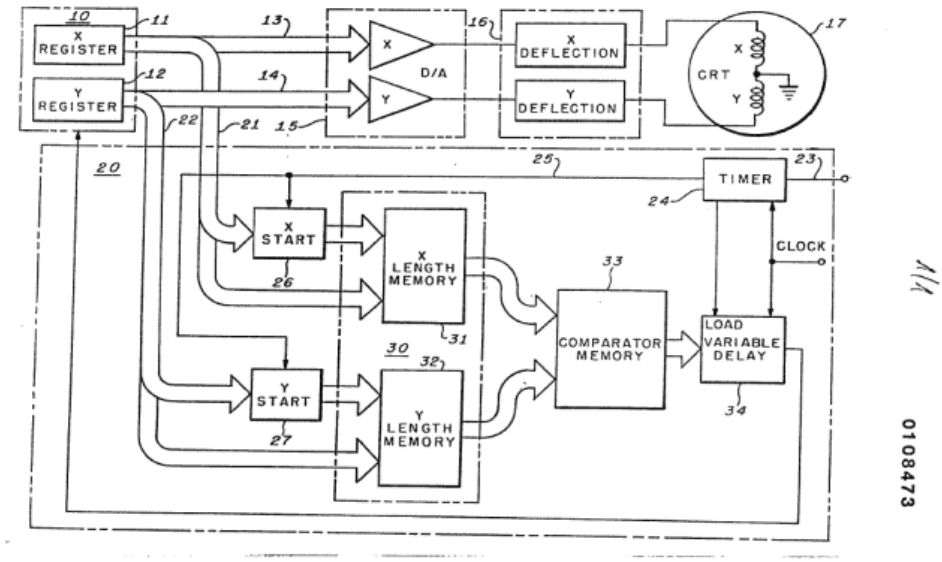

References

Informative references

Attention is drawn to the following places, which may be of interest for search:

Function generators (e.g. Circles and vectors for bit-mapped displays), eventually combined with smoothing	G09G 5/20
Writing vectors into a bit-mapped memory	G09G 5/393
General purpose image data processing	G06T

G09G 1/10

the deflection signals being produced by essentially digital means, e.g. incrementally

Definition statement

This place covers:

For example:

Digital generation of character segments: FR2095711.

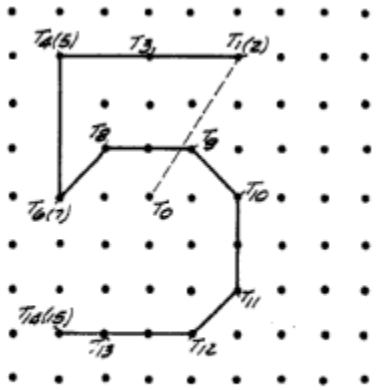

FIG. 6.

EP0130245

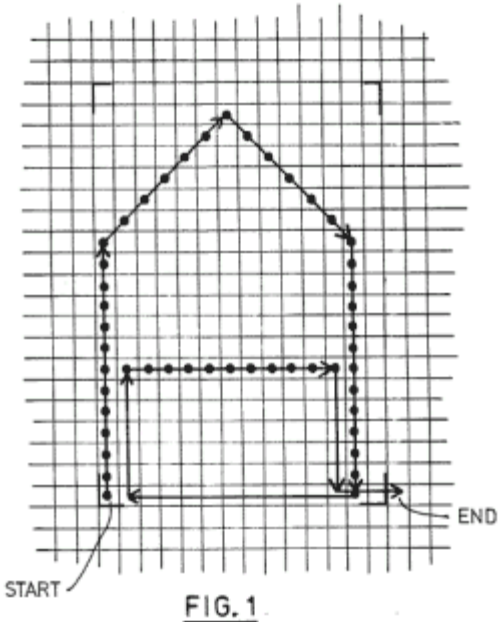

FIG. 1

With introduction of a digital value to define stroke curvature: US3594756.

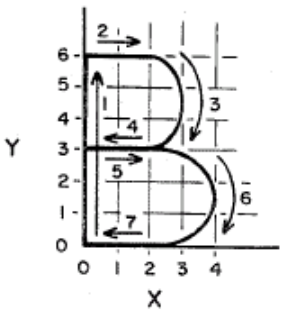

Fig. 3b

STROKE	COORDINATES X, Y → X', Y'	INTEN.	CURVE	
1	0,0 → 0,6	3	0	
2	0,6 → 2,6	1	0	
3	2,6 → 2,3	2	1	R
4	2,3 → 0,3	1	0	
5	0,3 → 2,3	0	0	
6	2,3 → 2,0	3	2	R
7	2,0 → 0,0	1	0	
8	0,0 → 0,0	0	0	

Fig. 3c

Line and curvature drawing.

Line generator based on Bresenham's algorithm: GB2207839.

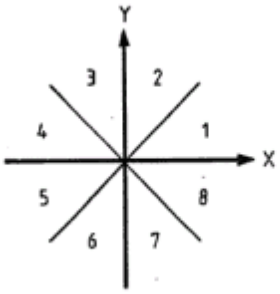

FIG. 1

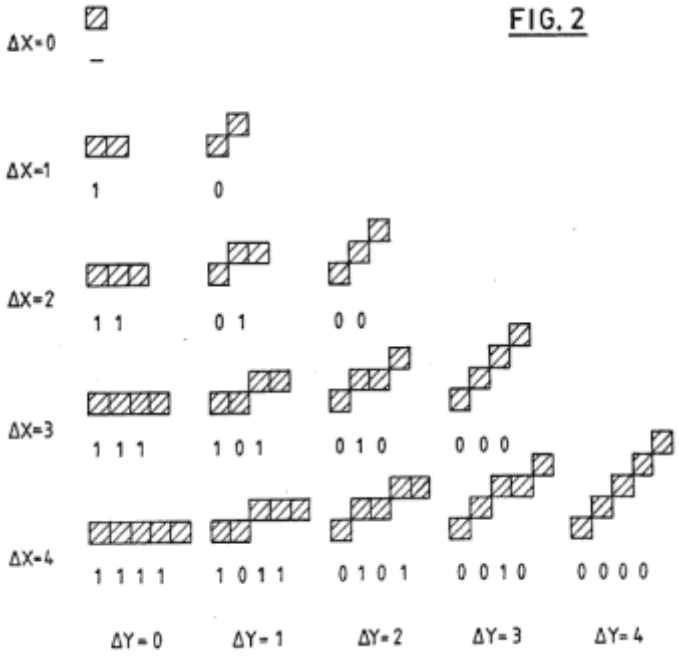

FIG. 2

Wide line drawing: EP0229693.

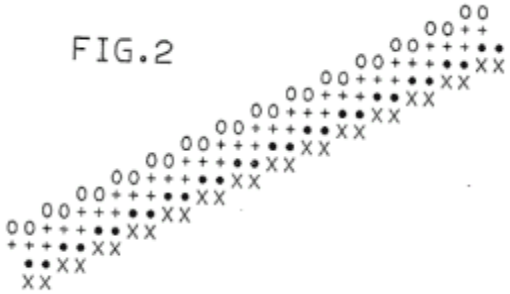

Curve stroke drawing: EP0014127.

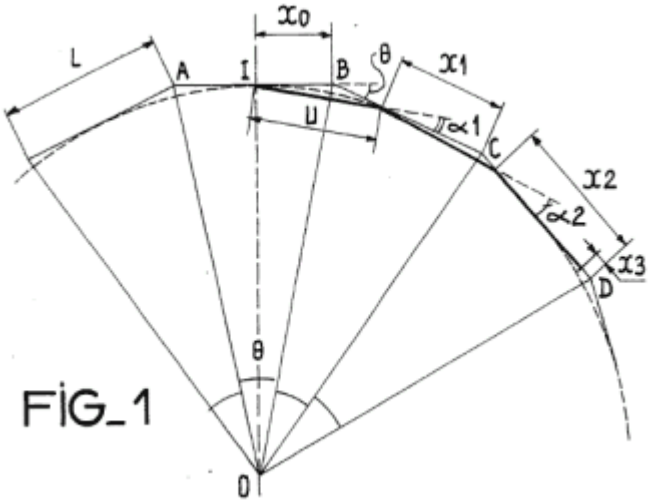

FIG_1

G09G 1/12

the deflection signals being produced by essentially analogue means

Definition statement

This place covers:

For example:

Graphic data transcription apparatus using a writing plate: US3632874.

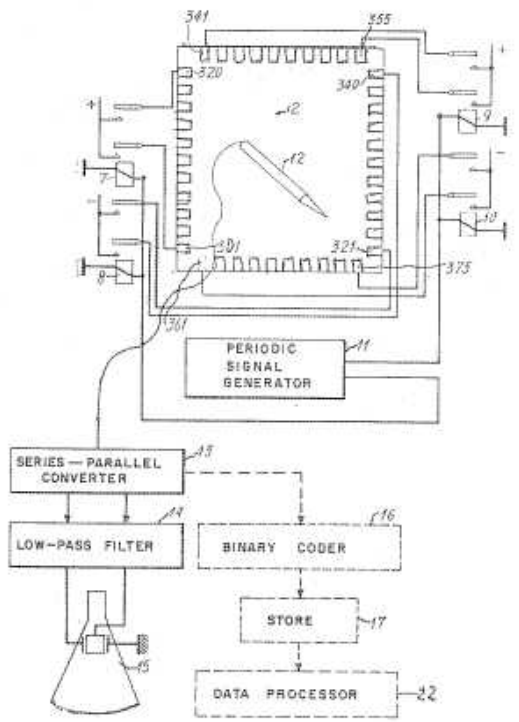

Use of a carrier drift arrangement to generate waveforms used for deflection in vector stroke displays: US3025342.

G09G 1/143

{Circuits for displaying horizontal and vertical lines}

Definition statement

This place covers:

For example: GB2040146, FR2249597.

G09G 1/146

{Flicker reduction circuits}

Definition statement

This place covers:

Illustrative example of subject matter classified in this group (DE3301103)

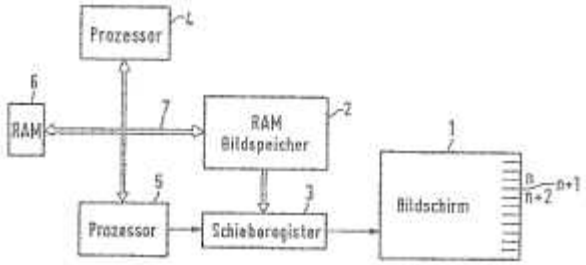

References

Informative references

Attention is drawn to the following places, which may be of interest for search:

Flicker reduction in television systems	H04N 7/0132
Flicker reduction	**S09G202/06**

G09G 1/16

the pattern of rectangular co-ordinates extending over the whole area of the screen, i.e. television type raster

Definition statement

This place covers:

- interfacing with monochrome display monitors;
- video signals (e.g. camera signals) combined with display data (e.g. computer display data);
- multisync monitor;
- CRT adapter for multiple CRT types;
- variable format in general;
- bidirectional scan;
- video mixer;
- scrambling of video signals;
- inversion control e.g. with a switch: black on white or white on black
- monochrome ==> monochrome with LUTs;
- coupling details display card <=> monitor.

Illustrative examples:

Screen saver: DE4142894.

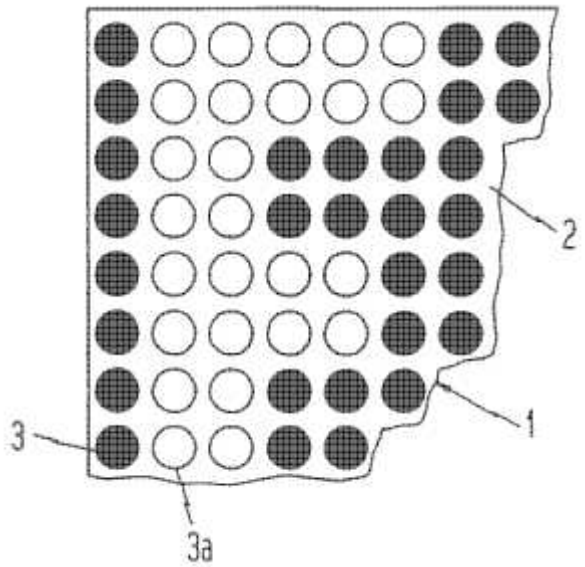

Graphics display system: WO8906415.

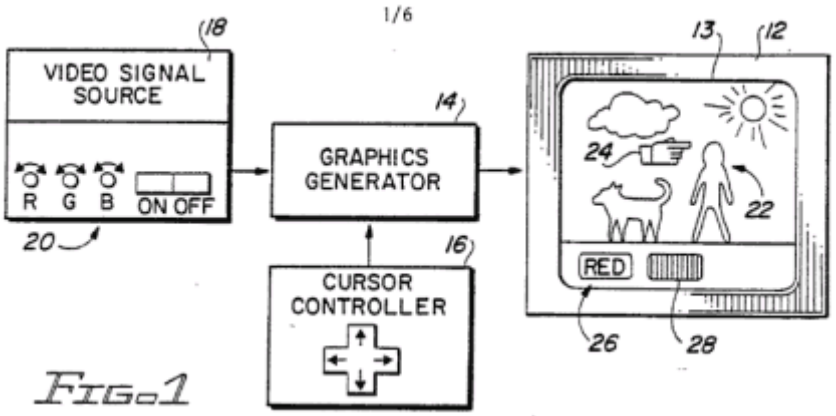

Raster assembly processor: US4947257.

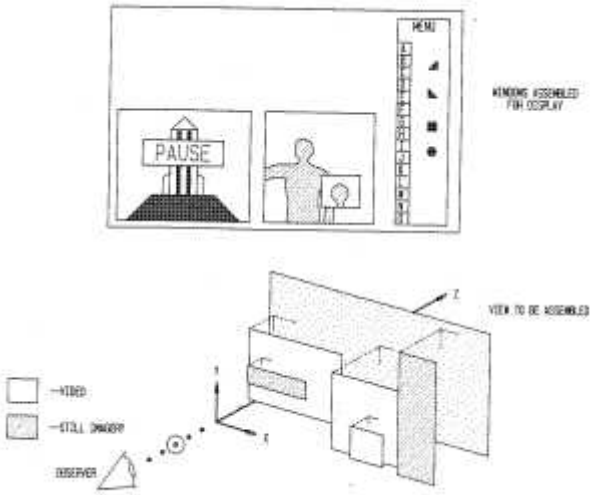

Interfacing video information and computer-generated graphics on a visual display terminal: US4958297.

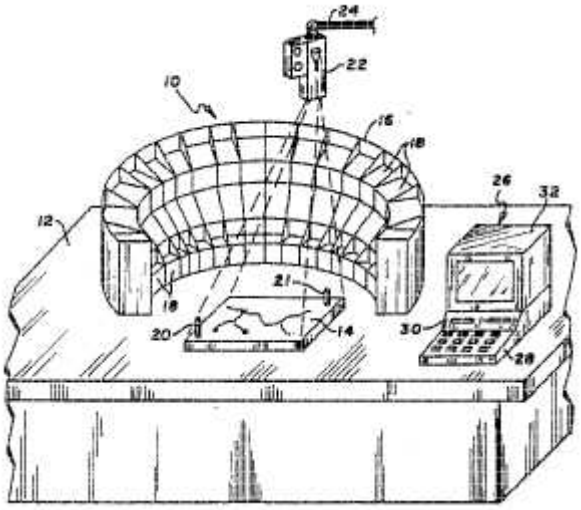

Improving apparent smootheness on gray-scale displays: US4612540.

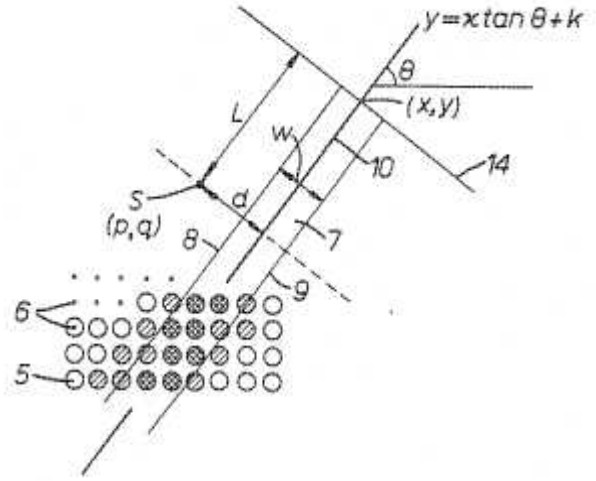

Displaying data in a second display area (obtained by overscan): US2002149593

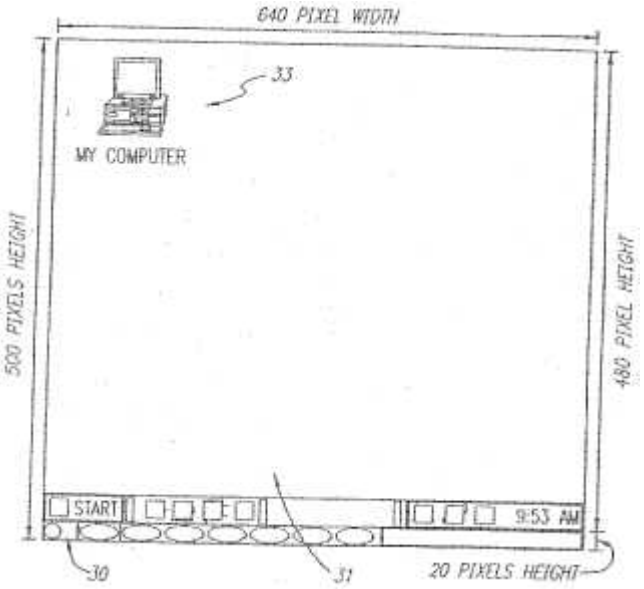

Radiation elimination circuit: DE29917219U, DE29917219U.

Correcting the rotation of a video display. US2003189639.

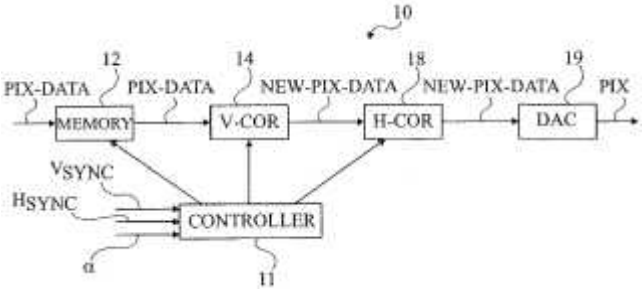

References

Limiting references

This place does not cover:

Deflection circuits	G09G 1/04
Synchronisation between the display unit and other units, e.g. other display units, video-disc players	G09G 5/12
Control of the character-code memory, Resolution modifying circuits, e.g. variable screen formats, resolution change between memory contents and display screen	G09G 5/227
Control of display attribute	G09G 5/30
Control of the bit-mapped memory, Resolution modifying circuits, e.g. variable screen formats	G09G 5/391

Informative references

Attention is drawn to the following places, which may be of interest for search:

Prevention of data theft by detection of electromagnetic stray radiation of VDU	G06F 21/00
Coupling parts for selective co-operation with a counterpart in different ways to establish different circuits, e.g. For voltage selection, for series-parallel selection	H01R 29/00
Circuits special to multi-standard TV receivers	H04N 3/27
For additional information on a television signal	H04N 5/445

G09G 1/162

{for displaying digital inputs as analog magnitudes, e.g. curves, bar graphs, coordinate axes, singly or in combination with alpha-numeric characters (cathode-ray oscilloscopes for displaying analog inputs, singly or in combination with alpha-numeric characters G01R 13/20; television receiver circuitry for displaying supplementary, e.g. alpha-numeric, information H04N 5/445)}

Definition statement

This place covers:

Method and apparatus for enlarging a trend graph: US5261031.

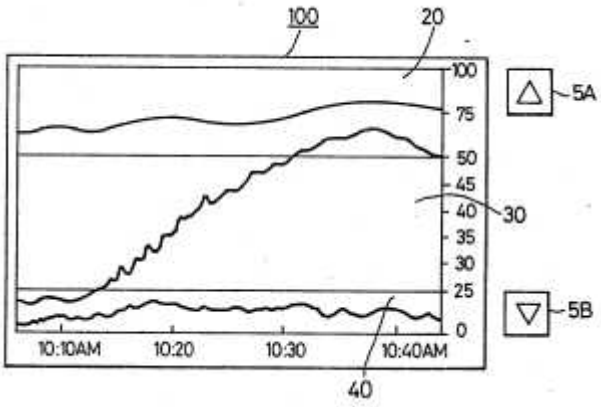

Waveform signal display controlling device and method: EP0987673.

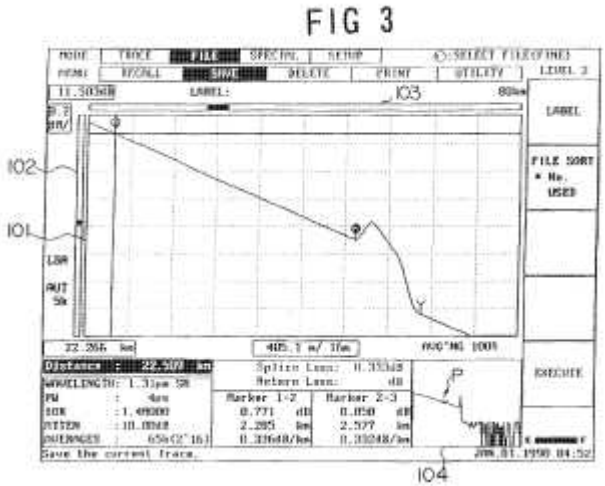

Method to scale electrocardiograph (ECG) waveforms independent from display resolution: EP0932139.

Trace coloring system and method: US5959607.

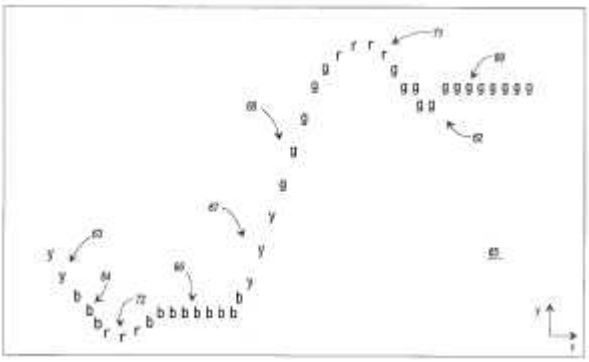

Displaying graphic data: EP0636965.

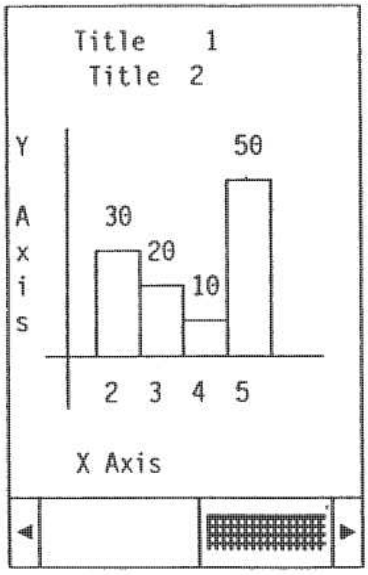

FIG. 4

References

Informative references

Attention is drawn to the following places, which may be of interest for search:

Cathode-ray oscilloscopes for displaying analog inputs, singly or in combination with alpha-numeric characters	G01R 13/20
Television receiver circuitry for displaying supplementary, e.g. Alpha-numeric, information	H04N 5/445

G09G 1/165

{Details of a display terminal using a CRT, the details relating to the control arrangement of the display terminal and to the interfaces thereto (details suitable for both CRT and flat panel G09G 5/003; specific for a flat panel G09G 3/2092)}

Definition statement

This place covers:

Arrangements for data processing done in order to adapt the incoming data to the display on a CRT; details of the deflection signals or driving signals of the CRT in dependance of the data to be displayed.

The codes G09G 1/165 and below apply only if a monitor-architecture can be identified (click to see definition; the same rule applies for G09G 3/2092 and G09G 5/003). The G09G 1/165 and below is used only in exceptional cases where the processing is clearly specific to a CRT. Anything that might as well be used for other technologies is to be classified under the G09G 5/003 and its (more detailed) sub-groups.

Illustrative examples:

Monitor calibration: US2003053001.

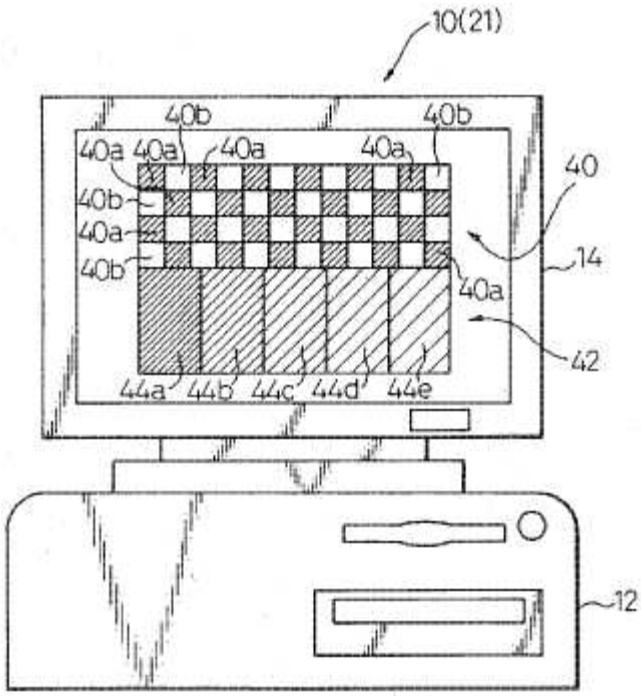

US2002057282

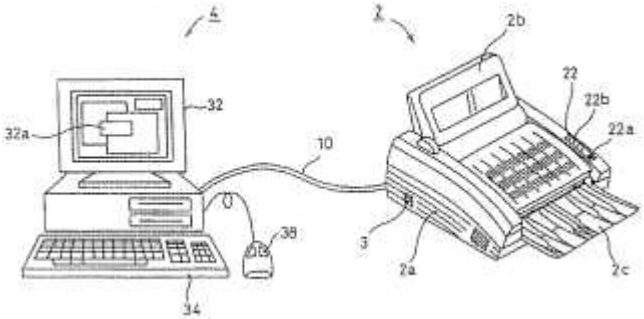

Screen alignment and positioning: US2002180769.

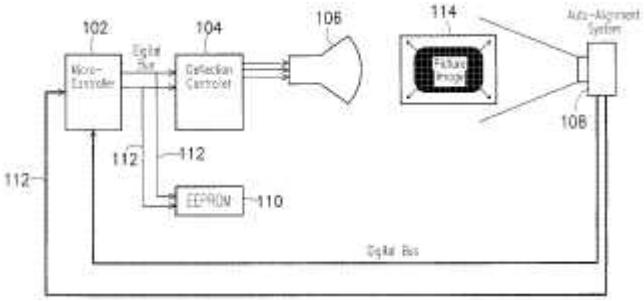

US2003001856

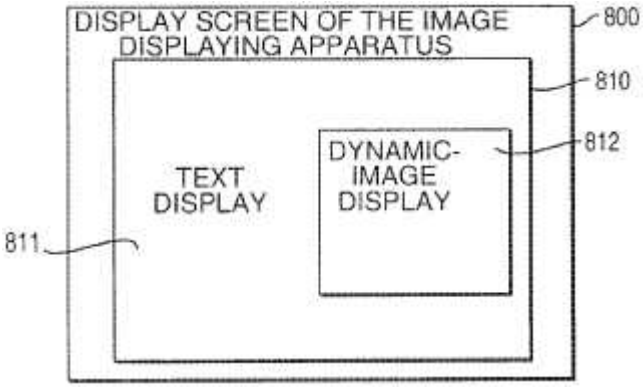

US4338597

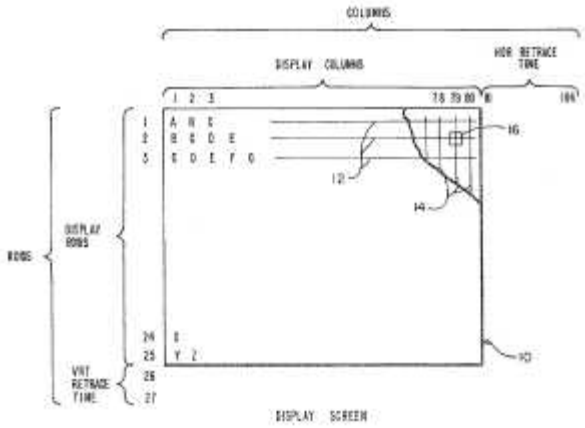

US4081797

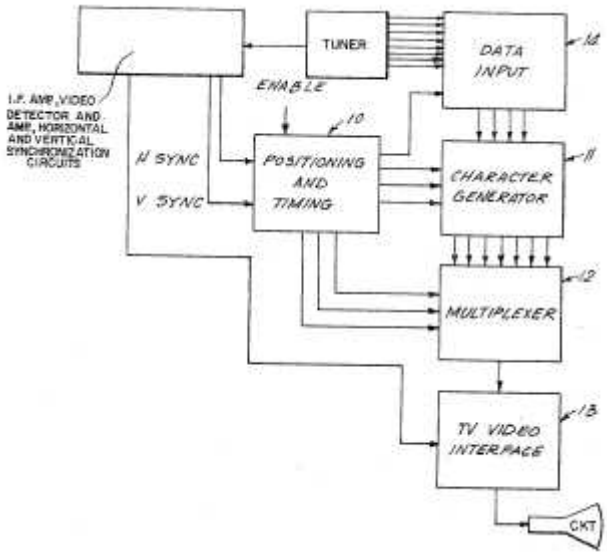

References

Limiting references

This place does not cover:

Details specific for a flat panel	G09G 3/2092
Details suitable for both CRT and flat panel	G09G 5/003

Informative references

Attention is drawn to the following places, which may be of interest for search:

Interfacing with colour display	G09G 1/285
Control of matrices with row and column drivers	G09G 3/3611
Using display panels	G06F 3/147
Using cathode-ray tubes	G06F 3/153

Glossary of terms

In this place, the following terms or expressions are used with the meaning indicated:

Display terminal	Means an apparatus connected to a source of display data (usually a graphics controller of a computer, or directlz to the computer itself) adapted to display images generated by this source of data. In general a "Display terminal" is an arrangement including a display device (e.g. a CRT with its driving electronic or a flat panel including its row and column drivers), a display device controller (the hardware and software (usually a microprocessor) that controls the display device and that allows its functioning by, for example, generating the signals that are needed to bring the data to the drivers) and a display terminal controller (the hardware and software used to control the display terminal as a whole and to interface the display terminal to the graphics controller, to adapt data and control signals, for example in an LCD driven by a VGA type graphics controller).

G09G 1/167

{Details of the interface to the display terminal specific for a CRT (details suitable for both CRT and flat panel G09G 5/006, specific for a flat panel G09G 3/2096)}

Definition statement

This place covers:

Illustrative examples: Parallel data display of multiple executing environments:US2004226041.

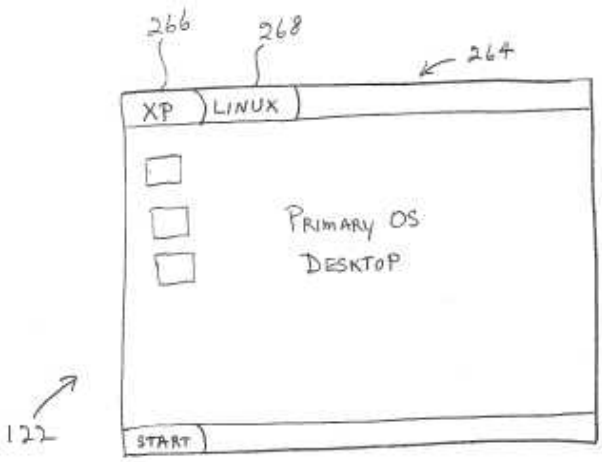

Single horizontal scan range CRT monitor: WO0129811.

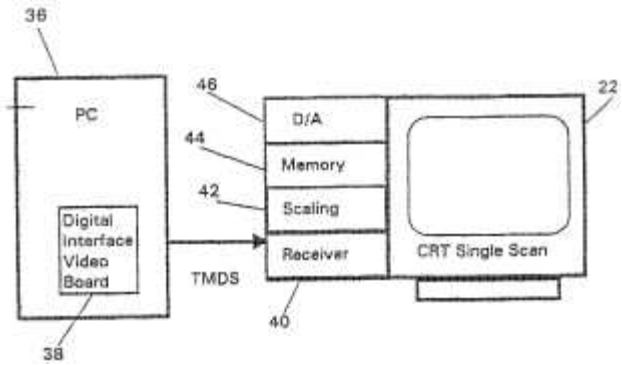

Improved signal restoration: US6529248.

Display monitor control and communications bus interface: US6590572.

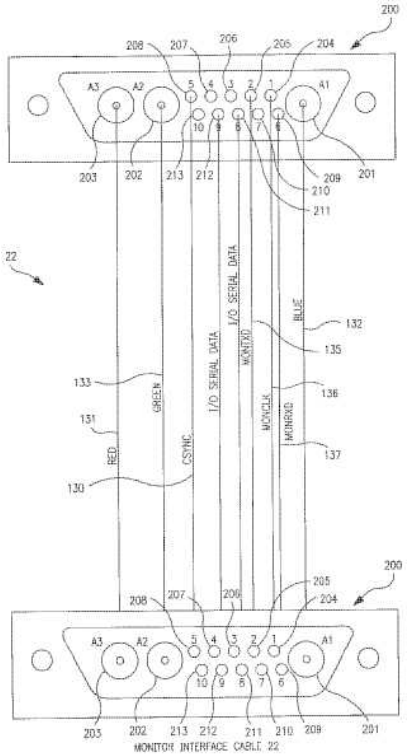

TV-PC conversion cable. DE19630941.

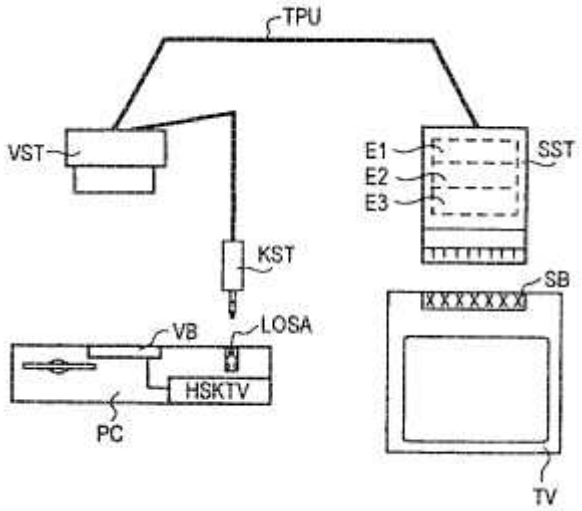

Adding display data channel to existing display: GB2294135.

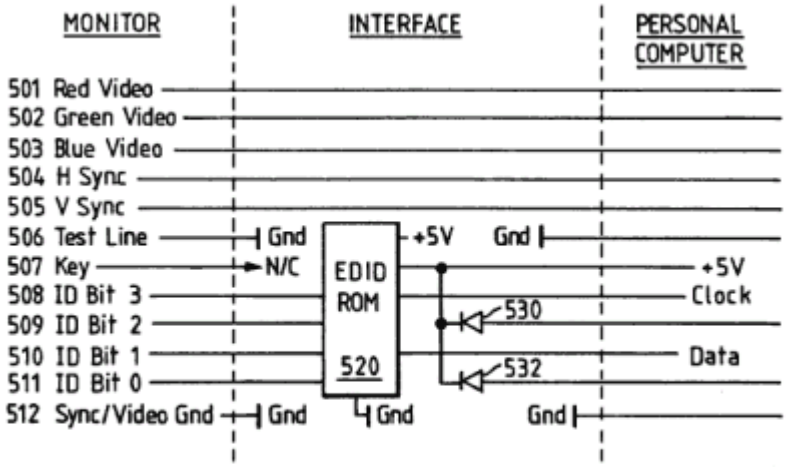

FIG. 6

Separate message section on CRT display device: US5384576.

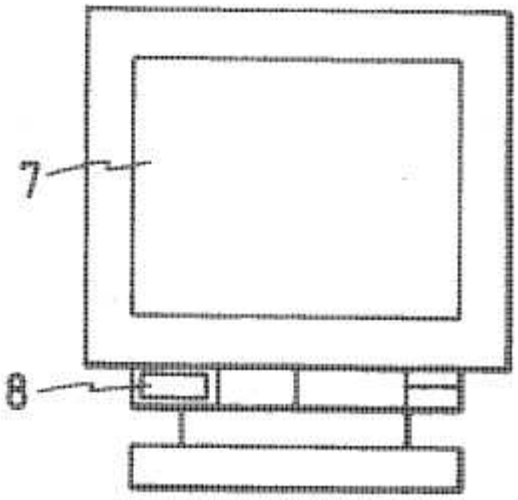

References

Limiting references

This place does not cover:

Specific for a flat panel	G09G 3/2096
Suitable for both CRT and flat panel	G09G 5/006
Control arrangements or circuits for visual indicators common to cathode-ray tube indicators and other visual indicators, Details of the interface to a display terminal	G09G 5/006

Informative references

Attention is drawn to the following places, which may be of interest for search:

Interfacing with colour display	G09G 1/285
Control of matrices with row and column drivers	G09G 3/3611
Using display panels	G06F 3/147
Using cathode-ray tubes	G06F 3/153

Special rules of classification

The class G09G 1/167 includes "details of the interface to a CRT display terminal". If a television set is used as a display terminal, the class G09G 5/006 should be given and not the G09G 1/167 . This is because the signals generated for a television set are standard television signals (NTSC or PAL...): the television itself might have an lcd or plasma panel. If the interface to the display terminal has some details about the signals of the interface, and if these details are clearly means for a CRT terminal (e.g. level or polarity of a h-synch or v-synch signals, black level adjustment...) then the documents are classified in the G09G 1/167 .

G09G 1/18

a small local pattern covering only a single character, and stepping to a position for the following character, e.g. in rectangular or polar co-ordinates, or in the form of a framed star

Definition statement

This place covers:

Illustrative example of subject matter classified in this group (US3777059):

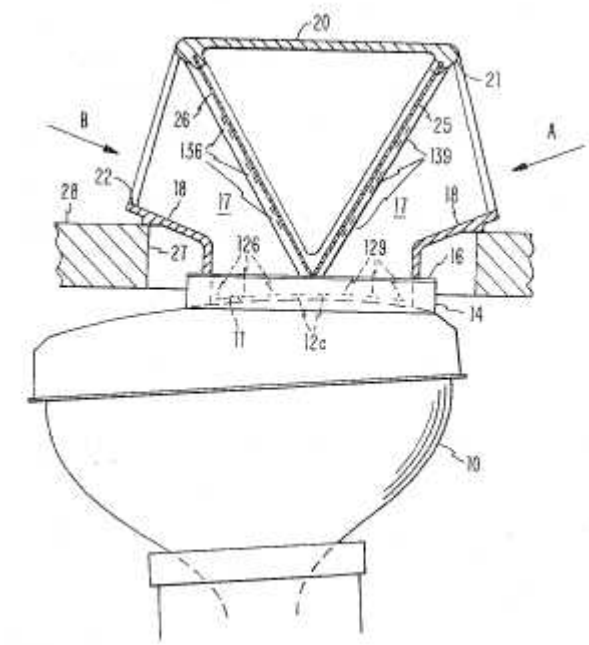

G09G 1/20

using multi-beam tubes (G09G 1/26, G09G 1/28 take precedence)

Definition statement

This place covers:

Multiple beams and beam deflection necessary! A flat panel using deflection is considered as being a multiple beam CRT.

Illustrative examples:

Common focus: US5382883.

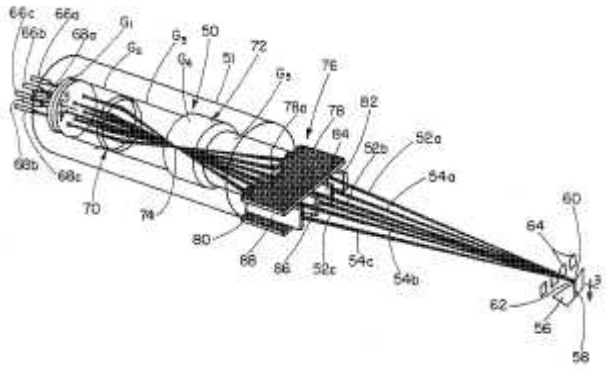

US4063233

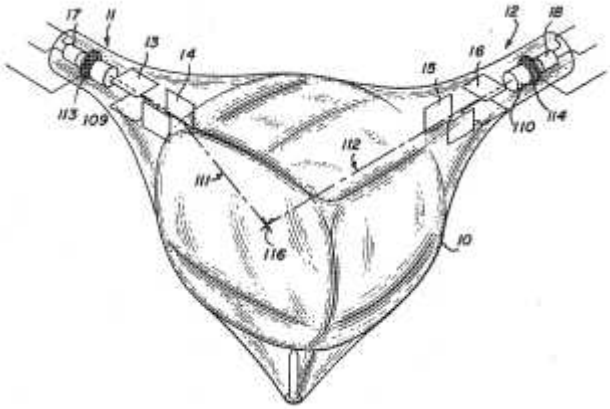

Separated regions: EP1054379, DE1137143.

For intensity control: US5691608,

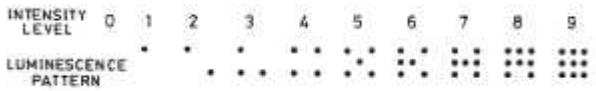

FR2296228.

References

Limiting references

This place does not cover:

Using storage tubes	G09G 1/26
Using colour tubes	G09G 1/28

Informative references

Attention is drawn to the following places, which may be of interest for search:

Using large area or array source	H01J 31/127
Producing multiple scanning	H04N 3/28
With more than one beam in a tube	H04N 9/20

G09G 1/22

using tubes permitting selection of a complete character from a number of characters {(tubes therefor H01J 31/16)}

Definition statement

This place covers:

Illustrative example of subject matter classified in this group (GB929976):

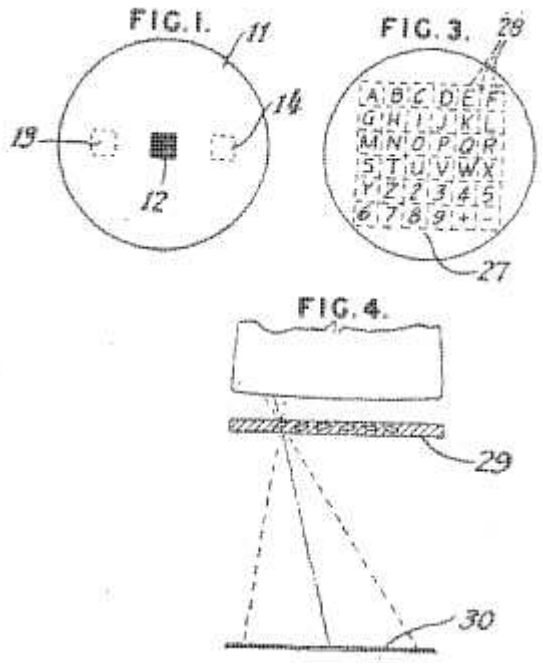

and US2925526, US2866189.

References

Informative references

Attention is drawn to the following places, which may be of interest for search:

Tubes therefor	H01J 31/16

G09G 1/26

using storage tubes {(tubes therefor H01J 31/58)}

Definition statement

This place covers:

Illustrative examples of subject matter classified in this group:

US3639910

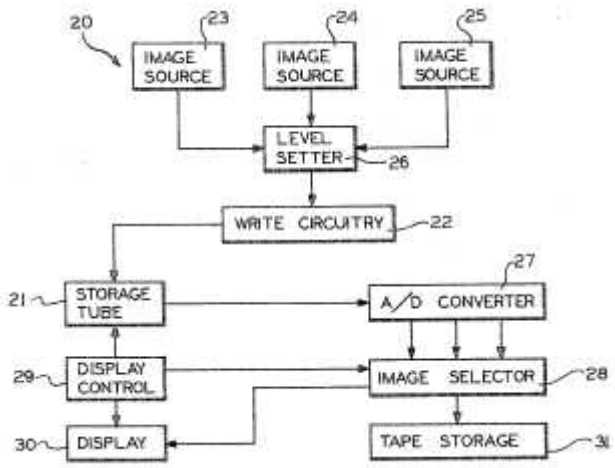

US4107741

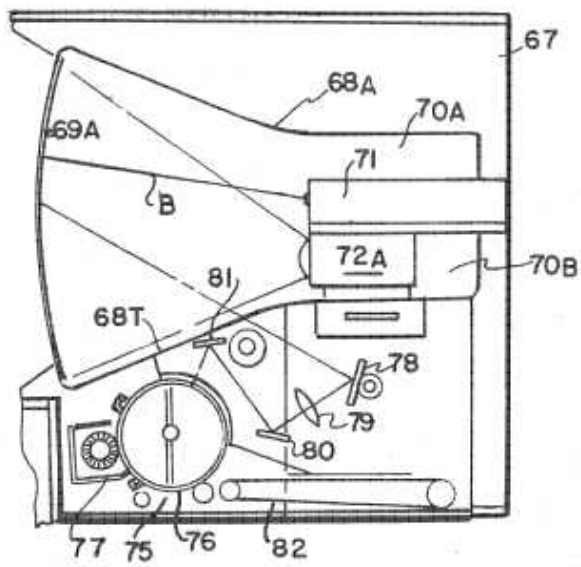

US3902012

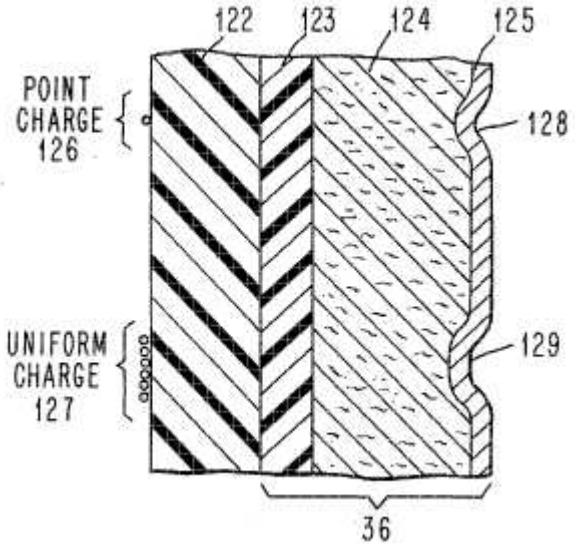

References

Informative references

Attention is drawn to the following places, which may be of interest for search:

Tubes therefor	H01J 31/58

G09G 1/28

using colour tubes {(tubes therefor H01J 31/20)}

Definition statement

This place covers:

Specific circuits for CRT tubes (e.g. for a penetron tube).

Illustrative examples:

Color shadow mask cathode ray tube: WO8203494.

Position programmed colour CRT: NL7505346.

Colour image display system - CRT with display areas and associated circuitry: DE2329081.

Multi-color crt display system: US3280254.

Cathode ray tube with addressable nanotubes: US6515639.

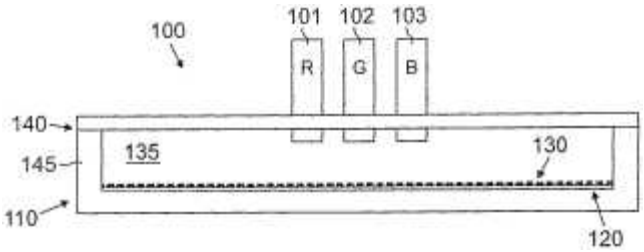

Image processing system utilizing brush profile: US5412767.

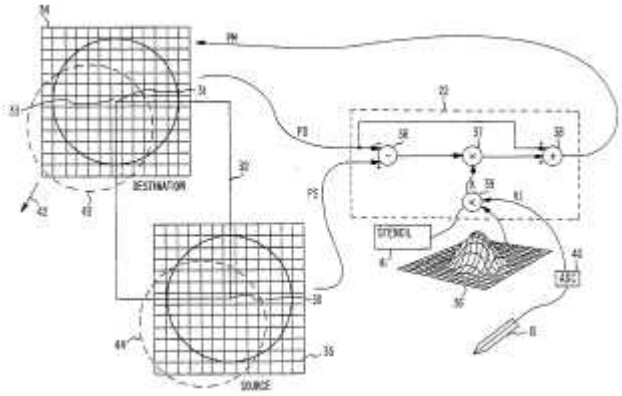

References

Informative references

Attention is drawn to the following places, which may be of interest for search:

Display of colours in general	G09G 5/02
Measurement of color	G01J 3/46
Tubes therefor	H01J 31/20
Color picture communication systems	H04N 1/46

G09G 1/285

{Interfacing with colour displays, e.g. TV receiver}

Definition statement

This place covers:

- specific interface circuits between the color processing output circuit (e.g. output of video ram or color lookup table if present) and the color display tube;
- fiber-optic data link between color control circuit and CRT-monitor;
- color normalisation for display terminals: e.g. adapting the LUT content to the specific colors of the phosphors and to the gamma curve of the display;
- monitor sensing circuits (color <=> monochrome).

Illustrative examples:

Display device with black correction unit: US2002150293.

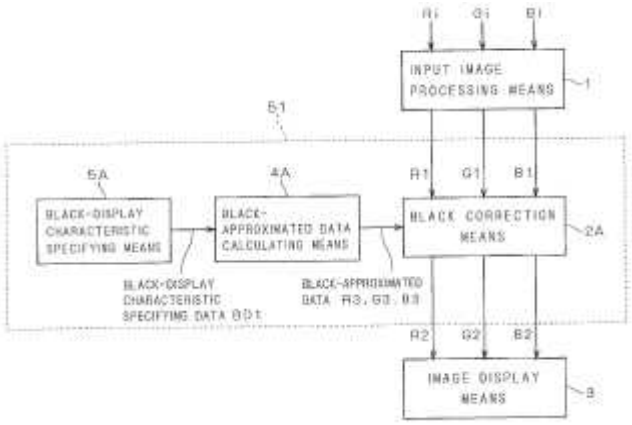

Compensation method for improving color saturation and image quality of plasma display panel by adjusting the strength of input image signals: US2002167467.

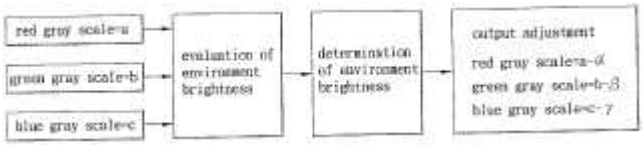

Plasma displays

Method and apparatus for automatically calibrating a CRT: EP0539943.

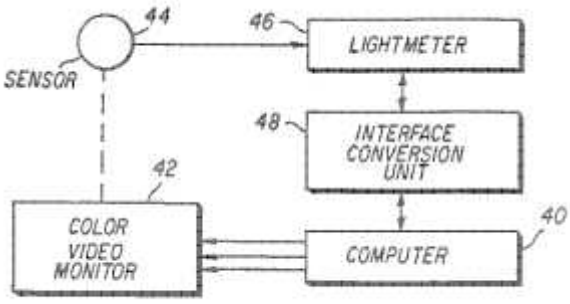

FIG. 3

Image display system that performs grayscale correction in accordance with the on-site environment: US2003147053.

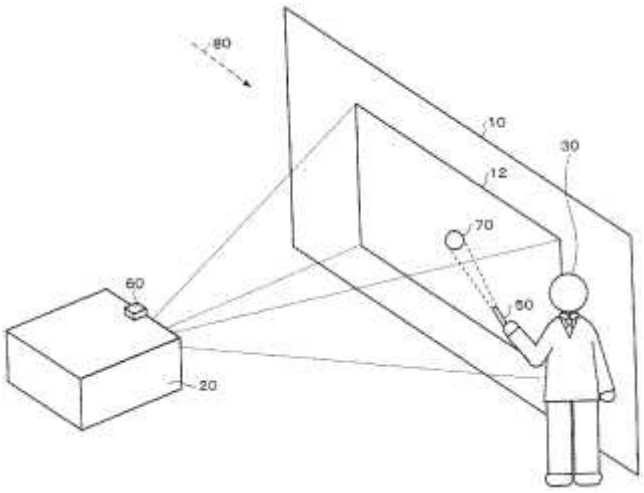

Light output correction of a display monitor. EP0514025.

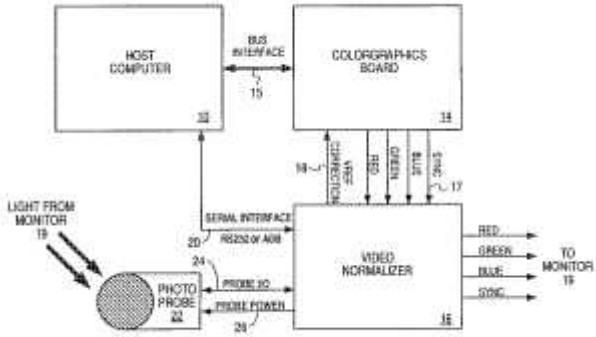

FIG. 1

Multi-spectral color correction. US2002122044.

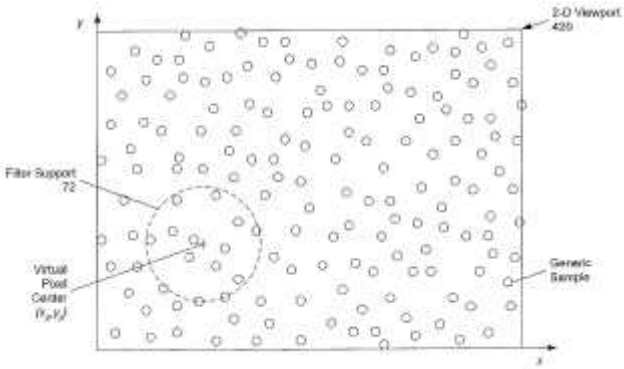

G09G 3/00

Control arrangements or circuits, of interest only in connection with visual indicators other than cathode-ray tubes (optical scanning systems in general G02B 26/10)

Definition statement

This place covers:

- Control of flat panel display in general.
- Control of rotatable displays: to display information on a screen in either a horizontal orientation (landscape) or vertical orientation (portrait) the display controller is able to change the orientation of the displayed information. In some cases the physical screen is also rotated.

References

Limiting references

This place does not cover:

Control of illumination source (e.g. backlight) for non intrinsically emissive displays	G09G 3/3406

Informative references

Attention is drawn to the following places, which may be of interest for search:

Scanning systems for optical devices or arrangements using movable or deformable optical elements for controlling the intensity, colour, phase, polarisation or direction of light, e.g. switching, gating, modulating.	G02B 26/10
Visual indicators for traffic control systems.	G08G

Special rules of classification

Illustrative examples of subject matter covered in this group: US5936619

G09G 3/001

{using specific devices not provided for in groups G09G 3/02 - G09G 3/36, e.g. using an intermediate record carrier such as a film slide; Projection systems; Display of non-alphanumerical information, solely or in combination with alphanumerical information, e.g. digital display on projected diapositive as background (slide projectors per se G03B 23/00 = 42 HP)}

Definition statement

This place covers:

- Using an intermediate record carrier such as a film slide.
- Control of projection systems or displays.
- Display of non-alphanumerical information, solely or in combination with alphanumerical information, e.g. digital display on projected diapositive as background.
- Control of rotating or moving display (Roled): one or more (usually linear) arrays of light emitting elements are rotated or moved to display an image on a virtual screen created on the surface of revolution or movement.
- Control of stereoscopic computer displays.

- Control of multiple view displays, i.e. displays producing e.g. two images which are visible under different viewing angles.

References

Limiting references

This place does not cover:

By tracing or scanning a light beam on a screen	G09G 3/02
For presentation of a single character by selection from a plurality of characters, or by composing the character by combination of individual elements, e.g. segments using a combination of such display devices for composing words, rows or the like, in a frame with fixed character positions	G09G 3/04
For presentation of an assembly of a number of characters, e.g. a page, by composing the assembly by combination of individual elements arranged in a matrix no fixed position being assigned to or needed to be assigned to the individual characters or partial characters	G09G 3/20

Informative references

Attention is drawn to the following places, which may be of interest for search:

Circuits for displaying split screens (including CRTs with divided screens)	G09G 1/007
Projection display for cars (e.g. HUDs)	B60K 37/00, G02B 27/00
Light guides specially adapted for lighting devices or systems	G02B 6/0001
Mountings, adjusting means, or light-tight connections, for optical elements adapted for automatic focusing or varying magnification	G02B 7/09
Systems for automatic generation of focusing signals including a sight line detecting device	G02B 7/287
Head mounted displays	G02B 27/017
Head mounted displays characterised by optical features	G02B 27/0172
Head mounted displays characterised by mechanical features	G02B 27/0176
Other optical systems for producing stereoscopic or other 3D effects	G02B 27/22
Stereoscopic and volumetric TV display	G02B 27/22, H04N 13/00
Other optical systems for producing stereoscopic or other 3D effects, the image being built up from image elements distributed over a 3D volume	G02B 27/2271
Other optical systems for producing stereoscopic or other 3D effects, the volume being constructed from a stack or sequence of 2D planes	G02B 27/2278
Slide projectors per se	G03B 23/00
Displaying, advertising, signs, labels or name-plates, seals	G09F
Mobile visual advertising	**G09F9/21**
Scanning details of television systems by switched stationary formation of lamps, photocells or light relays (e.g. optical fibers)	H04N 3/12
Projectors for colour picture display	H04N 9/31

Special rules of classification

Illustrative examples of subject matter:

WO9914730 (display device with rotating display elements)

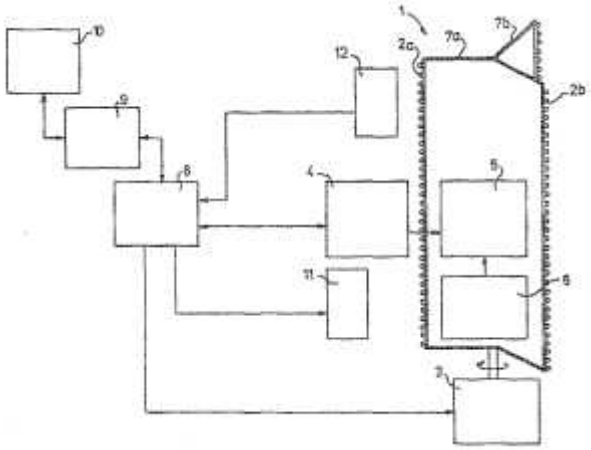

US4573048 (High speed link for rotating display)

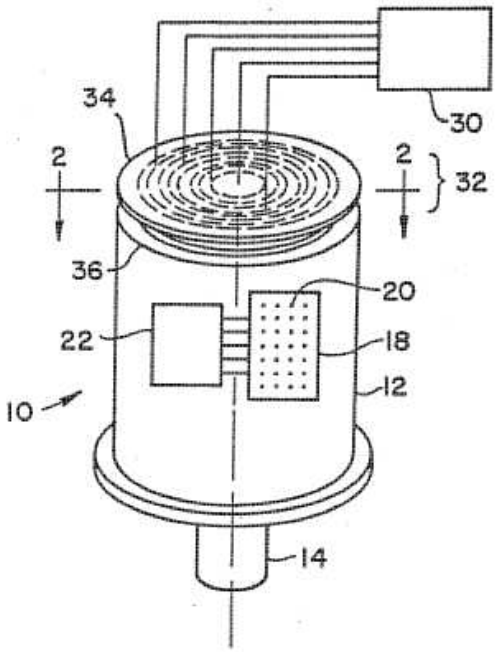

US6877864 (projector with image modified to compensate distortions from projecting onto a screen from a side, so called "Keystone correction")

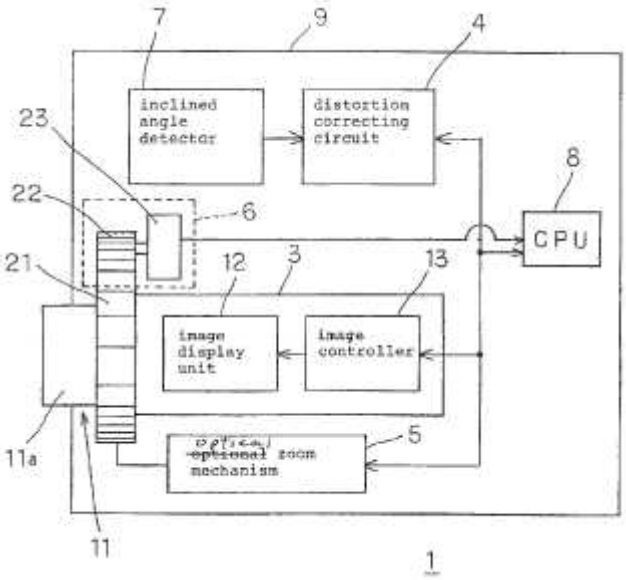

EP1528528 (projector with plurality of LCD panels).

By orienting the pixel arrays of the light modulators at different non-orthogonal angles, gaps between adjacent pixels of the panels are not aligned. As such, the "screen door" effect caused, for example, by gaps between adjacent pixels of the pixel arrays is reduced. In addition, misalignment between the pixel arrays is less noticeable.

Therefore, the driving circuit calculates modified images for at least one not aligned LCD.

EP1816638 (Coloured display which displays two different images depending onto the viewing direction)

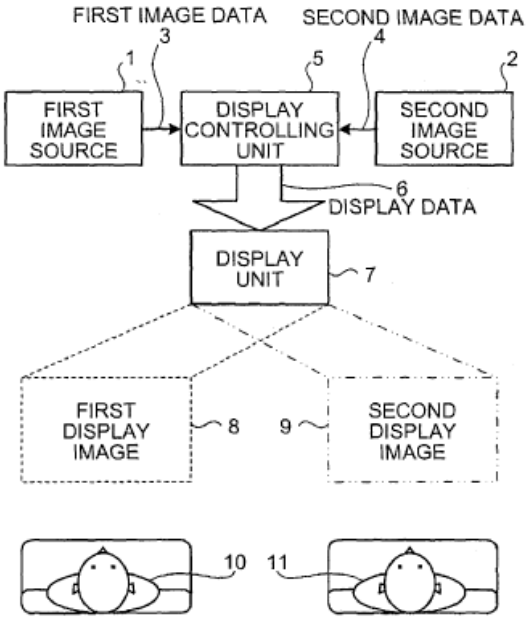

US6175354 (Image display apparatus)

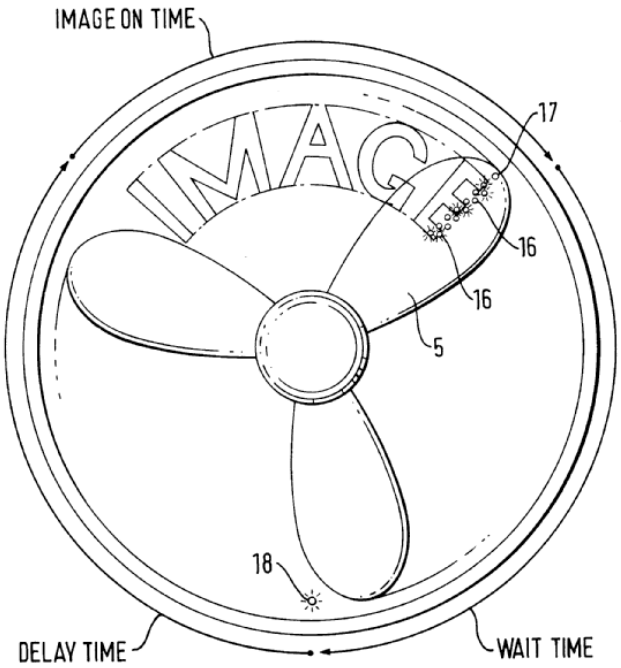

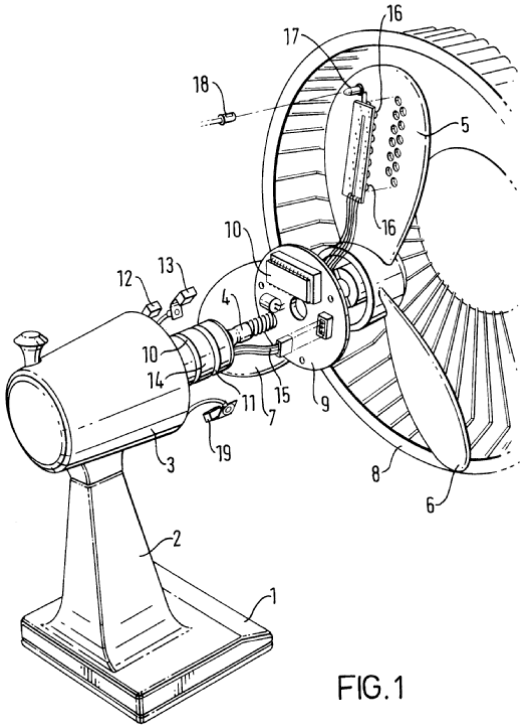

FIG.1

EP0546844 (Baton using light emitting cell array to form a display)

FIG. 1

EP0887783 (Rotating drum or blade with linear array of light sources)

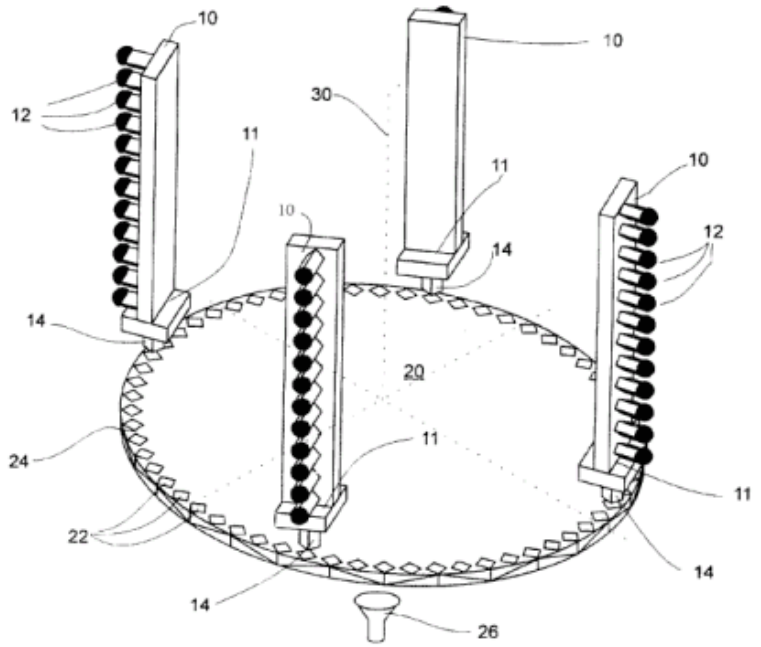

Fig. 1

G09G 3/004

{to give the appearance of moving signs}

Definition statement

This place covers:

Display devices wherein, different from a standard panel:

- the displayed image has a higher resolution than the display device itself; and
- at any time, only part of the complete image is displayed.

Illustrative example: EP0709818

(A)

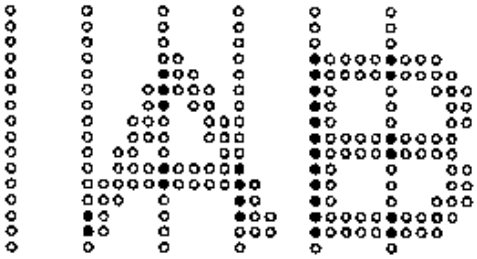

(B)

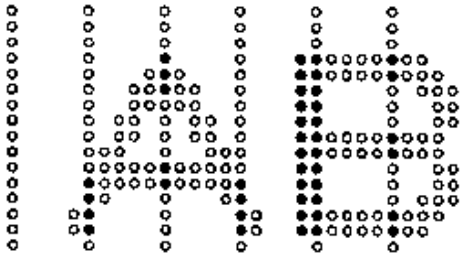

G09G 3/006

{Electronic inspection or testing of displays and display drivers, e.g. of LED or LCD displays (testing individual LED's G01R 31/2635; testing lamps G01R 31/44; testing of optical features of LCD displays G02F 1/1309)}

Definition statement

This place covers:

Testing or inspecting flat panel displays by electrical means, i.e. by checking electrical signals and parameters while driving the panel, possibly under special driving conditions specific for the test.

References

Limiting references

This place does not cover:

Testing of individual LEDs	G01R 31/2635
Testing lamps	G01R 31/44
Testing of optical features of LCD displays	G02F 1/1309

Informative references

Attention is drawn to the following places, which may be of interest for search:

Investigating or analysing materials by the use of optical means, i.e. using infra-red, visible, or ultra-violet light; etc. Inspecting patterns on the surface of objects.	G01N 21/956
Testing of electronic circuits	G01R 31/282
Diagnosis, testing or measuring for television systems or their details	H04N 17/00

Special rules of classification

Does not apply to testing during manufacturing of non-finished flat panel displays, when the result of the testing are used to determine parameters of the subsequent manufacturing steps (such testing is regarded as a step of manufacturing).

Also, does not apply if the testing/inspecting is carried out by optical means (e.g. optical measurements), which is classified in G01R. In some "mixed" or doubtful cases classifications in both G09G 3/006 and G01R may be given.

Does not apply to mere calibration of display devices, i.e. to the setting of control parameters for properly functioning displays based on detection of operation parameters (e.g. detection of colour, luminance etc), for which Indexing Code G09G 2320/0693 applies.

G09G 3/02

by tracing or scanning a light beam on a screen

Definition statement

This place covers:

- Control of displays using a deflected and modulated light beam for directly producing the displayed image on the screen.
- Control of displays using deflected and modulated light beams, which are generated by a linear array, for directly producing the displayed image on the screen.
- Control of displays using a deflected and modulated light beam to control an array of photosensitive elements that receive it and consequently command each a pixel display element.
- Control of displays using a deflected and modulated light beam for optically writing image data on a photosensitive surface that commands a display such as a light modulator.
- Control of stereoscopic displays.
- Control of multiple view displays, i.e. displays producing e.g. two images which are visible under different viewing angles.

Illustrative examples:

US3739370 (deflected light beam producing the displayed image on the screen)

US4097115 (Control of optical scanning device for producing a multiple line scan using a linear array of sources and a textured scanned surface)

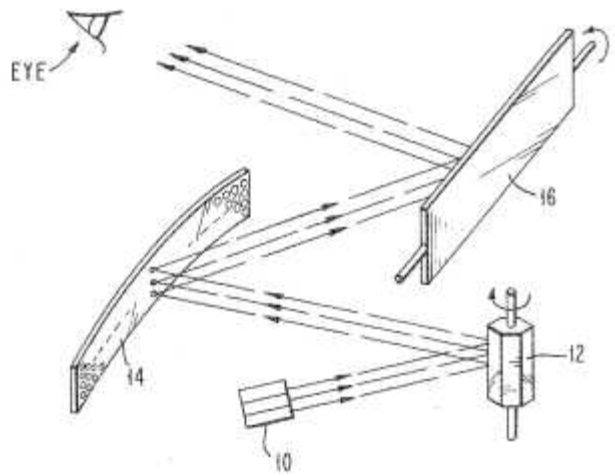

US2006132452 (control of a display using a deflected and modulated light beam to control an array of photosensitive elements that receive it and consequently command each a pixel display element)

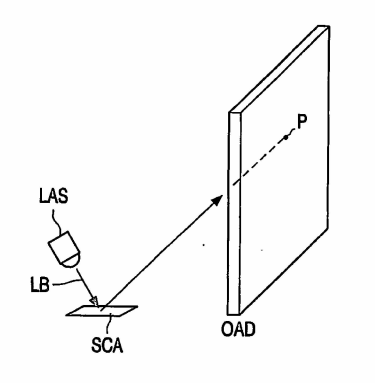

US5463468 (control of a display usinga deflected and modulated light beam for optically writing image data on a photosensitive surface that commands a display such as a light modulator)

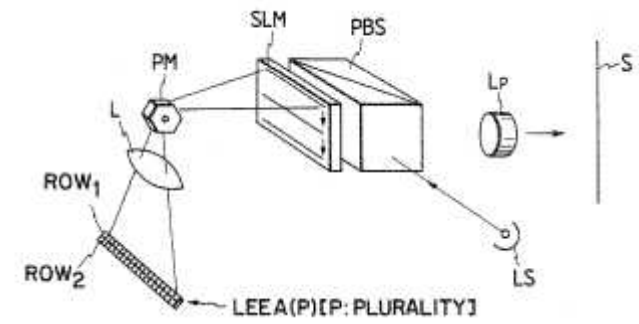

G09G 3/04

for presentation of a single character by selection from a plurality of characters, or by composing the character by combination of individual elements, e.g. segments {using a combination of such display devices for composing words, rows or the like, in a frame with fixed character positions}

Definition statement

This place covers:

- Control of displays for displaying a character composed by a fixed number of display elements as segments or dots, i.e. the character position within the display device is fixed, and the specific character composition by combination of individual display elements to be displayed is selected from a plurality of predefined character compositions without specifying a display technology or with details of two or more display technology, but aspects of general character for various, if not all display technologies.
- Control of displays for displaying a character by selection from a plurality of complete characters.

References

Informative references

Attention is drawn to the following places, which may be of interest for search:

Control of displays having display elements arranged in a matrix	G09G 3/20

Examples

US4458243 (control of a segment display with each character being loaded from a ROM and generated at a fixed position by 14 segments)

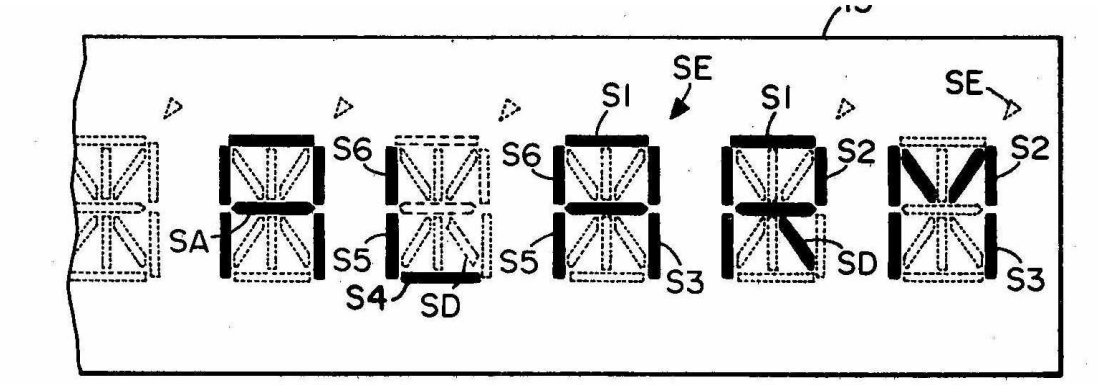

US4504829 (control of a dot character display with each character being loaded from a memory and generated at a fixed position by 5 times 7 dots)

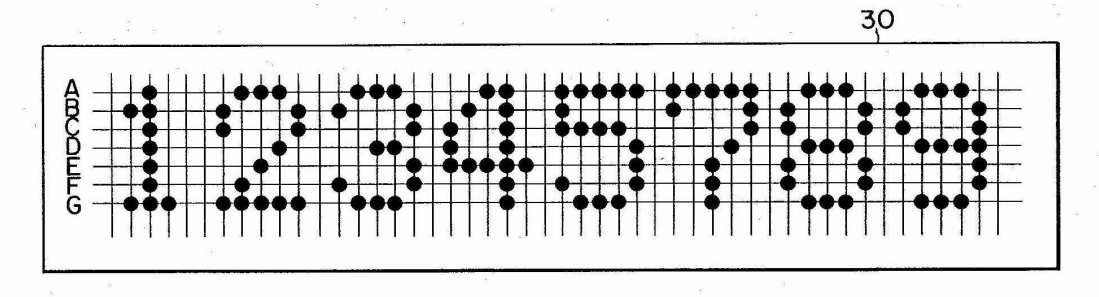

G09G 3/045

{Selecting complete characters}

Definition statement

This place covers:

Control of displays for displaying a character by selection from a plurality of complete characters.

Illustrative examples: US3218625 (control of a display wheel for converting binary code to display position)

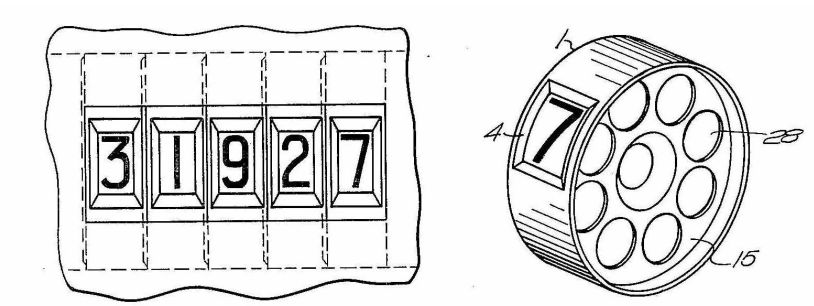

US3200396 (control of a display using fused characters

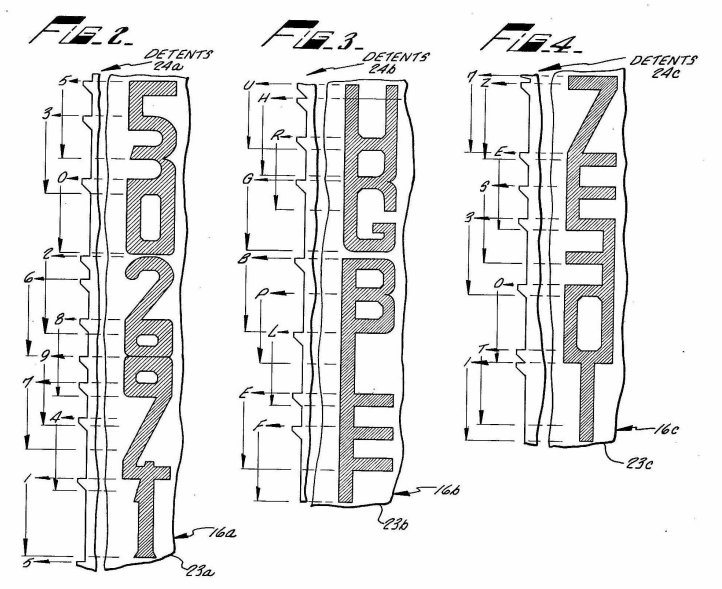

G09G 3/06

using controlled light sources

Definition statement

This place covers:

Control of displays using controlled light sources for displaying a character composed by a fixed number of display elements as segments or dots.

References

Informative references

Attention is drawn to the following places, which may be of interest for search:

Control of displays using controlled light sources as display elements arranged in a matrix	G09G 3/22

Special rules of classification

In this group, documents concerning the control of character displays using controlled light sources not covered by any of the groups G09G 3/08 - G09G 3/14 are classified, e.g. the control of vacuum fluorescent character displays.

G09G 3/08

using incandescent filaments

Definition statement

This place covers:

Control of displays using incandescent filaments, i.e. incandescent light bulbs, for displaying a character composed by a fixed number of display elements as segments or dots.

References

Informative references

Attention is drawn to the following places, which may be of interest for search:

Control of displays using incandescent filaments, i.e. incandescent light bulbs, as display elements arranged in a matrix	G09G 3/24

G09G 3/10

using gas tubes

Definition statement

This place covers:

Control of displays using gas tubes, e.g. luminous plasma discharge cells, for displaying a character composed by a fixed number of display elements as segments or dots.

References

Informative references

Attention is drawn to the following places, which may be of interest for search:

Control of displays using luminous gas-discharge cells, e.g. luminous plasma discharge cells, as display elements arranged in a matrix	G09G 3/28

G09G 3/12

using electroluminescent elements (using cathode-ray tubes with phosphor screens G09G 1/00)

Definition statement

This place covers:

Control of displays using electroluminescent display elements for displaying a character composed by a fixed number of display elements as segments or dots.

References

Informative references

Attention is drawn to the following places, which may be of interest for search:

Control of displays using cathode-ray tubes with phosphor screens	G09G 1/00
Control of displays using electroluminescent display elements arranged in a matrix	G09G 3/30

G09G 3/14

semiconductor devices, e.g. diodes

Definition statement

This place covers:

Control of displays using electroluminescent display elements, which are semiconductor devices, e.g. diodes or transistors, for displaying a character composed by a fixed number of display elements as segments or dots.

References

Informative references

Attention is drawn to the following places, which may be of interest for search:

Control of displays using electroluminescent display elements, which are semiconductor devices, e.g. diodes or transistors, arranged in a matrix	G09G 3/32
Control of displays using organic electroluminescent display elements, which are semiconductor devices, e.g. diodes or transistors, arranged in a matrix	G09G 3/3208

G09G 3/16

by control of light from an independent source

Definition statement

This place covers:

- Control of displays using display elements, which do not emit light, but selectively control the light from an independent light source by transmission, reflection, or absorption of, for displaying a character composed by a fixed number of display elements as segments or dots
- Control of an independent light source used in displays using display elements, which selectively control the light from the independent source, for displaying a character composed by a fixed number of display elements as segments or dots

References

Informative references

Attention is drawn to the following places, which may be of interest for search:

Control of displays using display elements arranged in a matrix, which do not emit light, but selectively control the transmission, reflection, or absorption of light from an independent light source	G09G 3/34
Control of an independent light source used in displays using display elements arranged in a matrix, which selectively control the light from the independent source	G09G 3/3406

Special rules of classification

In this group, documents concerning the control of character displays not covered by the groups G09G 3/18 or G09G 3/19 are classified, e.g. the control of electrophoretic character displays.

G09G 3/18

using liquid crystals

Definition statement

This place covers:

Control of displays using liquid crystal display elements for displaying a character composed by a fixed number of display elements as segments or dots.

References

Informative references

Attention is drawn to the following places, which may be of interest for search:

Control of displays using liquid crystal display elements arranged in a matrix	G09G 3/36

G09G 3/19

using electrochromic devices

Definition statement

This place covers:

Control of displays using electrochromic display elements for displaying a character composed by a fixed number of display elements as segments or dots.

References

Informative references

Attention is drawn to the following places, which may be of interest for search:

Control of displays using electrochromic display elements arranged in a matrix	G09G 3/38

G09G 3/20

for presentation of an assembly of a number of characters, e.g. a page, by composing the assembly by combination of individual elements arranged in a matrix {no fixed position being assigned to or needed to be assigned to the individual characters or partial characters}

Definition statement

This place covers:

- Control of displays having display elements arranged in a matrix with details of two or more display technology, but aspects of general character for various, if not all display technologies.
- Control of displays having display elements arranged in a matrix without specifying a display technology.

References

Informative references

Attention is drawn to the following places, which may be of interest for search:

Electronic inspection or testing of displays and display drivers	G09G 3/006
Control arrangements or circuits for presentation of a single character by selection from a plurality of characters, or by composing the character by combination of individual elements, e.g. segments	G09G 3/04

Special rules of classification

For control arrangements or circuits with details concerning the control of intermediate tones of elements arranged in a matrix, a code within G09G 3/2007 is to be given, and with details concerning the colour, G09G 3/2003 is to be given. For control arrangements or circuits for elements arranged in a matrix with details of one specific display technology, a code corresponding to the specific display technology is to be given, e.g. G09G 3/38 for using electrochromic elements.

G09G 3/2003

{Display of colours (specific for liquid crystal displays G09G 3/3607)}

Definition statement

This place covers:

Control of a display to display a coloured image with aspects specific for flat panel displays.

References

Limiting references

This place does not cover:

Control of a liquid crystal display for displaying a coloured image	G09G 3/3607

Informative references

Attention is drawn to the following places, which may be of interest for search:

Control of a display for displaying a coloured image in general	G09G 5/02

G09G 3/2007

{Display of intermediate tones}

Definition statement

This place covers:

Control of a display to display an image having intermediate tones with aspects specific for flat panel displays.

Special rules of classification

Does not apply to a control of the brightness of a display as a whole, for which the Indexing Code G09G 2320/0626 should be given.

G09G 3/2011

{by amplitude modulation}

Definition statement

This place covers:

Control of a display to display an image having intermediate tones by modulating the amplitude of the analog signals applied to the display elements.

Special rules of classification

This code is only given if specific details of the amplitude modulation are present or the amplitude modulation plays a significant role, but not for indicating the presence of a usual amplitude modulation in a document.

G09G 3/2014

{by modulation of the duration of a single pulse during which the logic level remains constant}

Definition statement

This place covers:

Control of a display to display an image having intermediate tones by modulating the duration of a single pulse applied to the display element or by modulating the duration of several pulses applied to the display element in the same manner.

Illustrative examples:

US2003/0117420 (modulation of the intermediate tone displayed by a pixel by varying the width applied to a data electrode during a scan period determined by the scan signal applied to the scan electrode)

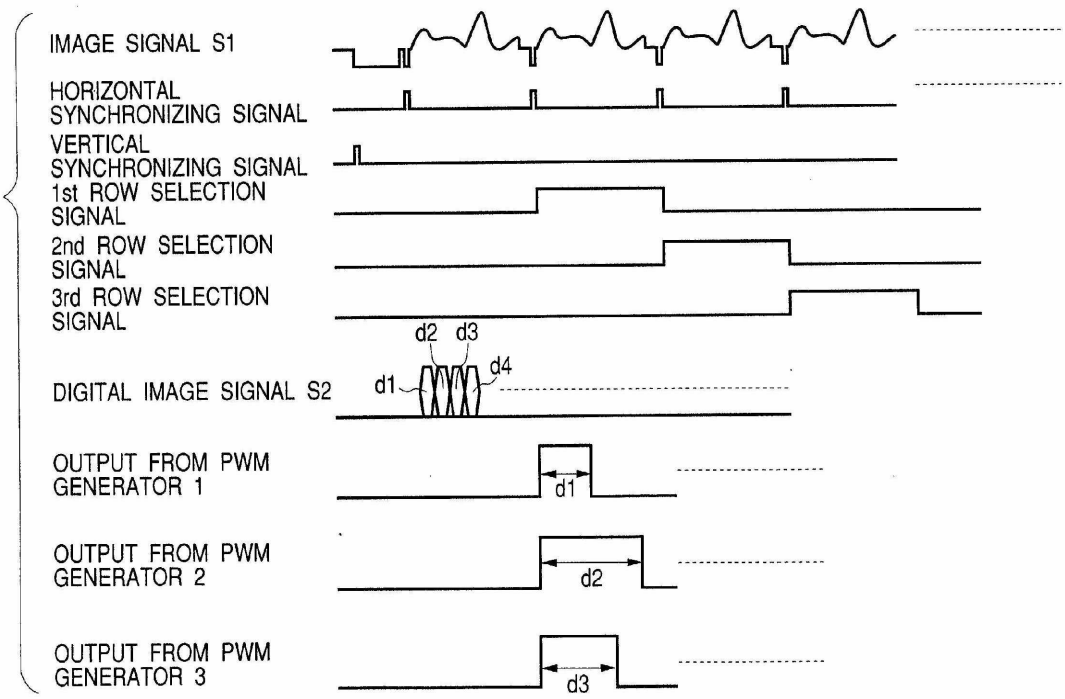

G09G 3/2018

{by time modulation using two or more time intervals}

Definition statement

This place covers:

- Control of a display to display an image having intermediate tones by frame rate control or temporal dithering, i.e. the intermediate tone is generated by selectively activating a display element in a number of frames.
- Control of a display to display an image having intermediate tones by modulating the duration of several pulses applied to the display element in a different manner for each pulse.

G09G 3/2022

{using sub-frames}

Definition statement

This place covers:

- Control of a display to display an image having intermediate tones by using sub-frames, i.e. selectively activating a display element in a number of non-overlapping time periods, in which a frame is subdivided.
- Control of a display to display an image having intermediate tones by using sub-frames, i.e. selectively activating a display element in a number of non-overlapping time periods, in which a frame is subdivided, wherein no details of the ratios of the duration of one sub-frame to the duration of another sub-frame are given.
- Control of a display to display an image having intermediate tones by using sub-frames, i.e. selectively activating a display element in a number of non-overlapping time periods, in which a frame is subdivided, wherein the durations of the sub-frames are binary numbers, i.e. the duration of the second shortest sub-frame is twice the duration of the shortest sub-frame, the third shortest sub-frame is four times the duration of the shortest sub-frame, ...,and the duration of the nth shortest sub-frame is (n-1) times the duration of the shortest sub-frame.

Special rules of classification

For plasma display panels, this code is only to be given if specific details of the generation of intermediate tones using sub-frames are present or the generation of intermediate tones using sub-frames plays a significant role, but not for indicating the presence of a usual generation of intermediate tones using sub-frames in a document.

G09G 3/2025

{the sub-frames having all the same time duration}

Definition statement

This place covers:

Control of a display to display an image having intermediate tones by using sub-frames having all the same duration, i.e. a frame rate control with the intermediate tone being generated by selectively activating a display element in a number of sub-frames.

G09G 3/2029

{the sub-frames having non-binary weights}

Definition statement

This place covers:

Control of a display for displaying an image having intermediate tones by using sub-frames, wherein the durations of the sub-frames are not all binary numbers, i.e. at least for one sub-frame it does not hold that the duration of the nth shortest sub-frame is (n-1) times the duration of the shortest sub-frame.

Special rules of classification

This code is not given if for all the sub-frames the ratio of the duration of one sub-frame to the duration of another sub-frame is a binary number, but one or more of the sub-frames are split in two or more time periods, wherein the time periods are still addressed by the same binary bit.

Illustrative examples:

GB2327798 (ratio of the durations of the display period of the fourth shortest sub-frame and the shortest sub-frame is seven, not eight)

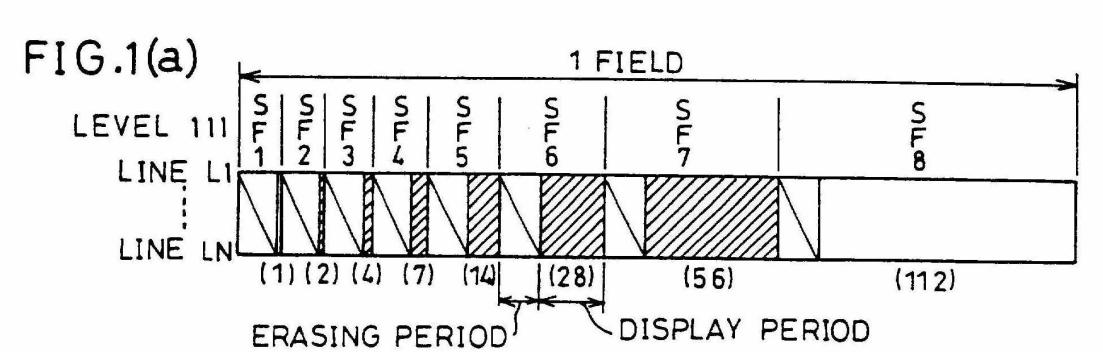

G09G 3/2033

{with splitting one or more sub-frames corresponding to the most significant bits into two or more sub-frames}

Definition statement

This place covers:

Control of a display for displaying an image having intermediate tones by using sub-frames, wherein one or more sub-frames corresponding to the most significant bits are split into two or more time periods, which are still addressed by the same bit.

Special rules of classification

This code is not given if the sub-frame corresponding to the most significant bit is not split, but only other sub-frames corresponding to lower bits are split. This code is also not given if the time periods, into which the sub-frames corresponding to the most significant bits are split, are individually addressed by separate bits, but the code G09G 3/2029 might apply.

Illustrative examples:

EP0774745 (sub-frame with the longest duration and corresponding to the most significant bit is split in two periods controlled by the same most significant bit)

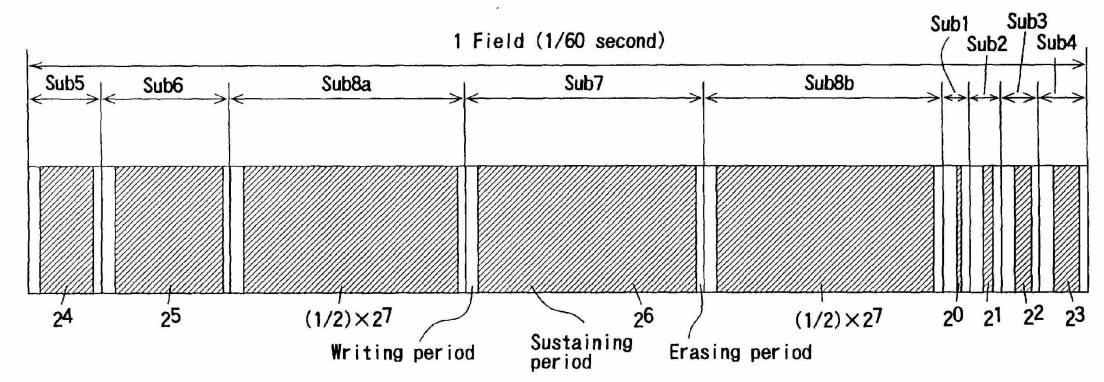

G09G 3/2037

{with specific control of sub-frames corresponding to the least significant bits}

Definition statement

This place covers:

Control of a display for displaying an image having intermediate tones by using sub-frames, wherein one or more sub-frames corresponding to the least significant bits are specifically controlled to increase the number of intermediate tones without applying to narrow pulses.

Special rules of classification

This code is not given if the sub-frame corresponding to the least significant bit is not specifically controlled, but only other sub-frames corresponding to higher bits.

Illustrative examples:

US5751379 (sub-frame with the shortest duration and corresponding to the least significant bit is displayed only every second frame)

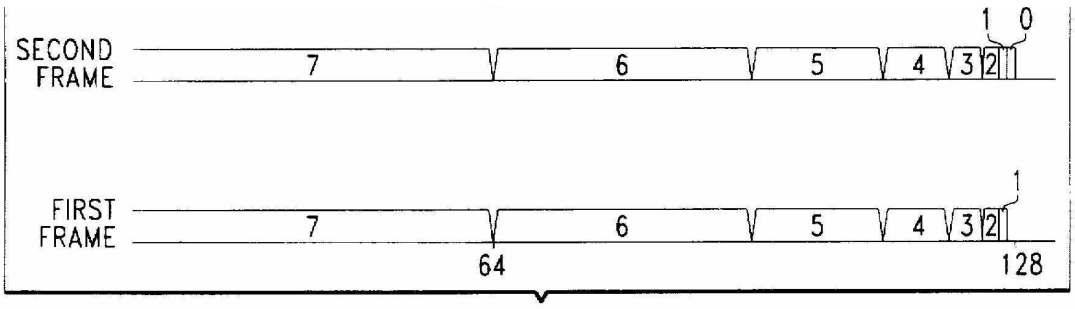

G09G 3/204

{the sub-frames being organized in consecutive sub-frame groups}

Definition statement

This place covers:

Control of a display for displaying an image having intermediate tones by using sub-frames, wherein the sub-frames are organized in consecutive sub-frame groups, e.g. the groups being separated by a

pause period, or the sub-frames within one group having a common addressing scheme, or a specific order with respect to the size of the corresponding bits.

Illustrative examples:

EP1710777 (sub-frames of one frame are arranged in two groups divided by an idle period and with increasing durations within each group)

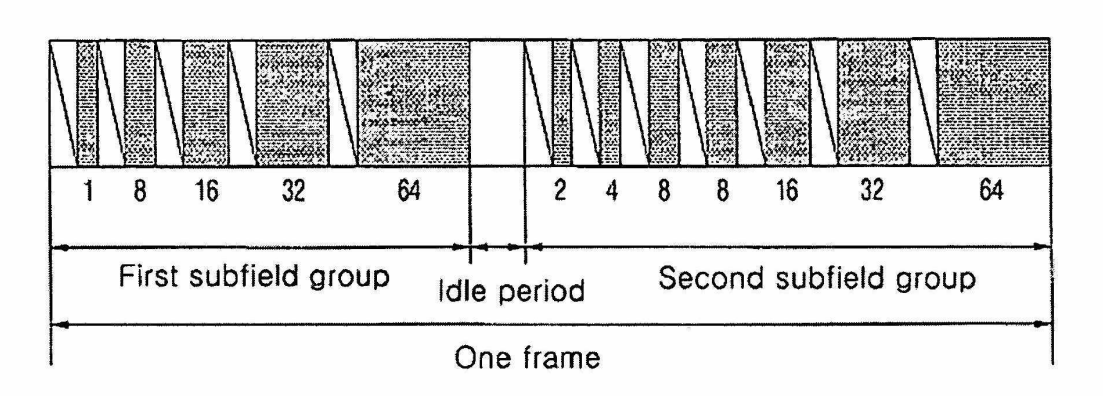

G09G 3/2044

{using dithering}

Definition statement

This place covers:

Control of a display for displaying an image having intermediate tones by using dithering, i.e. by adding a noise signal to the image signal or the gradation threshold.

References

Limiting references

This place does not cover:

Control of a display to display an image having intermediate tones by frame rate control or temporal dithering, i.e. the intermediate tone is generated by selectively activating a display element in a number of frames	G09G 3/2018
Control of a display for displaying an image having intermediate tones by using error diffusion, i.e. distributing the quantization error to neighbouring display elements	G09G 3/2059

G09G 3/2048

{with addition of random noise to an image signal or to a gradation threshold}

Definition statement

This place covers:

Control of a display for displaying an image having intermediate tones by using dithering, wherein the noise signal added to the image signal or the gradation threshold is random noise.

G09G 3/2051

{with use of a spatial dither pattern}

Definition statement

This place covers:

Control of a display for displaying an image having intermediate tones by using dithering, wherein the noise signal added to the image signal or the gradation threshold is a spatial dither pattern applied to the display element and its neighbouring display elements.

G09G 3/2055

{the pattern being varied in time}

Definition statement

This place covers:

Control of a display for displaying an image having intermediate tones by using dithering, wherein the noise signal added to the image signal or the gradation threshold is a spatial dither pattern applied to the display element and its neighbouring display elements, and the spatial dither pattern is varied in time, e.g. from one frame to the next frame, and cyclically, i.e. the same pattern is reused after a certain time period.

G09G 3/2059

{using error diffusion}

Definition statement

This place covers:

Control of a display for displaying an image having intermediate tones by using error diffusion in space, i.e. distributing the quantization error to neighbouring display elements.

Illustrative examples:

EP1587053 (error diffusion in space; sections 0027, 0028).

G09G 3/2062

{using error diffusion in time}

Definition statement

This place covers:

Control of a display for displaying an image having intermediate tones by using error diffusion in time, i.e. distributing the quantization error to the next frame.

Illustrative examples:

EP1583063 (error diffusion in time; section 0143).

G09G 3/2066

{with error diffusion in both space and time}

Definition statement

This place covers:

Control of a display for displaying an image having intermediate tones by using error diffusion in space and time, i.e. distributing the quantization error to the neighbouring display elements and the next frame.

Illustrative examples:

US2009/0128693 (quantization error is distributed within the same frame to neighbouring display elements and to the same display element in the next frame)

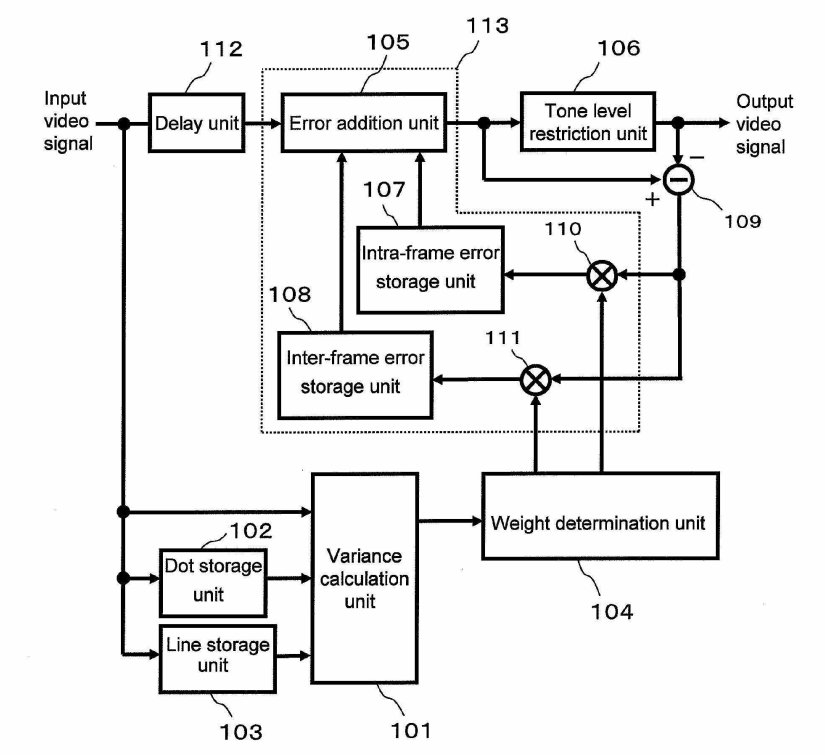

G09G 3/207

{by domain size control (G09G 3/3637 takes precedence)}

Definition statement

This place covers:

Control of a display to display an image having intermediate tones by varying the area of a display element, which is in one display state, relative to the remaining area of the display element, which is in another display state.

References

Limiting references

This place does not cover:

Control of a display using liquid crystals having memory effect to display an image having intermediate tones by varying the area of the display element, which is in one display state, relative to the remaining area of the display element, which is in another display state	G09G 3/3637

Informative references

Attention is drawn to the following places, which may be of interest for search:

Portions of a pixel that are physically separated or separately controlled are not a case of generating intermediate tones by domain-size control but by using sub-pixels	G09G 3/2074

Illustrative examples:

US2005174623 (modulation of the intermediate tone displayed by an electrochromic display element by varying its coloration area)

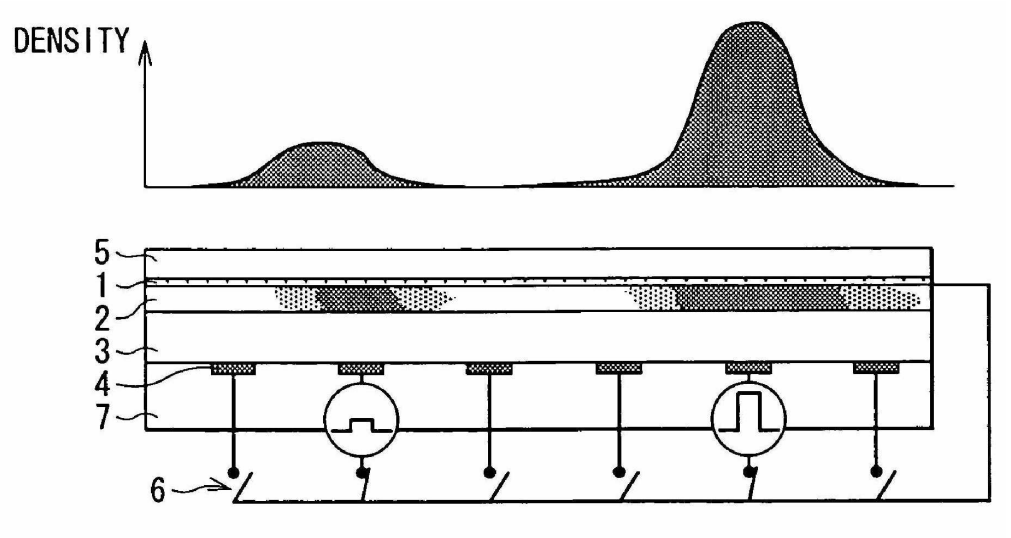

G09G 3/2074

{using sub-pixels}

Definition statement

This place covers:

Control of a display to display an image having intermediate tones by display elements (pixel) having two or more physically separated or separately controllable portions (sub-pixels).

References

Limiting references

This place does not cover:

Control of a display using liquid crystals having memory effect to display an image having intermediate tones by display elements (pixels) having two or more separately controllable or physically separated portions (sub-pixels)	G09G 3/364

Informative references

Attention is drawn to the following places, which may be of interest for search:

Portions of a pixel that are not physically separated and not separately controlled, but exploit instead a stepped variation across the pixel of a physical variable that affects the state of the pixel itself, are not a case of sub-pixels but of domain size control	G09G 3/207

Illustrative examples:

US2002/0195969 (modulation of the intermediate tone by providing two separately selectable organic electroluminescent display element with different areas for each image pixel)

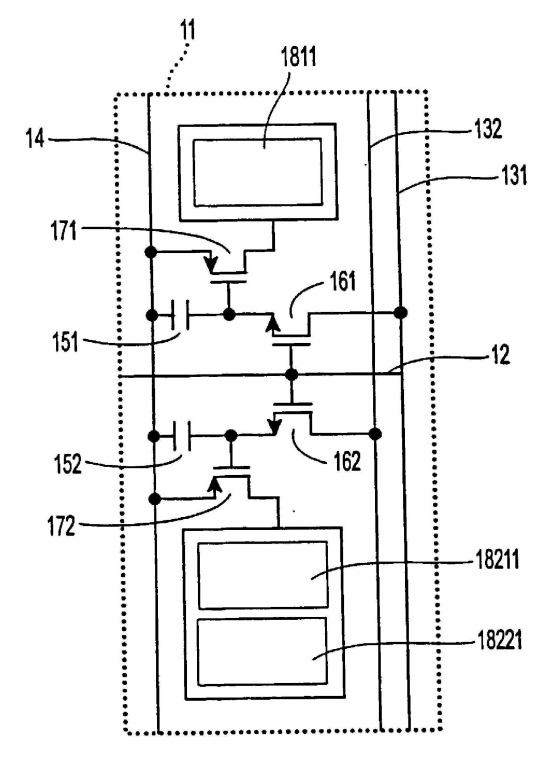

G09G 3/2077

{by a combination of two or more gradation control methods}

Definition statement

This place covers:

Control of a display to display an image having intermediate tones by using two or more methods of generating the intermediate tones together, e.g. by using both sub-pixels and error diffusion.

Special rules of classification

Additional codes within G09G 3/2007 should also be given, to indicate which methods of generating the intermediate tones are combined. Code G09G 3/2011 is only given if specific details of the amplitude modulation are present.

As using sub-fields for the control of a plasma display panel to display an image having intermediate tones is a standard method, this code is not given for the combination of using sub-fields with a single other method of generating the intermediate tones in a plasma display panel.

Illustrative examples:

US2009/0128473 (combination of amplitude modulation with using sub-pixels for generating intermediate tones in an LCD)

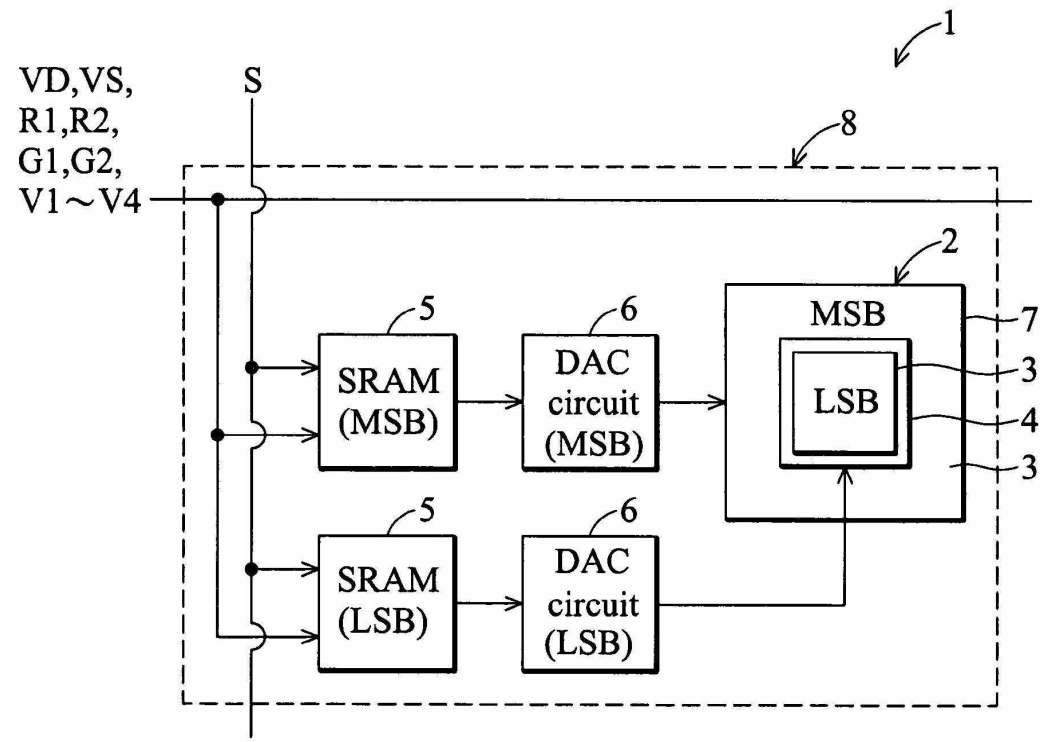

G09G 3/2081

{with combination of amplitude modulation and time modulation (space and time error diffusion G09G 3/2066)}

Definition statement

This place covers:

Control of a display to display an image having intermediate tones by using amplitude modulation and time modulation.

References

Limiting references

This place does not cover:

Control of a display for displaying an image having intermediate tones by using error diffusion in space and time	G09G 3/2066

Special rules of classification

Additional codes of G09G 3/2014 or within G09G 3/2018 should also be given to indicate which time modulation method of generating the intermediate tones is used, while the code G09G 3/2011 is only given if specific details of the amplitude modulation are present.

Illustrative examples:

US2009/0051708 (combination of amplitude modulation with pulse width modulation for generating intermediate tones in an OLED display)

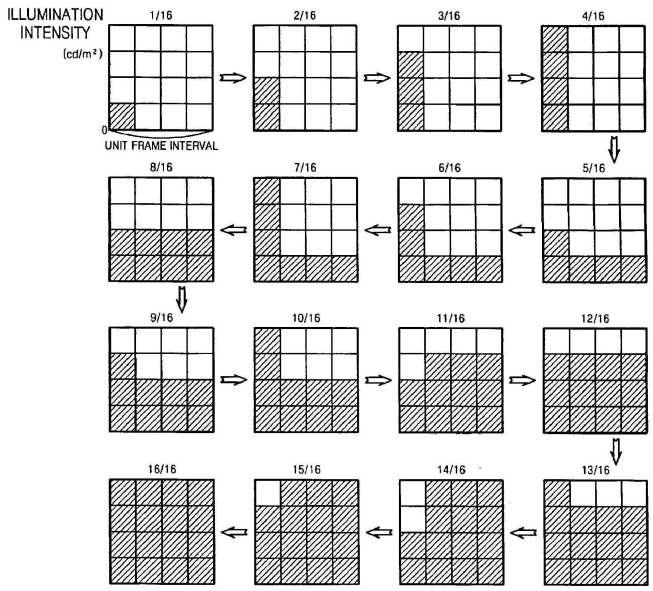

G09G 3/2092

{Details of a display terminals using a flat panel, the details relating to the control arrangement of the display terminal and to the interfaces thereto (suitable for both CRT and flat panel G09G 5/003; specific for a CRT G09G 1/165)}

Definition statement

This place covers:

Details of the control of a display terminal in a monitor-architecture using a flat panel display, e.g. arrangements for processing of the image data as an adaption for display on the flat panel, or setting of parameters for a flat panel display.

References

Limiting references

This place does not cover:

Details of the control of a display terminal in a monitor-architecture using a CRT	G09G 1/165
Details of the control of a display terminal in a monitor-architecture in general suitable for both CRT and flat panel	G09G 5/003

Informative references

Attention is drawn to the following places, which may be of interest for search:

Control of a display for displaying a coloured image in general	G09G 5/02

Special rules of classification

Illustrative example of subject matter classified in this group:

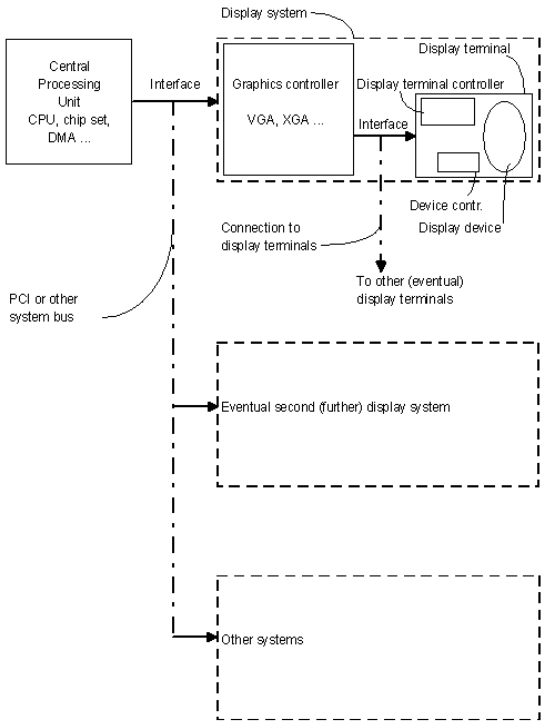

Glossary of terms

In this place, the following terms or expressions are used with the meaning indicated:

Display terminal	Means an apparatus connected to a source of display data (usually a graphics controller of a computer, or directly to the computer itself) adapted to display images generated by this source of data. In general a "Display terminal" is an arrangement including a display device (e.g. a CRT with its driving electronic or a flat panel including its row and column drivers), a display device controller (the hardware and software (usually a microprocessor) that controls the display device and that allows its functioning by, for example, generating the signals that are needed to bring the data to the drivers) and a display terminal controller (the hardware and software used to control the display terminal as a whole and to interface the display terminal to the graphics controller, to adapt data and control signals, for example in an LCD driven by a VGA type graphics controller).

Monitor-architecture	means a source of pixelwise image data (rendered data, e.g. RGB data in a VGA video controller; see "Graphics controller" in below figure), e.g. obtained by transforming high-level image descriptions (e.g. graphics primitives) into pixel-wise image data, or by handling analogue video data, or by decompressing compressed video data, an image display unit, which receives said pixel-wise image data (see "Display terminal" in below figure), and an interface between said source of pixelwise image data and said image display unit (commonly RGB-cable with sync-signals, but also other interfaces like USB-bus). A monitor-architecture cannot be identified, if it is not clear where the processing described is located (that is also outside said image display unit); or if the structure of the display system has to be modified if the technology of the display changes (e.g. in a mobile telephone, in which the drivers are normally controlled by the main CPU).

G09G 3/2096

{Details of the interface to the display terminal specific for a flat panel (suitable for both CRT and flat panel G09G 5/006; specific for a CRT G09G 1/167)}

Definition statement

This place covers:

Details of an interface to a display terminal in a monitor-architecture using a flat panel display, e.g. arrangements for processing of the image data as an adaption for display on the flat panel, or setting of parameters for a flat panel display.

References

Limiting references

This place does not cover:

Details of an interface to a display terminal suitable for both CRT and flat panel in a monitor-architecture in general	G09G 5/006

G09G 3/22

using controlled light sources

Definition statement

This place covers:

Control of displays using controlled light sources as display elements arranged in a matrix.

References

Informative references

Attention is drawn to the following places, which may be of interest for search:

Control of displays using controlled light sources for displaying a character composed by a fixed number of display elements as segments or dots	G09G 3/06

Examples:

US5920154 (control of a field emission matrix display)

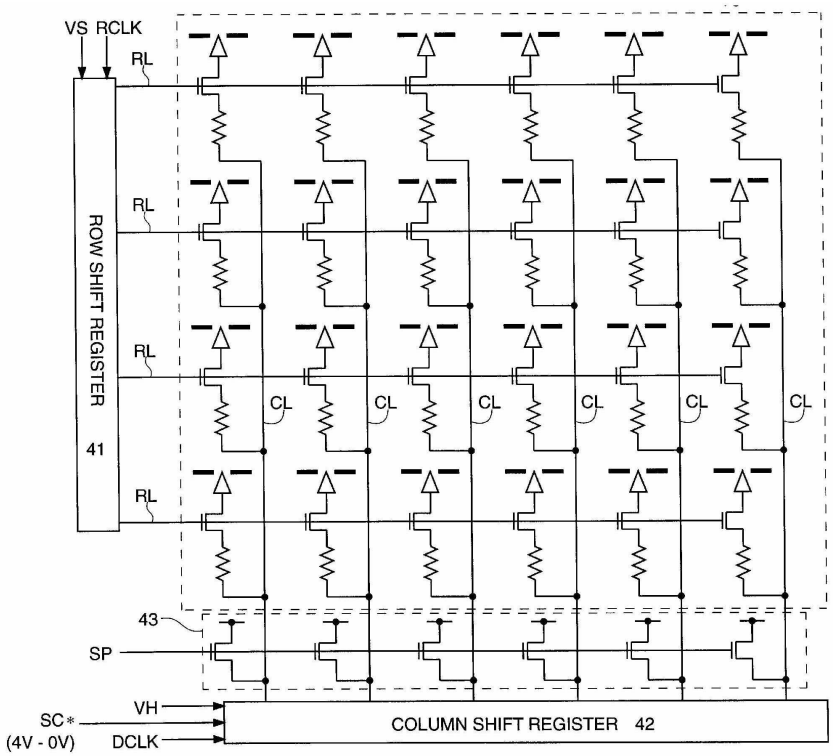

Special rules of classification

In this group, documents concerning the control of character displays using controlled light sources not covered by any of the groups G09G 3/24 - G09G 3/30 are classified, e.g. the control of vacuum fluorescent matrix displays or of field emission matrix displays.

G09G 3/24

using incandescent filaments

Definition statement

This place covers:

Control of displays using incandescent filaments, i.e. incandescent light bulbs, as display elements arranged in a matrix.

References

Informative references

Attention is drawn to the following places, which may be of interest for search:

Control of displays using incandescent filaments, i.e. incandescent light bulbs, for displaying a character composed by a fixed number of display elements as segments or dots	G09G 3/08

Special rules of classification

Illustrative example: US5920154 (control of an incandescent lamp matrix display)

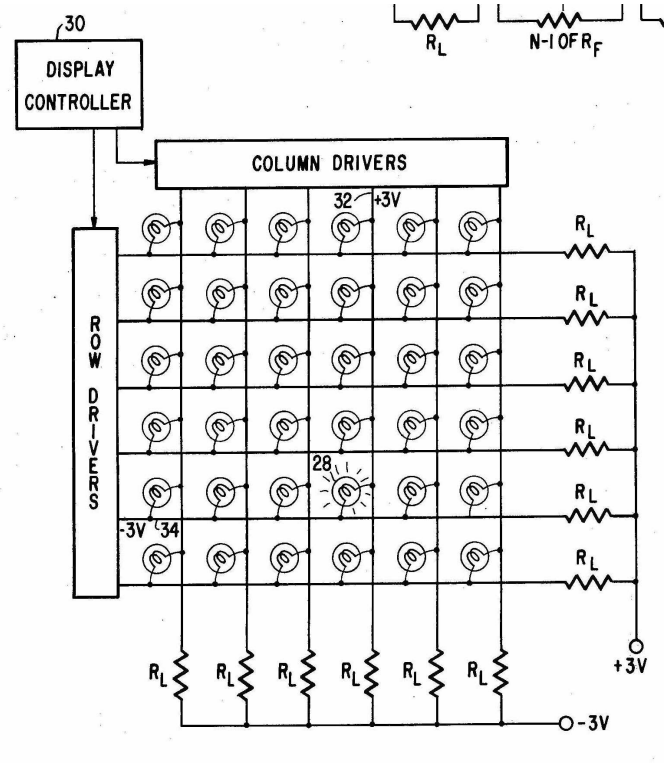

G09G 3/26

to give the appearance of moving signs

Definition statement

This place covers:

Control of displays using incandescent filaments, i.e. incandescent light bulbs, as display elements arranged in a matrix, which are controlled to give the appearance of a moving sign.

References

Informative references

Attention is drawn to the following places, which may be of interest for search:

Control of flat panel displays to give the appearance of moving signs in general	G09G 3/004

G09G 3/28

using luminous gas-discharge panels, e.g. plasma panels

Definition statement

This place covers:

Control of displays using luminous gas-discharge cells, e.g. luminous plasma discharge cells, as display elements arranged in a matrix.

References

Informative references

Attention is drawn to the following places, which may be of interest for search:

Control of displays using gas tubes for displaying a character composed by a fixed number of display elements as segments or dots	G09G 3/10

G09G 3/2803

{Display of gradations (G09G 3/288 takes precedence)}

Definition statement

This place covers:

Control of displays using luminous gas-discharge cells having intermediate tones with aspects specific for displays using luminous gas-discharge cells.

References

Limiting references

This place does not cover:

Using alternating current (AC) panels	G09G 3/288

Informative references

Attention is drawn to the following places, which may be of interest for search:

Control of a display to display an image having intermediate tones with aspects specific for flat panel displays in general	G09G 3/2007

Special rules of classification

For a control of the brightness of a display as a whole, the Indexing Code G09G 2320/0626 should be given in addition.

Illustrative examples:

US5835072 (different intermediate tones are generated in a plasma display panel by varying the value of the voltage applied to the address electrodes during the addressing phase, and a subsequent sustain phase with the application of sustain pulses having different values)

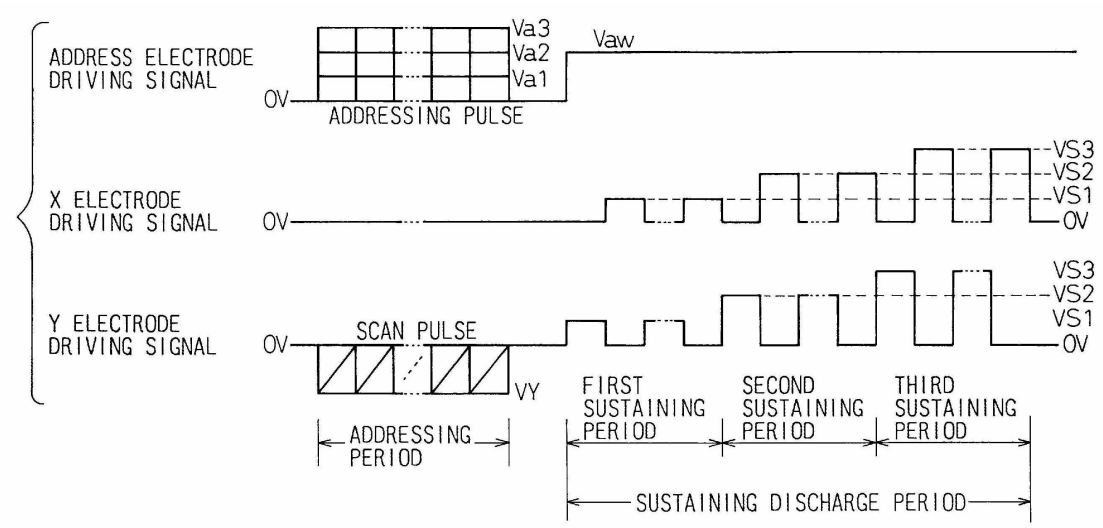

G09G 3/2807

with discharge activated by high-frequency signals specially adapted therefor

Definition statement

This place covers:

Control of displays using luminous gas-discharge cells as display elements arranged in a matrix, wherein the discharge is caused by the application of signals to the gas-discharge cell having a particular high frequency, i.e. significantly higher than known from other displays using luminous gas-discharge cells as display elements arranged in a matrix.

Illustrative examples:

US2004/0056827 (application of pulses with a frequency of 1MHz to the address electrodes during the sustaining phase)

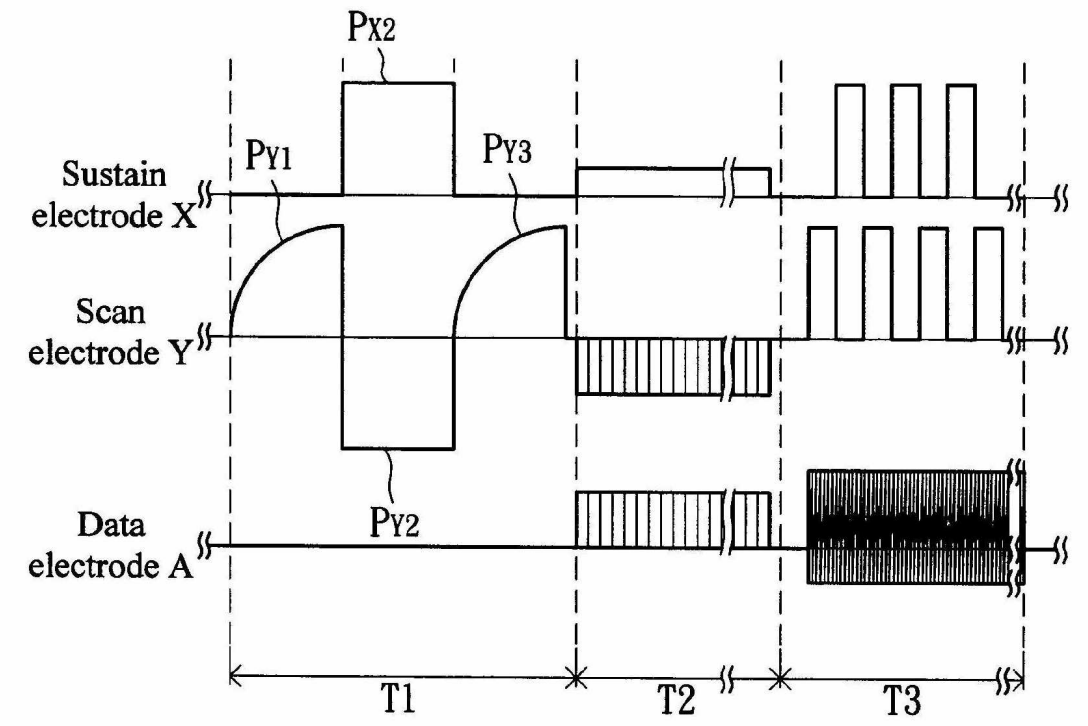

G09G 3/2813

using alternating current [AC] - direct current [DC] hybrid-type panels

Definition statement

This place covers:

Control of displays using luminous gas-discharge cells as display elements arranged in a matrix, wherein in a discharge cell, some of the electrodes that play a role during the discharge are in contact with the ionized gas (as in DC type panels), some are not (as in AC type panels).

Illustrative examples:

US2004/0207572 (control of a plasma display panel with scan, sustain, and address electrodes not in contact with the ionized gas, and further electrodes in contact with the ionized gas)

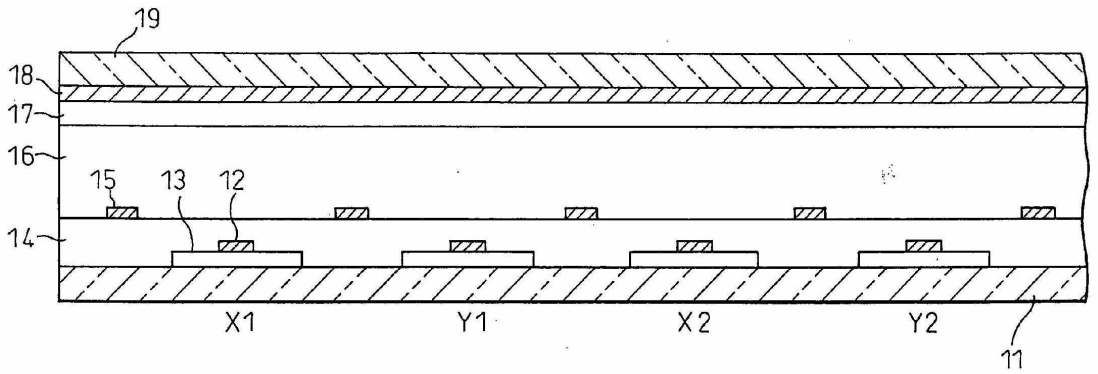

G09G 3/282

using DC panels

Definition statement

This place covers:

Control of displays using luminous gas-discharge cells as display elements arranged in a matrix, wherein in a discharge cell, the electrodes that play a role during the discharge are in contact with the ionized gas.

Illustrative examples:

US5332949 (control of a plasma display panel with scan, sustain, and address electrodes in contact with the ionized gas)

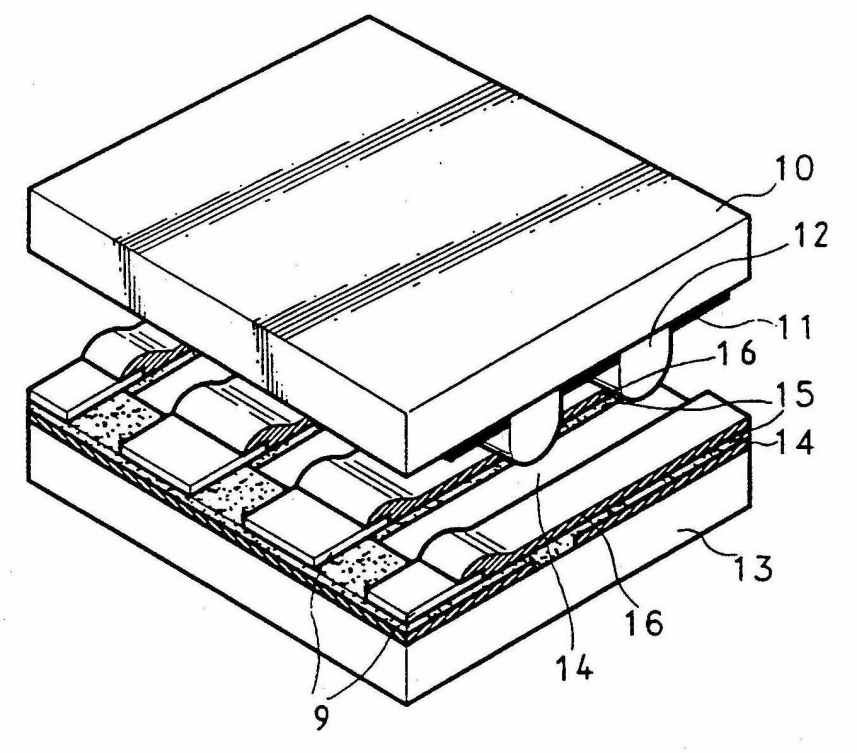

G09G 3/285

using self-scanning

Definition statement

This place covers:

Control of displays using luminous gas-discharge cells as display elements arranged in a matrix in a DC panel, wherein the discharge is sequential transferred from an input position to a further display position.

G09G 3/288

using AC panels

Definition statement

This place covers:

Control of displays using luminous gas-discharge cells as display elements arranged in a matrix in an AC panel, wherein in a discharge cell the electrodes that play a role during the discharge are not in contact with the ionized gas.

Special rules of classification

Only to be given in exceptional cases, when none of the subgroups of G09G 3/288 applies.

G09G 3/29

using self-shift panels {with sequential transfer of the discharges from an input position to a further display position (tubes therefor H01J 17/49)}

Definition statement

This place covers:

Control of displays using luminous gas-discharge cells as display elements arranged in a matrix, wherein the discharge is sequential transferred from an input position to a further display position.

References

Informative references

Attention is drawn to the following places, which may be of interest for search:

Display panels with cold-cathode tubes	H01J 17/49

Examples:

US5212472 (discharge is sequentially transferred, as discharge in the previous cell generates charges to enable a discharge in the adjacent next cells)

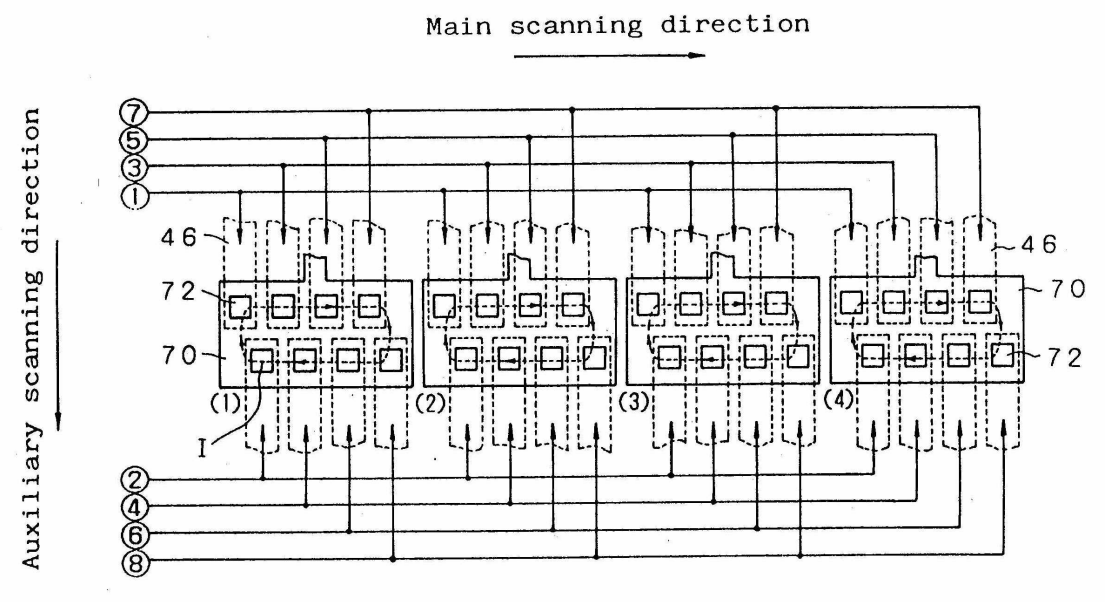

G09G 3/291

controlling the gas discharge to control a cell condition, e.g. by means of specific pulse shapes

Definition statement

This place covers:

Control of displays using luminous gas-discharge cells as display elements arranged in a matrix in an AC panel with details of the control of the gas-discharge cell or the shape of the pulses applied to the electrodes of the gas-discharge cell.

Special rules of classification

This group is not used for classification. See the subgroups of **G09G3/288C2**, **G09G3/288C4**, or **G09G3/288C6**.

G09G 3/292

for reset discharge, priming discharge or erase discharge occurring in a phase other than addressing

Definition statement

This place covers:

Control of displays using luminous gas-discharge cells as display elements arranged in a matrix in an AC panel with details of the control of the gas-discharge cell or the shape of the pulses applied to the electrodes of the gas-discharge cell for generating an erase discharge outside the addressing phase, a reset discharge, or a priming discharge.

Special rules of classification

This group is not used for classification; see subgroups, i.e. **G09G3/288C2E**, **G09G3/288C2P**, or **G09G3/288C2R**.

G09G 3/2922

{Details of erasing}

Definition statement

This place covers:

Control of displays using luminous gas-discharge cells as display elements arranged in a matrix in an AC panel with details of the control of the gas-discharge cell or the shape of the pulses applied to the electrodes of the gas-discharge cell for generating an erase discharge outside the addressing phase and outside the reset phase.

References

Limiting references

This place does not cover:

Control of displays using luminous gas-discharge cells as display elements arranged in a matrix in an AC panel with details of the control of the gas-discharge cell or the shape of the pulses applied to the electrodes of the gas-discharge cell for generating a priming discharge at the time of powering up the display or at regular intervals, wherein the priming discharge is combined with an erase discharge	**G09G3/288C2P**

Control of displays using luminous gas-discharge cells as display elements arranged in a matrix in an AC panel with details of the control of the gas-discharge cell or the shape of the pulses applied to the electrodes of the gas-discharge cell for generating an erase discharge during the reset/initialising phase, i.e. at the end of the sustain period or before the address phase	**G09G3/288C2R**
Control of displays using luminous gas-discharge cells as display elements arranged in a matrix in an AC panel with details of the control of the gas-discharge cell or the shape of the pulses applied to the electrodes of the gas-discharge cell for generating an erase discharge during the addressing phase	**G09G3/288C4E**

Illustrative examples:

US2002/0050794 (erasing discharge is generated to remove charges in those discharge cells, in which no address discharge is generated in the preceding addressing phase in order to avoid an erroneous discharge in the subsequent sustaining phase)

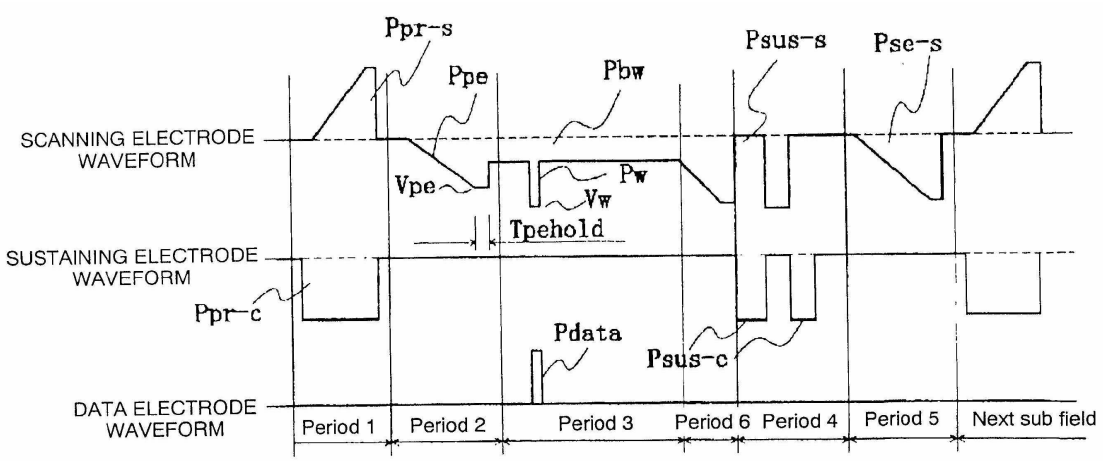

Special rules of classification

This code is to be given, if the erase discharge is generated at least once per frame.

G09G 3/2925

{Details of priming}

Definition statement

This place covers:

Control of displays using luminous gas-discharge cells as display elements arranged in a matrix in an AC panel with details of the control of the gas-discharge cell or the shape of the pulses applied to the electrodes of the gas-discharge cell for generating a priming discharge at the time of powering up the display or at regular intervals.

References

Limiting references

This place does not cover:

Control of displays using luminous gas-discharge cells as display elements arranged in a matrix in an AC panel with details of the control of the gas-discharge cell or the shape of the pulses applied to the electrodes of the gas-discharge cell for generating a reset discharge, i.e. for initialising the gas-discharge cell as a preparation of the subsequent addressing phase, during every sub-frame, every frame, or every multiple frames	**G09G3/288C2R**

Illustrative examples:

U 2008/0284684 (applying pulse with larger maximum value during the initialising phase in a start-up mode after the powering on of a plasma display panel than in a normal mode)

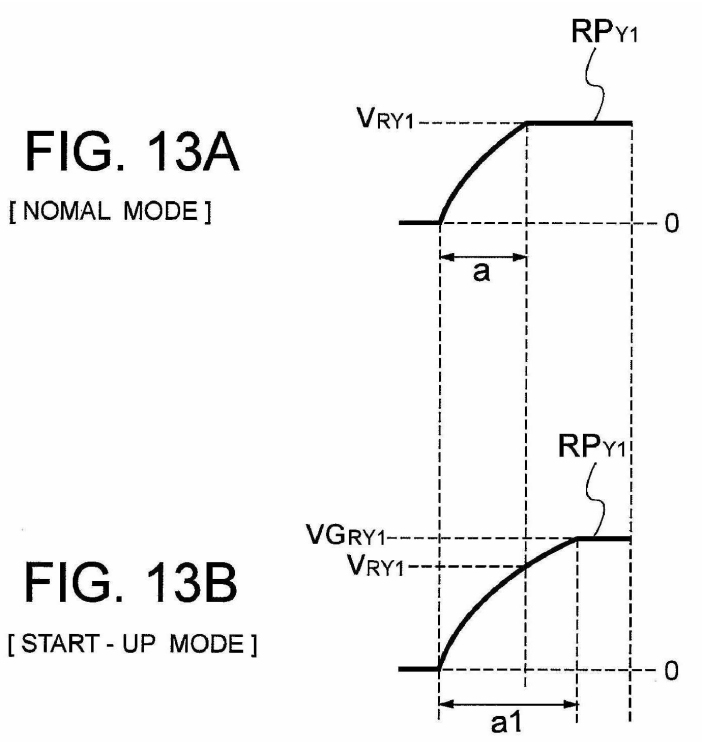

Special rules of classification

This code is to be given, if a discharge for priming, i.e. for generating charges in the discharge cell, is generated at the time of powering up the display or at regular intervals.

G09G 3/2927

{Details of initialising}

Definition statement

This place covers:

Control of displays using luminous gas-discharge cells as display elements arranged in a matrix in an AC panel with details of the control of the gas-discharge cell or the shape of the pulses applied to

the electrodes of the gas-discharge cell for generating a reset discharge, i.e. for initialising the gas-discharge cell as a preparation of the subsequent addressing phase.

References

Limiting references

This place does not cover:

Control of displays using luminous gas-discharge cells as display elements arranged in a matrix in an AC panel with details of the control of the gas-discharge cell or the shape of the pulses applied to the electrodes of the gas-discharge cell for generating a priming discharge at the time of powering up the display or at regular intervals, wherein the regular intervals are longer than a small number of frame periods	**G09G3/288C2P**

Illustrative examples:

US2003/0174102 (applying pulses with rising and falling slope to the scan and sustain electrode during a reset phase for generating discharges in order to provide the same wall charge conditions in all the discharge cells as a preparation for the subsequent addressing phase)

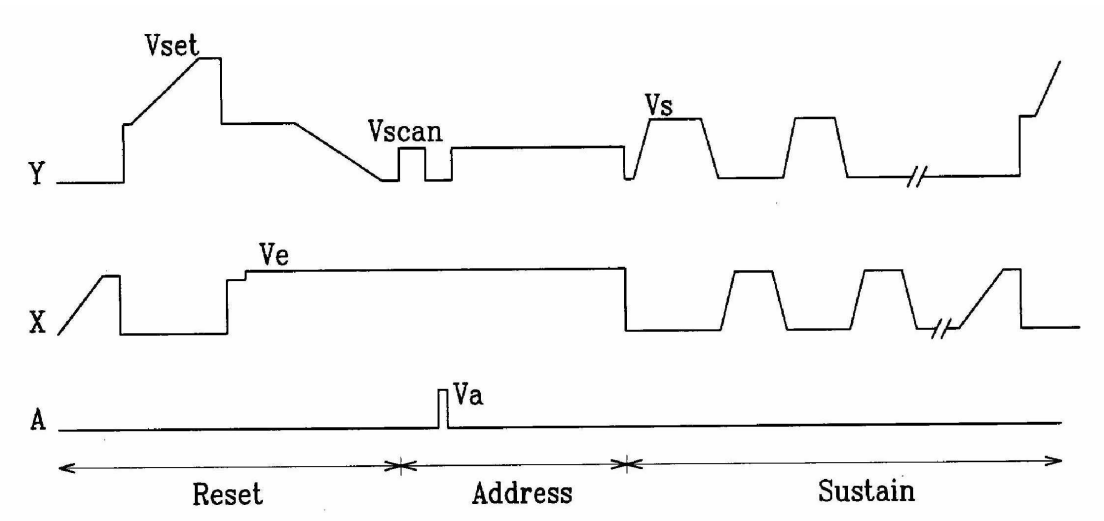

Special rules of classification

This code is to be given, if a reset discharge, i.e. for initialising the gas-discharge cell as a preparation of the subsequent addressing phase, is generated during every sub-frame, every frame, or every multiple frames.

G09G 3/293

for address discharge

Definition statement

This place covers:

Control of displays using luminous gas-discharge cells as display elements arranged in a matrix in an AC panel with details of the control of the gas-discharge cell or the shape of the pulses applied to the electrodes of the gas-discharge cell for generating an address discharge, i.e. an discharge for selecting the discharge cell according to the display data so that a sustain discharge with light emission takes place in the subsequent sustain phase corresponding to the selection in the addressing phase.

Special rules of classification

Different control or pulse shapes for different sub-frames are to be indicated by the code G09G 3/2022.

G09G 3/2932

{Addressed by writing selected cells that are in an OFF state}

Definition statement

This place covers:

Control of displays using luminous gas-discharge cells as display elements arranged in a matrix in an AC panel with details of the control of the gas-discharge cell or the shape of the pulses applied to the electrodes of the gas-discharge cell for generating an address discharge, wherein the generation of the address discharge generates sufficient wall charges in the addressed cell so that a sustain discharge with light emission takes place in the subsequent sustain phase.

Special rules of classification

Different control or pulse shapes for different sub-frames are to be indicated by the code G09G 3/2022.

Illustrative examples:

US2003/0102814 (a discharge generated selectively only in those discharge cells during an addressing phase having a pulse applied to the address electrode together with a pulse applied to the scanning electrode generates wall charges, which enable a lighting discharge in these selected cells during the subsequent sustaining phase)

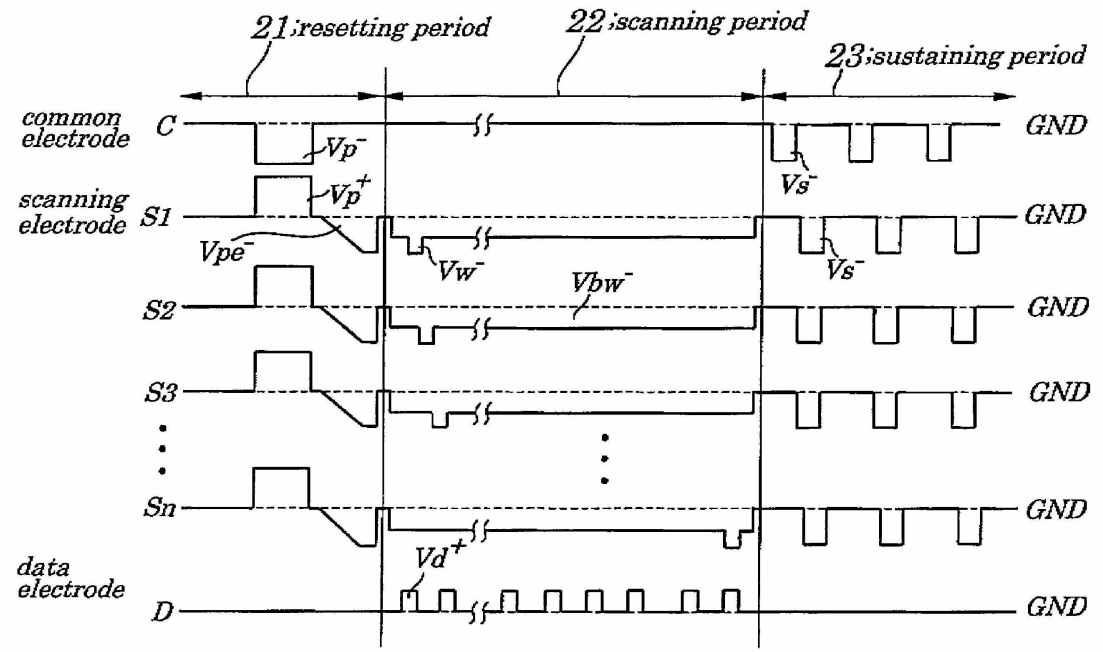

G09G 3/2935

{Addressed by erasing selected cells that are in an ON state}

Definition statement

This place covers:

Control of displays using luminous gas-discharge cells as display elements arranged in a matrix in an AC panel with details of the control of the gas-discharge cell or the shape of the pulses applied to the electrodes of the gas-discharge cell for generating an address discharge, wherein the generation of the address discharge reduces or erases the wall charges in the addressed cell so that no sustain discharge with light emission takes place in the subsequent sustain phase.

Special rules of classification

Different control or pulse shapes for different sub-frames are to be indicated by the code G09G 3/2022.

Illustrative examples:

EP0866439 (after generating wall charges in all the discharge cells during the initialisation phase, a discharge erases the wall charges selectively only in those discharge cells during an addressing phase having a pulse applied to the address electrode together with a pulse applied to the scanning electrode, which disables a lighting discharge in these selected cells during the subsequent sustaining phase)

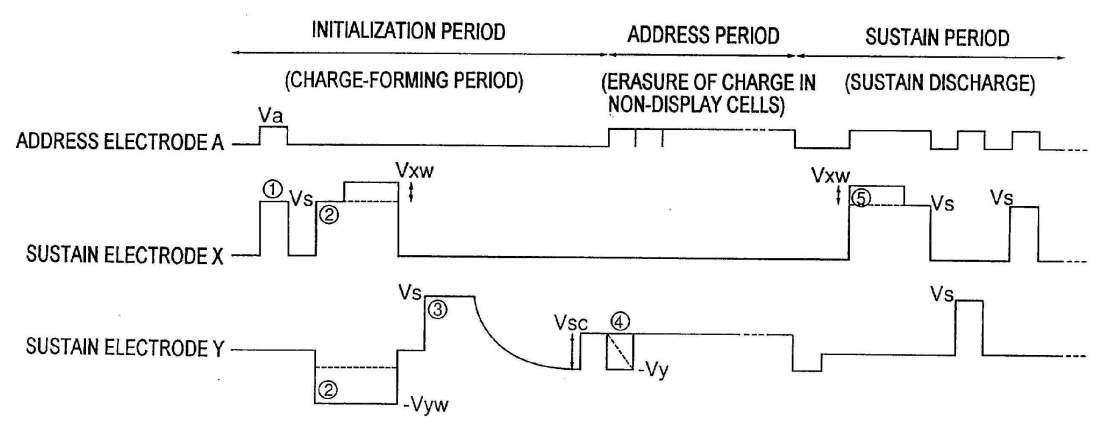

G09G 3/2937

{being addressed only once per frame}

Definition statement

This place covers:

Control of displays using luminous gas-discharge cells as display elements arranged in a matrix in an AC panel with details of the control of the gas-discharge cell or the shape of the pulses applied to the electrodes of the gas-discharge cell for generating an address discharge, wherein the generation of the address discharge takes place only in one sub-frame of a frame

Illustrative examples:

US2002/0036603 (as the resetting operation is performed only in the first sub-frame, in the following sub-frames only discharge cells not addressed by erasing in the preceding sub-frames can be

selected in the addressing phase of a sub-frame by erasing to no longer emit light in the sustaining phase of the sub-frame and all the further sub-frames of the frame)

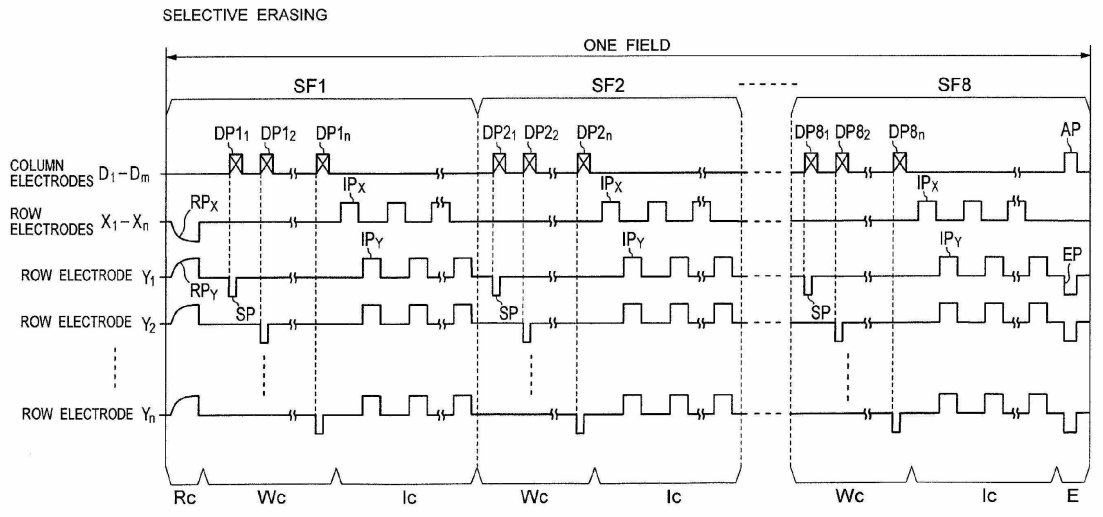

G09G 3/294

for lighting or sustain discharge

Definition statement

This place covers:

Control of displays using luminous gas-discharge cells as display elements arranged in a matrix in an AC panel with details of the control of the gas-discharge cell or the shape of the pulses applied to the electrodes of the gas-discharge cell for generating an lighting or sustain discharge, i.e. a discharge for lighting the discharge cells selected during the addressing phase, wherein after the discharge enough charges remain in the cell to generate a further discharge with the next pulse of the same shape, and wherein, if an image having intermediate tones is generated by using sub-frames, the number of lighting discharges corresponds to the grey scale bit of the sub-frame.

Special rules of classification

Different control or pulse shapes for different sub-frames are to be indicated by the code G09G 3/2022.

G09G 3/2942

{with special waveforms to increase luminous efficiency}

Definition statement

This place covers:

Control of displays using luminous gas-discharge cells as display elements arranged in a matrix in an AC panel with details of the control of the gas-discharge cell or the shape of the pulses applied to the electrodes of the gas-discharge cell for generating an lighting or sustain discharge, wherein the luminous efficiency of the panel is increased by applying special waveforms, for instance by waveforms generate two luminous discharges with a single pulse.

Special rules of classification

Different control or pulse shapes for different sub-frames are indicated by the code G09G 3/2022.

Illustrative examples:

US2002/0008680 (increase of the luminous efficiency by generating a light emitting discharge with the rising and the falling slope of each sustaining pulse)

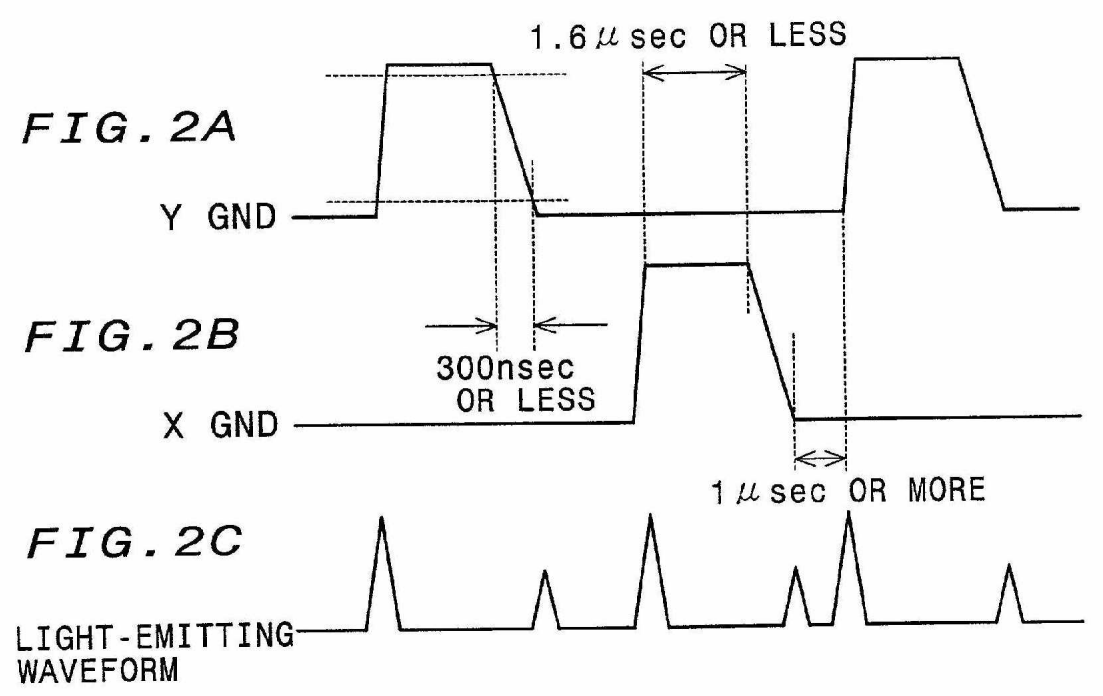

G09G 3/2944

{by varying the frequency of sustain pulses or the number of sustain pulses proportionally in each subfield of the whole frame}

Definition statement

This place covers:

Control of displays using luminous gas-discharge cells as display elements arranged in a matrix in an AC panel with details of the control of the gas-discharge cell or the shape of the pulses applied to the electrodes of the gas-discharge cell for generating an lighting or sustain discharge, wherein the frequency of the sustain pulses or the number of sustain pulses is varied by the same factor for each subfield of a frame.

Illustrative examples:

EP1065645 (variation of the sustain pulse number with the same factor for all the sub-frames)

TOTAL SUSTAINING PULSE NUMBER	SUSTAINING PULSE NUMBERS OF RESPECTIVE SF				
	SF1	SF2	SF3	SF4	SF5
31	1	2	4	8	16
93	3	6	12	24	48
158	5	11	21	40	81
248	8	16	32	64	128
312	10	21	40	81	160

G09G 3/2946

{by introducing variations of the frequency of sustain pulses within a frame or non-proportional variations of the number of sustain pulses in each subfield}

Definition statement

This place covers:

Control of displays using luminous gas-discharge cells as display elements arranged in a matrix in an AC panel with details of the control of the gas-discharge cell or the shape of the pulses applied to the electrodes of the gas-discharge cell for generating an lighting or sustain discharge, wherein the frequency of the sustain pulses or the number of sustain pulses is varied for at least one subfield of a frame differently from the other subfields of the frame.

Illustrative examples:

US2005/0219158 (variation of the sustain frequency for a sub-frame according to the display load of the sub-frame, i.e. the number of cells to emit light during the sub-frame)

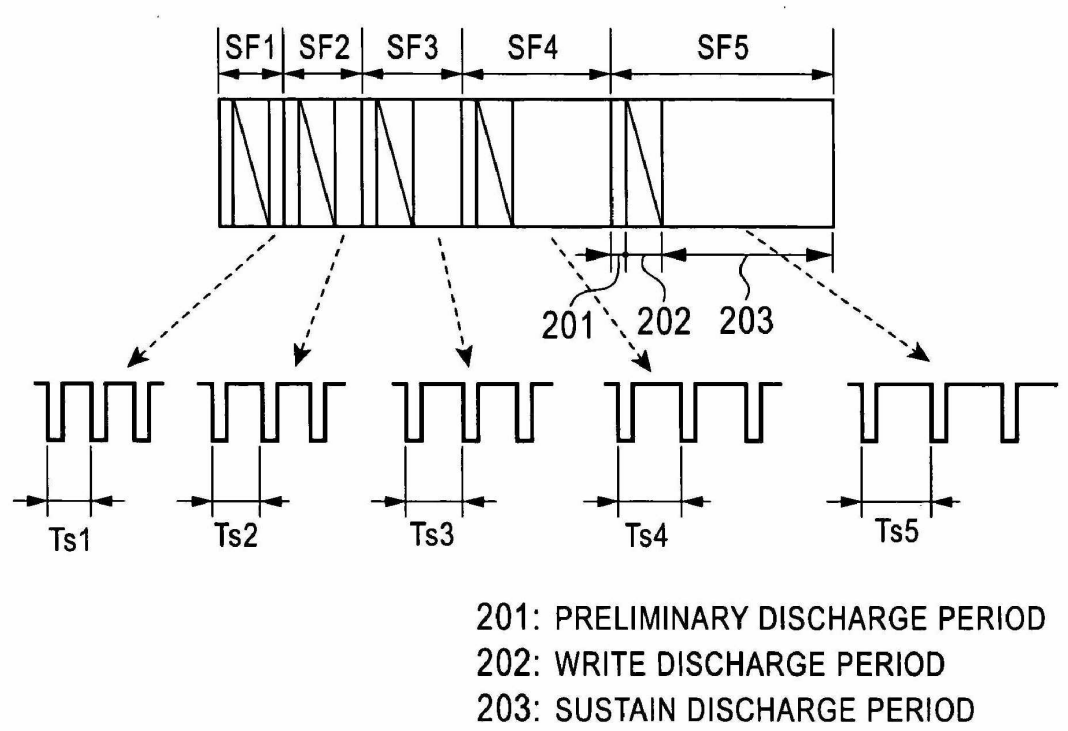

G09G 3/2948

{by increasing the total sustaining time with respect to other times in the frame}

Definition statement

This place covers:

Control of displays using luminous gas-discharge cells as display elements arranged in a matrix in an AC panel with details of the control of the gas-discharge cell or the shape of the pulses applied to the electrodes of the gas-discharge cell for generating an lighting or sustain discharge, wherein the time period available for the sustaining phase is increased with respect to other time periods in the frame, e.g. pulses in the initialising phase or the addressing phase are modified in order to shorten the time periods needed for these phases and thus enable an increase in light emission by a longer time period for the sustain phase.

Illustrative examples:

EP1365382 (shorter addressing and scanning pulses for addressing the upper scanning lines saves time available for the sustain phase)

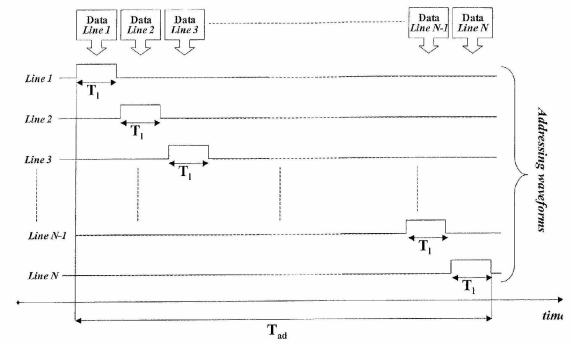

Figure 3

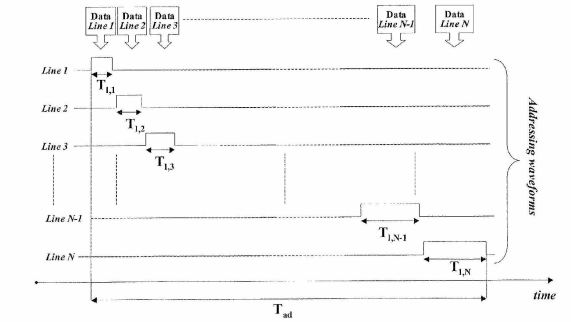

Figure 4

G09G 3/296

Driving circuits for producing the waveforms applied to the driving electrodes

Definition statement

This place covers:

Details of a drive circuit for applying pulses to the electrodes of displays using luminous gas-discharge cells as display elements arranged in a matrix in an AC panel.

Special rules of classification

For displays using luminous gas-discharge cells as display elements arranged in a matrix, the Indexing Code-codes **S09G213/12** and **S09G213/14** are not given. Instead, details of drive circuits for applying pulses to the electrodes during a certain phase are indicated by giving an additional Indexing Code-code within **S09G3/288C** to indicate the phase. For instance, details of drive circuits for applying pulses to the scan electrodes or the address electrodes during the addressing phase are indicated by an additional Indexing Code-code within **S09G3/288C4**. But details of drive circuits for applying pulses during the sustain phase to the scan electrodes or sustain electrodes are not indicated by an additional code within **S09G3/288C6**, as most of the documents deal with the sustain phase, in particular in **G09G3/288D2**.

G09G 3/2965

{using inductors for energy recovery}

Definition statement

This place covers:

Details of a drive circuit for applying pulses to the electrodes of displays using luminous gas-discharge cells as display elements arranged in a matrix in an AC panel, which uses inductors in a circuit for recovering the energy from the electrodes of the display.

Special rules of classification

For displays using luminous gas-discharge cells as display elements arranged in a matrix, the Indexing Code-codes **S09G213/12** and **S09G213/14** are not given. Instead, details of drive circuits for applying pulses to the electrodes during a certain phase are indicated by giving an additional Indexing Code-code within **S09G3/288C** to indicate the phase. For instance, details of drive circuits for applying pulses to the scan electrodes or the address electrodes during the addressing phase are indicated by an additional Indexing Code-code within **S09G3/288C4**. But details of drive circuits for applying pulses during the sustain phase to the scan electrodes or sustain electrodes are not indicated by an additional code within **S09G3/288C6**, as most of the documents deal with the sustain phase, in particular in **G09G3/288D2**.

Illustrative examples:

US4866349 (sustain electrode drive circuit with energy recovery circuit using an inductor)

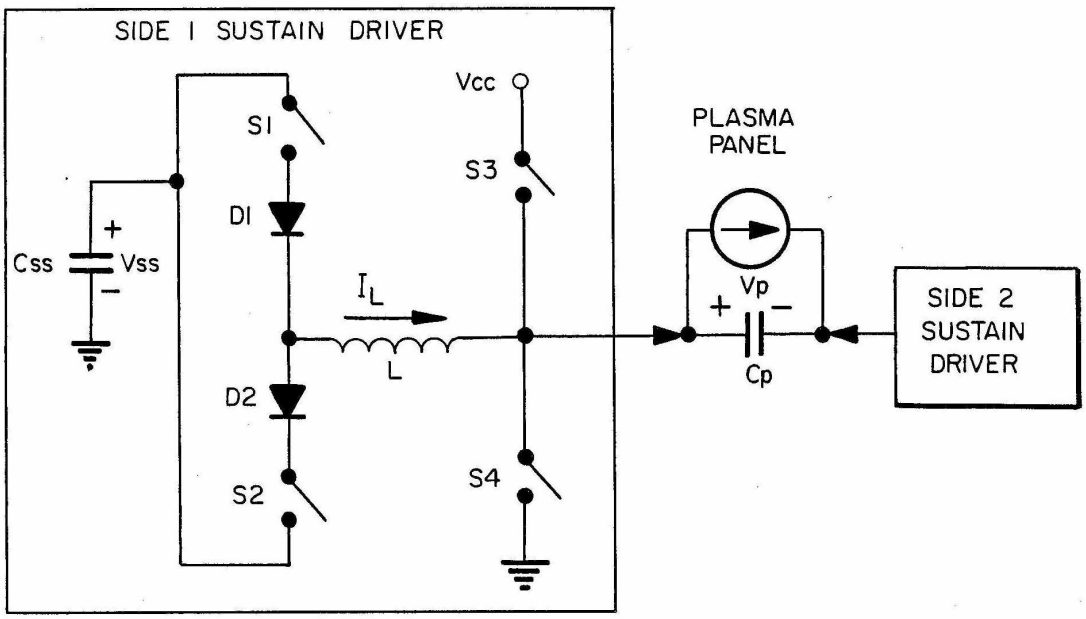

G09G 3/297

using opposed discharge type panels

Definition statement

This place covers:

Control of displays using luminous gas-discharge cells as display elements arranged in a matrix in an AC panel, wherein in a discharge cell the electrodes that play a role during the sustain discharge are opposite to each other.

Illustrative examples:

US2007/0171174 (control of AC plasma display panel with address electrodes on a substrate as well as scan and sustain electrodes in the cell walls and opposite to each other)

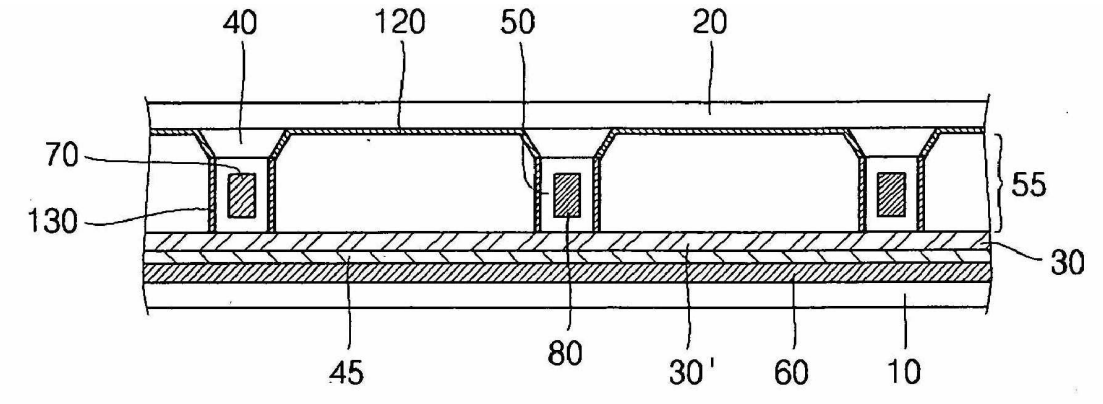

G09G 3/298

using surface discharge panels

Definition statement

This place covers:

Control of displays using luminous gas-discharge cells as display elements arranged in a matrix in an AC panel, wherein in a discharge cell the electrodes that play a role during the sustain discharge are on the same surface.

Special rules of classification

For documents published after 1997 this code is only to be given if no other class under G09G 3/288 is given for a surface discharge panel, as most of the documents after 1997 concern surface discharge panels anyway.

G09G 3/2983

{using non-standard pixel electrode arrangements}

Definition statement

This place covers:

Control of displays using luminous gas-discharge cells as display elements arranged in a matrix in an AC panel, wherein in a discharge cell the electrodes that play a role during the sustain discharge are on the same surface, and the discharge cell electrodes have a non-standard arrangement.

G09G 3/2986

{with more than 3 electrodes involved in the operation}

Definition statement

This place covers:

Control of displays using luminous gas-discharge cells as display elements arranged in a matrix in an AC panel, wherein in a discharge cell the electrodes that play a role during the sustain discharge are on the same surface, and with more than three electrodes involved in the operation of the discharge cell.

Special rules of classification

Also if a neighbouring electrode is involved in the operation of the discharge cell beside the three electrodes corresponding to the discharge cell, such a document is to be classified in this group.

Illustrative examples:

US2005/0116899 (operation of the discharge cell by signals applied to four electrodes, A, M, X, Y)

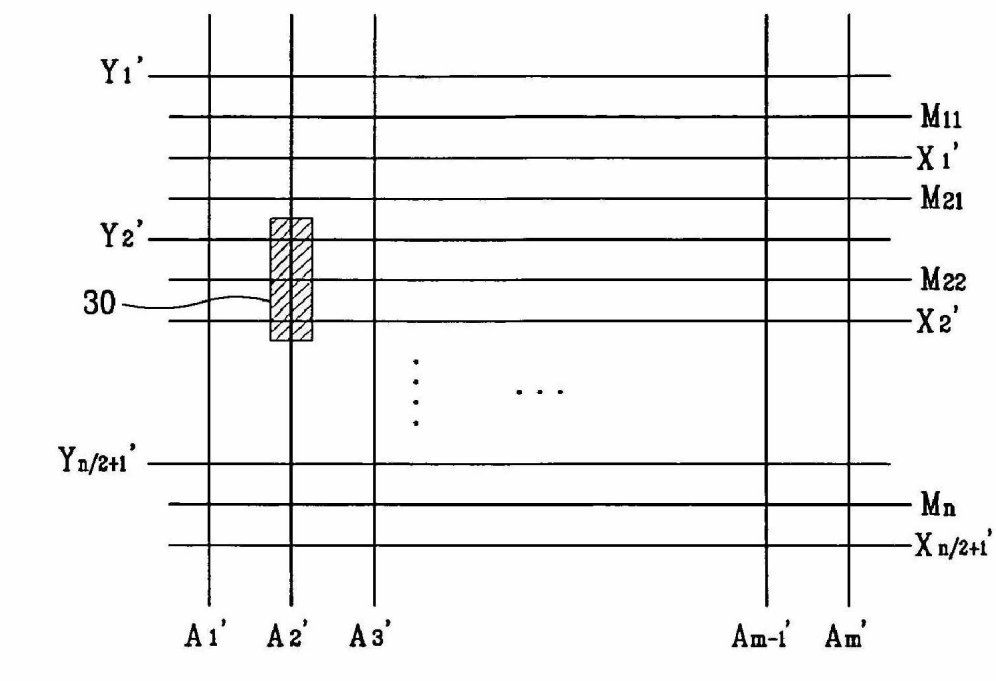

G09G 3/299

using alternate lighting of surface-type panels

Definition statement

This place covers:

Control of displays using luminous gas-discharge cells as display elements arranged in a matrix in an AC panel, wherein in a discharge cell the electrodes that play a role during the sustain discharge are on the same surface, and with alternate lighting of the cells of one row and in even columns, and an adjacent other row and in odd columns.

Illustrative examples:

EP1199701 (using all the discharge gaps between the scan and sustain electrodes enables a reduction of the number of electrodes and thus a cost reduction, but requires alternate lighting of the odd and even lines)

FIG. 7

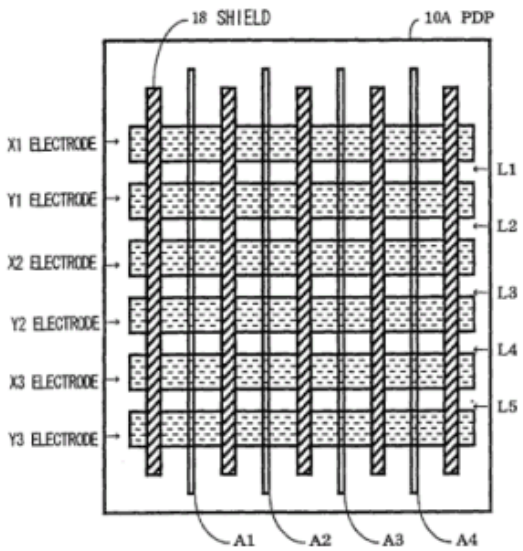

FIG. 8

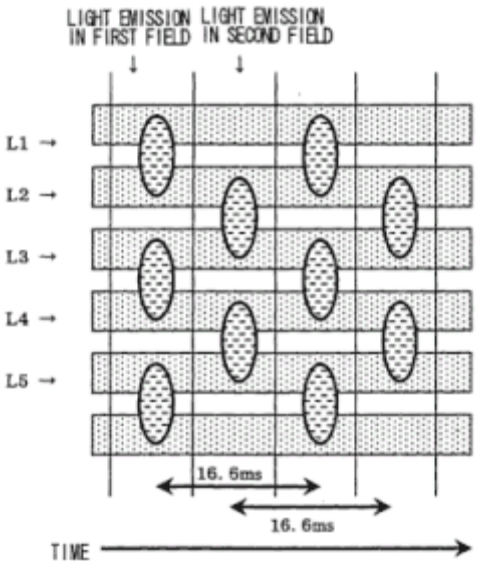

G09G 3/30

using electroluminescent panels

Definition statement

This place covers:

Control of displays using electroluminescent display elements arranged in a matrix.

References

Informative references

Attention is drawn to the following places, which may be of interest for search:

Control of displays using electroluminescent display elements for displaying a character composed by a fixed number of display elements as segments or dots	G09G 3/12

Examples:

US5973456 (application of AC signal generates light in electroluminescent display elements)

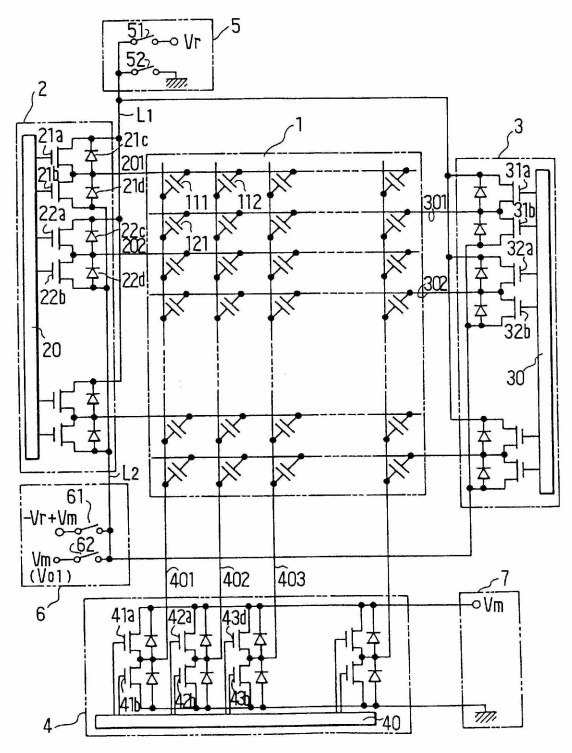

G09G 3/32

semiconductive, e.g. using light-emitting diodes [LED]

Definition statement

This place covers:

- Control of displays using electroluminescent display elements, which are semiconductor devices, e.g. diodes or transistors, arranged in a matrix without details of the semiconductive material.
- Control of displays using electroluminescent display elements, which are semiconductor devices, e.g. diodes or transistors, arranged in a matrix with an inorganic semiconductive material.

References

Informative references

Attention is drawn to the following places, which may be of interest for search:

Control of displays using electroluminescent display elements, which are semiconductor devices, e.g. diodes or transistors, for displaying a character composed by a fixed number of display elements as segments or dots	G09G 3/14

Examples:

US5134387 (matrix of LEDs)

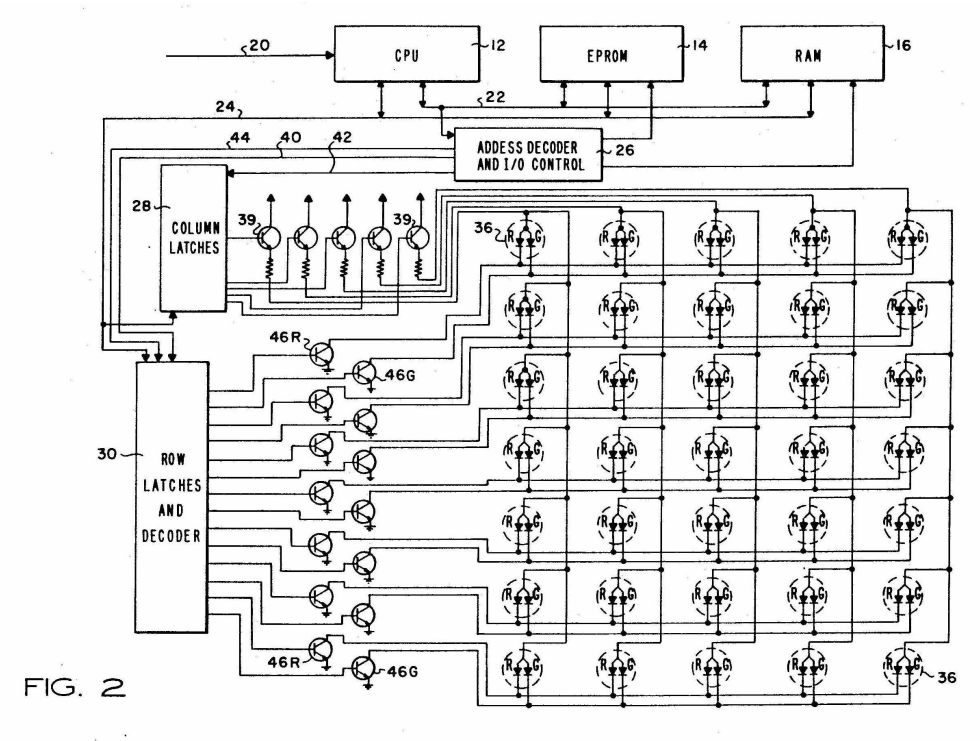

FIG. 2

G09G 3/3208

organic, e.g. using organic light-emitting diodes [OLED]

Definition statement

This place covers:

Control of displays using organic electroluminescent display elements, which are semiconductor devices, e.g. diodes or transistors, arranged in a matrix in general.

References

Limiting references

This place does not cover:

Details of the drive circuits for applying the scan signals to the scan electrodes of an organic electroluminescent matrix display	G09G 3/3266
Details of the drive circuits for applying the data signals to the data electrodes of an organic electroluminescent matrix display	G09G 3/3275

Informative references

Attention is drawn to the following places, which may be of interest for search:

Control of displays using electroluminescent display elements, which are semiconductor devices, e.g. diodes or transistors, for displaying a character composed by a fixed number of display elements as segments or dots	G09G 3/14

Special rules of classification

This code is to be given only if no details of the control of the display elements are specified, otherwise the codes of G09G 3/3216 for a passive matrix, or within G09G 3/3225 for an active matrix apply.

G09G 3/3216

using a passive matrix

Definition statement

This place covers:

Control of displays using organic electroluminescent display elements arranged in a matrix, wherein each display elements is located at the intersection of a scan and a data electrode, and directly controlled by the scan and data signal applied to the scan and data electrode, respectively, i.e. without an active element such as a diode, or a transistor at the intersection being involved.

References

Limiting references

This place does not cover:

Details of the drive circuits for applying the scan signals to the scan electrodes of an organic electroluminescent matrix display	G09G 3/3266
Details of the drive circuits for applying the data signals to the data electrodes of an organic electroluminescent matrix display	G09G 3/3275

Examples:

US5844368 (selective application of a current to the anodes of organic electroluminescent display elements as data signals via data electrodes while a ground voltage is applied to the cathodes of the organic electroluminescent display elements as scan signals via scan electrodes)

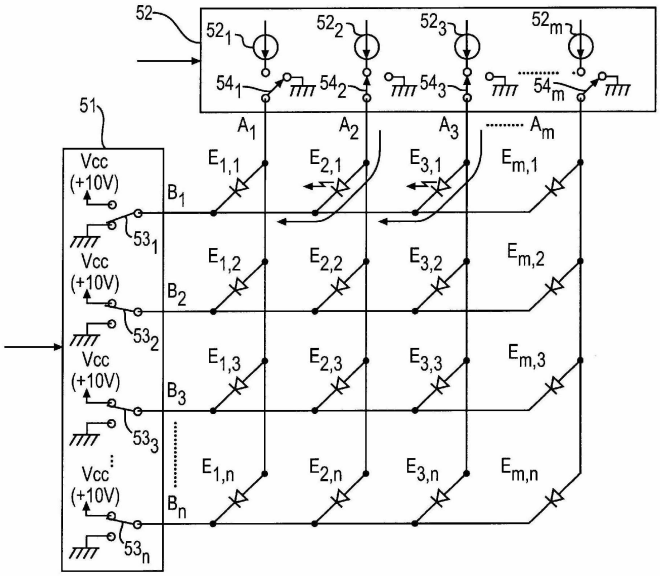

G09G 3/3225

using an active matrix

Definition statement

This place covers:

Control of displays using organic electroluminescent display elements arranged in a matrix, wherein each display elements is located together with an active element such as a transistor at the intersection of a scan electrode and a data electrode, and the active element enables the application of a signal to the display element corresponding to a data signal applied to the data electrode when the active element is activated by a scan signal applied to the scan electrode.

References

Limiting references

This place does not cover:

Details of the drive circuits for applying the scan signals to the scan electrodes of an organic electroluminescent matrix display	G09G 3/3266
Details of the drive circuits for applying the data signals to the data electrodes of an organic electroluminescent matrix display	G09G 3/3275

Special rules of classification

This code is to be given only if the control of the organic electroluminescent display element is unclear, otherwise the codes within G09G 3/3225, for instance G09G 3/3258 for a voltage control or G09G 3/3233 for a current control, apply.

G09G 3/3233

with pixel circuitry controlling the current through the light-emitting element

Definition statement

This place covers:

Control of displays using organic electroluminescent display elements arranged in a matrix together with active elements, wherein each active element enables a driving current flowing through a display element corresponding to a data signal applied to a data electrode, which is applied when the active element is activated by a scan signal applied to a scan electrode.

References

Limiting references

This place does not cover:

Details of the drive circuits for applying the scan signals to the scan electrodes of an organic electroluminescent matrix display	G09G 3/3266
Details of the drive circuits for applying the data signals to the data electrodes of an organic electroluminescent matrix display	G09G 3/3275

Examples:

US6356029 (data voltage signal applied to the data line controls the driving current flowing through the organic electroluminescent display element)

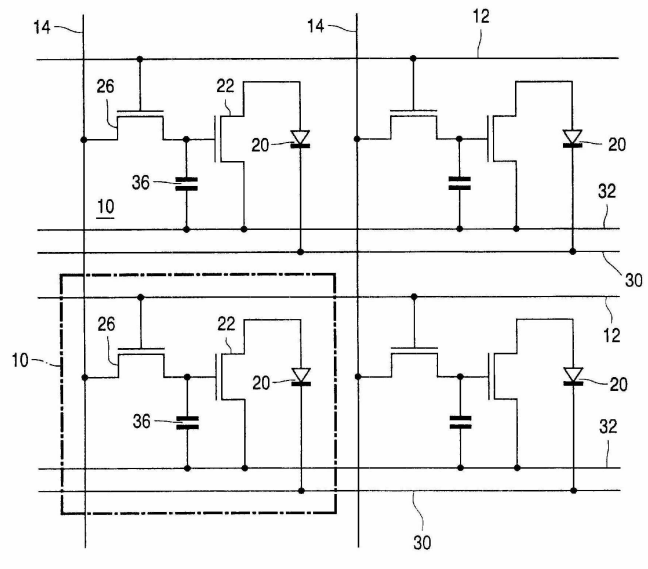

G09G 3/3241

the current through the light-emitting element being set using a data current provided by the data driver, e.g. by using a two-transistor current mirror

Definition statement

This place covers:

Control of displays using organic electroluminescent display elements arranged in a matrix together with active elements, wherein each active element enables a driving current flowing through a display element corresponding to a data current applied to a data electrode, which is applied when the active element is activated by a scan signal applied to a scan electrode, e.g. by a current mirror having the data current flowing through the data electrode as an input current, and the driving current flowing through the display element as an output current.

Illustrative examples:

US2004/0119666 (data current signal applied to the data line and flowing through the input part of a current mirror circuit controls the driving current flowing through the output part of the current mirror circuit and the organic electroluminescent display element)

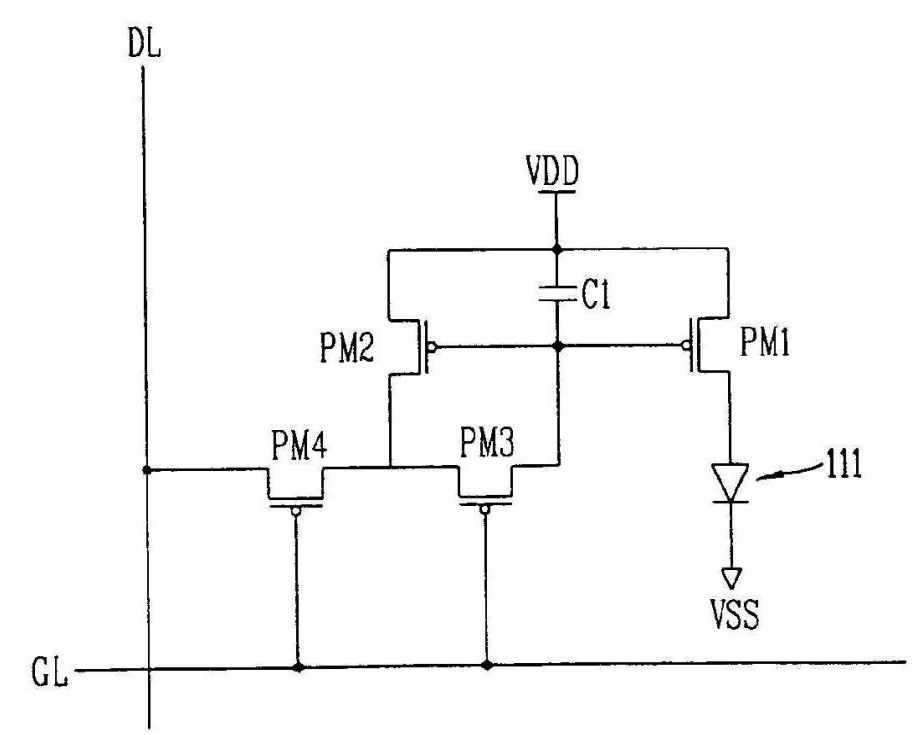

G09G 3/325

the data current flowing through the driving transistor during a setting phase, e.g. by using a switch for connecting the driving transistor to the data driver

Definition statement

This place covers:

Control of displays using organic electroluminescent display elements arranged in a matrix together with active elements, wherein each active element enables a driving current flowing through a display element corresponding to a data current flowing through a data electrode and through a driving transistor, but not through the display element connected in series with the driving transistor, during a first period when the active element is activated by a scan signal applied to a scan electrode, and with the driving current flowing through the driving transistor and the display element during a second period when the scan signal is not applied to the scan electrode, e.g. by a first switch connecting the driving transistor to the data electrode during the first period, and a second switch connecting the driving transistor to the display element during the second period.

Illustrative examples:

US2003/0142046 (data current signal applied to the data line and flowing only through the driving transistor during the scan period, and flowing through the driving transistor and the organic electroluminescent display element after the scan period)

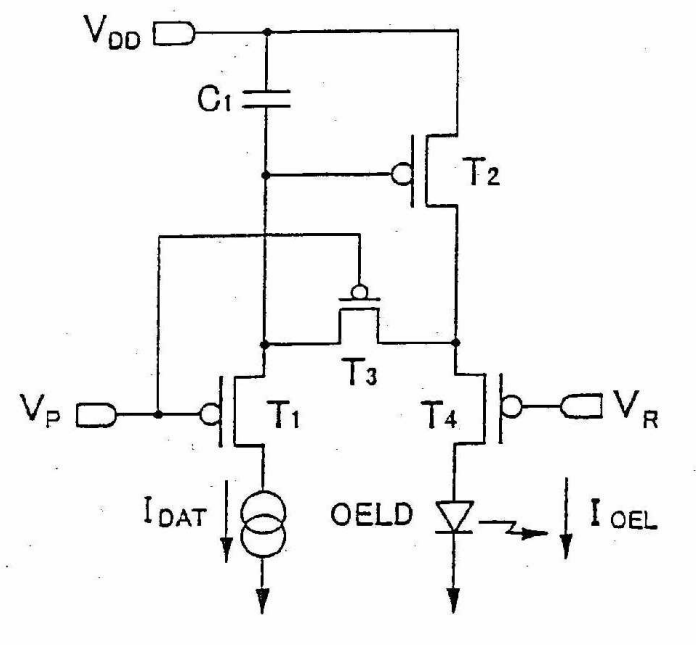

G09G 3/3258

with pixel circuitry controlling the voltage across the light-emitting element

Definition statement

This place covers:

Control of displays using organic electroluminescent display elements arranged in a matrix together with active elements, wherein each active element enables the application of a voltage across a display element corresponding to a data signal applied to a data electrode, which is applied when the active element is activated by a scan signal applied to a scan electrode.

Illustrative examples:

US2002/0089291 (application of the data voltage applied to the data line across the organic electroluminescent display element)

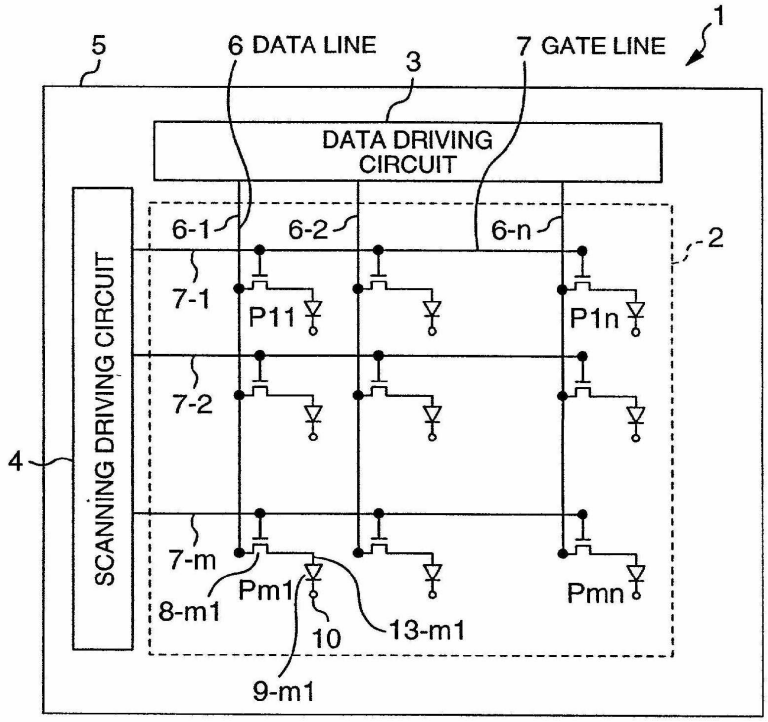

G09G 3/3266

Details of drivers for scan electrodes

Definition statement

This place covers:

Details of a drive circuit for applying scan signals to scan electrodes of an organic electroluminescent matrix display.

G09G 3/3275

Details of drivers for data electrodes

Definition statement

This place covers:

Details of a drive circuit for applying data signals to data electrodes of an organic electroluminescent matrix display.

Special rules of classification

This code is to be given if it is not specified, what kind of data signal is applied to the data electrodes, otherwise the codes G09G 3/3291 for a data voltage signal or G09G 3/3283 for a data current control signal apply.

G09G 3/3283

in which the data driver supplies a variable data current for setting the current through, or the voltage across, the light-emitting elements

Definition statement

This place covers:

Details of a drive circuit for applying data signals with a current value according to the data to be displayed to data electrodes of an organic electroluminescent matrix display.

G09G 3/3291

in which the data driver supplies a variable data voltage for setting the current through, or the voltage across, the light-emitting elements

Definition statement

This place covers:

Details of a drive circuit for applying data signals with a voltage value according to the data to be displayed to data electrodes of an organic electroluminescent matrix display.

G09G 3/34

by control of light from an independent source

Definition statement

This place covers:

- Passive displays reflecting or modulating the incident light.
- Displays comprising a passive and an active panel.

References

Informative references

Attention is drawn to the following places, which may be of interest for search:

Indicating arrangements for variable information in which the information is built-up on a support by selection or combination of individual elements	G09F 9/30
Characterised by the form or geometrical disposition of the individual elements, i.e. of the multi- segment-display	G09F 9/302
Being the ends of optical fibres	G09F 9/305
Being LCDs	G09F 9/35
Being movable elements	G09F 9/37

Examples:

US4170772

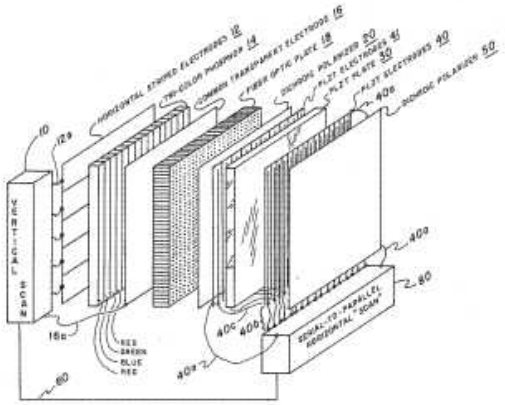

US4170771

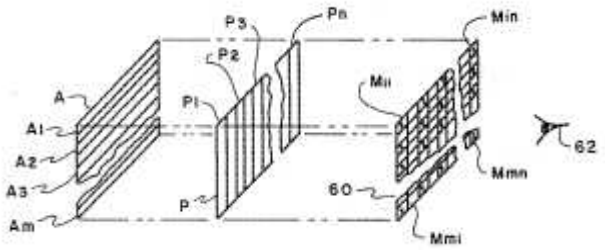

G09G 3/3406

{Control of illumination source (illumination devices structurally associated with liquid crystal cells G02F 1/1336)}

Definition statement

This place covers:

- Control of the independent light source illumination the matrix display (front and backlight).
- Standard field sequential colour displays without specific details.
- One or more separately controlled illumination source, without correspondence to different display areas.

References

Limiting references

This place does not cover:

Control arrangements or circuits, of interest only in connection with visual indicators other than cathode-ray tubes, for presentation of a single character by selection from a plurality of characters, or by composing the character by combination of individual elements, e.g. segments, by control of light from an independent source.	G09G 3/16, G09G 3/18

Informative references

Attention is drawn to the following places, which may be of interest for search:

Light sources using semiconductor devices as light-generating elements, e.g. using light-emitting diodes [LED] or lasers	F21K 9/00

Light guides specially adapted for lighting devices or systems.	G02B 6/0001
Constructional details of illuminating devices.	**G02F1/13357**
Inverters for backlight units: conversion of DC power input into DC power output.	H02M 3/00
Inverters for backlight units: conversion of AC power input into DC power output.	H02M 7/00
Constructional details of illumination within telephone sets.	H04M 1/22
Projection devices for colour picture display in colour television systems using light modulating optical valves.	H04N 9/31
Control of light sources in general (i.e., not specifically related to a display device).	H05B 33/08, H05B 37/00, H05B 43/00

Special rules of classification

Further detail is covered by the Indexing Code symbols listed below. Classification is obligatory.

Field sequential colour displays: G09G 2310/0235

Scrolling of the light from the illumination source while scanning the screen: G09G 2310/024

Adjustment of display parameters: G09G 2320/06

The adjustment depending on the type of the information to be displayed: G09G 2320/0613

Adjustment of illumination source parameters: G09G 2320/062

For control of overall brightness: G09G 2320/0626

By amplitude modulation of the brightness of the illumination source: G09G 2320/0633

By time modulation of the brightness of the illumination source: G09G 2320/064

Modulation of brightness of the illumination source and modulation of image signal correlated to each other: G09G 2320/0646

Detecting light within display devices, e.g. using a single or a plurality of photosensors: G09G 2360/14

The light being ambient light: G09G 2360/144

The light originating from the display screen: G09G 2360/145

Calculation or use of calculated indices related to luminance levels in display data: G09G 2360/16

Illustrative examples:

EP0319293 (Standard field sequential display without specific details)

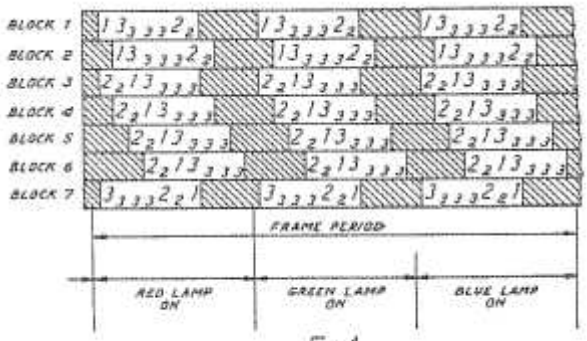

FIG.1

US4907862

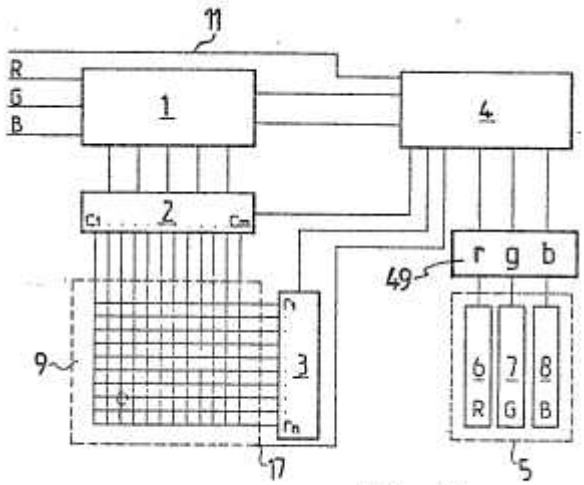

Fig.2a

US2001008394 (Two illumination sources without corresponding display areas)

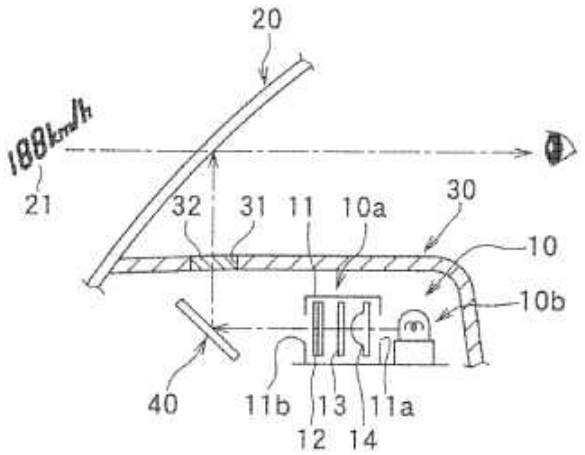

G09G 3/3413

{Details of control of colour illumination sources}

Definition statement

This place covers:

- Control of backlight arrangements with more than one colour.
- Specific details of control of sequential colour displays.

Special rules of classification

Further detail is covered by the Indexing Code symbols listed below. Classification is obligatory.

To indicate details of the colour setup of elements in an array of light emitting elements forming the illumination source: G09G 2300/0452

Example:

US2004246275 (Filed sequential display with specific details)

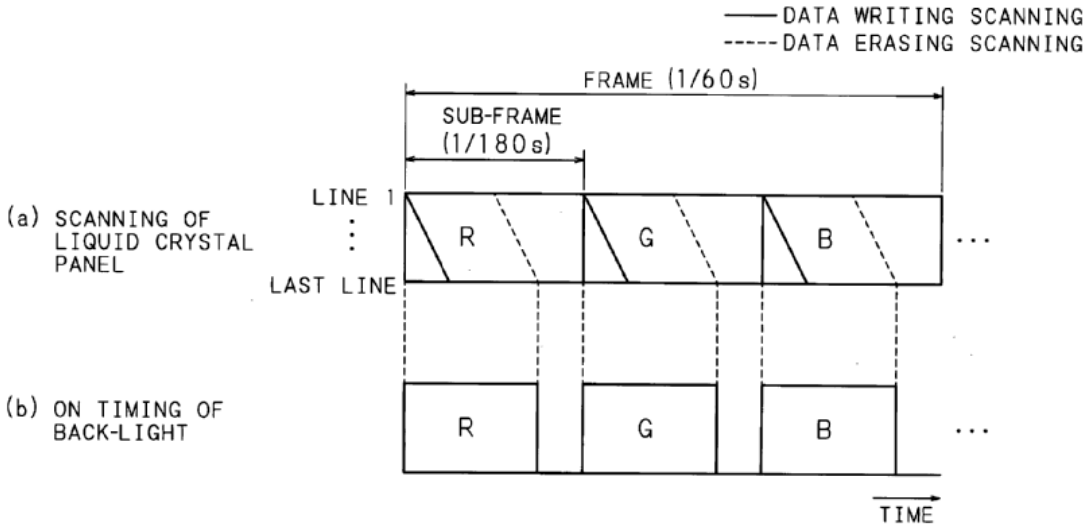

US6608614 (Automatic adjustment of colour parameters)

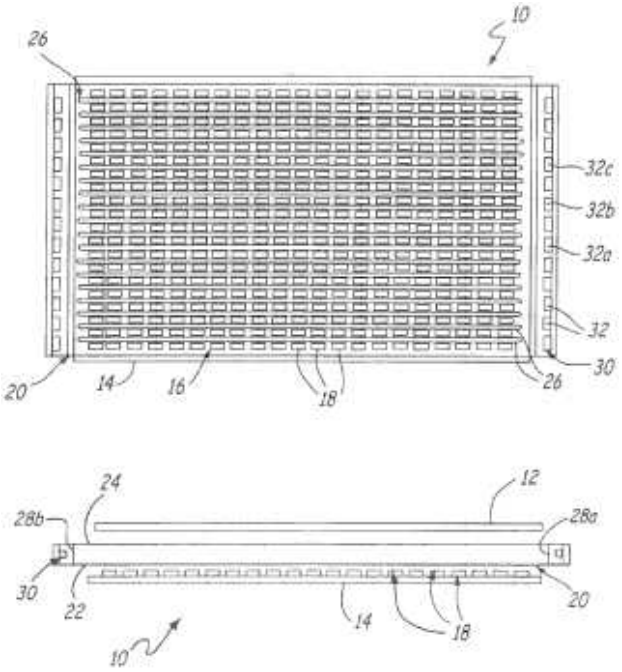

G09G 3/342

{using several illumination sources separately controlled corresponding to different display panel areas, e.g. along one dimension such as lines}

Definition statement

This place covers:

Documents disclosing horizontal stripes or rows of pixel, each lit by a separate illumination source, each illumination source being independently controlled from the other illumination sources.

Illustrative examples:

US2002000960 (Backlight with scanning of illumination source)

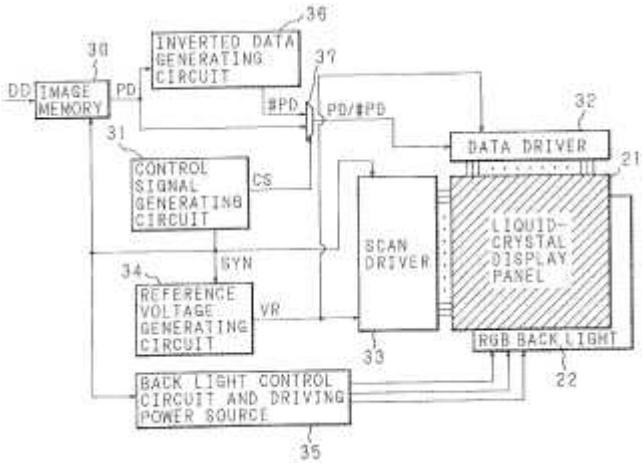

WO2005093703 (Backlight without scanning of illumination source)

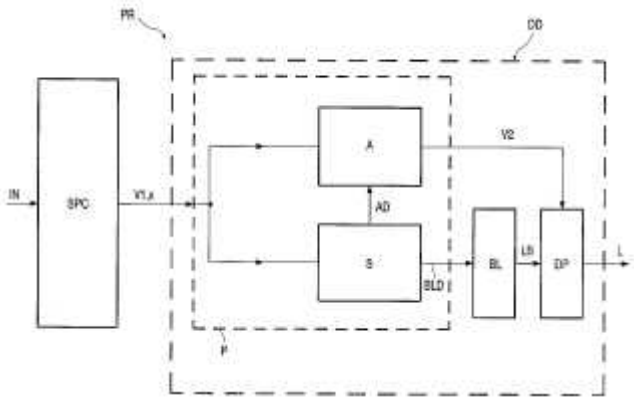

US6563271 (Backlight having separate light sources for different panel regions)

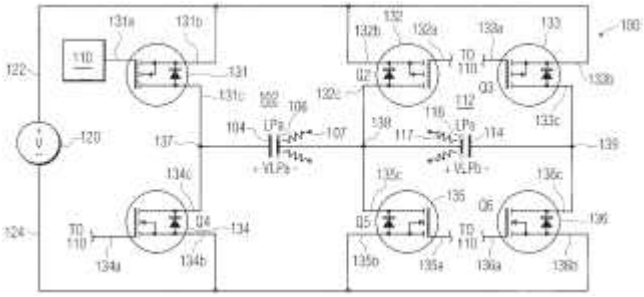

G09G 3/3426

{the different display panel areas being distributed in two dimensions, e.g. matrix}

Definition statement

This place covers:

Documents disclosing a backlight unit usually comprising a matrix of pixel blocks or single pixels which are each lit by an separate illumination source, each illumination source being independently controlled from the other illumination sources.

Illustrative examples:

EP1380876 (Backlight unit with scanning of illumination sources)

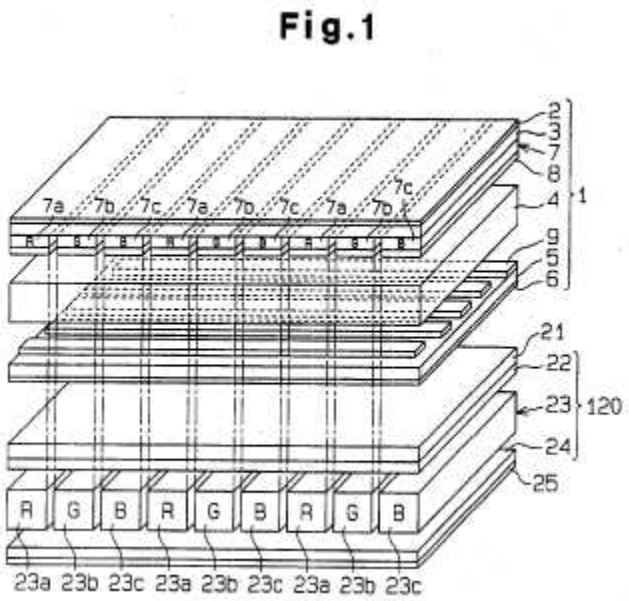

US2001028335 (Backlight unit without scanning of illumination source, with S09206/02 Indexing Code)

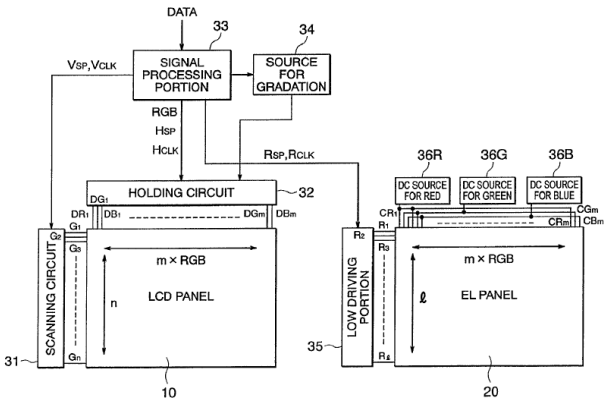

EP1496497 (Display comprising stacked panels, with S09206/02 Indexing Code)

Fig.2

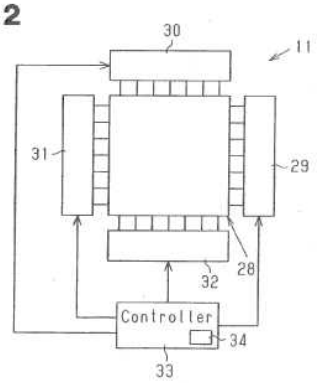

Fig.5

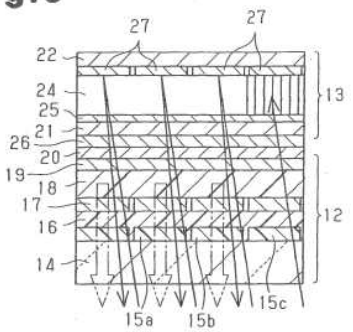

G09G 3/3433

{using light modulating elements actuated by an electric field and being other than liquid crystal devices and electrochromic devices (using liquid crystal devices G09G 3/36; using electrochromic devices G09G 3/38)}

References

Informative references

Attention is drawn to the following places, which may be of interest for search:

Control arrangements for presentation of an assembly of a number of characters, e.g. a page, by composing the assembly by combination of individual elements arranged in a matrix, by control of light from an independent source, using liquid crystals	G09G 3/36
Control arrangements for presentation of an assembly of a number of characters, e.g. a page, by composing the assembly by combination of individual elements arranged in a matrix, by control of light from an independent source, using electrochromic devices	G09G 3/38

Illustrative examples:

EP0291122 (Electroscopic display)

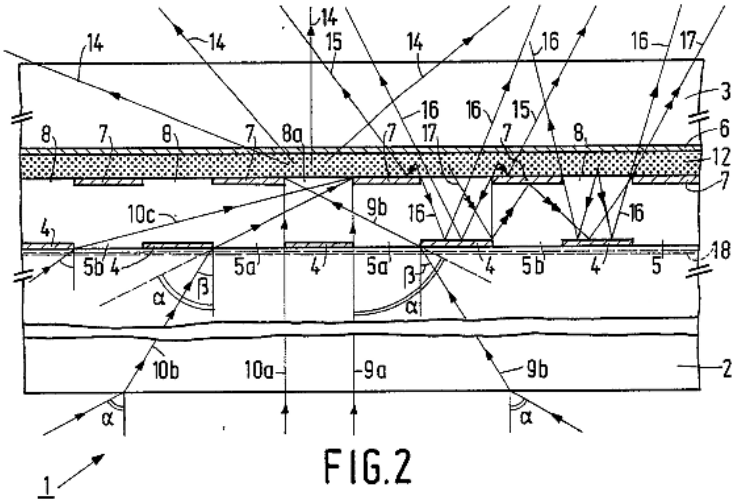

FIG.2

GB1205236 (Contrast liquid is moved to activate selected pixel cells)

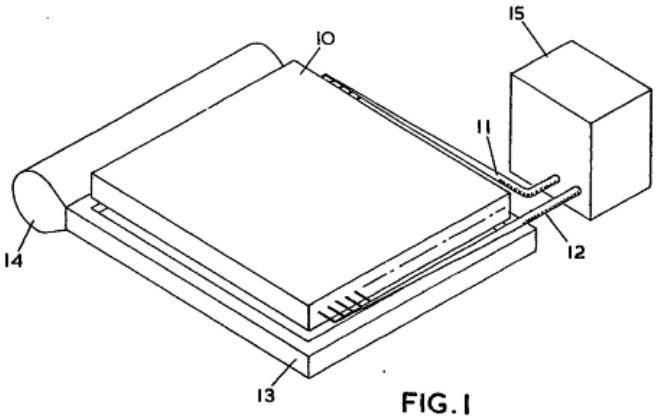

FIG.1

EP0153178 (Electrostatic display)

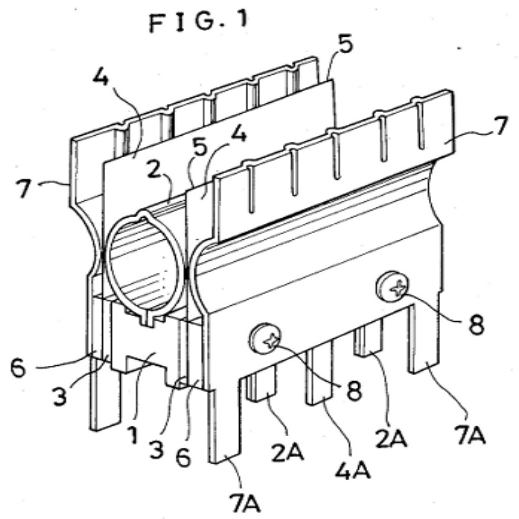

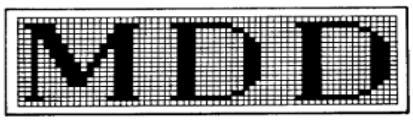

WO2006091738 (Electrostatic display)

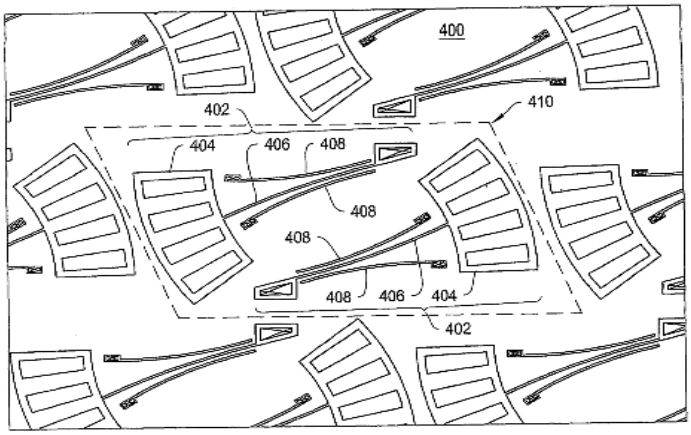

Figure 4

G09G 3/344

{based on particles moving in a fluid or in a gas, e.g. electrophoretic devices (electrophoretic devices per se G02F 1/167)}

Definition statement

This place covers:

Control of display devices wherein the visual effect is obtained by controlling the displacement of micro-particles in fluid or gas.

References

Limiting references

This place does not cover:

Electrophoretic devices per se	G02F 1/167

Example:

US4041481 (Electrophoretic display device)

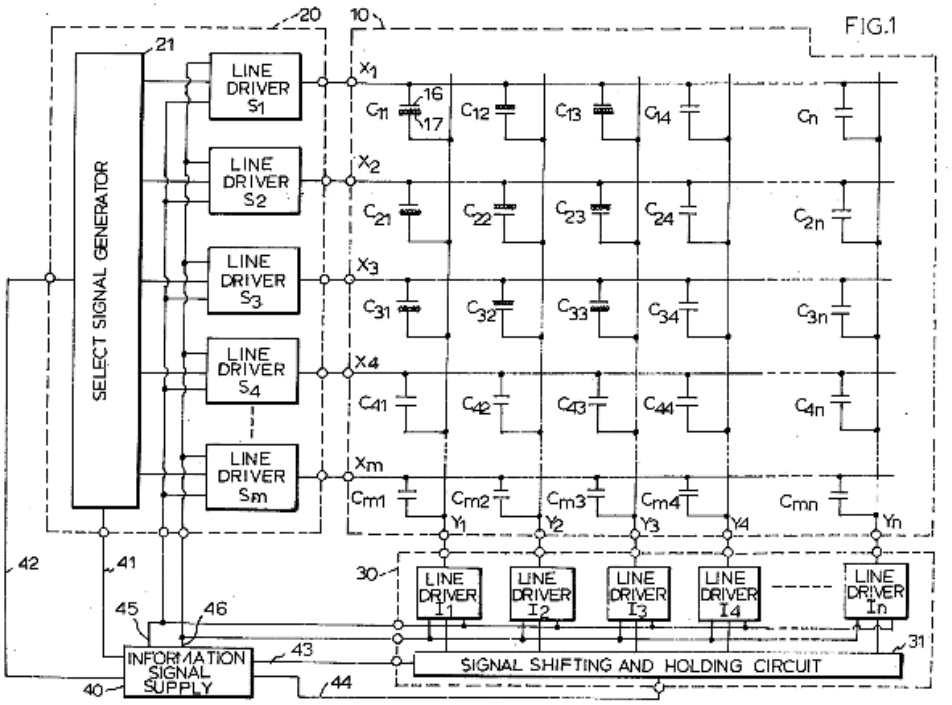

G09G 3/3446

{with more than two electrodes controlling the modulating element}

Definition statement

This place covers:

Documents in which the displacement of the micro-particles is obtained with a cell electrode structure comprising more than two electrodes.

Illustrative example:

US5223115 (Item 26: cathode, item 18: anode, item 28: grid)

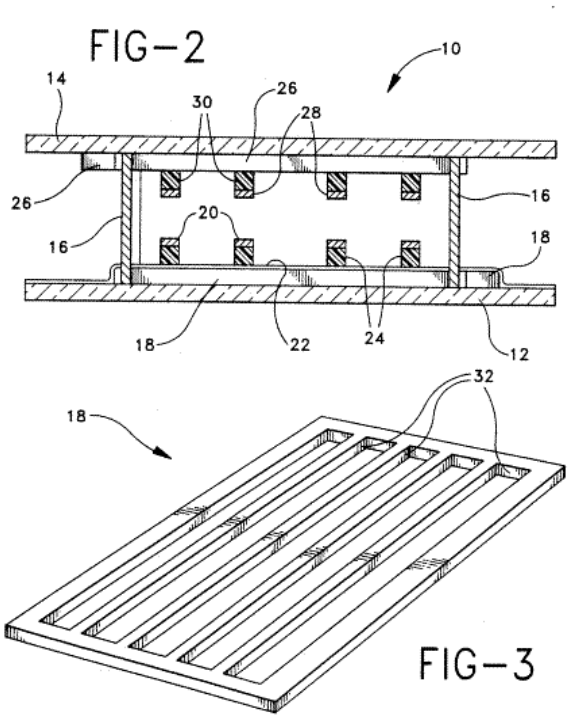

G09G 3/3453

{based on rotating particles or microelements}

Definition statement

This place covers:

Control of display devices with rotating elements ("particles") that are encapsulated and suspended in a fluid and controlled by electrostatic operation.

Also control of displays wherein each pixel contains a plurality of "particles" (e.g. "Gyricon®" from Xerox).

References

Informative references

Attention is drawn to the following places, which may be of interest for search:

Optical devices or arrangements using movable or deformable optical elements for controlling the intensity, colour, phase, polarisation or direction of light (e.g. switching, gating, modulating)	G02B 26/00
For controlling the intensity of light based on the rotation of particles under the influence of an external field.	G02B 26/026
Macro displays	G09F 9/37

Special rules of classification

Illustrative example of subject matter classified in this group:

US2006214880

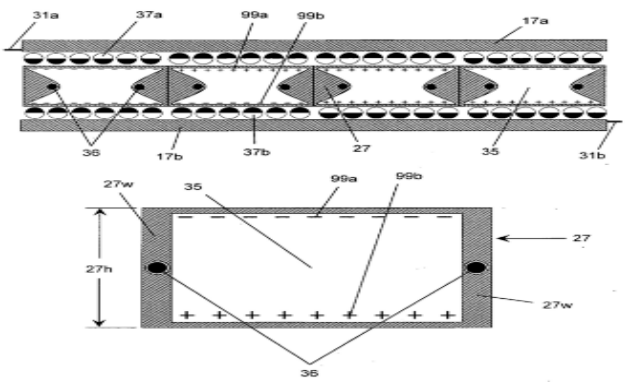

Glossary of terms

In this place, the following terms or expressions are used with the meaning indicated:

E-Paper	Electric(al) or electronic (reusable) paper

Synonyms and Keywords

In patent documents, the following words/expressions are often used as synonyms:

- "Gyricon® ", "rotating ball", "twisting ball", "rotating particle" and "twisting particle"

G09G 3/346

{based on modulation of the reflection angle, e.g. micromirrors (micromirrors devices per se G02B 26/0833)}

Definition statement

This place covers:

- Electrostatically controlled micromirrors.
- Rocking DMD.
- Bending reflective "tongues").

References

Limiting references

This place does not cover:

Micromirrors devices per se	G02B 26/0833

Informative references

Attention is drawn to the following places, which may be of interest for search:

Micro-mechanical (e.g. MEMS) devices comprising elements which are flexible, deformable or movable (e.g. slidable or rotatable) in relation to each other	B81B 3/00
Piezo-electric, electrostrictive or magnetostrictive elements per se	H01L 41/00

Special rules of classification

Illustrative examples of subject matter classified in this group:

US5214419

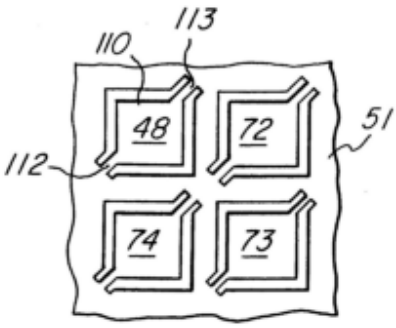

Fig. 2b

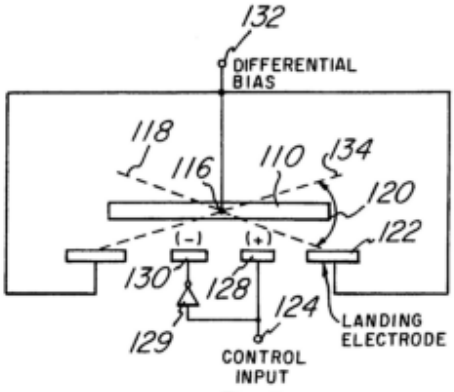

Fig. 2c

Glossary of terms

In this place, the following terms or expressions are used with the meaning indicated:

MEMS	Micro electromechanical system
NEMS	Nano electromechanical system
DMD	Deformable Mirror device - Digital mirror device
DMM	Digital micro mirrors
DLP	Digital light processing

G09G 3/3466

{based on interferometric effect}

Definition statement

This place covers:

Control of electrically switched displays composed of miniature interferometers (etalons) that are switched on and off with micro-electromechanical systems. An etalon reflects light at a specific wavelength and gives pure, bright colours while consuming no power.

References

Informative references

Attention is drawn to the following places, which may be of interest for search:

Devices or arrangements using multiple reflections in spectrometry or monochromators (Fabry-Perot interferometers)	G01J 3/26
Interference filters	G02B 5/28
Optical modulators based on interference in an adjustable optical cavity	G02B 26/001

Special rules of classification

Illustrative examples of subject matter classified in this group:

EP1473581

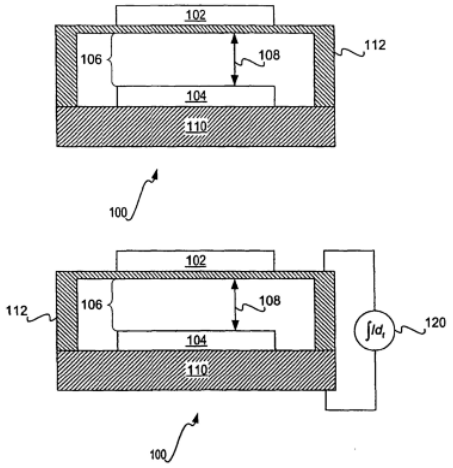

US2002054424

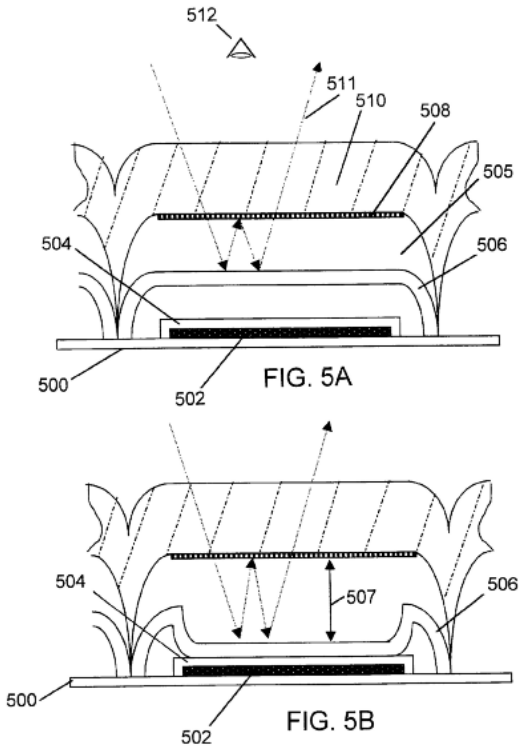

Synonyms and Keywords

Interferometric modulator [IMOD], Diffractive light device [DLD].

G09G 3/3473

{based on light coupled out of a light guide, e.g. due to scattering, by contracting the light guide with external means}

Definition statement

This place covers:

Illustrative example of subject matter classified in this group:

WO9731288

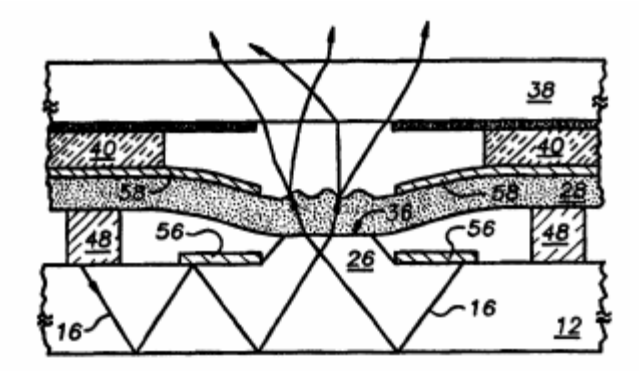

G09G 3/3486

{using light modulating elements actuated by a magnetic field}

Definition statement

This place covers:

Movable elements controlled electromagnetically (also: magnetostrictive effect used in "foil" display).

Illustrative example:

DE2133121

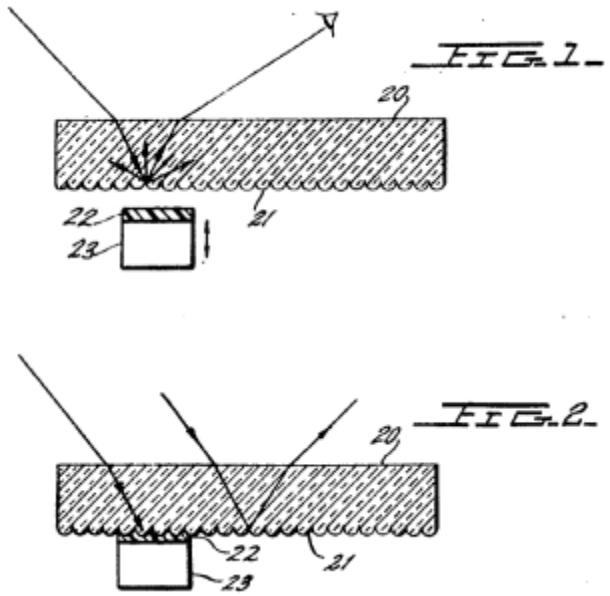

G09G 3/3493

{using light modulating elements actuated by a piezoelectric effect}

Definition statement

This place covers:

Illustrative example of subject matter classified in this group:

EP1369844 (Piezoelectric actuator in combination with scattering of light from a waveguide. In this case the document was allocated both G09G 3/3493 and G09G 3/3473 symbols)

FIG. 2

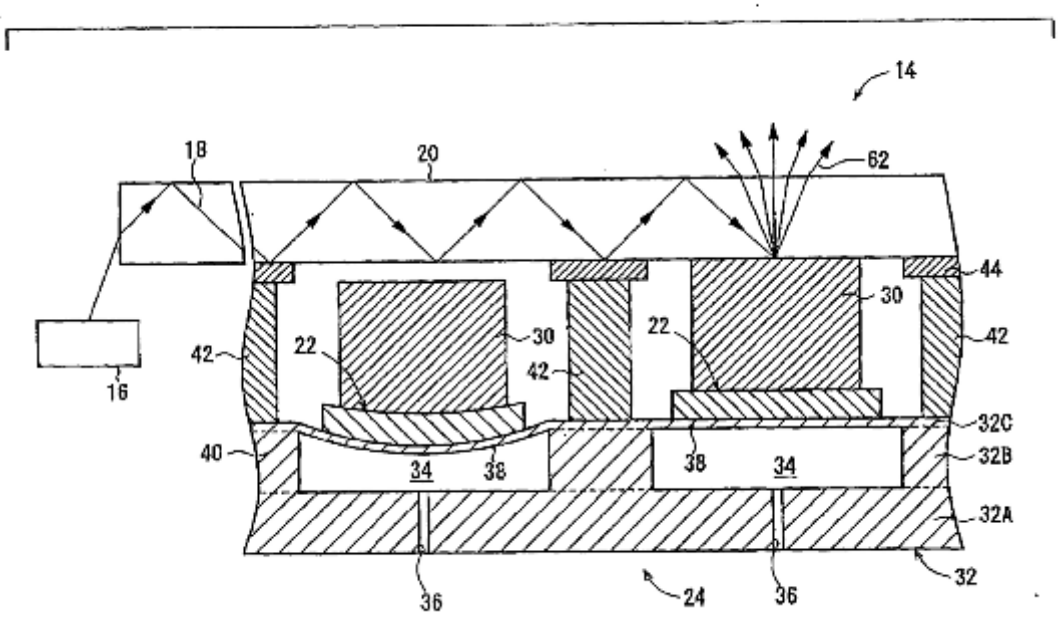

G09G 3/36

using liquid crystals

Definition statement

This place covers:

Control of discrete pixel electrodes on one substrate without row and column selection.

Control of a plurality of display modules combined to result in a bigger matrix.

Address matrix for selecting a row or column.

Specific circuits for crosstalk compensation (e.g. with extra electrode carrying an additional signal).

Circuit for temperature compensation in LC displays.

Control of stacked LC panels.

References

Informative references

Attention is drawn to the following places, which may be of interest for search:

Chemical composition of LCD	C09K 19/00
Constructional arrangements; Operation of LCD; (arrangements or circuits for control of liquid crystal elements in a segment display or a matrix)	G02F 1/13

G09G 3/3603

{with thermally addressed liquid crystals}

References

Informative references

Attention is drawn to the following places, which may be of interest for search:

Multi colour thermography	B41M 5/34
Liquid crystal cells exhibiting a thermo-optical effect	G02F 1/132

G09G 3/3607

{for displaying colours or for displaying grey scales with a specific pixel layout, e.g. using sub-pixels (display of colours in flat matrix panels other than liquid crystal displays G09G 3/2003; grey scales specific for television H04N 3/127)}

Definition statement

This place covers:

Control of subpixels in liquid crystal displays.

References

Limiting references

This place does not cover:

Display of colours in flat matrix panels other than liquid crystal displays.	G09G 3/2003
Gray scales specific for television systems	H04N 3/127

G09G 3/3611

{Control of matrices with row and column drivers}

Definition statement

This place covers:

- Control of liquid crystal displays wherein the type of matrix (active, passive) is not defined.
- Addressing of liquid crystal matrices in general (e.g. without specifying waveforms, information transfer computer ==> memory ==> panel, driver circuits).
- Control of a liquid crystal panel by computer signals or composite signals.

- Overview articles.
- Timing circuits.
- Black on white of white on black displays.

Illustrative examples: US2005174456 (Interface from external camera or host to a LCD, wherein the display data are stored in the display driver. The display controller communicates with the display unit sending RGB-data and the LCD-clock. Because no hsync / vsync are transmitted, this interface does not form a monitor_architecture)

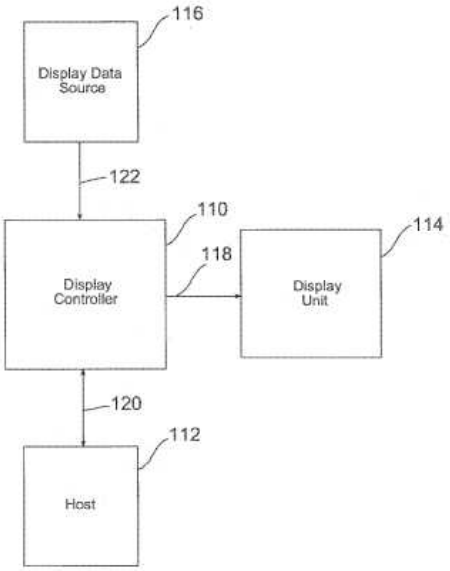

FR2808113 (Details of wiring between drivers and rows and columns)

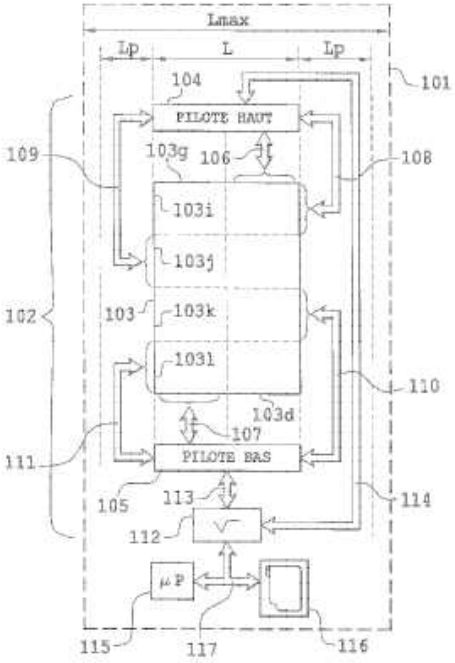

G09G 3/3614

{Control of polarity reversal in general}

Definition statement

This place covers:

- Specific control circuits for polarity inversion in LCD display devices.
- Inversion sequences (row-, column-, field-, dot-inversion).

References

Informative references

Attention is drawn to the following places, which may be of interest for search:

Control of polarity inversion for display devices other than LCD devices	**S09213/07**

G09G 3/3622

{using a passive matrix (G09G 3/3674 - G09G 3/3696 take precedence)}

Definition statement

This place covers:

Control of passive matrix devices. Passive matrix means that there are no active elements (transistor, diode, MIM, ...) in the display cell at the crosspoint of a row and column.

References

Limiting references

This place does not cover:

Detail of drivers for scan electrodes	G09G 3/3674
Detail of drivers for data electrodes	G09G 3/3685
Generation of voltages supplied to electrode drivers	G09G 3/3696

G09G 3/3625

{using active addressing}

Definition statement

This place covers:

In traditional multiplexing, the rows are addressed in sequence and only one at a time. The voltages set on the columns correspond to the pixel values in the row being addressed. This scheme leads to very low voltage selection ratios and, consequently, low contrast.

In the Active Adressing scheme, several rows are addressed simultaneously in different patterns corresponding to orthogonal functions. A set of functions is orthogonal over a certain interval if the integral of the product of any two of the functions is 0 if the functions are different, and a constant if they are the same function. From signal processing theory, we can represent a given signal as a sum of differing amounts of these orthogonal functions. If we suppose the signal we wish to represent is the sequence of pixel values in a particular column of a display, then we can create that signal by applying the correct orthogonal functions to the row lines and certain voltages on the column line that correspond to the amounts of those functions we want. If we use the same functions to represent the

signals in the other columns, then we can create a whole display by applying the correct voltages to all of the column lines in parallel.

Special rules of classification

Documents classified in G09G 3/3625 shall not receive an Indexing Code for active addressing (G09G 2310/0208).

Illustrative example:

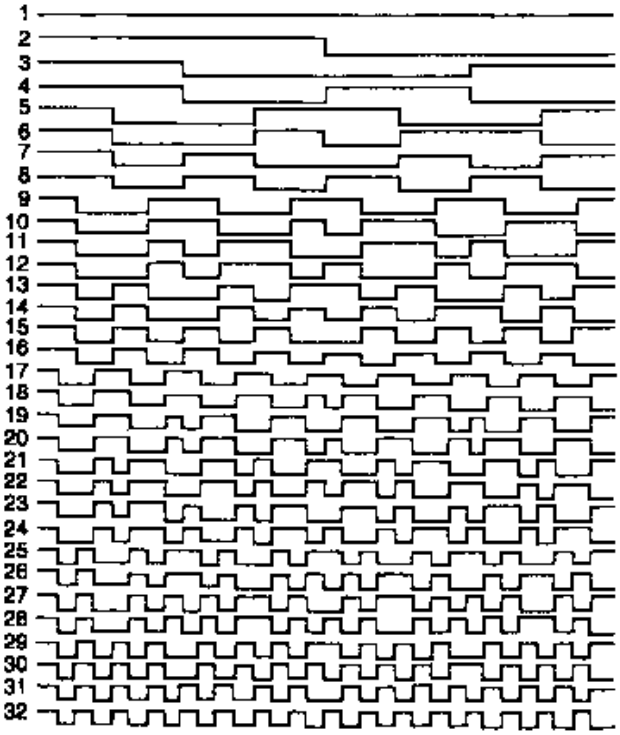

Order 32 Walsh functions. These kinds of functions serve as the voltage settings for the row lines in active addressing.

G09G 3/3629

{using liquid crystals having memory effects, e.g. ferroelectric liquid crystals}

Definition statement

This place covers:

Control of:

- ferroelectric LCDs, i.e. LCs having a polarization vector, that causes an inherent memory effect, shown in a single memory loop in the transmission/voltage characteristic has, such as chiral smectic LCs.
- Nematic LCDs (chiral nematic) where two metastable states are obtained by others means.
- LCDs using a "type" transition to obtain memory effects (nematic - cholesteric).

References

Informative references

Attention is drawn to the following places, which may be of interest for search:

Details of waveforms for flat panels	G09G 2230/00

Partial updating	G09G 2310/04
Chemical composition of ferroelectric liquid crystals	C09K 19/42
Physics and structure of LCDs	G02F

Examples:

US4793693

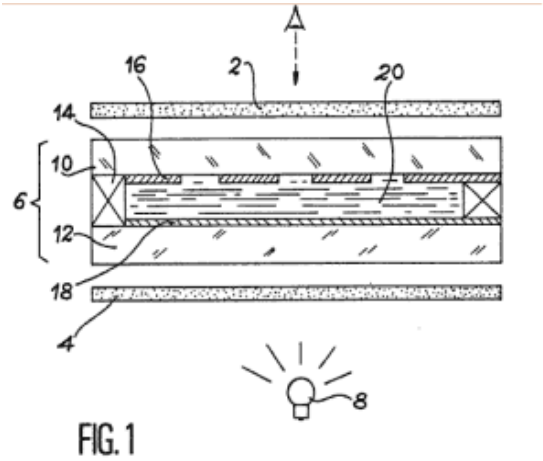

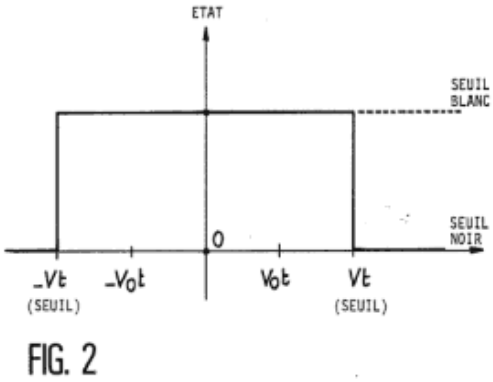

US4367924

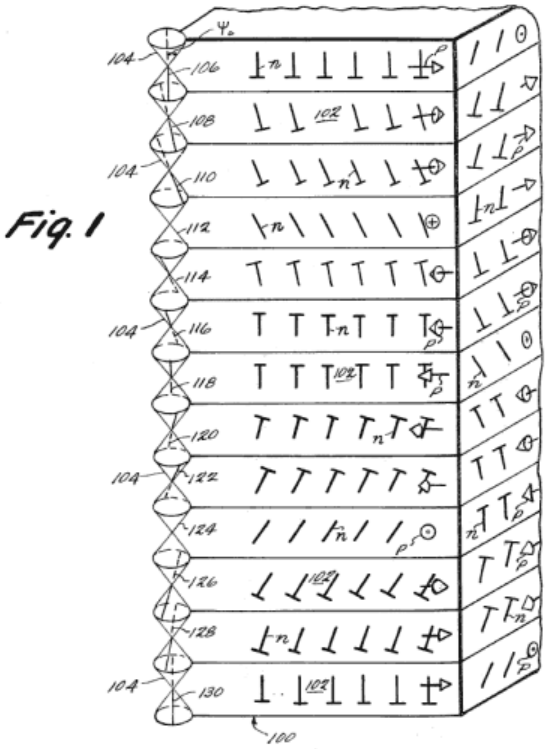

US4715688

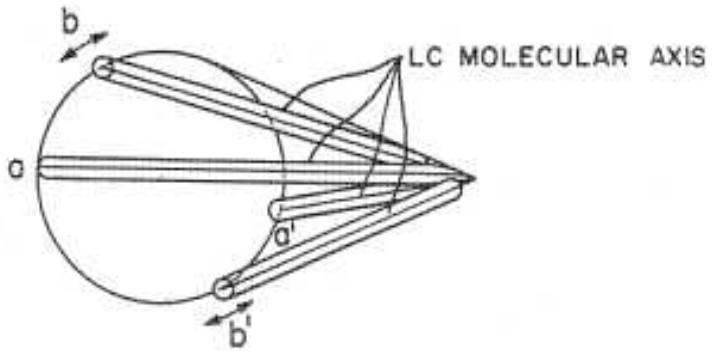

US5594464 (nematic LCD where two metastable states are obtained by disrupting molecule anchoring with an initial pulse; in this case apply also Indexing Code G09G 2300/0486).

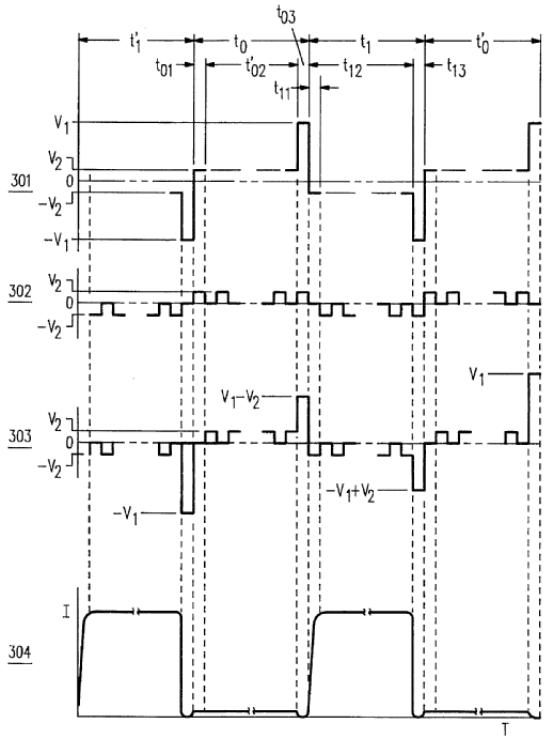

US4395709 (Guest-host solutions)

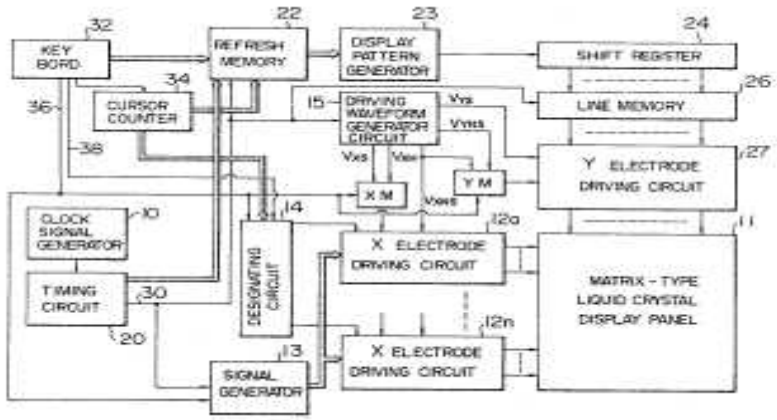

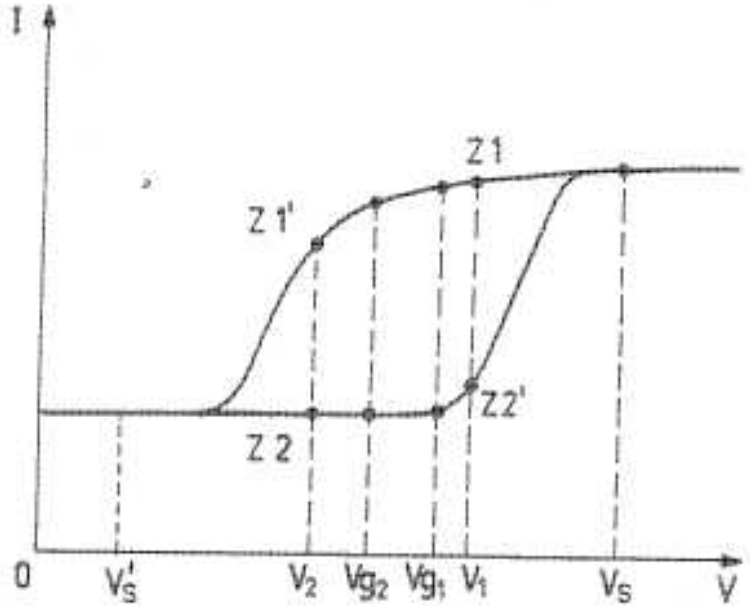

US4902105 (Dynamic scattering smectic LC of positive dielectric anisotropy)

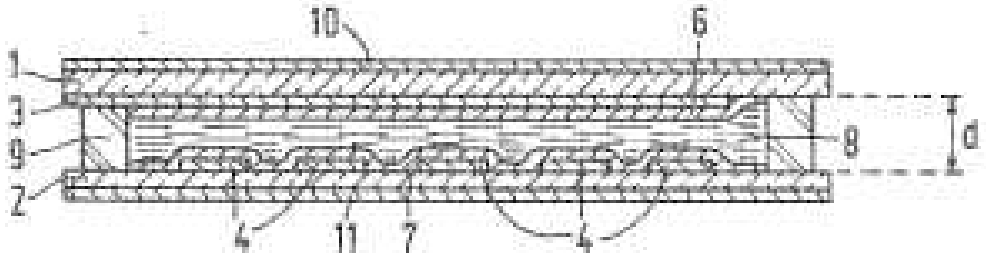

EP957394 (nematic-cholesteric LCDs with planar and focal conic states)

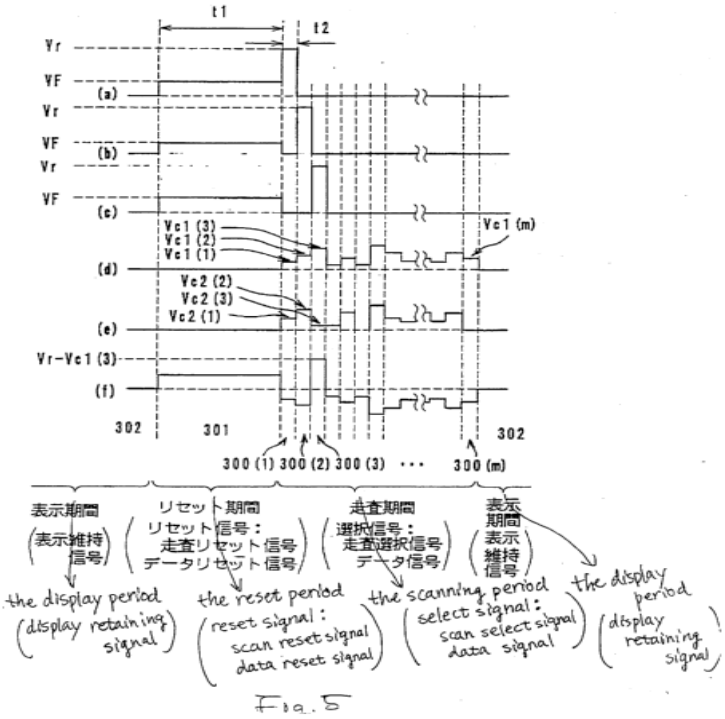

Fig. 5

G09G 3/3633

{with transmission/voltage characteristic comprising multiple loops, e.g. antiferroelectric liquid crystals}

Definition statement

This place covers:

Control of:

- Antiferroelectric LCDs having two antiferroelectric states for positive and negative pixel voltages and a ferroelectric state without pixel voltage, both with symmetric or asymmetric loops, where memory effects are desired and used.
- Short pitch ferroelectric LCDs [SBF LCDs] where the helix pitch is shorter than the pixel cell thickness.

G09G 3/3637

{with intermediate tones displayed by domain size control (domain size control in flat matrix panels other than liquid crystal displays having memory effects G09G 3/207)}

Definition statement

This place covers:

- Control of LCDs having memory effect (e.g. ferroelectric) where gradation is obtained by varying the extension of the pixel area where switching from one memory state (e.g. ferroelectric state) to the other takes place, e.g. by.
- Arranging the electrodes such to vary the applied voltage across the pixel, so that a gradient in the LC electric field is obtained.
- Varying the thickness of the LC cell across the pixel.

- Simply using unevenness in the LC cell structure.

References

Informative references

Attention is drawn to the following places, which may be of interest for search:

Domain size control in flat matrix panels other than liquid crystal displays having memory effects	G09G 3/207

Example:

US2006244698

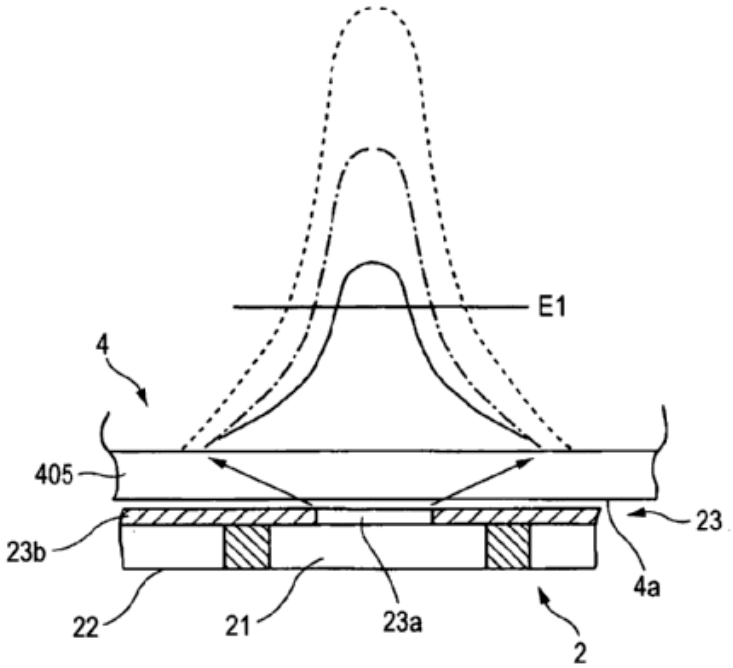

G09G 3/364

{with use of subpixels}

Definition statement

This place covers:

Using subpixels in memory effect LCDs for displaying gradations (common solution, together with subframe modulation, since the memory effect LCDs are normally binary devices) or for other purposes.

References

Informative references

Attention is drawn to the following places, which may be of interest for search:

Gradation display by the use of subpixels in general (in all sorts of matrix displays beside passive matrix LCDs)	G09G 3/2074
Layout of subpixels used for reasons other than gradation display	G09G 2300/0443

Details of colour pixel setup, e.g. pixel composed of a red, a blue and two green components	G09G 2300/0452

Special rules of classification

Documents classified in G09G 3/364 shall not receive an Indexing Code for subpixels addressing (G09G 2300/0439 and subgroups).

G09G 3/3644

{with the matrix divided into sections}

Relationships with other classification places

Video-walls, which consist out of modules, meant to be flexibly combined into a bigger size display, e.g. for installation or configuration purposes (see G06F 3/1446 and G09G 2300/026).

Matrices where the split has no impact on the driving, i.e. it is just a convenient constructional measure or it serves other purposes (heat dispersion etc.). Possible classifications for such cases are again in G06F 17/50, H01L 27/00, or in groups related to the physical structure of specific display technologies (e.g. G02F 1/13 for LCDs).

Splitting of matrices in a way that the resulting structure cannot be driven independently from each other, e.g. driving odd lines from one driver and even lines from another driver.

G09G 3/3648

{using an active matrix (G09G 3/367 - G09G 3/3696 take precedence)}

Definition statement

This place covers:

Control of image refresh frequency in LC displays, wherein the displays comprise a switching element (e.g. a transistor) in series with the liquid crystal cell at each matrix point.

References

Limiting references

This place does not cover:

Control of matrices with row and column drivers, with a nonlinear element in series with the liquid crystal cell, e.g. a diode, or M.I.M. element	G09G 3/367
Detail of drivers for scan electrodes	G09G 3/3674
Detail of drivers for data electrodes	G09G 3/3685
Generation of voltages supplied to electrode drivers	G09G 3/3696

G09G 3/3655

{Details of drivers for counter electrodes, e.g. common electrodes for pixel capacitors or supplementary storage capacitors}

Definition statement

This place covers:

- Driving circuits for common electrodes of:

- pixels;
- supplementary-capacitors (in this case consider Indexing Code G09G 2300/0876 as well).
- Striped or segmented common electrodes.
- Driving of electrode groups.
- Driving with additional line selector (shift register).
- Use of common electrodes as additional selection line.
- Problems related to resistance or capacity of common electrodes (if compensated via the same).
- Pixel voltage manipulation via common electrode(s).
- Increase pixel voltage (by modifying counter electrode voltage at appropriate time).
- Application of compensation voltages (e.g.: feedthrough, crosstalk, view angle, temperature) via the counter electrodes.

G09G 3/3659

{the addressing of the pixel involving the control of two or more scan electrodes or two or more data electrodes, e.g. pixel voltage dependant on signal of two data electrodes}

Definition statement

This place covers:

- Pixel selection or control:
- logical AND/OR (in connection with several pixel TFTs)
- via additional gate lines (two per pixel)
- via adjacent gate lines (each gate line used for two pixels)
- Control of D/A converter in pixel (via additional lines)
- Control of variable capacitor in pixel
- Pixel voltage manipulation
- pixel capacitor or supplementary capacitor connected to (or adjacent to)
- GATE line (first gate line selects TFT, second manipulates pixel voltage)
- DATA line (voltage difference on data lines defines pixel voltage)
- pixel voltage defined by voltage between a gate line and a data line
- Redundancy in the driving, precharging or symmetry
- pixel driven twice, once via a first TFT and a first data line, then via second TFT and second data line
- structures with multiple TFTs (multiple redundant selection or data paths).

G09G 3/3662

{using plasma-addressed liquid crystal displays}

Definition statement

This place covers:

Illustrative example of subject matter classified in this group:

EP0651368

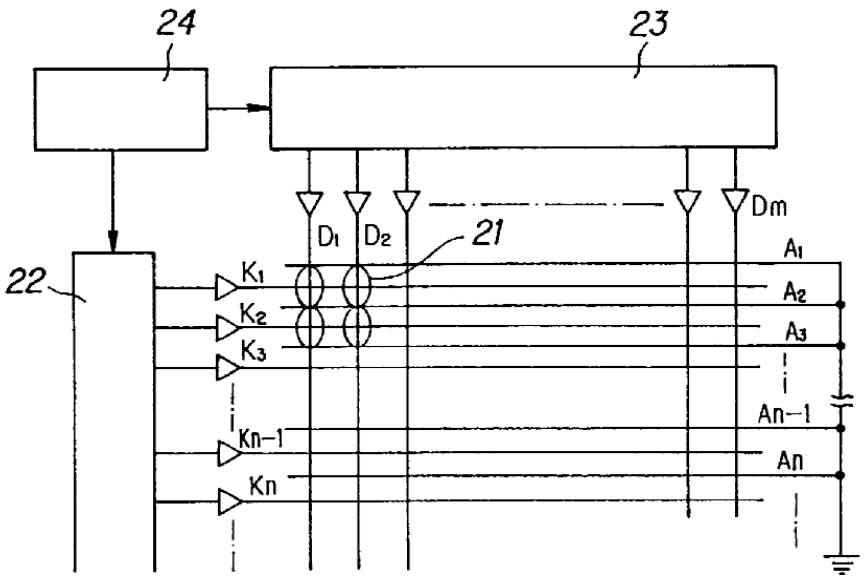

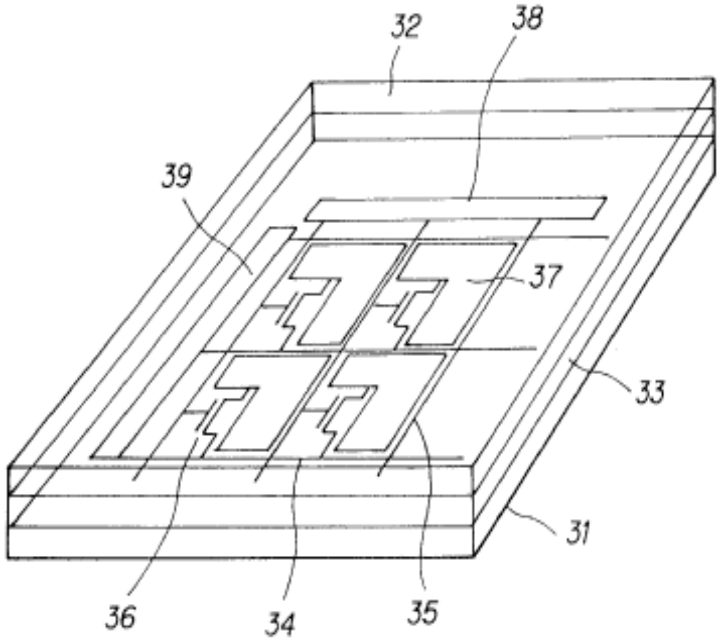

G09G 3/3666

{with the matrix divided into sections}

Relationships with other classification places

Video-walls, which consist out of modules, meant to be flexibly combined into a bigger size display, e.g. for installation or configuration purposes (see G06F 3/1446 and G09G 2300/026).

Matrices where the split has no impact on the driving, i.e. it is just a convenient constructional measure or it serves other purposes (heat dispersion etc.). Possible classifications for such cases are again in G06F 17/50, H01L 27/00, or in groups related to the physical structure of specific display technologies (e.g. G02F 1/13 for LCDs).

Splitting of matrices in a way that the resulting structure cannot be driven independently from each other, e.g. driving odd lines from one driver and even lines from another driver.

G09G 3/367

{with a nonlinear element in series with the liquid crystal cell, e.g. a diode, or M.I.M. element}

Definition statement

This place covers:

Control of pixel circuits wherein a diode string or a variable resistor is connected in series with the LC cell.

G09G 3/3674

{Details of drivers for scan electrodes}

References

Informative references

Attention is drawn to the following places, which may be of interest for search:

Scan driver details for non-LCD panels	G09G 2310/0267

G09G 3/3685

{Details of drivers for data electrodes}

References

Informative references

Attention is drawn to the following places, which may be of interest for search:

Details of drivers for data electrodes, other than drivers for liquid crystal, plasma or OLED displays	G09G 2310/0275

Special rules of classification

Documents receiving this code usually do not receive G09G 2310/0275 .

However, documents should be given the following codes in addition to G09G 3/3685, if applicable when they contain the corresponding details:

- Digital gray scale data driver in matrix panels, e.g. including D/A converter G09G 2310/027
- The data driver communicating data to the pixels by means of a current G09G 2310/0272 .

G09G 3/3696

{Generation of voltages supplied to electrode drivers}

Definition statement

This place covers:

Generation of driving voltages, as distinguished from power supply voltages, to be used by the drivers for the generation of waveforms applied to the electrodes.

Although some of the driving voltages may possibly be coincident with the power supply voltages (normally the extreme voltage values), driving voltages serve the purpose of composing an electrode addressing waveform, rather than supplying power to a functional unit; driving voltages may be representative of gradation levels (AM gradations) or may merely be levels required by a complex waveform (e.g. in the addressing of passive matrix LCDs, FLCDs, electrophoretic panels etc).

The lines/electrodes to which driving voltages are applied may or may not draw power from the generating circuit; driving voltages may normally be regarded as reference voltages, and normally for them only very small fluctuations are tolerated.

The generation of voltages is different than the generation of signals applied to the electrodes.

Illustrative examples:

- US2007046600 (Generation, by means of an arrangement of resistor ladders and selectors of voltages corresponding to gradation levels for an active matrix LCD, that take into account also the required gamma correction; the generated voltages are then selectively applied to the signal lines by the corresponding driver)
- US2008007502 (Charge pumps are used to generated voltage levels used for driving an LCD; not necessarily corresponding to the power supply level of the circuitry, possibly higher)
- WO9100588 (Generation by means of arrangements of resistor ladders, buffers etc., of voltages used in the composition of (possibly) complex waveforms driving rows and columns in a passive LCD)

G09G 3/38

using electrochromic devices

References

Informative references

Attention is drawn to the following places, which may be of interest for search:

Control of e.g. intensity or colour of light based on electrochromic elements	G02F 1/15

Glossary of terms

In this place, the following terms or expressions are used with the meaning indicated:

Electrochromic devices	Comprise one or more electrochromic matrix-elements named cells or pixels or dots, etc, such as information displays. Each element is composed of at least two electrodes that are electrically connected via an ion-conducting medium, i. e. an electrolyte. The elements may change colour if the potential difference between the electrodes is changed. This colour change is caused by redox reactions, i. e. changes in the distribution of electric charge within the element. The colour changes are caused by changes in the spectral absorption and/or emission properties of electromagnetic radiation. With 'colour' we mean also the spectral properties outside the visible region, e.g. in the infrared and the ultraviolet regions.

G09G 5/00

Control arrangements or circuits for visual indicators common to cathode-ray tube indicators and other visual indicators (image data processing or generation, in general G06T)

Definition statement

This place covers:

Applicable when common to all display technology. By example when display technologies are not specific to LCD but to LCD, Plasma and OLEDS. (also CRTs but it is no more relevant in 2011).

Special rules of classification

See also image data processing or generation, in general G06T.

G09G 5/001

{Arbitration of resources in a display system, e.g. control of access to frame buffer by video controller and/or main processor}

Definition statement

This place covers:

Resolving memory contention by CRT controller and the CPU, eventually combined with refresh of the dynamic memory

Illustrative examples:

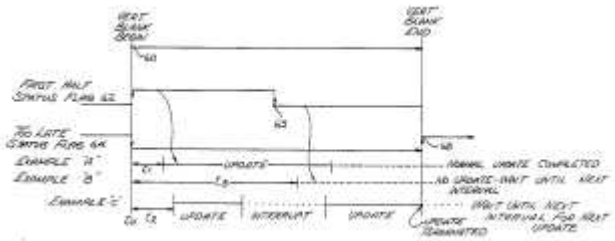

bit-map based: US4860251

display system with video synchronization pn:US2004212734

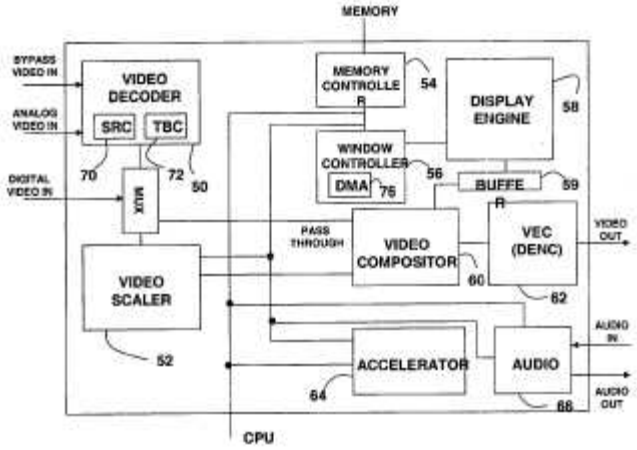

blending graphics and video surfaces pn:US2004130558

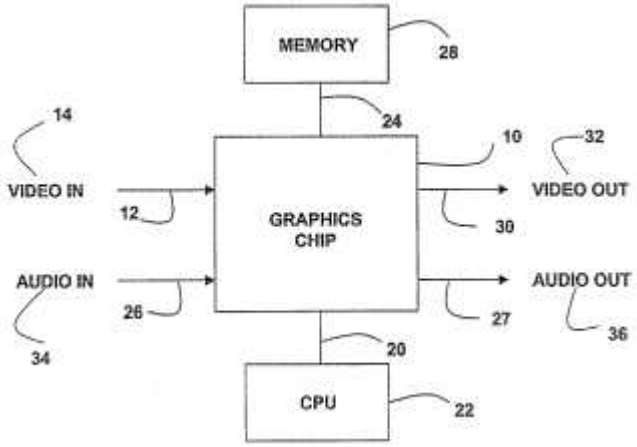

method for bitmapping and synchronization pn:US2003043161

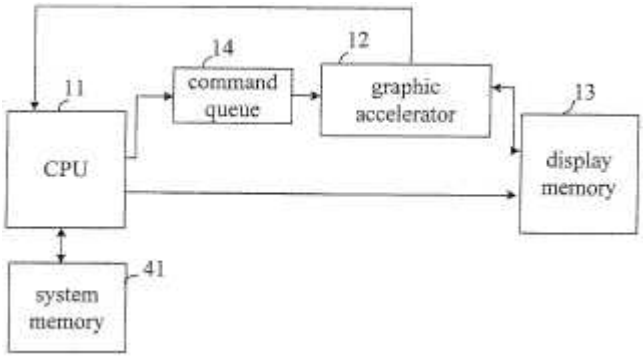

character based:

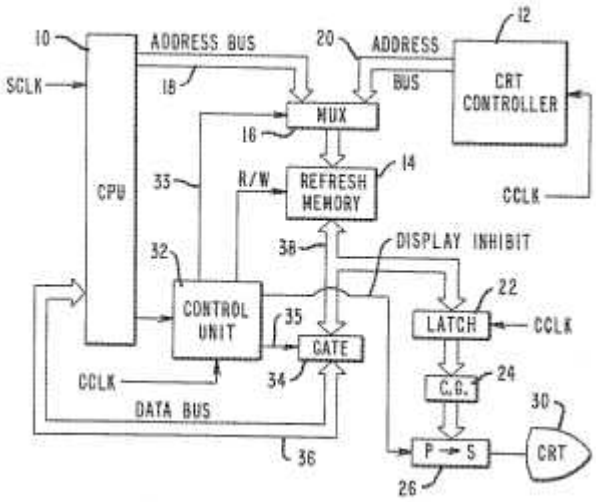

pn:US4581611

both bit-map and character based:

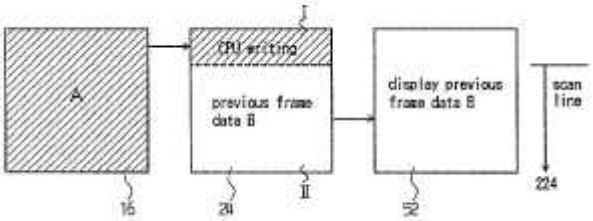

display control unit pn:US2001015727

generic:

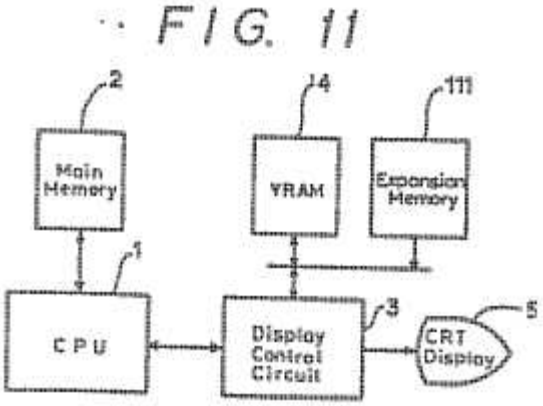

display control unit pn:EP0155499

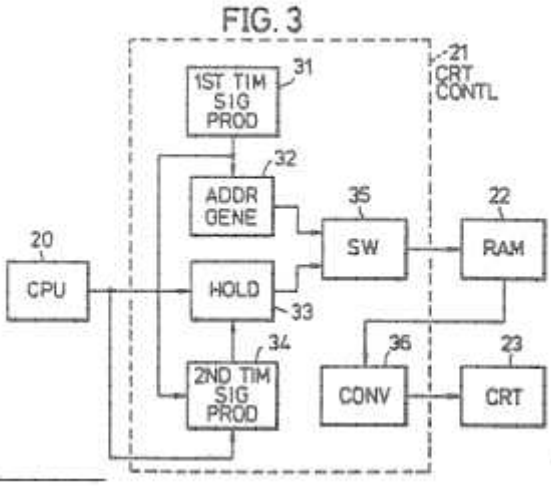

EP0254293

Special rules of classification

The documents in this class are subdivided in four sections:

1. bit-map only - used when the system is clearly bit mapped (newer documents); see also **G09G500a** bit-map (G09G)

2. character based only - used when the system is clearly character based (older documents); see also **G09G500a** character based (G09G)

3. both character and bit-map - used when the document discloses both a character based and a bit mapped system or when the system includes both possibilities;

4. generic / no indication - used when it is not clear if it is charachter based or bit map or if it is not relevant to know (general arbitration problems)

Refresh of the memory in combination with refreshing the screen (i.e. reading the memory)

- G09G 5/222 Control of the character-code memory
- G09G 5/39 Control of the bit-mapped memory

Memory allocation: G06F 12/02 and subgroups

G09G 5/003

{Details of a display terminal, the details relating to the control arrangement of the display terminal and to the interfaces thereto (specific for a CRT G09G 1/165; for a flat panel G09G 3/2092)}

Definition statement

This place covers:

Details of a display terminal (*1), e.g. details of the display terminal controller, interconnection and interface between display terminal controller and display device controller, buffering of image data, calibration, on-screen display of menu data for setting of parameters, data processing independent of the type of display device.

References

Limiting references

This place does not cover:

Colour circuits specific for CRT	G09G 1/28

Special rules of classification

Even though the groups G09G 1/165 and G09G 3/2092 still exist, they should be used in very special cases only in which the connection with the technology of the display unit (CRT or flat panel) determines the content of the document.

The codes G09G 5/003 and below apply only if a monitor-architecture can be identified (the same rule applies for G09G 3/2092 and G09G 1/165).

The following groups should also be searched, because they have not yet been purged of documents for G09G 5/003

G09G 3/3611: control of matrices with row and column drivers

G06F 3/147: using display panels

G06F 3/153: using cathode-ray tubes

G09G 1/285: interfacing with colour displays

Glossary of terms

In this place, the following terms or expressions are used with the meaning indicated:

Display terminal	an apparatus connected to a source of display data (usually a graphics controller of a computer, or directlz to the computer itself) adapted to display images generated by this source of data. In general a "display terminal" is an arrangement including a display device (e.g. a CRT with its driving electronic or a flat panel including its row and column drivers), a display device controller (the hardware and software (usually a microprocessor) that controls the display device and that allows its functioning by, for example, generating the signals that are needed to bring the data to the drivers) and a display terminal controller (the hardware and software used to control the display terminal as a whole and to interface the display terminal to the graphics controller, to adapt data and control signals, for example in an LCD driven by a VGA type graphics controller).

G09G 5/005

{Adapting incoming signals to the display format of the display terminal}

References

Informative references

Attention is drawn to the following places, which may be of interest for search:

Scaling the whole image or part thereof	G06T 3/40

Special rules of classification

The codes G09G 5/003 and below (thus including G09G 5/005) apply only if a monitor-architecture can be identified (the same rule applies for G09G 3/2092 and G09G 1/165).

Used to be a subgroup of G09G 5/006 (now G09G 5/006), this code applies independently of where the adaptiation is done, in the interface or in the controller of the terminal. Most of the documents in this group will relate to flat panels, since a CRT does not need, in general, any adaptation. It was decided, however, to have a single classification for all the documents dealing with this problem.

The output of the interface usually will be a frame or a line buffer, the latter may well be included in the data driver of the visualization unit.

The following groups should also be searched, because they have not yet been purged of documents for G09G 5/005:

G09G 3/3611: control of matrices with row and column drivers

G06F 3/147: using display panels

G06F 3/153: using cathode-ray tubes

G09G 1/285: interfacing with colour displays

Notes on new groups:

G09G 5/006 is former G09G 5/006 and G09G 5/006

G09G 5/005 is former G09G 5/005

G09G 5/008 is former G09G 5/008

G09G 5/006

{Details of the interface to the display terminal (specific for a display terminal using a CRT G09G 1/167; using a flat panel G09G 3/2096; circuits for interfacing with colour displays G09G 5/04)}

Definition statement

This place covers:

Interface between a graphics controller and a display terminal

Illustrative examples:

US2003033417 - A special interface usable with everything, espacially to transmit video (and audio) data to be viualized on a display unit. It includes USB, but a lot more; it can also transmit graphic primitives. Two classes were given, G09G 5/006 and G06F 3/14.

References

Limiting references

This place does not cover:

Circuits for interfacing with colour displays	G09G 5/04

References out of a residual place

Examples of places in relation to which this place is residual:

Specific for a display terminal using a CRT	G09G 1/167
Specific for a display terminal using a flat panel	G09G 3/2096

Informative references

Attention is drawn to the following places, which may be of interest for search:

Interconnection of, or transfer of information or other signals, between memories, I/O devices, or CPUs	G06F 13/00
Communication control i.e. on communication lines at input to interface.	H04L 29/02
Interface between a recording apparatus and a television receiver.	H04N 5/775

Special rules of classification

Documents with interfaces to terminals will be classified in this group unless the structure of the interface is very much tied to the technology of the display (exceptional cases).

The codes G09G 5/003 and below (thus including G09G 5/006) apply only if a monitor-architecture can be identified (click to see definition; the same rule applies for G09G 3/2092 and G09G 1/165).

For picture scaling by changing the sampling timing of the analog signal G09G 5/005 is applied

FIG.1

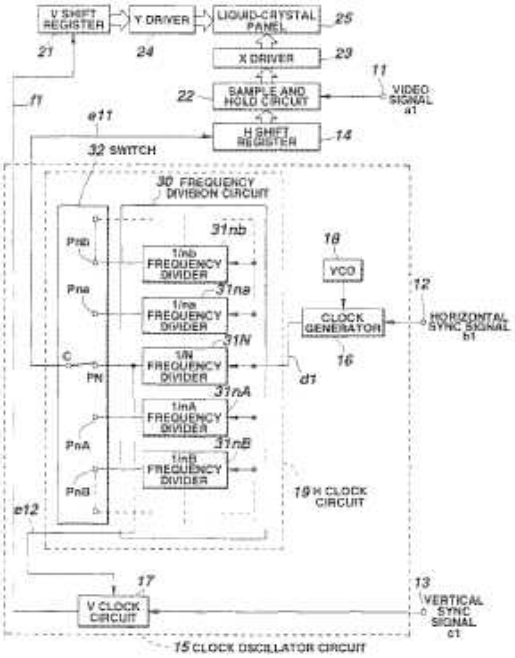

EP0765078

FIG.1

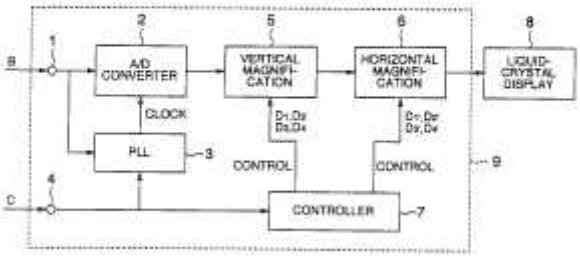

EP0821340

FIG. 1

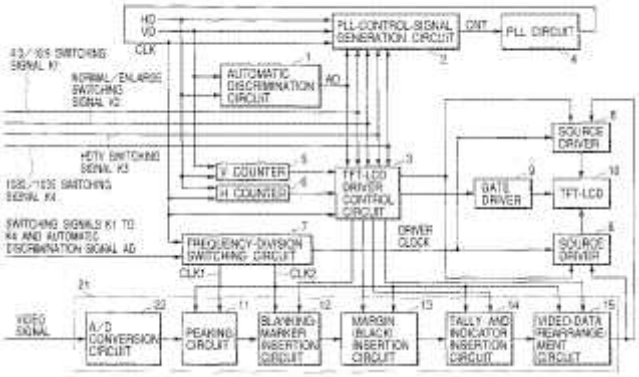

EP1056285

For clock generation (typically by PLL) G09G 5/008 (former G09G 5/008) is applied

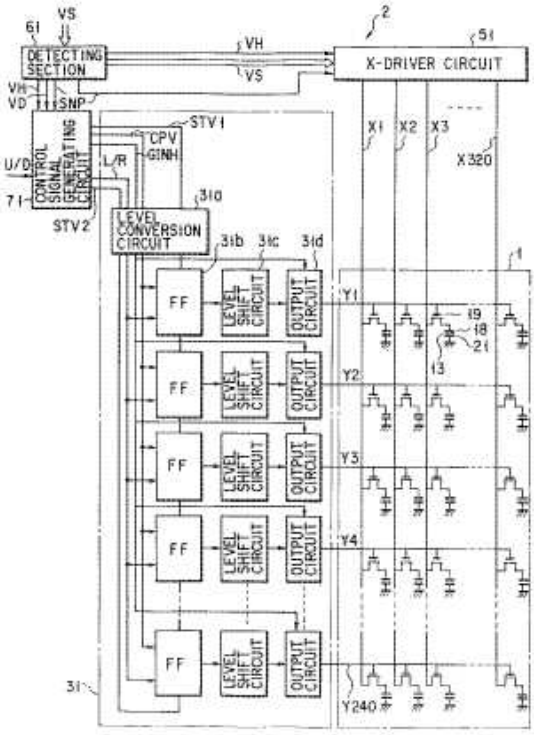

US6049318

Notes on new groups:

G09G 5/006 is former G09G 5/006 and G09G 5/006

G09G 5/005 is former G09G 5/005

G09G 5/008 is former G09G 5/008

The following groups should also be searched, because they have not yet been purged of documents for G09G 5/005:

G09G 3/3611: control of matrices with row and column drivers

G06F 3/147: using display panels

G06F 3/153: using cathode-ray tubes

G09G 1/285: interfacing with colour displays

G09G 5/008

{Clock recovery}

Definition statement

This place covers:

Some digital data streams, especially high-speed serial data streams (also for analog signal with hsync and vsync synchro decoding to recreate the pixel clock) are sent without an accompanying clock signal. The receiver generates a clock from an approximate frequency reference, and then phase-aligns to the transitions in the data stream with a phase-locked loop (PLL). This process is commonly known as clock and data recovery (CDR).

In order for this scheme to work, a data stream must transition frequently enough to correct for any drift in the PLL's oscillator. The limit for how long a clock recovery unit can operate without a transition is known as its maximum consecutive identical digits (CID) specification. To ensure frequent transitions, some sort of encoding is used; 8B/10B encoding is very common, while Manchester encoding serves the same purpose.

Special rules of classification

This group used to be a subgroup of G09G 5/006 (now G09G 5/006; see notes there), this code applies if the clock recovery is performed within the display interface of a monitor-architecture. Most of the documents in this group will relate to flat panels, since a CRT does not need, in general, any adaptation. It was decided, however, to have a single classification for all the documents dealing with this problem.

Notes on new groups:

G09G 5/006 is former G09G 5/006 and G09G 5/006

G09G 5/005 is former G09G 5/005

G09G 5/008 is former G09G 5/008

The following groups should also be searched, because they have not yet been purged of documents for G09G 5/005:

G09G 3/3611: control of matrices with row and column drivers

G06F 3/147: using display panels

G06F 3/153: using cathode-ray tubes

G09G 1/285: interfacing with colour displays