G01F

MEASURING VOLUME, VOLUME FLOW, MASS FLOW OR LIQUID LEVEL; METERING BY VOLUME (milk flow sensing devices in milking machines or devices A01J 5/01; measuring or recording blood flow A61B 5/02, A61B 8/06; metering media to the human body A61M 5/168; burettes or pipettes B01L 3/02; arrangements of liquid volume meters or volume-flow meters in liquid-delivering apparatus, e.g. for retail sale purposes, B67D 7/16; pumps, fluid motors, details common to measuring or metering devices and pumps or fluid motors F01 - F04; {sampling G01N 1/00}; locating, determining distance or velocity using reflection or reradiation of radio waves, analogous arrangements using other waves G01S; systems for ratio control G05D 11/00; {coin-freed apparatus for metering flow of liquid or gas G07F 15/00})

Definition statement

This place covers:

- Apparatus or methods for measuring the volume flow or mass flow of fluids or fluent solid materials.
- Apparatus or methods for metering by volume.
- Apparatus or methods for measuring the capacity of containers or cavities, or the volume of solid bodies, fluids or fluent solid materials.
- Level indicators.
- Details, accessories, testing or calibrating of the apparatus as described.

References

Limiting references

This place does not cover:

Measuring linear dimensions to determine volume	G01B
Sampling; Preparing specimens for investigation	G01N 1/00
Ratio control	G05D 11/00

Application-oriented references

Examples of places where the subject matter of this place is covered when specially adapted, used for a particular purpose, or incorporated in a larger system:

Milk flow sensing devices in milking machines or devices	A01J 5/01
Food containers with dispensing devices for dispensing a certain quantity of powdered or granulated foodstuffs	A47G 19/34
Apparatus for making beverages having water-level controls	A47J 31/56
Measuring blood flow	A61B 5/026, A61B 8/06
Metering media introduced into the human body, e.g. drip meters	A61M 5/168
Controlling the quantity of fluent-solid material fed into a container during packaging by volumetric measurement	B65B 1/36
Controlling the quantity of plastic material, semi-liquids, liquids, or mixed solids and liquids, fed into a container during packaging by volumetric measurement	B65B 3/30
Separating measured quantities from supply by volume measurement	B65B 37/20

Bottling liquids or semi-liquids with provision for metering the liquids to be introduced, e.g. when adding syrups	B67C 3/20
Flowmeters used in apparatus or devices for dispensing beverages on draught	B67D 1/0855
Arrangements of liquid volume meters or volume-flow meters in liquid-delivering apparatus, e.g. for retail sale purposes	B67D 7/16
Measuring liquid level in wells	E21B 47/04
Indicating devices for lubricant level	F01M 11/12
Measuring intake air flow to generate a control signal for control of supply of combustible mixture in combustion engines	F02D 41/18
Proportioning devices in lubricating systems	F16N 27/00
Arrangements for measuring the quantity of conveyed product in pipe-lines	F17D 3/18
Adaptation of level indicators to, or mounting on, steam boilers	F22B 37/78
Controlling water feed or water level for steam generation	F22D 5/00
Rainfall or precipitation gauges	G01W 1/14
Apparatus actuated by coins, cards or the like with meter-controlled dispensing of liquid or gas	G07F 15/00
Reactor-coolant flow measuring or monitoring in nuclear reactors;Moderator- or coolant-level detecting devices in nuclear reactors	G21C 17/032, G21C 17/035
Accumulators combined with arrangements for measuring, testing, or indicating condition, e.g. level or density of the electrolyte	H01M 10/48

Informative references

Attention is drawn to the following places, which may be of interest for search:

Filters	B01D
Burettes or pipettes	B01L 3/02
Weighing a continuous stream of material during flow	G01G 11/00
Measuring pressure	G01L
Measuring speed of fluids, e.g. of air stream	G01P 5/00
Determining a distance or velocity using sonar, radar or lidar techniques	G01S
Control of flow; Control of level	G05D 7/00, G05D 9/00
Alarm devices	G08B
Electric switches operated by change of liquid level, e.g. float switches, or by a change of fluid flow	H01H 35/18, H01H 35/24

G01F 1/00

Measuring the volume flow or mass flow of fluid or fluent solid material wherein the fluid passes through the meter in a continuous flow (measuring a proportion of the volume flow G01F 5/00; measuring speed of flow G01P 5/00; indicating presence or absence of flow G01P 13/00; regulating quantity or ratio {G05D 7/00, G05D 11/02})

Definition statement

This place covers:

Devices specially adapted to be used in open channels

Devices operating

- by measuring the level variations of storage tanks relative to the time
- by using mechanical effects
- by using electric or magnetic effects
- by measuring frequency, phaseshift, or propagation time of electro-magnetic or other waves, e.g. ultrasonic flowmeters
- by using thermal effects

Devices using marked regions or existing inhomogeneities within the fluid stream, e.g. statistically occurring variations in a fluid parameter Devices for measuring pulsing fluid flows

Devices for measuring flow of a fluid or flow of a fluent solid material in suspension in another fluid

Devices for measuring mass flow of a fluid or a fluent solid material

Relationships with other classification places

Although measuring speed of fluids is classified in G01P 5/00, determination of speed of fluids flowing through tubes is considered as belonging to flow measurement and is generally not classified in G01P 5/00, but in G01F, e.g. G01F 1/66, even if volume flow is not explicitly mentioned in the documents.

References

Limiting references

This place does not cover:

Measuring a proportion of volume flow	G01F 5/00
Weighing a continuous stream of material during flow	G01G 11/00
Indicating presence or absence of flow	G01P 13/00

Informative references

Attention is drawn to the following places, which may be of interest for search:

Fluidic oscillators	F15C 1/00
Detection means in general	G01H
Measuring speed by using correlation means in general	G01P 3/80, G01P 5/22
Arrangements or constructions of Pitot tubes for measuring speed of fluids	G01P 5/165

Magnet, inductances; transformers; selection of materials for their magnetic properties	H01F

Special rules of classification

G01F 1/37 and G01F 1/38 take precedence over G01F 1/363 and G01F 1/366.

G01F 1/66 takes precedence over G01F 1/56.

G01F 1/582 takes precedence over G01F 1/586.

G01F 1/58 takes precedence over G01F 1/64.

G01F 1/663, G01F 1/665 and G01F 1/666 take precedence over G01F 1/667.

G01F 1/6847 takes precedence over G01F 1/688.

G01F 1/7082 - G01F 1/7088 take precedence over G01F 1/712.

Devices using Peltier or Seebeck effects are also classified under G01F 1/6888.

Devices for measuring pulsing fluid flow and devices for measuring bidirectional flow are classified in G01F 1/72.

Glossary of terms

In this place, the following terms or expressions are used with the meaning indicated:

Multiple exciters or detector pairs	Vibrating tube Coriolis mass flowmeters with more than one driver or more than one pair of pick-offs (this group is a subgroup of the previous one but, at present, incomplete)
Special driving or detecting modes	Vibrating tube Coriolis mass flowmeters with special/unusual arrangements of exciters and/or detectors, such as: more than one driver or more than one detector pair; or unusual driving modes

G01F 1/002

{specially adapted to be used in open channels}

Definition statement

This place covers:

Illustrative example of subject matter classified in this group

US5684250

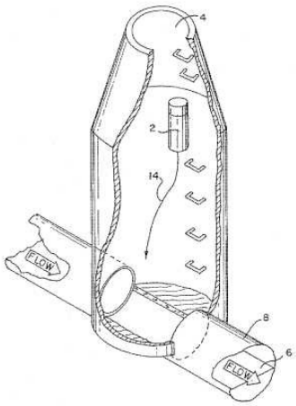

US2002066484

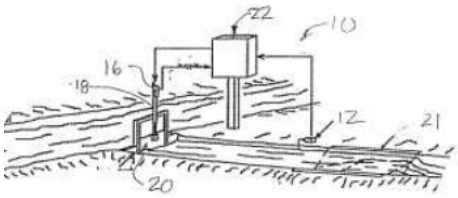

G01F 1/007

{by measuring the level variations of storage tanks relative to the time}

Definition statement

This place covers:

Illustrative example of subject matter classified in this group

EP2265905

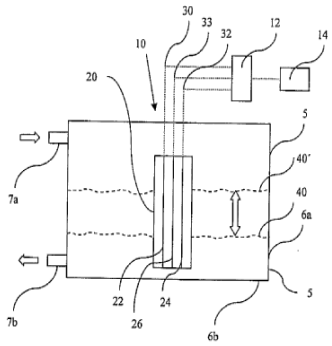

Fig.: 1

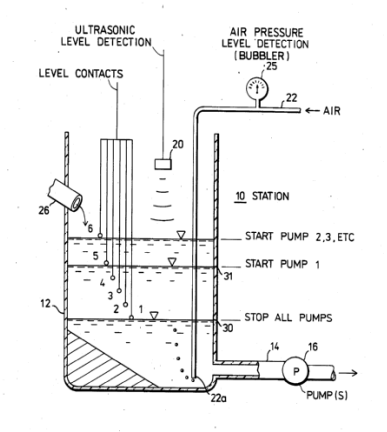

US4669308 FIG 1

G01F 1/056

{Orbital ball flowmeters}

Definition statement

This place covers:

Illustrative example of subject matter classified in this group

WO2008044917

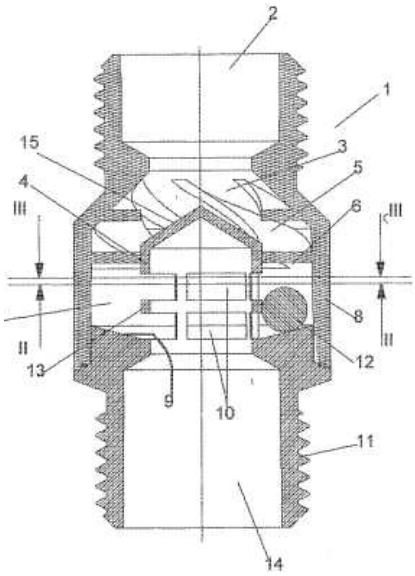

G01F 1/06

using rotating vanes with tangential admission

Definition statement

This place covers:

Illustrative example of subject matter classified in this group

US6079281

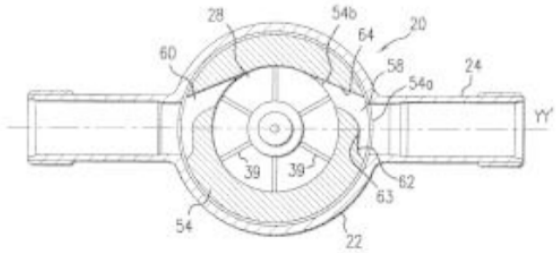

G01F 1/10

using rotating vanes with axial admission

Definition statement

This place covers:

Illustrative example of subject matter classified in this group

WO2004020894

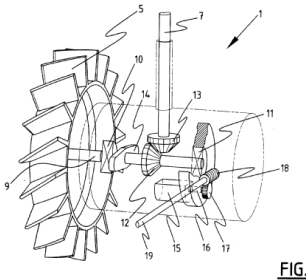

FIG. 2

EP1992916

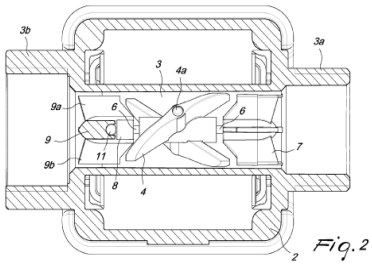

Fig. 2

G01F 1/20

by detection of dynamic effects of the fluid flow

Definition statement

This place covers:

Illustrative example of subject matter classified in this group

WO2006062007

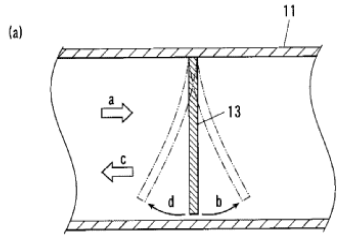

DE102007057060

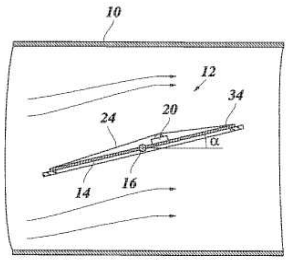

G01F 1/203

{Jet stream flowmeters}

Definition statement

This place covers:

Illustrative example of subject matter classified in this group

US3709213

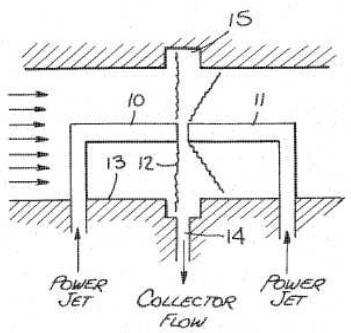

US3705534

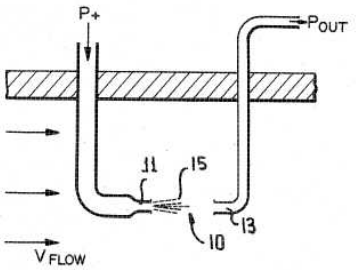

G01F 1/206

{Measuring pressure, force or momentum of a fluid flow which is forced to change its direction}

Definition statement

This place covers:

Illustrative example of subject matter classified in this group

DE102007000445

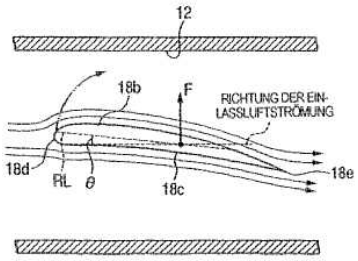

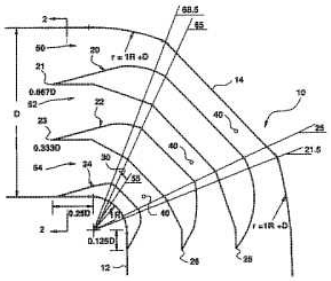

US5687768

US5571974

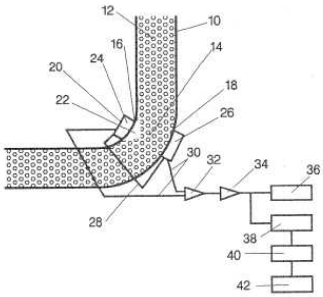

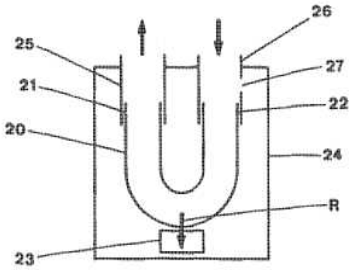

WO9702470

G01F 1/3227

{using fluidic oscillators (fluidic oscillators per se F15C 1/00)}

Definition statement

This place covers:

Illustrative example of subject matter classified in this group

EP1094303 EP0295845 US4182172

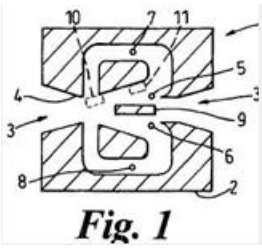

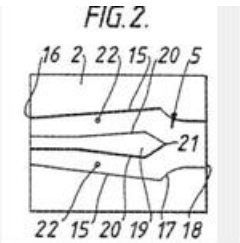

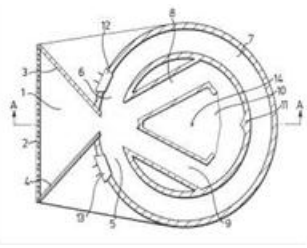

G01F 1/52

by measuring the height of the fluid level due to the lifting powder of the fluid flow

Definition statement

This place covers:

Illustrative example of subject matter classified in this group

EP0783056

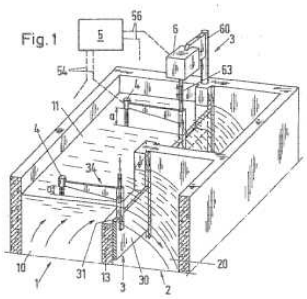

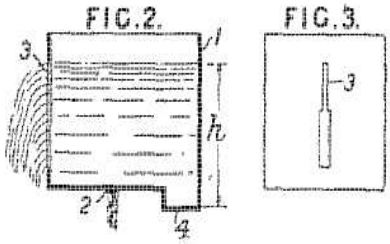

GB402685

G01F 1/54

by means of chains, flexible bands or wires introduced into and moved by the flow

Definition statement

This place covers:

Illustrative example of subject matter classified in this group

WO9300571

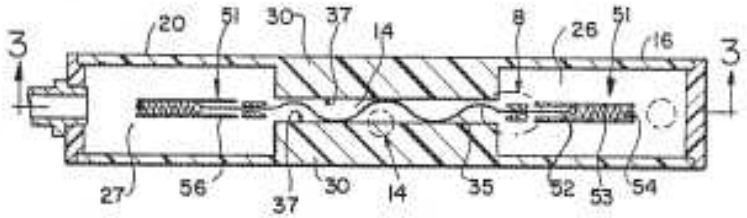

US4594890

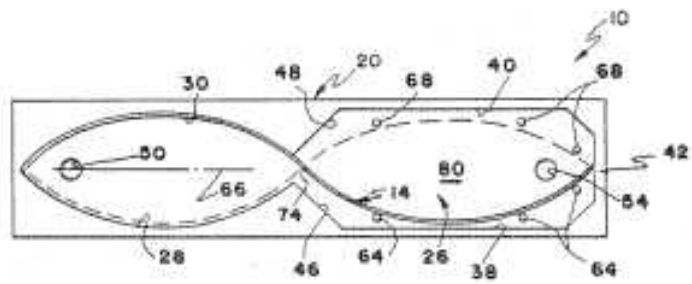

G01F 1/64

by measuring electrical current passing through the fluid flow; measuring electrical potential generated by the fluid flow, e.g. by electrochemical, contact or friction effects (G01F 1/58 takes precedence)

Definition statement

This place covers:

Illustrative example of subject matter classified in this group

US3742263

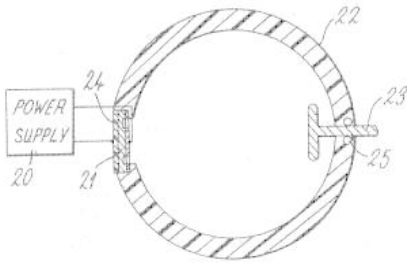

WO2010000977

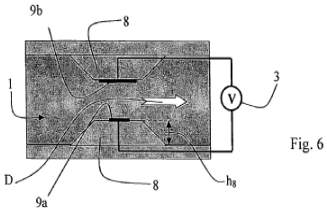

Fig. 6

G01F 1/661

{using light}

Definition statement

This place covers:

Illustrative example of subject matter classified in this group

US3709599

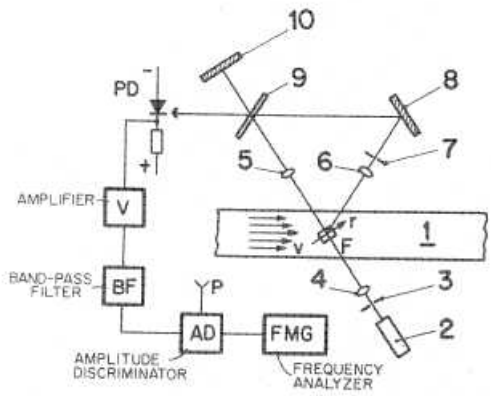

G01F 1/662

{Constructional details}

Definition statement

This place covers:

Illustrative example of subject matter classified in this group

US2007227261

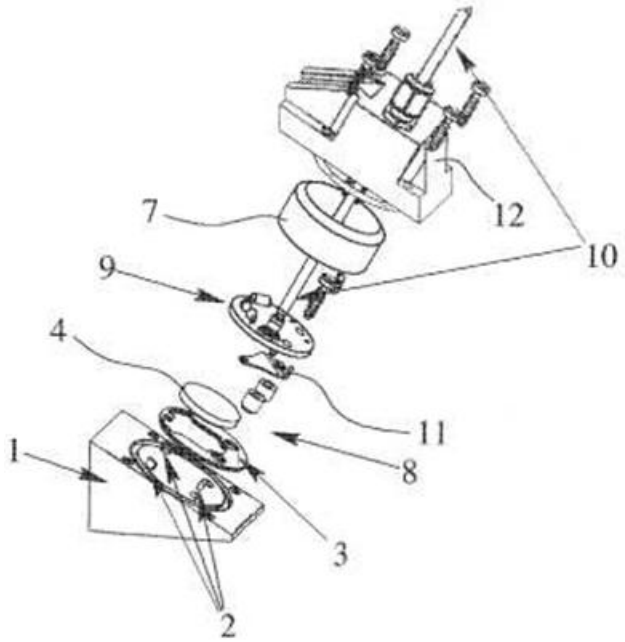

EP2236993

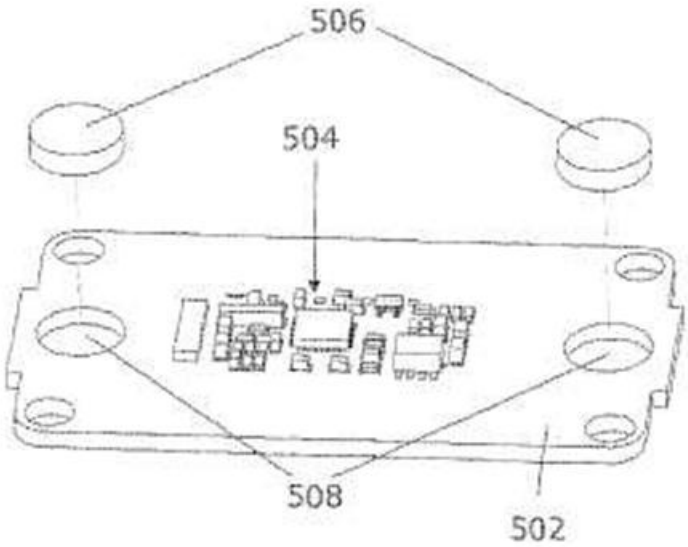

Fig. 5A

G01F 1/665

{of the drag-type}

Definition statement

This place covers:

Illustrative example of subject matter classified in this group

EP1728054

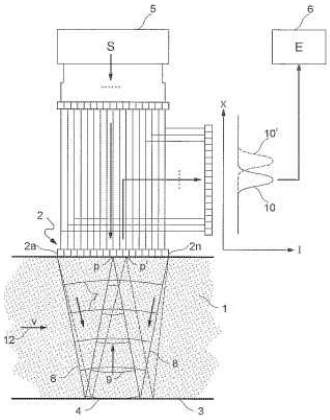

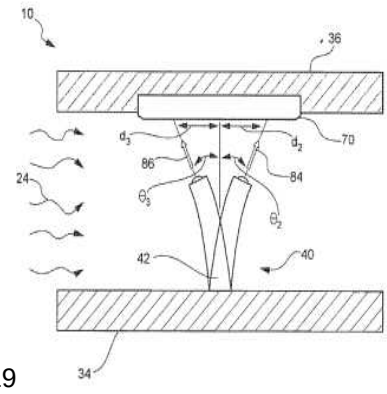

US2008088819

G01F 1/666

{by detecting noise and sounds generated by the flowing fluid}

Definition statement

This place covers:

Illustrative example of subject matter classified in this group

US2009158858

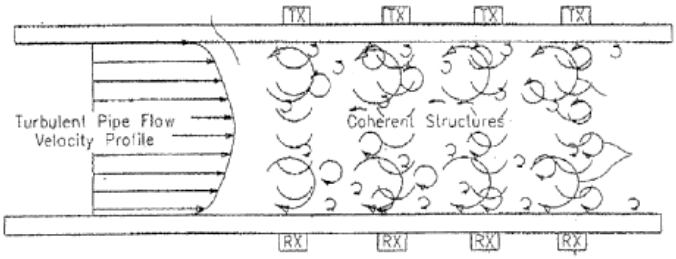

FIG. 1

G01F 1/667

{Schematic arrangements of transducers of ultrasonic flowmeters; Circuits therefor (G01F 1/663, G01F 1/665, G01F 1/666 take precedence)}

Definition statement

This place covers:

Illustrative example of subject matter classified in this group

US2009138215

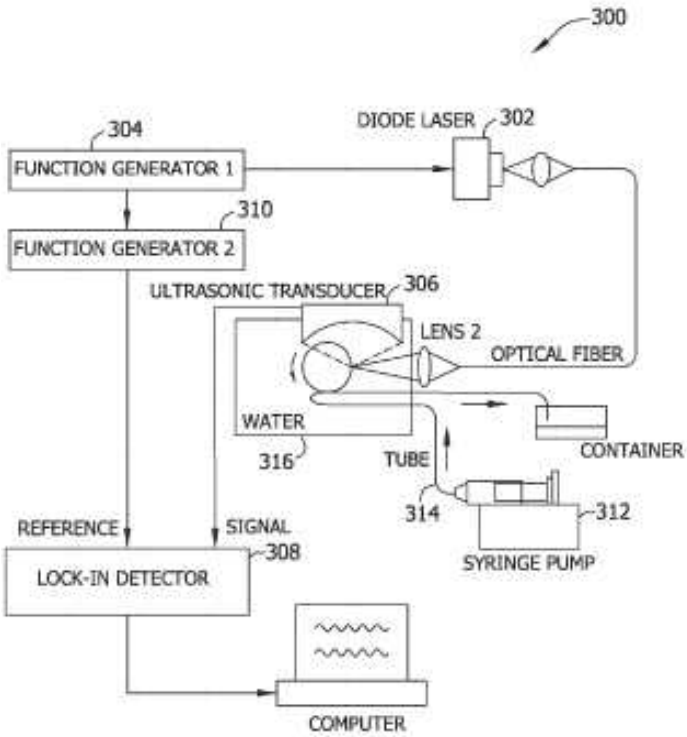

EP2072972

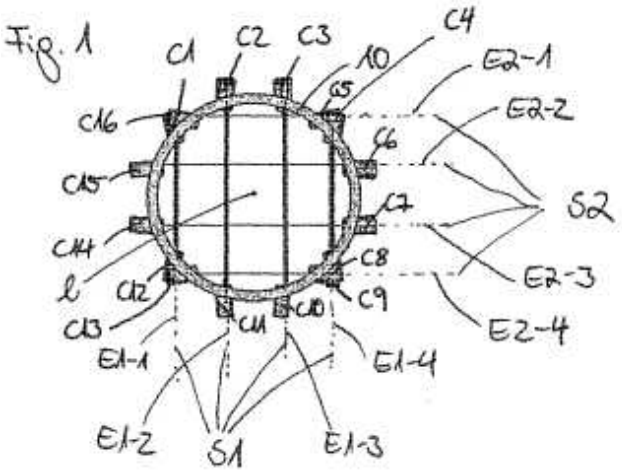

US2002105340

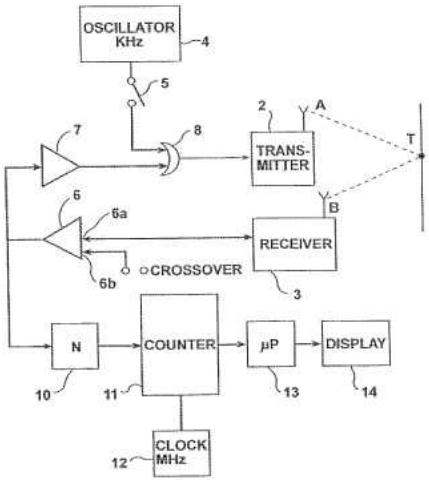

G01F 1/7048

{the concentration of electrical loaded particles giving an indication of the flow}

Definition statement

This place covers:

Illustrative example of subject matter classified in this group

US2005235757

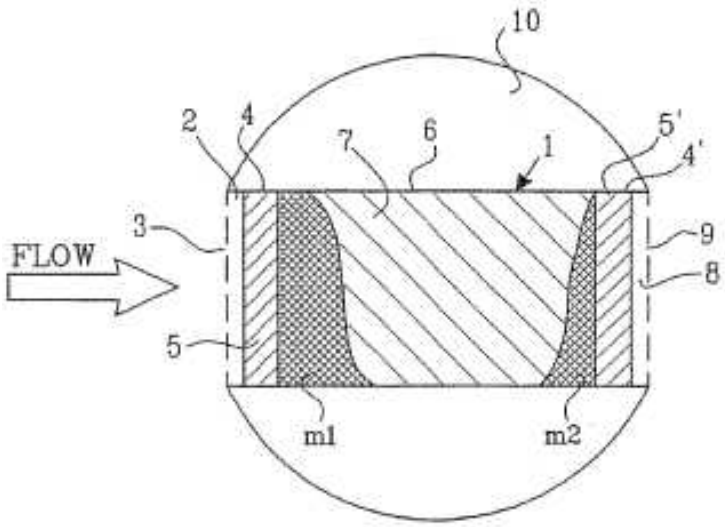

G01F 1/7088

{using electrical loaded particles as tracers}

Definition statement

This place covers:

Illustrative example of subject matter classified in this group

EP1907801

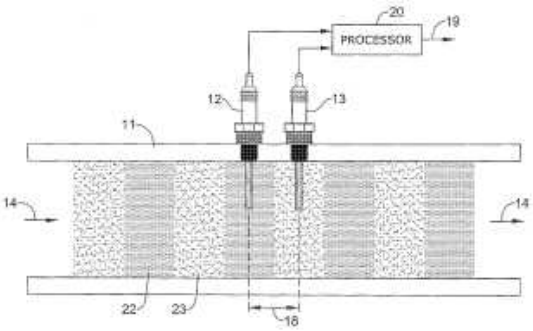

EP1754957

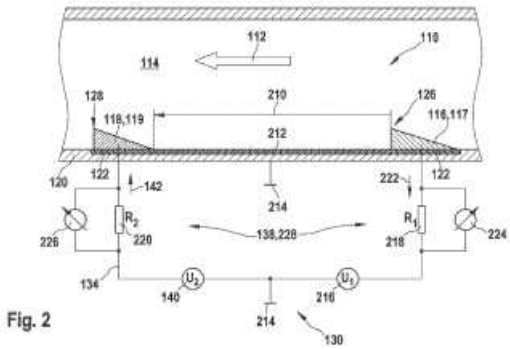

Fig. 2

G01F 1/72

Devices for measuring pulsing fluid flows

Definition statement

This place covers:

Illustrative example of subject matter classified in this group

DE102007038474

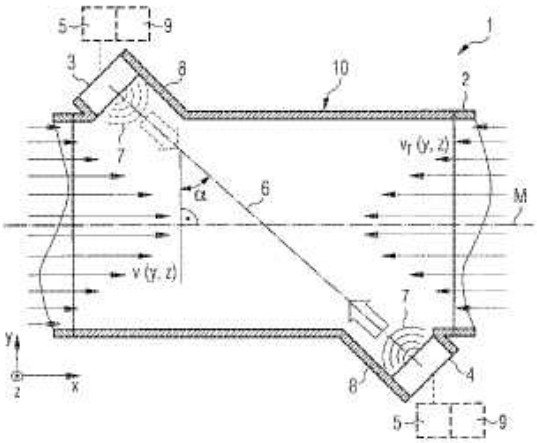

GB2447425

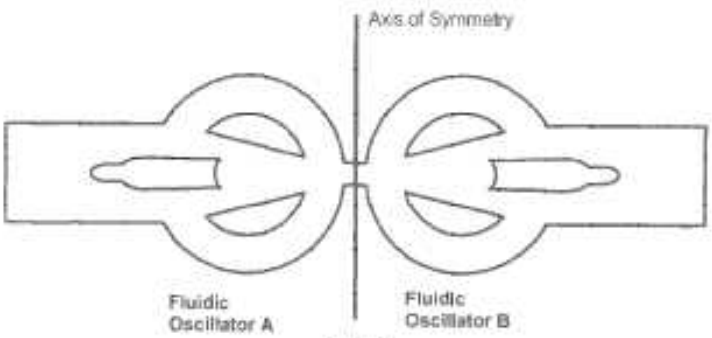

Figure 2

G01F 1/74

Devices for measuring flow of a fluid or flow of a fluent solid material in suspension in another fluid

Definition statement

This place covers:

Illustrative example of subject matter classified in this group

FR2936312

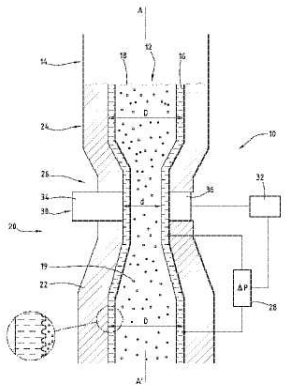

US7738084

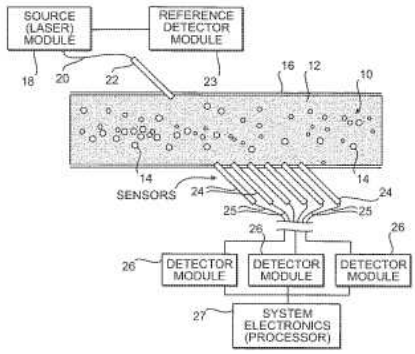

US2010280757

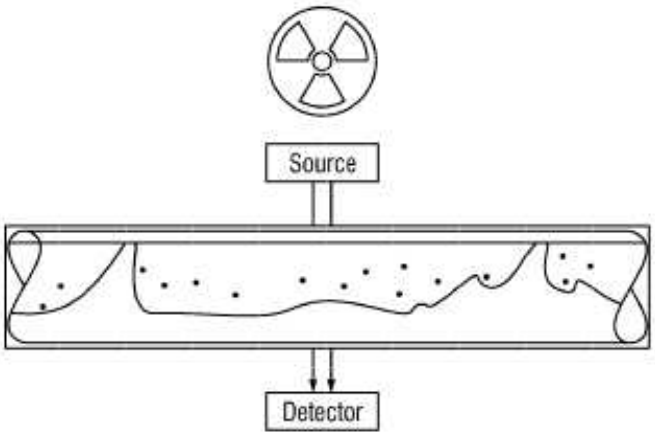

G01F 1/76

Devices for measuring mass flow of a fluid or a fluent solid material (weighing a continuous stream of material during flow G01G 11/00)

Definition statement

This place covers:

Illustrative example of subject matter classified in this group

GB2241789

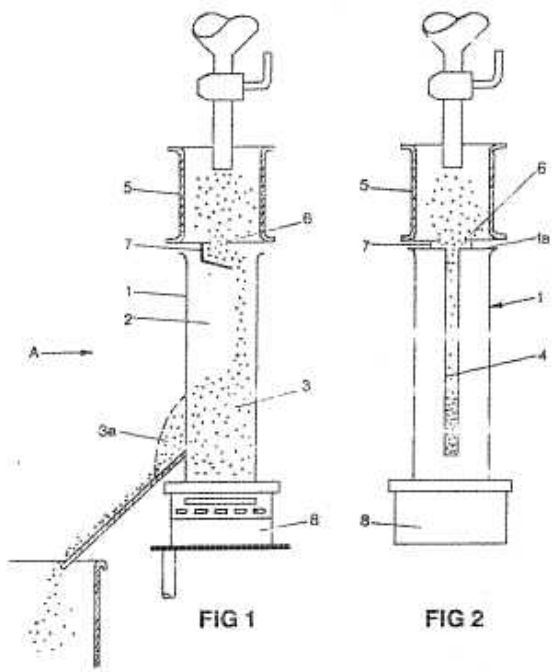

G01F 1/785

{using fluidic bridge circuits}

Definition statement

This place covers:

Illustrative example of subject matter classified in this group

EP0737302

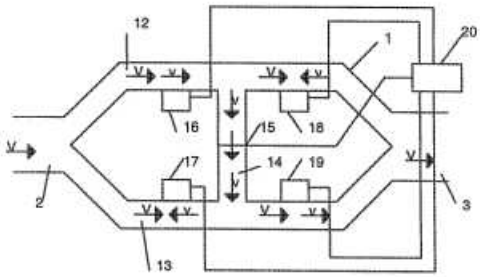

G01F 1/80

operating by measuring pressure, force, momentum, or frequency of a fluid flow to which a rotational movement has been imparted

Definition statement

This place covers:

Illustrative example of subject matter classified in this group

WO9702470

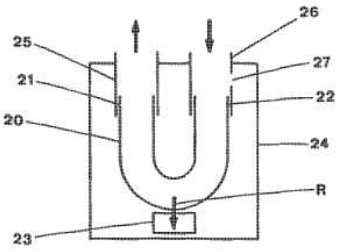

US2007193371

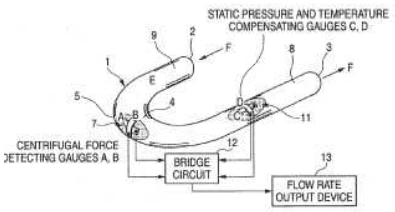

G01F 1/82

using a driven wheel as impeller and one or more other wheels or moving elements which are angularly restrained by a resilient member, e.g. spring member as the measuring device

Definition statement

This place covers:

Illustrative example of subject matter classified in this group

GB1087350

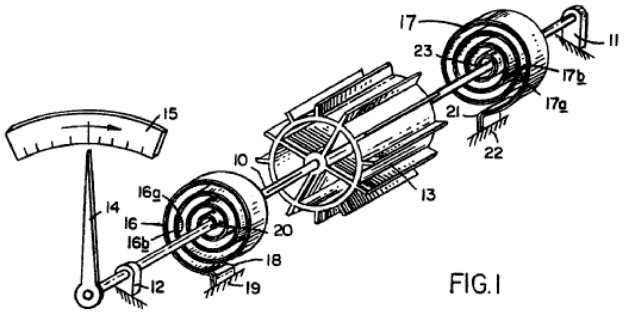

FIG. 1

G01F 1/8404

{details of flowmeter manufacturing methods}

Definition statement

This place covers:

Illustrative example of subject matter classified in this group

Details of flow meter manufacturing methods:

Methods for designing flow meters, e.g. numerical simulations of flow meter behaviour or modelling to refine the flow meter design (e.g.. eigenvector design): (XP002096659, WO99/28708, US2003097883, EP0271605,WO0165213)

WO0165213:

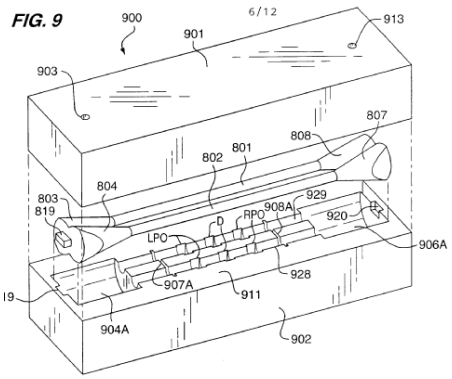

G01F 1/8409

{constructional details}

Definition statement

This place covers:

Illustrative example of subject matter classified in this group

Constructional details

G01F 1/8413

{means for influencing the flowmeter's motional or vibrational behaviour, e.g., conduit support or fixing means, or conduit attachments}

Definition statement

This place covers:

Illustrative example of subject matter classified in this group

Means for influencing the flow meter's motional or vibrational behaviour, e.g., conduit support or fixing means, or conduit attachments:

Details of tubes, casings or special casings for gyroscopic mass flow meters, e.g. central support manifold fixing the tube(s) ends US5343764:

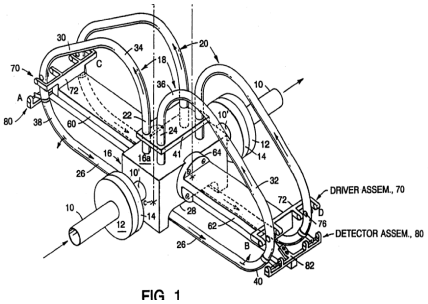

FIG. 1

improved node plates/brace bars: WO2009123632, US5370002;

stiffening means EP0547455, figs 1,3:

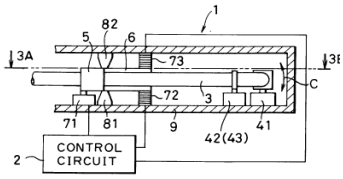

FIG.3A

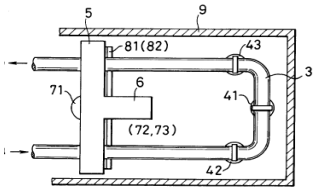

FIG.3B

Casings influencing the vibrational behaviour should go both to G01F 1/8409 and G01F 1/8413

G01F 1/8418

{motion or vibration balancing means}

Definition statement

This place covers:

Illustrative example of subject matter classified in this group

Motion or vibration balancing means:

US4957005, US2009145244, EP1001254, US2923154

Rebalancing means (e.g.. masses or actuators) EP0759542; Rebalanced flow meter design;

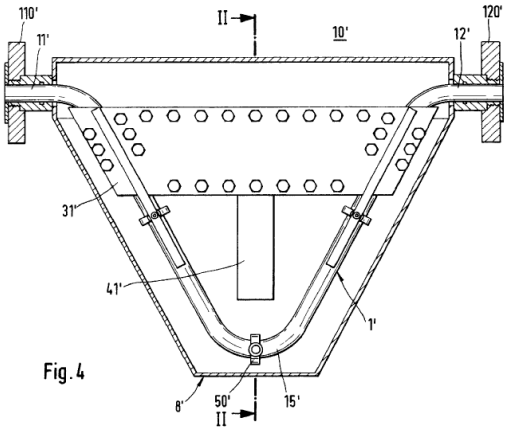

US2001035055:

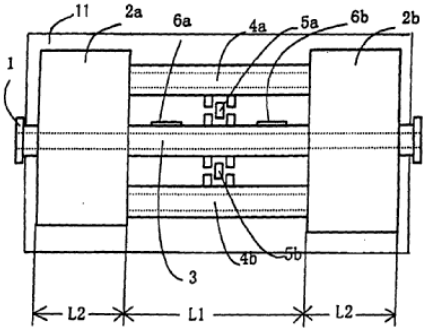

US2002020228:

G01F 1/8422

{exciters}

Definition statement

This place covers:

Illustrative example of subject matter classified in this group

Exciters: constructional details for exciters, FR2316582, EP1719983, WO8505677

G01F 1/8427

{detectors}

Definition statement

This place covers:

Illustrative example of subject matter classified in this group

Detectors: constructional details for detectors, e.g. details of the optical detectors US4311054, US2006243066, EP1719983, US2009145244, US2005150311

G01F 1/8431

{electronic circuits}

Definition statement

This place covers:

Illustrative example of subject matter classified in this group

Electronic circuits: US4311054, US4680974, US5069074, WO8707714

G01F 1/8436

{signal processing}

Definition statement

This place covers:

Illustrative example of subject matter classified in this group

Signal processing: e.g. details of neural networks, FFT, matrix operations, analogue and digital filtering: WO0049371, US4680974, WO8505677, US5555190

G01F 1/844

{micro-fluidic or miniaturised flowmeters}

Definition statement

This place covers:

Illustrative example of subject matter classified in this group

Micro-fluidic or miniaturised flow meters: US2005150311 (e.g. capillaries as flow metering tubes)

G01F 1/8445

{micro-machined flowmeters}

Definition statement

This place covers:

Illustrative example of subject matter classified in this group

Micro-machined flow meters: US2007151335 (applying chip technology)

G01F 1/845

{arrangements of measuring means, e.g., of measuring conduits}

Definition statement

This place covers:

Illustrative example of subject matter classified in this group

Arrangements of measuring means, e.g., of measuring conduits

G01F 1/8454

{rotating or rotatingly suspended measuring conduits}

Definition statement

This place covers:

Illustrative example of subject matter classified in this group

Rotating or rotatingly suspended measuring conduits: Revolving (continuously rotating) measuring pipe(s)/ flow path(s): (EP0424828, DE4125424) EP0424828:

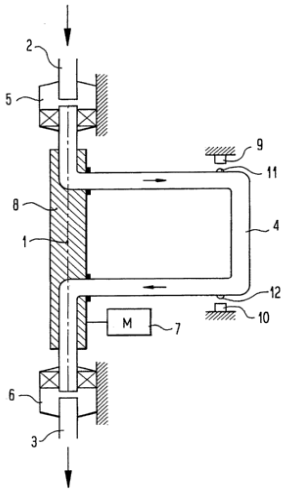

DE4125424:

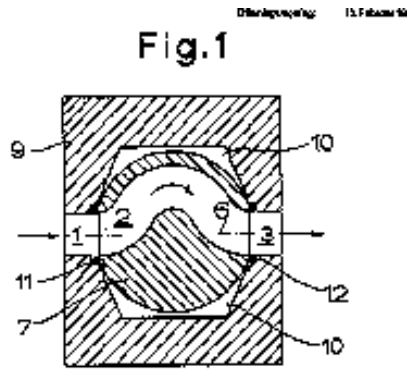

Rotating fluid guiding part DE20115010U; Oscillating tube being rotatingly suspended (tube connections allowing rotation): (BE681739, US3276257, US3485098); use of a gyroscope: BE681739:

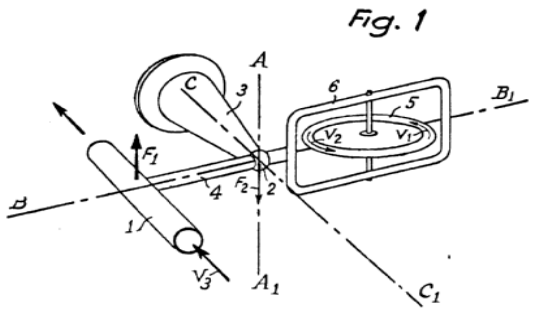

G01F 1/8459

{vibrating means being located inside the measuring conduits}

Definition statement

This place covers:

Illustrative example of subject matter classified in this group

Vibrating means being located inside the measuring conduits:

Vibrating elements in flow path: EP0867694:

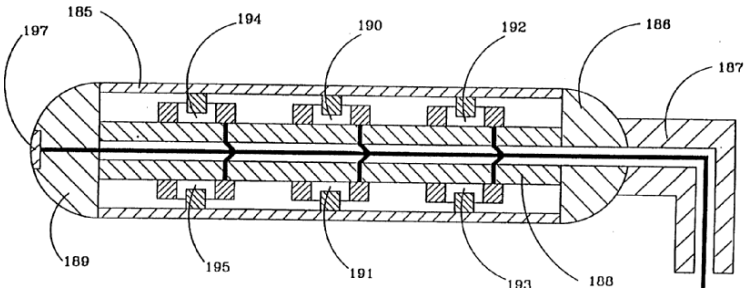

Vibrating metal strip in flow path: US4420983 (fig.11):

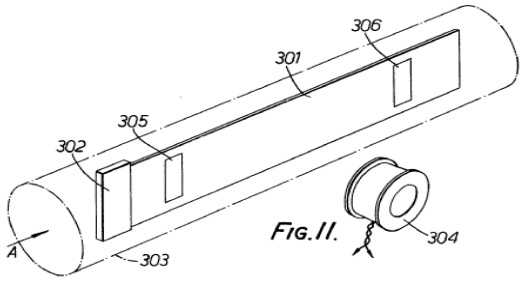

Vibrating cylinder in flow path: US4420983 (fig 1):

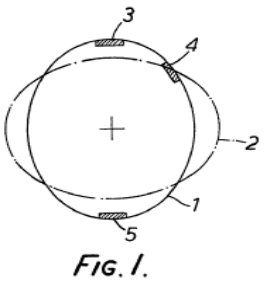

G01F 1/8463

{the measuring conduits' cross-section being deformed during measurement, e.g. by periodically deflecting a portion of the conduits' surface}

Definition statement

This place covers:

Illustrative example of subject matter classified in this group

The measuring conduits' cross-section being deformed during measurement, e.g. by periodically deflecting a portion of the conduits' surface:

JP6235652 (the cross-section is deformed by the action of the fluid)

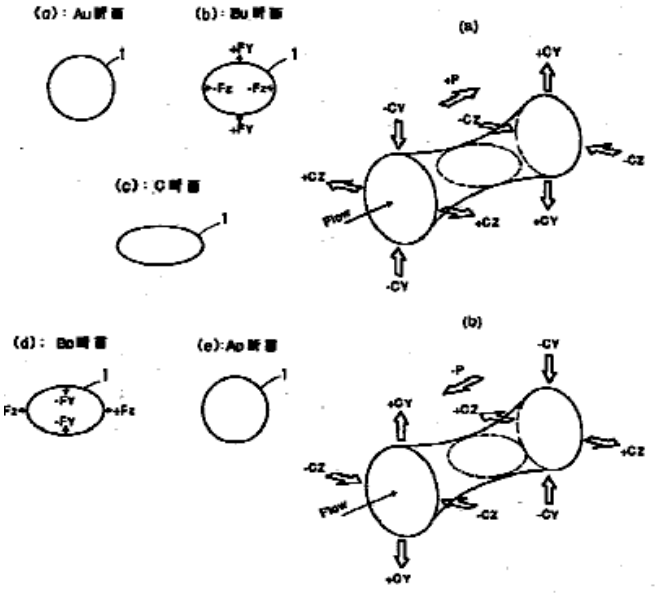

EP0316908 (phase difference between deflection of successive wall sections)

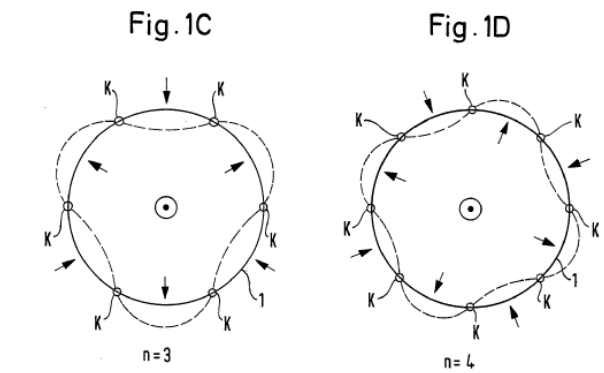

G01F 1/8468

{vibrating measuring conduits}

Definition statement

This place covers:

Illustrative example of subject matter classified in this group

Vibrating measuring conduits:

Pipes, flow paths not covered by the sub-classes: e.g. 3-dimensional flow tube configurations not being loops, e.g. US5184518, US4879910; or an out-of-plane bent flow tube (JP4081617) need to be classified under the subclass G01F 1/8468.

US5184518:

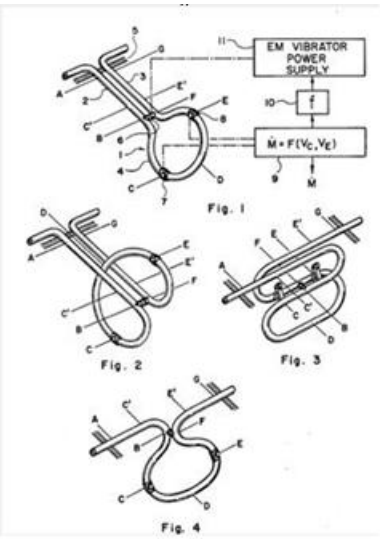

JP4081617:

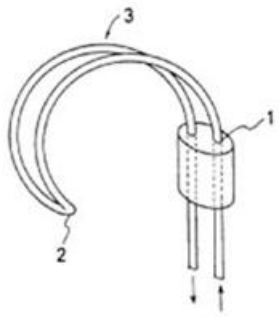

第 3 図

G01F 1/8472

{having curved measuring conduits, i.e. whereby the measuring conduits' curved center line lies within a plane (G01F 1/8481 takes precedence)}

Definition statement

This place covers:

Illustrative example of subject matter classified in this group

Having curved measuring conduits, i.e. whereby the measuring conduits' curved center line lies within a plane (G01F 1/8481 takes precedence):

Single S: WO8808517;

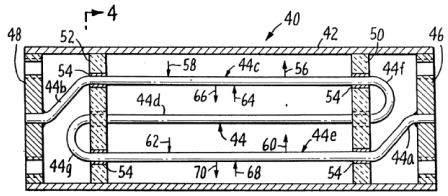

single V: US6484591;

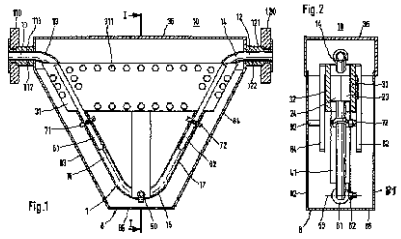

single U: GB2001759 (fig.9):

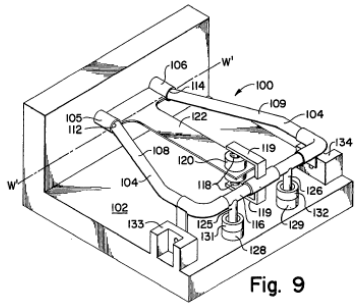

bent oscillating tube (on bearings)US3485098:

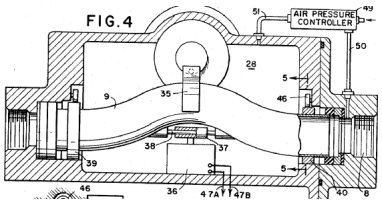

References

Limiting references

This place does not cover:

Having loop-shaped measuring conduits, e.g. the measuring conduits form a loop with a crossing point	G01F 1/8481

G01F 1/8477

{with multiple measuring conduits}

Definition statement

This place covers:

Illustrative example of subject matter classified in this group

with multiple curved measuring conduits: 2x triangle in parallel:

US5497666:

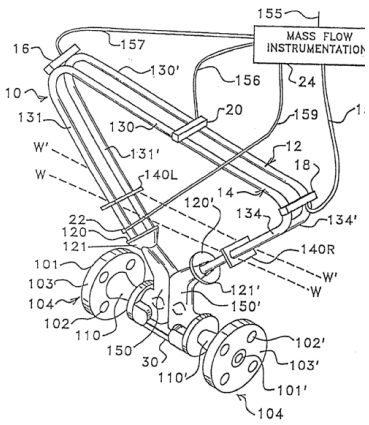

2xS in parallel: JP63314415

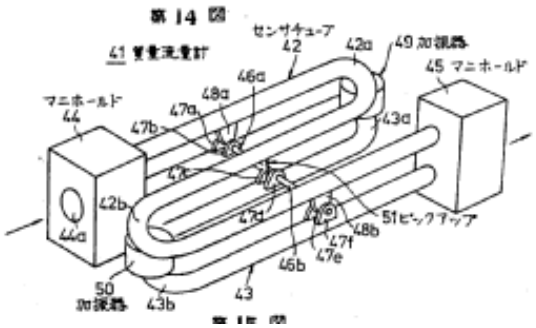

G01F 1/8481

{having loop-shaped measuring conduits, e.g. the measuring conduits form a loop with a crossing point}

Definition statement

This place covers:

Illustrative example of subject matter classified in this group

Having loop-shaped measuring conduits, e.g. the measuring conduits form a loop with a crossing point:

Single loop: US5069074

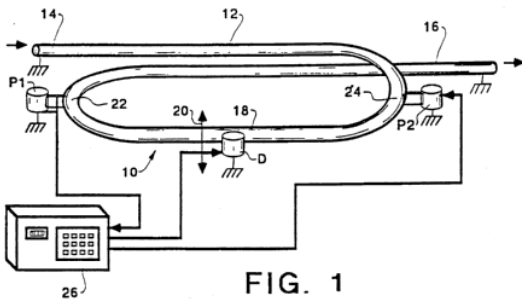

FIG. 1

WO8505677:

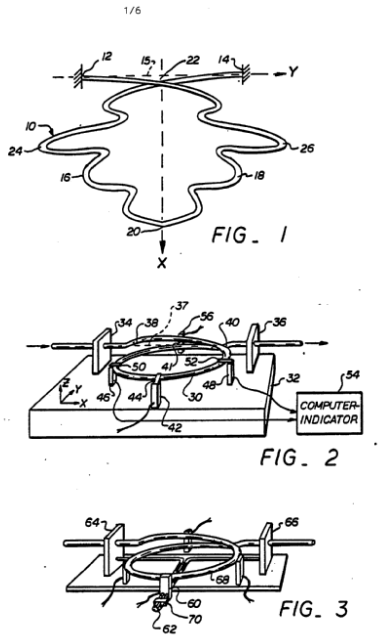

An almost closed omega, even if called a "loop" should be classified in G01F 1/8472 instead.

G01F 1/8486

{with multiple measuring conduits}

Definition statement

This place covers:

Illustrative example of subject matter classified in this group

with multiple loop-shaped measuring conduits:

two loops in parallel: WO8505677

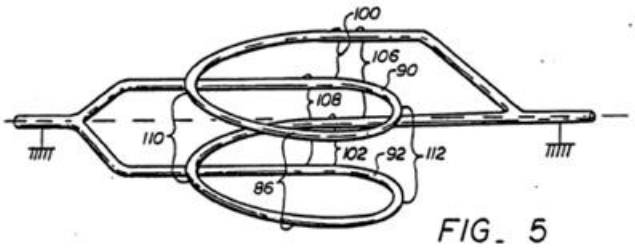

FIG. 5

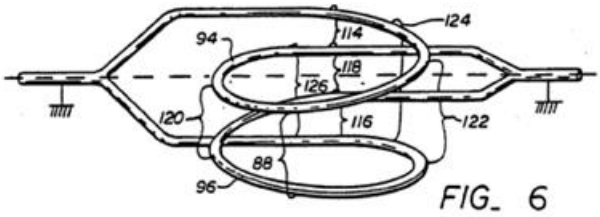

FIG. 6

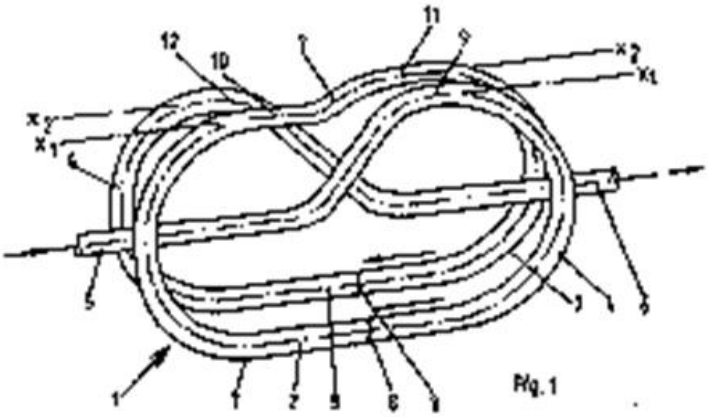

two loops in series: EP0271605:

G01F 1/849

{having straight measuring conduits}

Definition statement

This place covers:

Illustrative example of subject matter classified in this group

Having straight measuring conduits: single straight tube:

EP0775893:

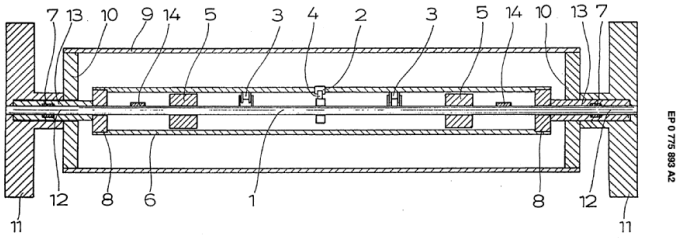

Fig. 1

US2002020228:

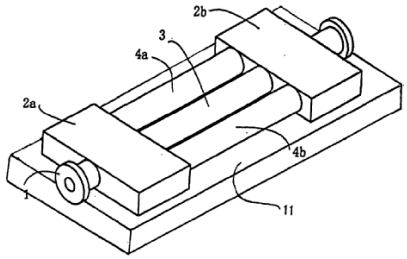

G01F 1/8495

{with multiple measuring conduits}

Definition statement

This place covers:

Illustrative example of subject matter classified in this group

with multiple measuring conduits:

Two straight tubes in parallel: WO8808517:

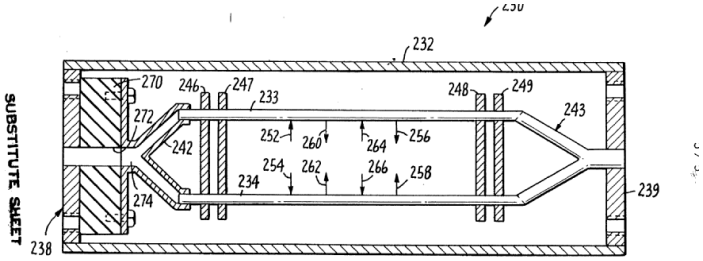

Two straight tubes in series: US7005019:

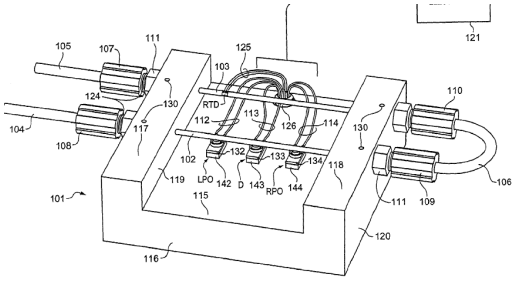

FIG. 1

G01F 3/00

Measuring the volume flow of fluids or fluent solid material wherein the fluid passes through the meter in successive and more or less isolated quantities, the meter being driven by the flow (measuring a proportion of the volume flow G01F 5/00)

Definition statement

This place covers:

Devices

- With measuring chambers which expand or contract during measurement;
- with measuring chambers moved during operation;
- with stationary measuring chambers having constant volume during measurement.

Wet gas-meters.

G01F 3/065

{sliding-vane meters}

Definition statement

This place covers:

Illustrative example of subject matter classified in this group

US3683694

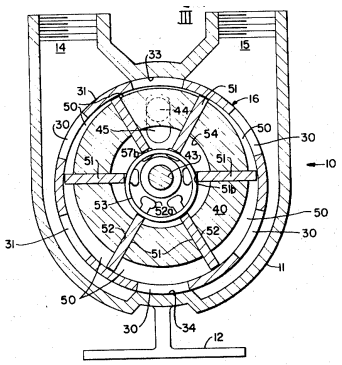

G01F 3/08

Rotary piston or ring piston meters

Definition statement

This place covers:

Illustrative example of subject matter classified in this group

US5495756

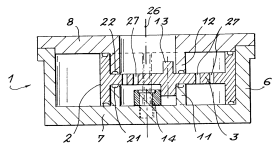

FIG. 3

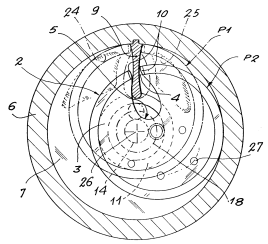

G01F 3/10

Geared or lobed impeller meters

Definition statement

This place covers:

Illustrative example of subject matter classified in this group

US2010307234

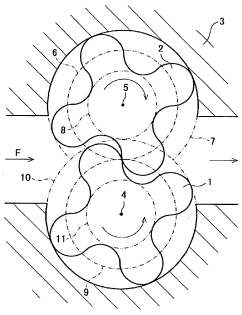

WO0014486

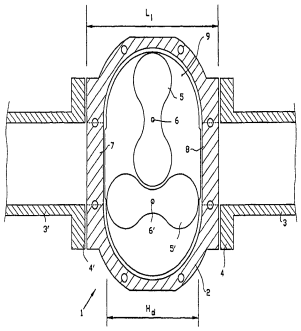

US4856427

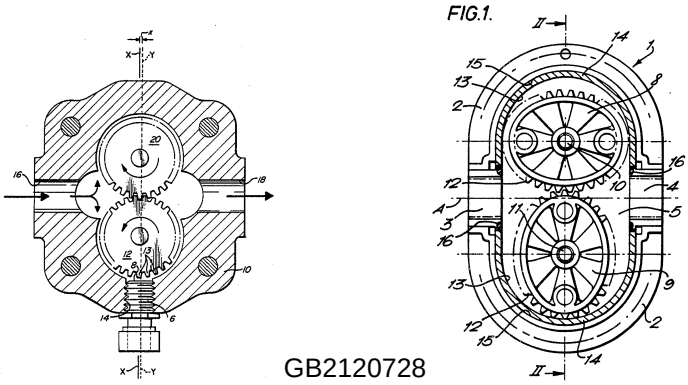

GB2120728

G01F 3/12

Meters with nutating members, e.g. discs

Definition statement

This place covers:

Illustrative example of subject matter classified in this group

US5824896

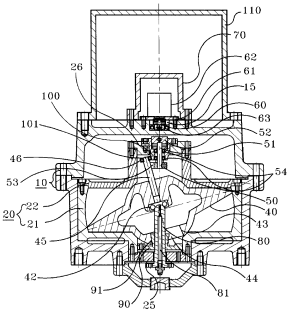

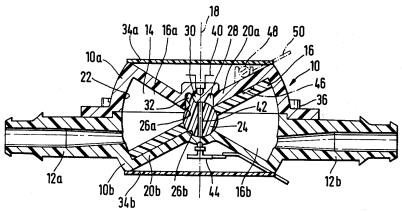

US4232550

G01F 3/16

in stationary cylinders

Definition statement

This place covers:

Illustrative example of subject matter classified in this group

US5193389

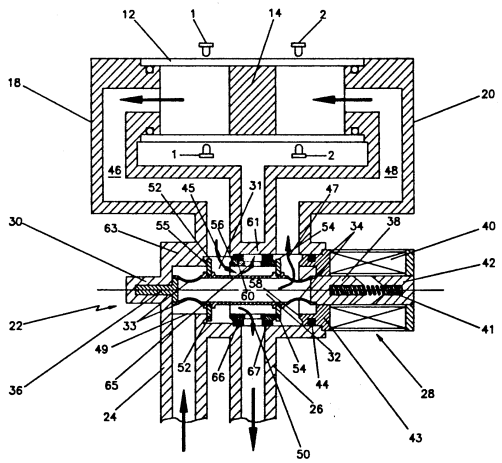

G01F 3/18

involving two or more cylinders

Definition statement

This place covers:

Illustrative example of subject matter classified in this group

GB1356762

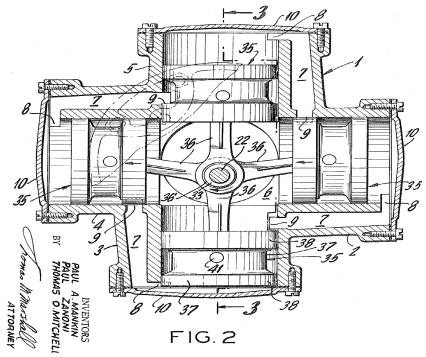

FIG. 2

G01F 3/26

Tilting-trap meters

Definition statement

This place covers:

Illustrative example of subject matter classified in this group

WO2007079942

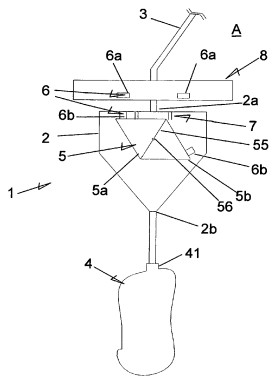

G01F 3/28

on carriers rotated by the weight of the liquid in the measuring chambers

Definition statement

This place covers:

Illustrative example of subject matter classified in this group

GB191220935

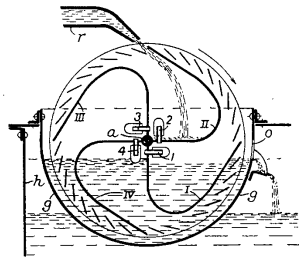

G01F 3/32

comprising partitioned drums rotating or nutating in a liquid

Definition statement

This place covers:

Illustrative example of subject matter classified in this group

GB2316491

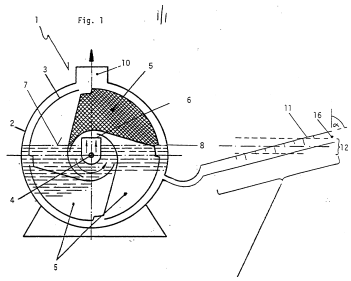

G01F 3/34

comprising bells reciprocating in a liquid

Definition statement

This place covers:

Illustrative example of subject matter classified in this group

DE31633

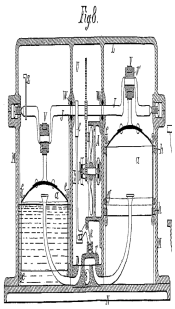

G01F 5/00

Measuring a proportion of the volume flow

Definition statement

This place covers:

- Flowmeters of any type measuring flow in a by-pass whereby the fluid is flowing simultaneously in both at least one main conduit and a by-pass. The total flow is derived from a known relationship between the section of the by-pass and the section of the main conduit.
- Details of by-passes including such flowmeters, e.g. their arrangement within or aside of the main conduit

References

Limiting references

This place does not cover:

Compound flowmeters whereby the fluid is flowing either in a by-pass or in a main conduit depending on the flow rate, in order to provide two or more measuring ranges	G01F 7/00

Informative references

Attention is drawn to the following places, which may be of interest for search:

Controlling ratio of two or more flows of fluid	G05D 11/02

Special rules of classification

Details of specific flowmeters classified in G01F 5/00 are also classified in the relevant sub-groups in G01F 1/00 and G01F 3/00.

Details of flowmeters of the pressure or differential pressure type classified in G01F 5/005 are also classified in the relevant groups G01F 1/34 - G01F 1/50

Synonyms and Keywords

In patent documents, the following words/expressions are often used as synonyms:

- "auxiliary, secondary, or sub-passage" and "by-pass"
- "primary passage" and "main passage"

G01F 7/00

Volume-flow measuring devices with two or more measuring ranges; Compound meters

References

Limiting references

This place does not cover:

Flowmeters adapted for low flow rates, e.g. where flow is allowed to pass through the flowmeter only when it can be measured by a flowmeter having a specific range	G01F 15/028

Special rules of classification

The following devices are classified in this group:

- Arrangement of at least two flowmeters each having a different range and operated only at their respective range, e.g. compound meters. Arrangement of flow conduits and valves designed to divert the flow to the meter with the proper range.
- Modification to flowmeters in order to increase their range, even when there is only a single flowmeter
- Flowmeters operated simultaneously but each covering a different range

Details of specific flowmeters are also classified in the relevant sub-groups in G01F 1/00 and G01F 3/00.

G01F 9/00

Measuring volume flow relative to another variable, e.g. of liquid fuel for an engine

Definition statement

This place covers:

Measuring volume flow relative to another variable

- with electric, electro-mechanic, electronic or mechanic means
- whereby the other variable is the flight or running time or the speed of a vehicle.

References

Informative references

Attention is drawn to the following places, which may be of interest for search:

Economical driving	B60R 16/0236
Testing fuel-injection apparatus	F02M 65/00
Testing of internal combustion engines	G01M 15/04

G01F 11/00

Apparatus requiring external operation and adapted at each repeated and indentical operation to measure and separate a predetermined volume of fluid or fluent solid material from a supply or container without regard to weight and to deliver it

Definition statement

This place covers:

Devices especially adapted for fluent solid material

Details or accessories

Devices operating

- with measuring chambers which expand or contract during measurement
- with measuring chambers moved during operation
- with stationary measuring chambers having constant volume during measurement

References

Limiting references

This place does not cover:

Forming a predetermined ratio of substances to be mixed by feeding the components in predetermined amounts	B01F 15/0441
Single-unit, i.e. unitary hand-held apparatuses with a pump	B05B 11/30
Bottling liquids with provision for metering the liquid to be introduced using dosing chambers	B67C 3/204
Apparatus for dispensing beverages on draught comprising means for automatically controlling the amount to be dispensed based on volumetric dosing	B67D 1/0007
Devices for dosing additives in the treatment of water, waste water, or sewage	C02F 1/685
Pumps specially modified to deliver fixed or variable measured quantities	F04B 13/00

Informative references

Attention is drawn to the following places, which may be of interest for search:

Dough-dividing machines with division boxes in a revolving body with radially-working pistons	A21C 5/04
Food containers dispensing a certain quantity of powdered or granulated foodstuffs, e.g. sugar	A47G 19/34
Beverage-making apparatus with dispensing means for adding a measured quantity of ingredients	A47J 31/40
Dispensers for liquid or pasty soap dispensing dosed volume	A47K 5/1202
Using squeeze bottles or the like for soap	A47K 5/122
Peristaltic pumps	F04B 43/12
Hand operated grease guns	F16N 3/02
Air operated grease guns	F16N 5/02

Special rules of classification

G01F 11/04 takes precedence over G01F 11/021.

G01F 19/005 takes precedence over G01F 11/025.

G01F 11/34, G01F 11/40 and G01F 11/46 takes precedence over G01F 11/282.

G01F 11/282 and G01F 11/30 - G01F 11/46 take precedence over G01F 11/284.

G01F 11/261

{for fluent solid material}

Definition statement

This place covers:

Illustrative example of subject matter classified in this group

WO2006123228

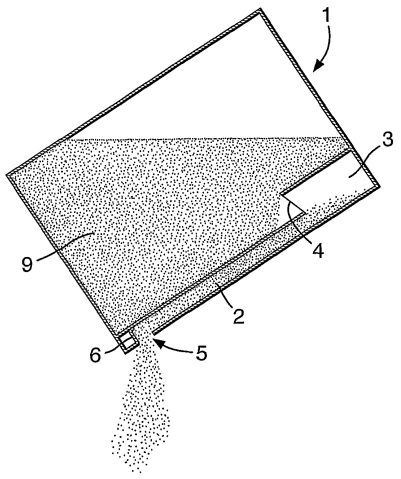

G01F 11/262

{for liquid or semi-liquid}

Definition statement

This place covers:

Illustrative example of subject matter classified in this group

US4893732

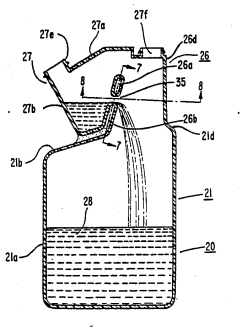

DE8624916U

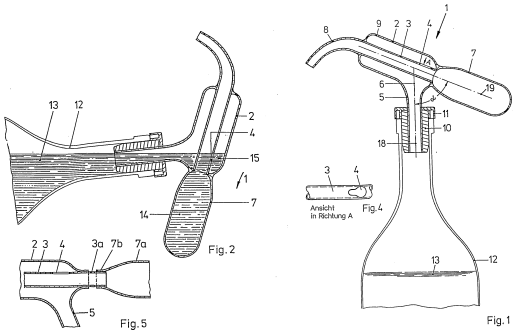

FR2590555

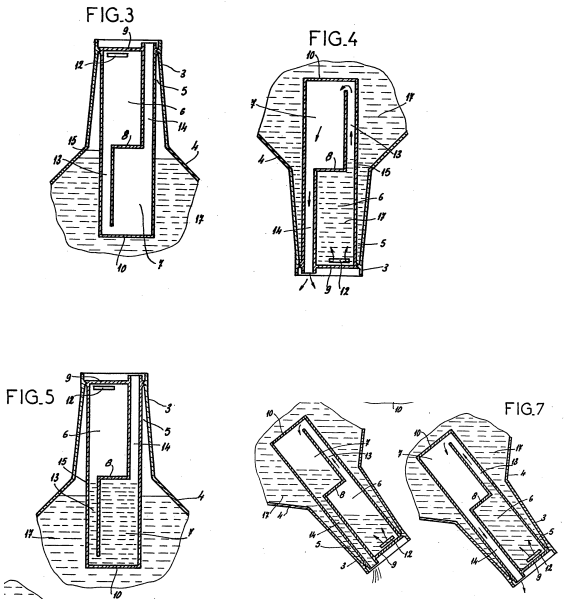

G01F 11/263

{with valves}

Definition statement

This place covers:

Illustrative example of subject matter classified in this group

US4778087

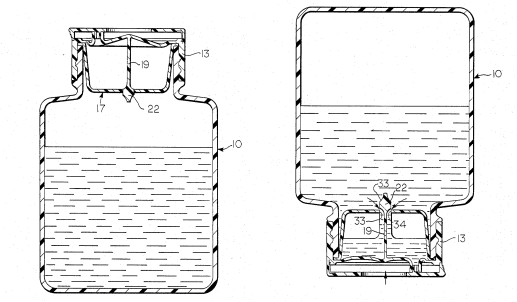

G01F 11/286

{where filling of the measuring chamber is effected by squeezing a supply container that is in fluid connection with the measuring chamber and excess fluid is sucked back from the measuring chamber during relaxation of the supply container}

Definition statement

This place covers:

Illustrative example of subject matter classified in this group

US5884816

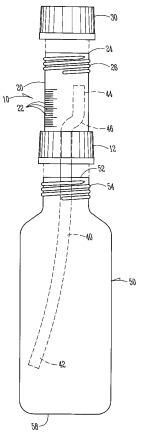

G01F 11/288

{squeezing of the supply vessel causing filling of the measuring chamber and backflow from the measuring chamber to the supply vessel being prevented by a check valve (G01F 11/46 take precedence)}

Definition statement

This place covers:

Illustrative example of subject matter classified in this group

US5127553

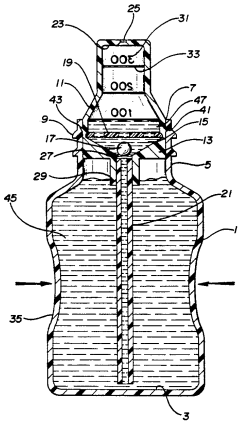

G01F 11/32

for liquid or semi-liquid

Definition statement

This place covers:

Illustrative example of subject matter classified in this group

US5601212

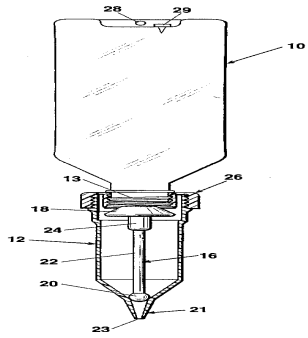

G01F 11/40

for fluent solid material

Definition statement

This place covers:

Illustrative example of subject matter classified in this group

US2008099509

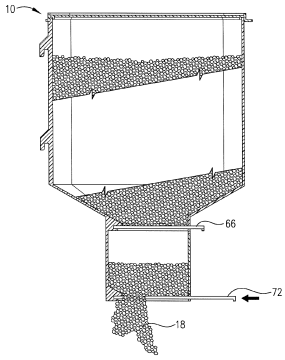

G01F 13/00

Apparatus for measuring by volume and delivering fluids or fluent solid materials, not provided for in the preceding groups

Definition statement

This place covers:

Apparatus for measuring by volume and delivering fluids or fluent solid materials, not provided for in the preceding groups

- for fluent solid material
- measuring volume in function of time

Taps comprising counting- and recording means

References

Limiting references

This place does not cover:

Apparatus for weighing a continuous stream of material	G01G 11/00
Control of flow	G05D 7/00

Informative references

Attention is drawn to the following places, which may be of interest for search:

Counting mechanisms	G06M

G01F 15/00

Details of, or accessories for, apparatus of the preceding groups insofar as such details or appliances are not adapted to particular types of such apparatus

Definition statement

This place covers:

Means for regulating or setting the meter for a predetermined quantity

Valves

Devices
- characterised by the use of a particular material, e.g. anti-corrosive material
- comprising means to prevent fraud
- comprising lubricating means

Means for compensating or correcting for variations in pressure, density or temperature

Indicating or recording devices, e.g. for remote indication

Air or gas separators in combination with liquid meters; Liquid separators in combination with gas meters

Means for preventing damage by freezing or excess pressure or insufficient pressure

Cleaning arrangements; Filters

Casings, e.g. of special material

Diaphragms; Bellows; Mountings therefor

Supports or connecting means for meters

References

Limiting references

This place does not cover:

Details of, or accessories of apparatuses	G01F 17/00, G01F 19/00, G01F 22/00, G01F 23/00

Informative references

Attention is drawn to the following places, which may be of interest for search:

Valves for diaphragm type gas meters	G01F 3/221
Diaphragm type gas meters characterized by constructional features of membranes	G01F 3/225
Details or accessories of dosing devices	G01F 11/006
Valves	G01F 15/005
Cleaning arrangements; Filters	G01F 15/12
Diaphragms; Bellows; Mountings therefor	G01F 15/16
Connecting means e.g. bypass conduits (not electrical connecting means)	G01F 15/185
Filters in general	B01D
Cleaning in general	B08B
Valves in general	F16K

Special rules of classification

G01F 15/14 takes precedence over G01F 15/006.

G01F 1/08 and G01F 1/12 take precedence over G01F 15/026.

G01F 15/063 takes precedence over G01F 15/068.

G01F 17/00

Methods or apparatus for determining the capacity of containers or cavities, or the volume of solid bodies (measuring linear dimensions to determine volume G01B)

Definition statement

This place covers:

Methods or apparatus for determining the capacity of containers or cavities, or the volume of solid bodies, including by measurement of pressure of gas

References

Limiting references

This place does not cover:

Methods or apparatuses for measuring volume of fluids or fluent solid material, not otherwise provided for, e.g. involving measurement of pressure	G01F 22/00, G01F 22/02
Measuring linear dimensions to determine volume	G01B

Informative references

Attention is drawn to the following places, which may be of interest for search:

Detecting, measuring or recording for diagnostic purposes: measuring volume of limbs, e.g. plethysmography	A61B 5/1073
Determining well or borehole volumes	E21B 47/0003
Sensing or measuring mail pieces	G07B 17/00661

G01F 19/00

Calibrated capacity measures for fluids or fluent solid material, e.g. measuring-cups {(powder measuring spoons A61J; burettes, weighing bottles B01L)}

Definition statement

This place covers:

- Measuring spoons or scoops
- Calibrated capacity measures adapted for semi-liquid, e.g. fat or non fluent solid material, e.g. filamentary

References

Informative references

Attention is drawn to the following places, which may be of interest for search:

Shop or like accessories: hand implements, e.g. grocers' scoops	A47F
Drinking vessels or saucers used for table service	A47G 19/22
Cooking spoons	A47J 43/281
Spoons for serving ice-cream	A47J 43/282
Devices for administering medicines orally, e.g. spoons	A61J 7/00

Burettes, weighing bottles	B01L
Weighing apparatus combined with handles of tools or household implements	G01G 19/56

G01F 19/002

{Measuring spoons or scoops}

Definition statement

This place covers:

Illustrative example of subject matter classified in this group

US6125699

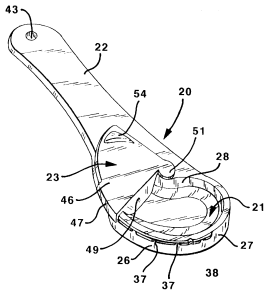

US5347865

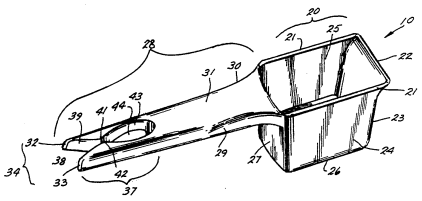

G01F 19/005

{for semi-liquid, e.g. fat}

Definition statement

This place covers:

Illustrative example of subject matter classified in this group

US2645127

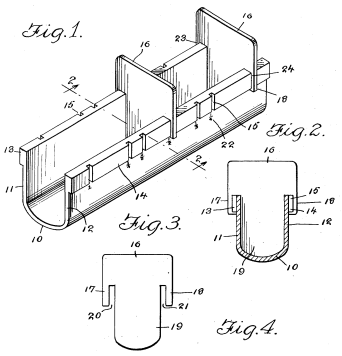

G01F 19/007

{for non fluent solid material, e.g. filamentary}

Definition statement

This place covers:

Illustrative example of subject matter classified in this group

US5255439

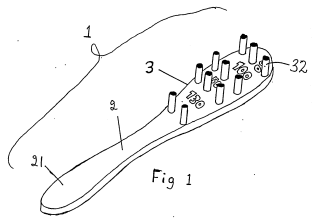

US4165565

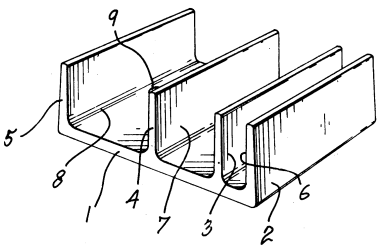

US4120094

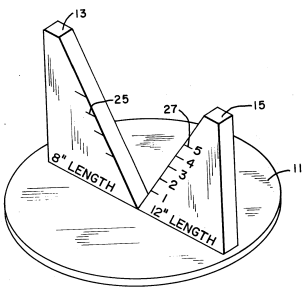

G01F 22/00

Methods or apparatus for measuring volume of fluids or fluent solid material, not otherwise provided for

Definition statement

This place covers:

Methods or apparatus for measuring volume of fluids or fluent solid material, not otherwise provided for, e.g. involving measurement of pressure

References

Limiting references

This place does not cover:

Indicating or measuring liquid level by measurement of pressure of the liquid	G01F 23/14

Informative references

Attention is drawn to the following places, which may be of interest for search:

Methods or apparatus for determining the capacity of containers or cavities, or the volume of solid bodies	G01F 17/00

Special rules of classification

Group G01F 22/02 contains apparatuses and methods whereby in order to determine the volume of fluids or fluid solid material in a container, the pressure of the gas above the fluid in the container is measured in order to determine the volume occupied by the gas and deduct the volume occupied by the fluid from this measurement and the known volume of the container.

G01F 23/00

Indicating or measuring liquid level, or level of fluent solid material, e.g. indicating in terms of volume, indicating by means of an alarm (in wells E21B 47/04; adaptation to, or mounting on, steam boilers F22B 37/78; level regulation G05D; alarm devices G08B; {for accumulators H01M 10/48})

Definition statement

This place covers:

Devices

- for discrete indicating and measuring
- with a probe suspended by a wire or thread
- with a probe suspended by rotatable arms
- using buoyant probes
- with a stationary probe, where a liquid specimen is separated from the mean mass and measured
- with over-flow pipes
- characterised by the level signal processing means

Devices whereby the level is determined

- by gauge glasses or other apparatus involving a window or transparent tube for directly observing the level to be measured or the level of a liquid column in free communication with the main body of the liquid
- by dip members, e.g. dip-sticks
- by measurement of pressure
- by measurement of weight, e.g. to determine the level of stored liquefied gas
- by measurement of physical variables, other than linear dimensions, pressure or weight, dependent on the level to be measured, e.g. by difference of heat transfer of steam or water
- by floats

Level indicators mostly detecting and interface between liquid or fluent solid material and a gas above, but also interfaces between different phases, e.g. immiscible liquids superposed in a container.

References

Informative references

Attention is drawn to the following places, which may be of interest for search:

Monitoring infusion flow anomalies by detecting the amount of infusate remaining	A61M 5/1684
Regulation of liquid level in devices for separation of solid particles from liquid by sedimentation	B01D 21/34
Arrangement of indicating or measuring devices for the level of molten metal	B22D 2/003
In continuous casting of metals, controlling or regulating processes or operations for pouring responsive of molten or slag level	B22D 11/181
In continuous casting of metals, controlling or regulating processes or operations for removing cast stock responsive of molten or slag level	B22D 11/201
Water level measuring or regulating devices in washing machines	D06F 39/087
Measuring or locating liquid level in wells	E21B 47/042
Adaptations to, or mountings on steam boilers of level indicators	F22B 37/78
Measuring depth of open water, e.g. sea, lake, river, canal	G01C 13/008
Level control	G05D 9/00
Level alarms responsive to moisture	G08B 21/20
Switches operated by float	H01H 35/18
Switches actuated by a float carrying a magnet	H01H 36/02
Accumulators combined with arrangements for measuring electrolyte level	H01M 10/484
Support or mounting means for aerials used in level-measurement devices	H01Q 1/225

Special rules of classification

G01F 23/02 - G01F 23/28 take precedence over G01F 23/0007.

G01F 23/40 takes precedence over G01F 23/0023.

G01F 23/32 takes precedence over G01F 23/003.

G01F 23/30 - G01F 23/76 take precedence over G01F 23/0038.

G01F 23/02 takes precedence over G01F 23/0046.

In group G01F 23/0038 buoyant probes normally occupy a large height in a container and don't move. The force exerted by the liquid on them is detected to determine the level.

G01F 23/0061 includes for example electrical circuits for treating the signal, for example filtering or averaging signals to compensate for sloshing, treating multiple level signals, transmitting the measured level signal, power saving circuits.

G01F 23/0076 and G01F 23/0092 can for example be used for inclination signals in order to compensate the level signal.

Group G01F 23/303 contains mainly mechanical arrangements around the float to prevent errors due to sloshing. Electronic circuits for compensating for sloshing should be classified in G01F 23/303 only if associated with a measurement using a float and should always be classified in G01F 23/0061 or sub groups.

G01F 25/00

Testing or calibrating apparatus for measuring volume, volume flow or liquid level, or for metering by volume

References

Limiting references

This place does not cover:

Adjusting, correcting or compensating means for flowmeters using rotating vanes with tangential admission	G01F 1/08
Adjusting, correcting or compensating means for flowmeters using rotating vanes with axial admission	G01F 1/12
Correcting or compensating means for flowmeters of the pressure or differential pressure type	G01F 1/50
Compensating or correcting for variations in velocity of sound in ultrasonic flowmeters	G01F 1/668
Thermal flowmeters comprising means to store calibration data for flow signal calculation or correction	G01F 1/6965

Informative references

Attention is drawn to the following places, which may be of interest for search:

Testing or calibrating of devices for controlling, indicating, metering or registering quantity or price of liquid transferred by devices for transferring liquid from bulk storage containers into vehicles or into portable containers	B67D 7/085
Testing or calibrating devices for speedometers for measuring speed of fluids or speed of bodies relative to fluids	G01P 21/025

Special rules of classification

G01F 25/0015 - G01F 25/0046 take precedence over G01F 25/0053