F21V

DETAILS OF LIGHTING DEVICES, OF GENERAL APPLICATION

Definition statement

This place covers:

Details of parts involved in light emission or distribution

Details of those parts not involved in light emission or distribution, e.g. fittings

Special adaptation related to the use of a non-electric light sources

References

Limiting references

This place does not cover:

Details of light guides adapted for lighting devices or systems	G02B 6/0001

Special rules of classification

¨Invention information" is identified with ECLA symbols, whereas "additional information" is identified with Indexing Code symbols

F21V 1/04

rigid (F21V 1/08 takes precedence)

References

Limiting references

This place does not cover:

Adjustable frame of a shade for light source	F21V 1/08

F21V 1/06

foldable or collapsible

References

Informative references

Attention is drawn to the following places, which may be of interest for search:

Fastening of component parts of lighting devices, e.g. shades, globes, refractors, reflectors, filters, screens, grids or protective cages, with provision for shipment or storage	F21V 17/007

F21V 1/08

adjustable

References

Informative references

Attention is drawn to the following places, which may be of interest for search:

Changing the characteristics or distribution of the light emitted by adjustment of parts	F21V 14/00

F21V 1/10

Rotating shades

Definition statement

This place covers:

Illustrative example of subject matter classified in this group.

Example: US1972687

Rotating glass cover or globe or shade or fins due to heat of a light source

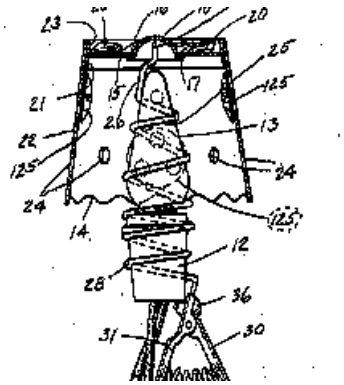

F21V 1/14

Covers for frames; Frameless shades

Definition statement

This place covers:

Shades characterised by the material

Stretched fly attached to a ceiling frame

Example: FR2952087

A stretched fly attached to a ceiling frame

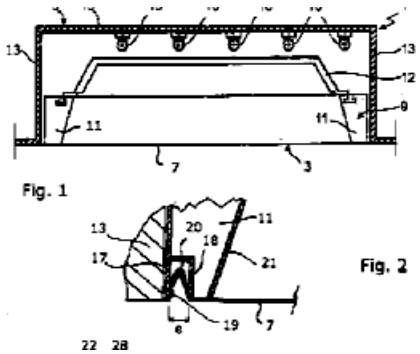

F21V 3/00

Globes; Bowls; Cover glasses (with refracting properties F21V 5/00; with reflecting properties F21V 7/00; characterised by cooling arrangements F21V 29/506)

Definition statement

This place covers:

Globes for street lighting devices

Glass cover for automotive vehicles

Globes, bowls, cover glasses characterised by their shapes

Globes, bowls, cover glasses characterised by material, coatings or surface treatments

References

Limiting references

This place does not cover:

With refracting properties	F21V 5/00
With reflecting properties	F21V 7/00

Informative references

Attention is drawn to the following places, which may be of interest for search:

Transparent cover plates for vehicle headlamps and rear lamps	F21S 48/12, F21S 48/22

F21V 5/00

Refractors for light sources (characterised by cooling arrangements F21V 29/504)

References

Informative references

Attention is drawn to the following places, which may be of interest for search:

Combinations of only two kinds of elements being reflectors and refractors	F21V 13/04
Combinations of only three kinds of elements being reflectors, refractors, and filters	F21V 13/14
Changing the characteristics or distribution of the light emitted by adjustment of parts by movement of refractors	F21V 14/06
Producing optical elements, e.g. lenses, prisms (grinding or polishing of optical elements B24B; constructional form of optical elements G02B; optical parts of spectacles G02C 7/00)	B29D 11/00
Details of kinds concerned with light emission or distribution solely applicable to the electric portable lighting devices	F21L 15/02
Refractors for vehicle headlamps and rear lamps	F21S 48/12, F21S 48/22
Optical elements	G02B

F21V 5/007

{Array of lenses or refractors for a cluster of light sources, e.g. for arrangement of multiple light sources in one plane (combination of two or more refractors F21V 5/008)}

References

Informative references

Attention is drawn to the following places, which may be of interest for search:

Simple or compound lenses; Arrays	G02B 3/0006

F21V 5/02

of prismatic shape (F21V 5/04 takes precedence)

References

Limiting references

This place does not cover:

Refractor of lens shape	F21V 5/04

F21V 5/04

of lens shape

References

Informative references

Attention is drawn to the following places, which may be of interest for search:

Simple or compound lenses	G02B 3/00, **G02B17/09F**
Optical system adapting the beam shape of a semiconductor light source such as a laser diode or an LED, e.g. for efficiently coupling into optical fibres	**G02B17/09F**

F21V 5/045

{the lens having discontinuous faces, e.g. Fresnel lenses}

References

Informative references

Attention is drawn to the following places, which may be of interest for search:

Simple or compound lenses with non-spherical faces with discontinuous faces, e.g. Fresnel lens	G02B 3/08

F21V 5/046

{the lens having a rotationally symmetrical shape about an axis for transmitting light in a direction mainly perpendicular to this axis, e.g. ring or annular lens with light source disposed inside the ring}

Definition statement

This place covers:

Illustrative example of subject matter classified in this group.

Example: WO0186198

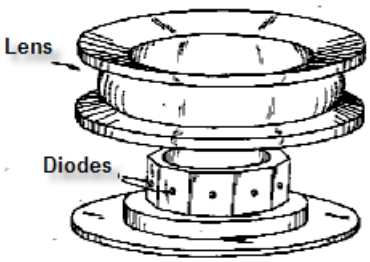

F21V 5/048

{the lens being a simple lens adapted to cooperate with a point-like source for emitting mainly in one direction and having an axis coincident with the main light transmission direction, e.g. convergent or divergent lenses, plano-concave or plano-convex lenses}

Definition statement

This place covers:

Illustrative example of subject matter classified in this group.

Ex.: WO2007045242

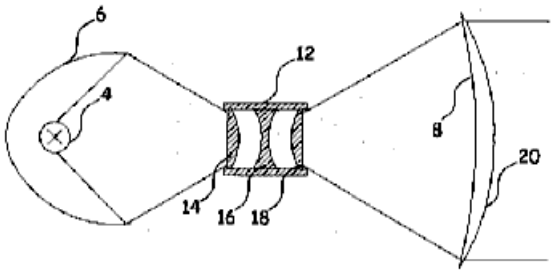

F21V 5/08

producing an asymmetric light distribution

Definition statement

This place covers:

Illustrative example of subject matter classified in this group.

Ex.: US2009225551

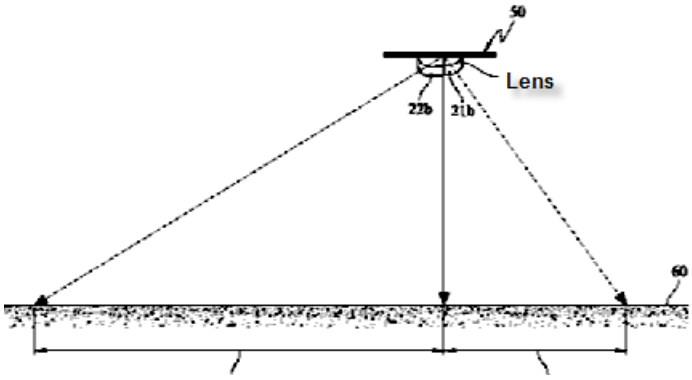

F21V 7/00

Reflectors for light sources (characterised by cooling arrangements F21V 29/505)

References

Informative references

Attention is drawn to the following places, which may be of interest for search:

Combinations of two kinds of elements one being of reflector and on of the following: refractor, filter or screen	F21V 13/04, F21V 13/08, **F21V14/10**
Combinations of three kinds of elements being reflectors, refractors, and filters	F21V 13/14
Changing the characteristics or distribution of the light emitted by adjustment of parts by movement of reflectors	F21V 14/04
Details of kinds concerned with light emission or distribution solely applicable to the electric portable lighting devices	F21L 15/02
Reflectors for vehicle headlamps or rear lamps	F21S 48/13, F21S 48/23
Optical elements other than lenses: Mirrors	G02B 5/08
System with reflecting surfaces using mirrors only, for light condensing, e.g. for use with a light emitter	G02B 17/0668
Systems with reflecting surfaces, with or without refracting elements for light condensing, e.g. for use with a light emitter	G02B 17/0868
Projectors or projection-type viewers: Reflectors in projection beam	G03B 21/28

F21V 7/0008

{providing for indirect lighting}

Definition statement

This place covers:

The lighting devices emitting light towards the ceiling and not toward the surface of interest to be lit

Lighting devices, the light beams of which are not being directed directly toward the aim, e.g. by means of reflectors

Illustrative example of subject matter classified in this group.

Example: US3671735

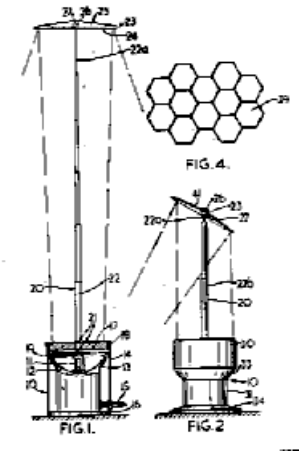

Example: US2744192

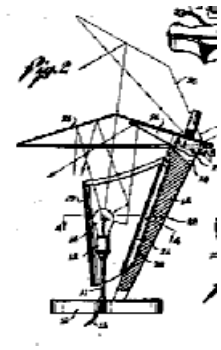

F21V 7/0025

{Combination of two or more reflectors for a single light source (array of reflectors for a cluster of light sources F21V 7/0083)}

Definition statement

This place covers:

Illustrative example of subject matter classified in this group.

US1300202

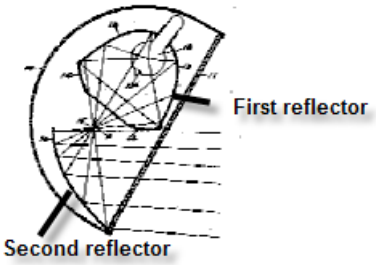

US1286535

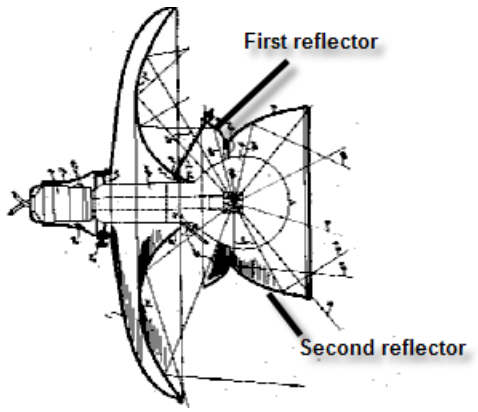

References

Limiting references

This place does not cover:

Array of reflectors for a cluster of light sources	F21V 7/0083

F21V 7/005

{with an elongated shape to cooperate with linear light sources}

Definition statement

This place covers:

Elongated reflective surface with its axis parallel to the axis of an elongated light emitter.

Plurality of reflective surfaces along an axis parallel to the axis of one elongated light emitter.

References

Limiting references

This place does not cover:

Plurality of reflective surfaces along an axis parallel to the axis of an light source formed of a plurality of light emitters, each light emitter corresponding to an individual reflective surface, i.e. array of light sources	F21V 7/0083

Special rules of classification

In this group, it is desirable to add the Indexing Codes of F21Y 2103/00

F21V 7/0058

{adapted to cooperate with light sources of shapes different from point-like or linear, e.g. circular light sources}

Special rules of classification

In this group, it is desirable to add the Indexing Codes of F21Y 2103/30

F21V 7/0066

{specially adapted to co operate with point like light sources; specially adapted to co operate with light sources the shape of which is unspecified (F21V 7/16 - F21V 7/22 take precedence)}

References

Limiting references

This place does not cover:

Construction of reflector with provision for adjusting the curvature	F21V 7/16
Construction of reflector with provision for folding or collapsing	F21V 7/18
Reflector characterised by the material; characterised by surface treatments or coatings	F21V 7/22
Reflector constructed to facilitate cooling	F21V 29/505

F21V 7/0083

{Array of reflectors for a cluster of light sources, e.g. arrangement of multiple light sources in one plane (combination of two or more reflectors F21V 7/0025)}

Definition statement

This place covers:

Illustrative example of subject matter classified in this group.

e.g.US2010328938: Plurality of individually removable identical reflectors on a planar matrix of LEDs

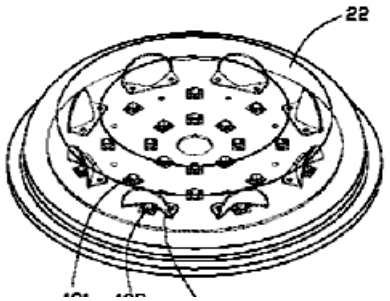

References

Informative references

Attention is drawn to the following places, which may be of interest for search:

Combination of two or more reflectors for a single light source	F21V 7/0025

F21V 7/0091

{using total internal reflection}

Definition statement

This place covers:

Reflectors for rear vehicle light using total internal reflection.

Refractors having surfaces used for total internal reflection.

References

Limiting references

This place does not cover:

Reflectors for vehicle headlamps using total internal reflection	F21S 48/1329

Informative references

Attention is drawn to the following places, which may be of interest for search:

Systems with reflecting surfaces, with or without refracting elements; Catadioptric systems for use with light emitter	G02B 17/0868

Special rules of classification

Reflectors for signal lamps for vehicles using total internal reflection have to be also classified in F21S 48/236

Refractors having surfaces used for total internal reflection have to be also classified in F21V 5/00

F21V 7/04

Optical design

Definition statement

This place covers:

Reflector for which the surface is defined by mathematical formulae.

F21V 7/09

with a combination of different curvatures

Definition statement

This place covers:

Also reflector surfaces with asperities

F21V 7/18

with provision for folding or collapsing

Definition statement

This place covers:

Illustrative examples of subject matter classified in this group.

e.g.DE202004011140U

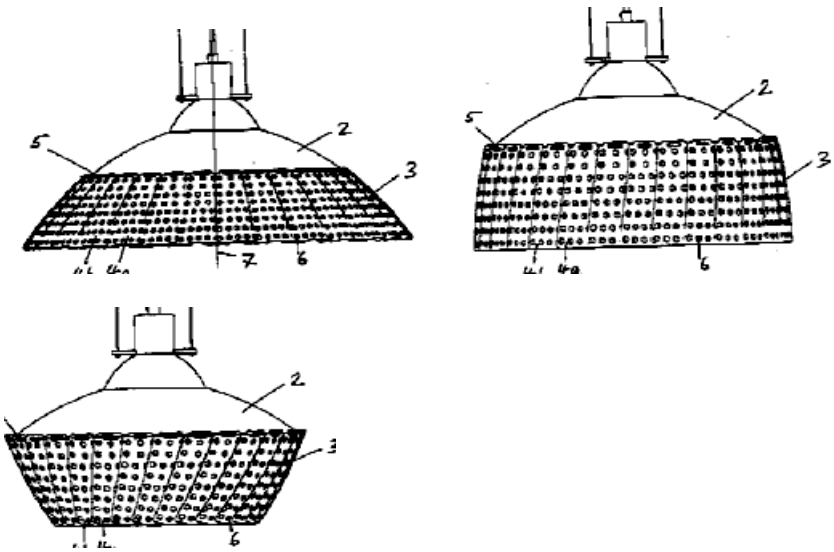

F21V 7/22

characterised by the material; characterised by surface treatments or coatings

References

Informative references

Attention is drawn to the following places, which may be of interest for search:

Surface treatment of glass, at least one coating being a metal	C03C 17/36
Multilayer mirrors	G02B 5/0816

F21V 9/00

Light filters (coloured shades F21V 1/00; characterised by cooling arrangements F21V 29/502); Selection of luminescent materials for light screens

References

Limiting references

This place does not cover:

Coloured shades	F21V 1/00

Informative references

Attention is drawn to the following places, which may be of interest for search:

Combination of only two kinds of elements being reflectors and filters	F21V 13/08
Combination of only three kinds of elements being reflectors, refractors and filters	F21V 13/14
Changing the characteristics or distribution of the light emitted by adjustment of parts by movement of screens	F21V 14/08
Luminescent materials per se	C09K 11/00
Details of kinds concerned with light emission or distribution solely applicable to the electric portable lighting devices; Arrangements of coloured filters or screens	F21L 15/04
Filters for vehicle headlamps or rear lamps	F21S 48/12, F21S 48/22

F21V 9/02

for simulating daylight (F21V 9/04, F21V 9/06, F21V 9/16 take precedence)

Definition statement

This place covers:

False windows are also covered by this subgroup

References

Limiting references

This place does not cover:

Light filters for filtering out infra-red radiatio	F21V 9/04
Light filters for filtering out ultra-violet radiation	F21V 9/06
Light filters; Selection of luminescent materials for screens	F21V 9/16

F21V 9/04

for filtering out infra-red radiation (using liquid-filled chambers F21V 9/12)

References

Informative references

Attention is drawn to the following places, which may be of interest for search:

Light filters for producing coloured light with liquid-filled chambers	F21V 9/12

F21V 9/06

for filtering out ultra-violet radiation (F21V 9/16 takes precedence)

References

Limiting references

This place does not cover:

Light filters; Selection of luminescent materials for screens	F21V 9/16

F21V 9/08

for producing coloured light, e.g. monochromatic; for reducing intensity of light (F21V 9/16 takes precedence)

References

Limiting references

This place does not cover:

Light filters; Selection of luminescent materials for screens	F21V 9/16

Informative references

Attention is drawn to the following places, which may be of interest for search:

Radiation therapy using light characterised by the wavelength of light used; Coloured visible light	A61N 2005/0663

F21V 9/10

with provision for variation of the colour or intensity (F21V 9/12 takes precedence)

References

Limiting references

This place does not cover:

Light filters for producing coloured light with liquid-filled chambers	F21V 9/12

F21V 11/00

Screens not covered by groups F21V 1/00, F21V 3/00, F21V 7/00 or F21V 9/00 (characterised by cooling arrangements F21V 29/502)

References

Informative references

Attention is drawn to the following places, which may be of interest for search:

Combination of only two kinds of elements being reflectors and screens	F21V 13/10

Changing the characteristics or distribution of the light emitted by adjustment of parts by movement of screens	F21V 14/08
Screens, light shielding members for vehicle headlamps	F21S 48/14

F21V 11/02

using parallel laminae or strips, e.g. of Venetian-blind type (F21V 11/06 takes precedence)

Definition statement

This place covers:

Illustrative example of subject matter classified in this group.

e.g.US2010142197

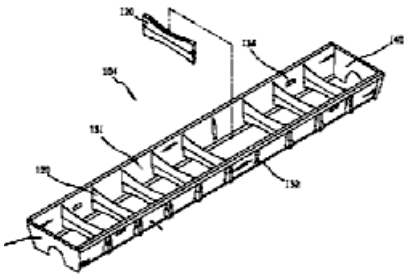

References

Limiting references

This place does not cover:

Screens using crossed laminae or strips	F21V 11/06

F21V 11/04

adjustable

Definition statement

This place covers:

Adjustable lamellae

Illustrative example of subject matter classified in this group.

e.g.DE9420171U

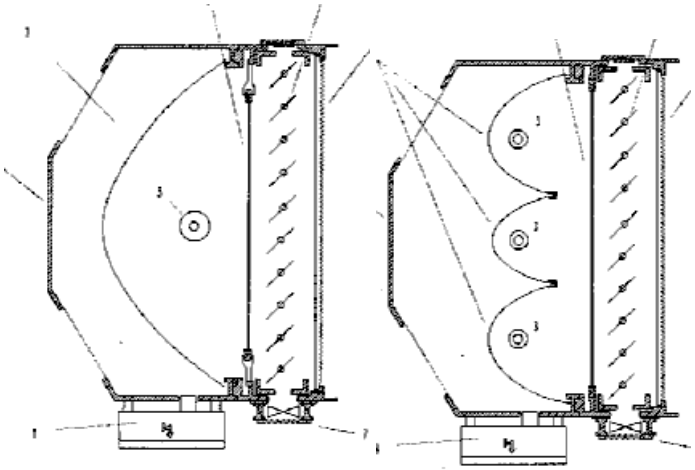

References

Informative references

Attention is drawn to the following places, which may be of interest for search:

Changing the characteristics or distribution of the light by movement of screens	F21V 14/08

F21V 11/06

using crossed laminae or strips, {e.g. grid-shaped louvers}; using lattices or honeycombs

Definition statement

This place covers:

Illustrative example of subject matter classified in this group.

e.g.WO2010007504

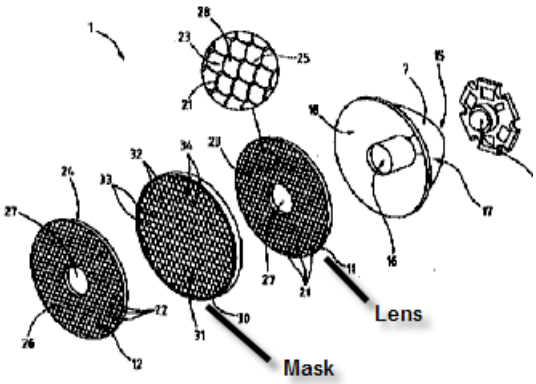

F21V 11/14

with many small apertures

Definition statement

This place covers:

Illustrative example of subject matter classified in this group.

e.g. US7588345

Polymeric light control film with holes on an elongated light source

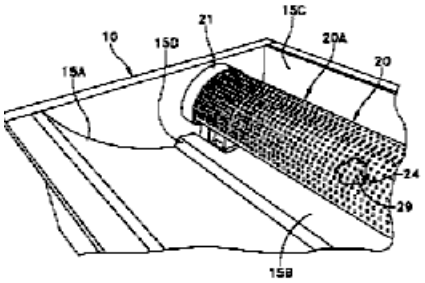

F21V 11/16

using sheets without apertures, e.g. fixed

References

Limiting references

This place does not cover:

Screens using parallel laminae or strips	F21V 11/02
Screens using crossed laminae or strips	F21V 11/06

F21V 11/18

movable, e.g. flaps, slides

Definition statement

This place covers:

Illustrative example of subject matter classified in this group.

e.g.WO2009096472

Light-shielding plates for stage projectors

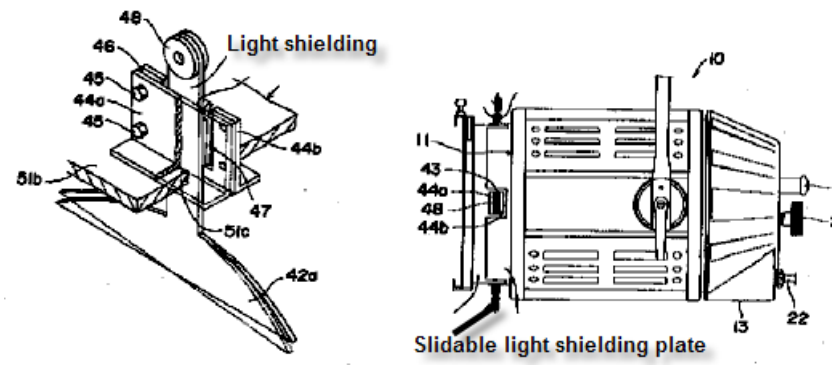

F21V 13/00

Producing particular characteristics or distribution of the light emitted by means of a combination of elements specified in two or more of main groups F21V 1/00 F21V 11/00 (by means of a combination of two or more elements covered by a single one of main groups F21V 1/00 F21V 11/00, see the relevant group; changing the characteristics or distribution of the light emitted by adjustment of parts F21V 14/00)

References

Informative references

Attention is drawn to the following places, which may be of interest for search:

By means of a combination of two or more elements covered by a single one of main groups F21V 1/00- F21V 11/00	F21V 1/00 - F21V 11/00
Changing the characteristics or distribution of the light emitted by adjustment of parts	F21V 14/00
Details of kinds concerned with light emission or distribution solely applicable to the electric portable lighting devices	F21L 15/02
By means of a combination of reflectors and refractors for vehicle rear lamps	F21S 48/24

F21V 13/02

Combinations of only two kinds of elements

References

Informative references

Attention is drawn to the following places, which may be of interest for search:

Systems with reflecting surfaces, with or without refracting elements for light condensing, e.g. for use with a light emitter	G02B 17/0868

F21V 13/14

the elements being reflectors, refractors, and filters

Definition statement

This place covers:

Illustrative example of subject matter classified in this group.

e.g.DE550107C

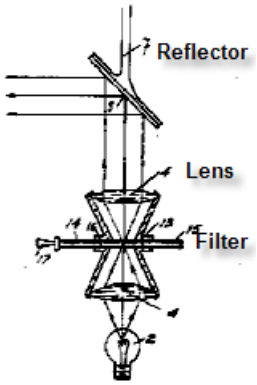

F21V 14/00

Changing the characteristics or distribution of the light emitted by adjustment of parts {or by interposition of elements with electrically controlled variable light transmissivity} (reflectors with provision for adjusting the curvature F21V 7/16; light filters with provision for variation of colour or intensity F21V 9/10; screens using adjustable parallel laminae or strips, e.g. of Venetian-blind type, F21V 11/04; screens using iris-type diaphragms F21V 11/10; screens using movable sheets without apertures, e.g. flaps or slides, F21V 11/18; adjustable mountings for lighting devices F21V 21/14)

References

Limiting references

This place does not cover:

Reflectors with provision for adjusting the curvature	F21V 7/16
Light filters with provision for variation of colour or intensity	F21V 9/10
Screens using adjustable parallel laminae or strips, e.g. of Venetian-blind type	F21V 11/04
Screens using iris-type diaphragms	F21V 11/10
Screens using movable sheets without apertures, e.g. flaps or slides	F21V 11/18
Adjustable mountings for lighting devices	F21V 21/14

Informative references

Attention is drawn to the following places, which may be of interest for search:

Details regarding the mechanism for the adjustment of components of the lighting device	F21V 17/02
Details regarding the mechanism for the adjustment of the lamp holder or the light source	F21V 19/02
Adjustable vehicle headlamp housing	B60Q 1/06
Details of kinds concerned with light emission or distribution solely applicable to the electric portable lighting devices	F21L 15/02

Special rules of classification

Details regarding the mechanism for the adjustment of components of the lighting device F21V 17/02, it is the desirable to give the Indexing Code of F21V 14/04, F21V 14/06 or F21V 14/08

Details regarding the mechanism for the adjustment of the lamp holder or the light source F21V 19/02, it is then desirable to give the Indexing Code F21V 14/02

F21V 14/003

{by interposition of elements with electrically controlled variable light transmissivity, e.g. liquid crystal elements or electrochromic devices (liquid crystal elements G02F 1/13)}

References

Informative references

Attention is drawn to the following places, which may be of interest for search:

In vehicle headlamps	F21S 48/1731
Liquid crystal elements	G02F 1/13

F21V 14/08

by movement of the screens {or filters}

Definition statement

This place covers:

Changing characteristic or distribution of light by movement of screens or filters

References

Informative references

Attention is drawn to the following places, which may be of interest for search:

Adjustable lamellae	F21V 11/04
Movable screens being sheets without apertures	F21V 11/18
In vehicle headlamps	F21S 48/1768

F21V 15/00

Protecting lighting devices from damage (protection from thermal damage F21V 29/00; gas-tight or water-tight arrangements F21V 31/00)

Definition statement

This place covers:

Protecting lighting devices from damage due to external interactions, e.g. anti-vandalism devices, cages

References

Limiting references

This place does not cover:

Protecting lighting devices from thermal damage	F21V 29/00
Gas-tight or water-tight arrangements	F21V 31/00

F21V 15/01

Housings, e.g. material or assembling of housing parts (F21V 15/02 takes precedence {housings forming signs or letters G09F 13/04})

References

Limiting references

This place does not cover:

Cages for protecting lighting devices from damage	F21V 15/02
Housings forming signs or letters	G09F 13/0404

Informative references

Attention is drawn to the following places, which may be of interest for search:

Lighting device essentially made of an elongated section for suspending at least one linear light source	F21S 8/031
Casings, cabinets or drawers for electric apparatus	H05K 5/00

F21V 15/013

{the housing being an extrusion}

References

Informative references

Attention is drawn to the following places, which may be of interest for search:

Lighting devices or systems using a string or strip of light sources Strings rigidly mounted on a frame	**F21S4/00A**

F21V 15/02

Cages

Definition statement

This place covers:

Illustrative example of subject matter classified in this group.

e.g.US2010061111

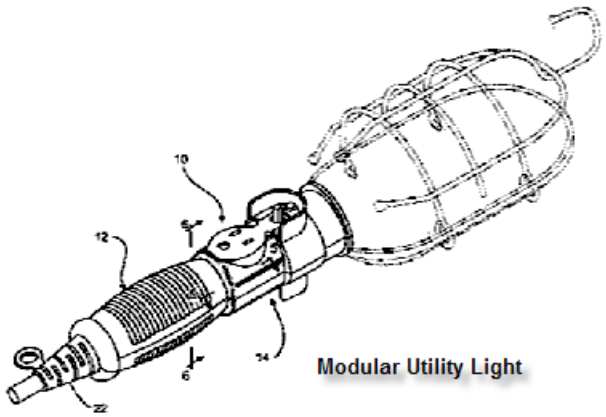

F21V 15/04

Resilient mountings, e.g. shock absorbers (in general F16F 15/04 {shock absorbing devices of vehicle headlamp housings B60Q 1/0491})

References

Limiting references

This place does not cover:

Shock absorbing devices of headlamp housings	B60Q 1/0491

Informative references

Attention is drawn to the following places, which may be of interest for search:

Details of lighting devices employing liquid fuel as light source, not otherwise provided for; Fastening or safety devices for reflectors, cover glasses or chimneys; Protections against shocks	F21V 37/0091
Shock absorbing devices in general	F16F 15/04

F21V 17/00

Fastening of component parts of lighting devices, e.g. shades, globes, refractors, reflectors, filters, screens, grids or protective cages (of light sources or light holders F21V 19/00)

References

Limiting references

This place does not cover:

Fastening of light sources or light holders	F21V 19/00

Application-oriented references

Examples of places where the subject matter of this place is covered when specially adapted, used for a particular purpose, or incorporated in a larger system:

Fastening or lifting of the lamp glass of lanterns	F21L 19/003
Fastening of component parts of vehicle headlamps	F21S 48/1208, F21S 48/1305, F21S 48/155
Fastening of component parts of vehicle signal lamps	F21S 48/2206, F21S 48/232

Informative references

Attention is drawn to the following places, which may be of interest for search:

For gas-tight or water-tight arrangements	F21V 31/00

F21V 17/007

{with provision for shipment or storage}

Definition statement

This place covers:

Components of lighting devices intended to be easily dismounted or with reduced dismounted volume for shipment or storage

References

Informative references

Attention is drawn to the following places, which may be of interest for search:

Foldable or collapsible frames for shades for light sources	F21V 1/06
Construction of reflector with provision for folding or collapsing	F21V 7/18
Receptacles with Roll-up holders with pockets for separates articles (personal use); Not limited to lamps	A45C 11/26
Machines, apparatus or devices for or method of packaging or material; unpacking	B65B
Packaging for ampoules, lamp bulbs (for sale)	B65D 85/42

Packaging for ampoules or lamp bulbs, e.g. for sale	B65D 85/42
Supports or holders for coiled, wound or folded material	B65H 75/02
Supports or holders for coiled, wound or folded material	B65H 75/02

F21V 17/02

with provision for adjustment (F21V 17/04 - F21V 17/08 take precedence)

Definition statement

This place covers:

Details regarding the mechanism for the adjustment

e.g.US3671735

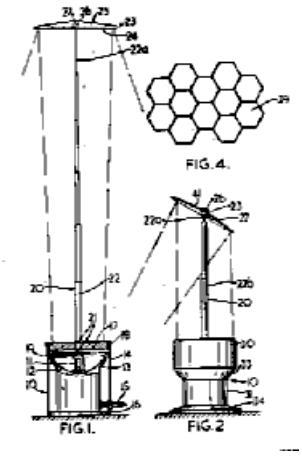

References

Limiting references

This place does not cover:

Fastening of component parts of lighting devices, the fastening being onto or by the light source	F21V 17/04
Fastening of component parts of lighting devices, the fastening being onto or by the lampholder	F21V 17/06
Fastening of component parts of lighting devices, onto the supporting or suspending arrangements of the lighting device, e.g. power cords, standards	F21V 17/08

Application-oriented references

Examples of places where the subject matter of this place is covered when specially adapted, used for a particular purpose, or incorporated in a larger system:

Changing the characteristics or distribution of the light emitted by adjustment of parts	F21V 14/00

Special rules of classification

Always provide also the information which component is concerned by giving the relevant Indexing Code F21V 5/00-F21V 9/00; if the focus is on the change in the characteristics or distribution of the light emitted give also additional information symbols in groups F21V 14/04-F21V 14/08

F21V 17/04

the fastening being onto or by the light source

Definition statement

This place covers:

Illustrative example of subject matter classified in this group.

e.g.WO2010078339

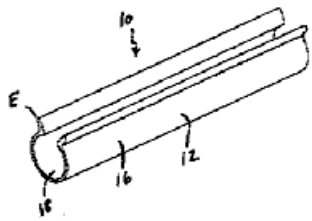

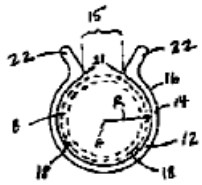

F21V 17/06

the fastening being onto or by the lampholder

Definition statement

This place covers:

e.g.US1293909

Electric light-globe holder

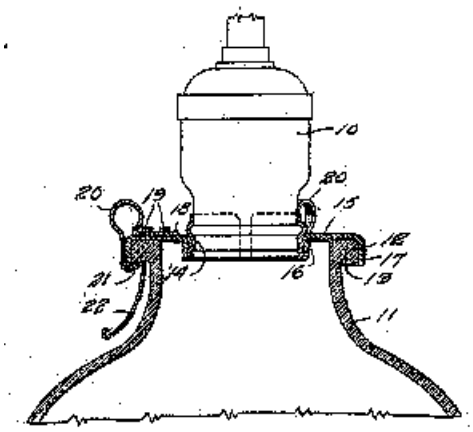

e.g.US2010046238

Outer shell structure of a decoration lamp string

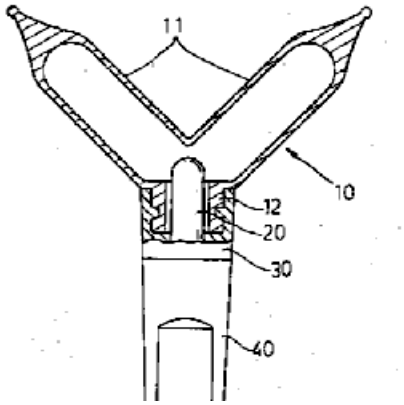

F21V 17/10

characterised by specific fastening means or way of fastening (F21V 17/02 - F21V 17/08 take precedence)

References

Limiting references

This place does not cover:

Fastening of component parts of lighting devices with provision for adjustment	F21V 17/02
Fastening of component parts of lighting devices, the fastening being onto or by the light source	F21V 17/04
Fastening of component parts of lighting devices, the fastening being onto or by the lampholder	F21V 17/06
Fastening of component parts of lighting devices, onto the supporting or suspending arrangements of the lighting device, e.g. power cords, standards	F21V 17/08

F21V 17/101

{permanently, e.g. welding, gluing or riveting}

References

Informative references

Attention is drawn to the following places, which may be of interest for search:

Joining or sealing of preformed parts, welding of plastics materials	B29C 65/00
Joining sheets or plates, e.g. panels, to one another or to strips or bars parallel to them by means of riveting	F16B 5/04

F21V 19/00

Fastening of light sources or lamp holders (fastening electric light source solely by the coupling device H01R 33/00; {special means for attaching candle to candle holder F21V 35/003})

References

Limiting references

This place does not cover:

Special means for attaching the candle to the candle holder	F21V 35/003
Fastening electric light sources in vehicle headlamps	F21S 48/1104
Fastening electric light sources in vehicle signal lamps	F21S 48/211
Fastening electric light source solely by the coupling device	H01R 33/00

F21V 19/0005

{of sources having contact pins, wires or blades, e.g. pinch sealed lamp (F21V 19/001 takes precedence)}

References

Limiting references

This place does not cover:

Fastening of removably mounted LEDs; Fastening of removably mounted PCBs holding light sources	F21V 19/001

F21V 19/001

{the light sources being semiconductors devices, e.g. LEDs}

References

Limiting references

This place does not cover:

Fastening of light sources or lampholders: Details of lamp holders, terminals or connectors for vehicle headlamps	F21S 48/1109
Fastening of light sources or lampholders: Details of lamp holders, terminals or connectors for vehicle rear lights	F21S 48/212

Informative references

Attention is drawn to the following places, which may be of interest for search:

Printed circuits structurally associated with non-printed electric components characterised by the use of a flexible or folded printed circuit	H05K 1/189

Synonyms and Keywords

In patent documents, the following abbreviations are often used:

PCB	Printed Circuit Board
LED	Light Emitting Diode

F21V 19/006

{of point-like light sources, e.g. incandescent or halogen lamps, with screw-threaded or bayonet base (of sources having contact pins, wires or blades F21V 19/0005; of LEDs or sources mounted on printed-circuit board F21V 19/001)}

References

Limiting references

This place does not cover:

Fastening of light sources or lampholders of sources having contact pins, wires or blades	F21V 19/0005
Fastening of removably mounted LEDs; Fastening of removably mounted PCBs holding light sources	F21V 19/001

Synonyms and Keywords

In patent documents, the following abbreviations are often used:

LED	Light Emitting Diode

F21V 19/0075

{of tubular light sources, e.g. ring-shaped fluorescent light sources}

References

Informative references

Attention is drawn to the following places, which may be of interest for search:

Holders formed as intermediate parts for linking a counter-part to a coupling part for tubular fluorescent lamps	H01R 33/942

F21V 19/0085

{at least one conductive element acting as a support means, e.g. resilient contact blades, piston-like contact}

Relationships with other classification places

This group does not cover coupling devices in which a holder is adapted for supporting apparatus to which its counterpart is attached or separate parts thereof, see H01R 33/08: Two-pole devices for supporting tubular fluorescent lamps.

F21V 19/02

with provision for adjustment, e.g. for focusing

Definition statement

This place covers:

Details regarding the mechanism for the adjustment of the light source or lampholder

References

Informative references

Attention is drawn to the following places, which may be of interest for search:

Changing the characteristics or distribution of the light emitted by movement of light sources	F21V 14/02

Special rules of classification

If the focus is on the change in the characteristics or distribution of the light emitted give also F21V 14/02

F21V 19/04

with provision for changing light source, e.g. turret {(auxiliary devices for cleaning, placing, or removing incandescent lamps H01K 3/32, fluorescent lamps H01J 9/006)}

References

Informative references

Attention is drawn to the following places, which may be of interest for search:

Auxiliary devices for cleaning, placing, or removing fluorescent lamps	H01J 9/006
Auxiliary devices for cleaning, placing, or removing incandescent lamps	H01K 3/32

F21V 21/00

Supporting, suspending, or attaching arrangements for lighting devices (F21V 17/00, F21V 19/00 take precedence; arrangement of signalling or lighting devices, the mounting or supporting thereof or circuits therefor, for vehicles in general B60Q, stands for supporting apparatus or articles in general F16M 11/00); Hand grips

References

Limiting references

This place does not cover:

Fastening of component parts of lighting devices	F21V 17/00
Fastening of light sources or lampholders	F21V 19/00

Informative references

Attention is drawn to the following places, which may be of interest for search:

Arrangement of signalling or lighting devices, the mounting or supporting thereof or circuits therefor, for vehicles in general	B60Q
Stands for supporting apparatus or articles in general	F16M 11/00

F21V 21/002

making direct electrical contact, e.g. by piercing (F21V 21/35 takes precedence)

Definition statement

This place covers:

The housing of the lighting device or lampholder is equipped with needle contacts to pierce the cable insulator to connect while attaching the housing or lampholder to the cable.

e.g.WO2007023261

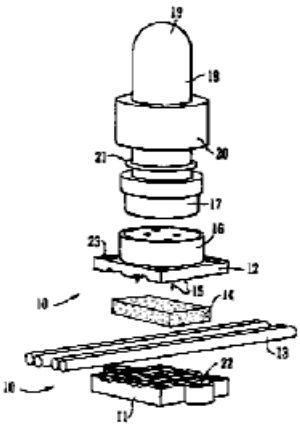

References

Limiting references

This place does not cover:

Supporting elements displaceable along a guiding element with direct electrical contact between the supporting element and electric conductors running along the guiding element	F21V 21/35

Informative references

Attention is drawn to the following places, which may be of interest for search:

Electrically-conductive connections between two or more conductive members in direct contact and means for effecting or maintaining such contact; Needle-point, slotted plate, or analogous contact members penetrating insulation or cable strands having at least one tooth, prong, pin or needle penetrating the insulation	H01R 4/2404

F21V 21/005

for several lighting devices in an end-to-end arrangement, i.e. light tracks

Definition statement

This place covers:

Housing of lighting devices mechanically in side-by-side or end-to-end contact

e.g.EP2012054

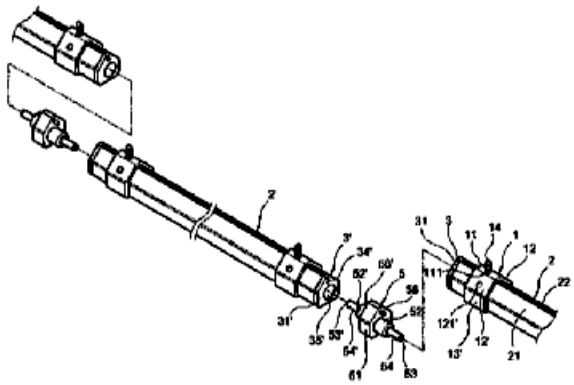

References

Informative references

Attention is drawn to the following places, which may be of interest for search:

Systems of lighting devices, not provided for in main groups F21S 4/00 - F21S 10/00 or F21S 19/00	F21S 2/00
Lighting devices or systems	F21S 2/00

F21V 21/008

Suspending from a cable or suspension line

Definition statement

This place covers:

Details of the suspending means from a cable or suspension line

References

Informative references

Attention is drawn to the following places, which may be of interest for search:

Lighting devices intended for fixed installation intended only for mounting on a ceiling or like overhead structure	F21S 8/06

F21V 21/02

Wall, ceiling, or floor bases; Fixing pendants or arms to the bases (F21V 21/08 takes precedence; bases for movable standing lamps F21V 21/06)

References

Limiting references

This place does not cover:

Supporting, suspending, or attaching arrangements for lighting devices; Devices for easy attachment to any desired place, e.g. clip, clamp, magnet	F21V 21/08

Informative references

Attention is drawn to the following places, which may be of interest for search:

Bases for movable standing lamps	F21V 21/06
Installation of electrical cables or lines in buildings / Details / Distribution boxes / ceiling roses or other lighting sets	H02G 3/20

F21V 21/03

Ceiling bases, e.g. ceiling roses (F21V 21/04 takes precedence)

Definition statement

This place covers:

Illustrative example of subject matter classified in this group.

e.g.FR2186626

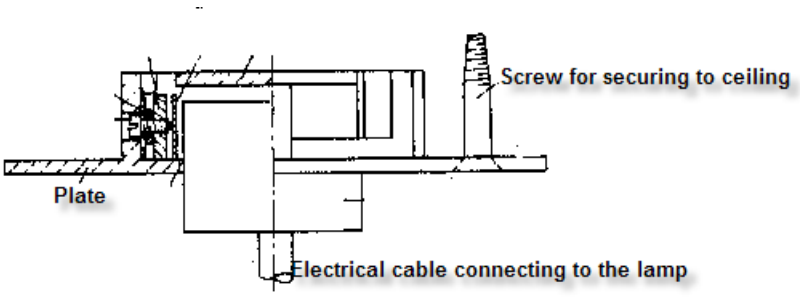

F21V 21/04

Recessed bases

Definition statement

This place covers:

Details of the fastening means for a recessed lighting device

e.g.WO2010/135928

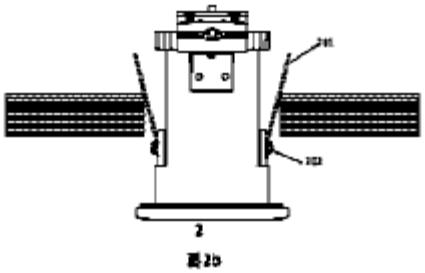

e.g.WO2009109049

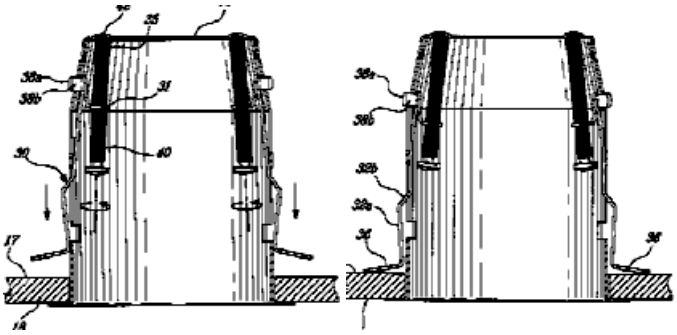

e.g.US2010110705

Hanger bar for recessed lighting fixtures

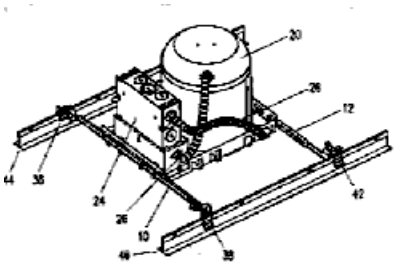

References

Informative references

Attention is drawn to the following places, which may be of interest for search:

Arrangements for fixing loudspeaker transducers, e.g. in a box, furniture	H04R 1/025

Special rules of classification

Generally no classification in F21S 8/02

F21V 21/06

Bases for movable standing lamps; Fixing standards to the bases (F21V 21/08 takes precedence)

Definition statement

This place covers:

Portable lighting devices provided with stands or bases to be used as a movable standing lamp

References

Limiting references

This place does not cover:

Supporting, suspending, or attaching arrangements for lighting devices; Devices for easy attachment to any desired place, e.g. clip, clamp, magnet	F21V 21/08

Informative references

Attention is drawn to the following places, which may be of interest for search:

Mechanical connection of the arms of a multi-armed chandelier	F21V 21/02
Electrical connection of the arms of a multi-armed chandelier	F21V 23/06
Stands for supporting apparatus or articles in general	F16M 11/00

Synonyms and Keywords

In patent documents, the following words/expressions are often used as synonyms:

- " base", "Socles", "embase" and "piétement"

F21V 21/08

Devices for easy attachment to any desired place, e.g. clip, clamp, magnet

References

Informative references

Attention is drawn to the following places, which may be of interest for search:

Devices for fastening or securing constructional elements or machine parts together	F16B

F21V 21/084

Head fittings

Definition statement

This place covers:

Illustrative example of subject matter classified in this group.

e.g.US3249271

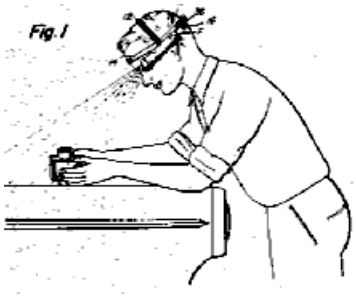

References

Application-oriented references

Examples of places where the subject matter of this place is covered when specially adapted, used for a particular purpose, or incorporated in a larger system:

Hats or helmets with lamps	A42B 3/044

Informative references

Attention is drawn to the following places, which may be of interest for search:

Instruments for performing medical examinations of the interior of cavities or tubes of the body by visual or photographical inspection, e.g. endoscopes with illuminating arrangements	A61B 1/06
Supporting and suspending elements for a portable lighting device; Head fittings	F21L 15/14

F21V 21/0885

{for portable lighting devices}

References

Informative references

Attention is drawn to the following places, which may be of interest for search:

Supporting and suspending elements for a portable lighting device; Clips ; Clamps	F21L 15/14

F21V 21/0925

{for portable lighting devices}

Definition statement

This place covers:

Illustrative example of subject matter classified in this group.

e.g.GB739441

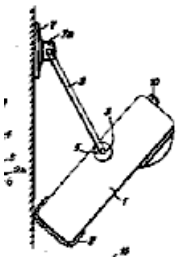

e.g.US2402877

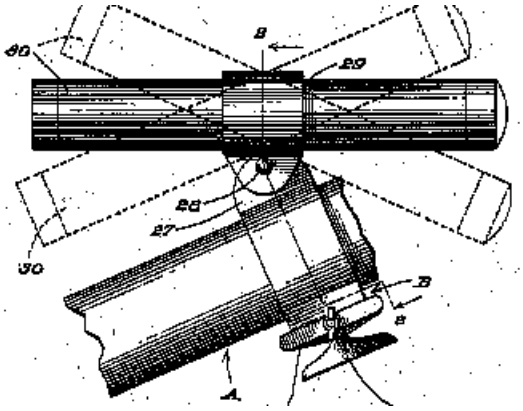

F21V 21/10

Pendants, arms, or standards; Fixing lighting devices to pendants, arms, or standards (adjustable mounting F21V 21/14; construction of posts not peculiar to use with lighting devices E04H 12/00)

Definition statement

This place covers:

Access door to the inside of a pole for lighting device; compartments inside the lighting pole

References

Limiting references

This place does not cover:

Construction of posts not peculiar to use with lighting devices	E04H 12/00

Informative references

Attention is drawn to the following places, which may be of interest for search:

Adjustable mounting of lighting devices	F21V 21/14

F21V 21/112

Fixing lighting devices to pendants (F21V 21/002 takes precedence)

Definition statement

This place covers:

e.g.US2008112172

Adjustment clip for a suspended light fixture

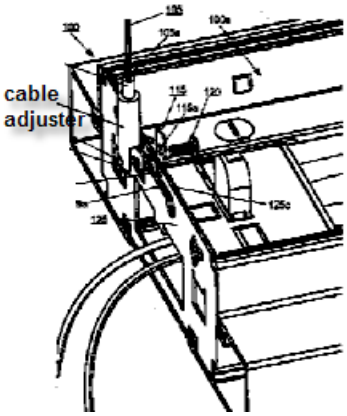

References

Limiting references

This place does not cover:

Supporting, suspending, or attaching arrangements for lighting devices making direct electrical contact	F21V 21/002

F21V 21/116

Fixing lighting devices to arms or standards (F21V 21/002 takes precedence)

Definition statement

This place covers:

e.g.US2011122634

Connector for connecting lamp to support

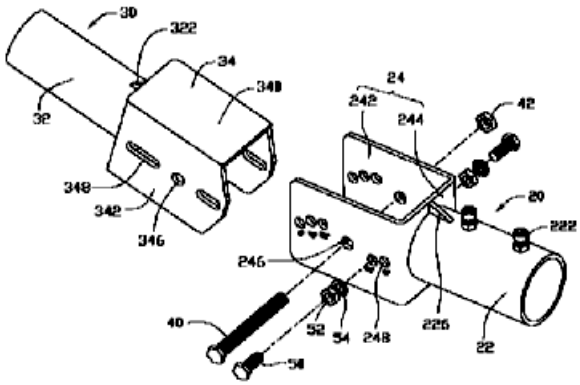

e.g.US2010102185

T-channel fixture-mounting pole clamp

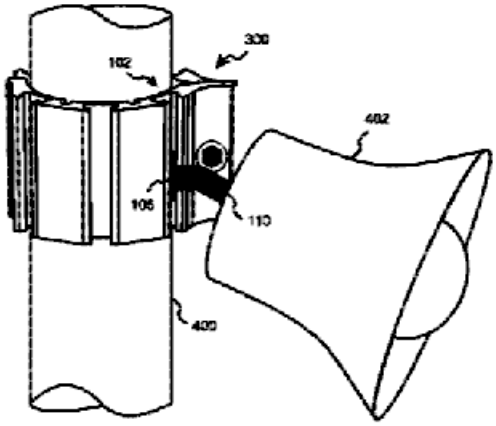

References

Limiting references

This place does not cover:

Supporting, suspending, or attaching arrangements for lighting devices making direct electrical contact	F21V 21/002

F21V 21/13

Spring-loaded poles fixed at both ends

Definition statement

This place covers:

Illustrative example of subject matter classified in this group.

e.g.DE29703165U

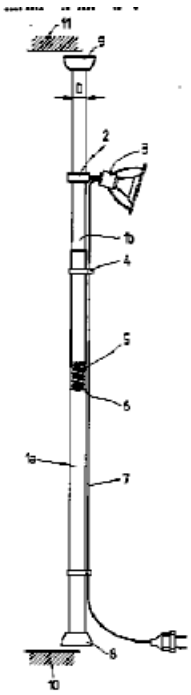

F21V 21/145

{for portable lighting devices}

Definition statement

This place covers:

Portable lighting devices provided with adjustable stands or bases to be used as a movable standing lamp

e.g.US3936022

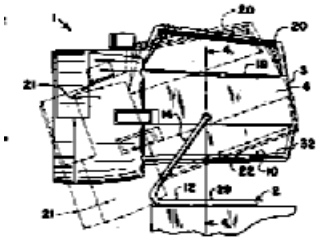

e.g.GB739441

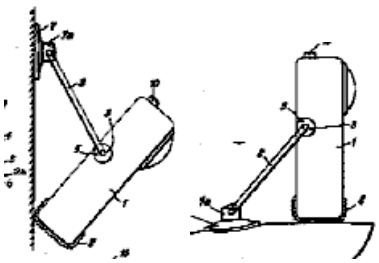

Special rules of classification

Documents with this scope, published before 1985, are classified in the higher group F21V 21/14

F21V 21/15

specially adapted for power operation, e.g. by remote control

Definition statement

This place covers:

Lighting devices comprising electrical motor to actuate an adjustment movement of the lighting devices

References

Informative references

Attention is drawn to the following places, which may be of interest for search:

Arrangements of switches in or on lighting devices activated by remote control means	F21V 23/0435

F21V 21/22

telescopic

References

Informative references

Attention is drawn to the following places, which may be of interest for search:

Telescopic towers; masts, poles	E04H 12/182
Undercarriages changeable in height or length of legs by telescoping	F16M 11/26

F21V 21/24

Lazy-tongs

Definition statement

This place covers:

Illustrative example of subject matter classified in this group.

e.g.DE102009010933

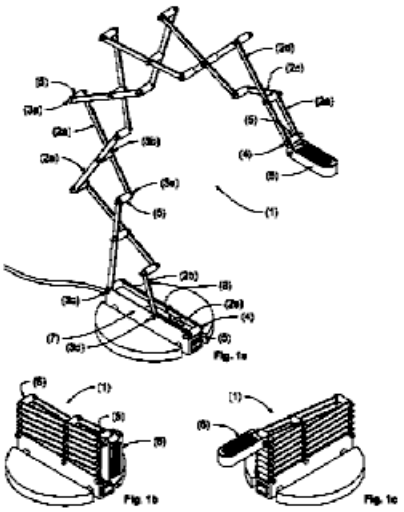

F21V 21/29

employing universal joints

References

Informative references

Attention is drawn to the following places, which may be of interest for search:

Universal joints, i.e. with mechanical connection allowing angular movement or adjustment of the axes of the parts in any direction	F16L 27/02

F21V 21/30

Pivoted housings or frames

References

Informative references

Attention is drawn to the following places, which may be of interest for search:

Electric lighting devices with self-contained electric batteries or cells characterised by the provision of a light source housing portion adjustably fixed to the remainder of the device	F21L 4/04

F21V 21/34

Supporting elements displaceable along a guiding element {(telescopic mounting of lighting devices F21V 21/22)}

References

Limiting references

This place does not cover:

Telescopic mountings of a lighting device	F21V 21/22

Informative references

Attention is drawn to the following places, which may be of interest for search:

Coupling parts adapted for simultaneous co-operation with two or more identical counterparts, e.g. for distributing energy to two or more circuits; Rails or bus-bars constructed so that the counterparts can be connected thereto at any point along their length, e.g. track lighting systems	H01R 25/14

F21V 21/36

Hoisting or lowering devices, e.g. for maintenance

References

Limiting references

This place does not cover:

Adjustable mountings of lighting devices	F21V 21/14

F21V 21/40

Hand grips

References

Informative references

Attention is drawn to the following places, which may be of interest for search:

Operation lamp handles	A61B 90/36

Glossary of terms

In this place, the following terms or expressions are used with the meaning indicated:

Handle	handle is defined to grab and/or manipulate/move the lighting device to a chosen position and not as being a handle on which a lighting device is or can be mounted.

F21V 21/403

{for operation or dentist lamps}

Special rules of classification

In this group, it is desirable to add the Indexing Code F21W 2131/202 or F21W 2131/205

F21V 21/406

{for portable lighting devices}

References

Informative references

Attention is drawn to the following places, which may be of interest for search:

Supporting and suspending elements for a portable lighting device	F21L 15/08

F21V 23/00

Arrangement of electric circuit elements in or on lighting devices {(characterised by cooling arrangements F21V 29/508)}

References

Limiting references

This place does not cover:

Electric circuits per se	H05B 39/00

Informative references

Attention is drawn to the following places, which may be of interest for search:

Arrangement of electronic circuits separated from the light source for vehicle (e.g. mounting of housings for starter circuits for discharge lamps)	B60Q 1/0094
Arrangement of electronic circuits part of the light source or light source holder for vehicle (e.g. mounting of housings of starter circuits for discharge lamps)	F21S 48/1109

F21V 23/04

the elements being switches (safety devices F21V 25/00)

Definition statement

This place covers:

Electric means varying continuously or discontinuously the light intensity, e.g. ON/OFF switch, potentiometer, dimmer,...etc

References

Informative references

Attention is drawn to the following places, which may be of interest for search:

Safety devices structurally associated with lighting devices	F21V 25/00
Details of kinds solely applicable to the devices covered by groups F21L 2/00 - F21L 14/00 concerned with the fitting	F21L 15/06

F21V 23/06

the elements being coupling devices, {e.g. connectors}

References

Informative references

Attention is drawn to the following places, which may be of interest for search:

Line connectors; Current collectors	H01R

F21V 25/00

Safety devices structurally associated with lighting devices (gas- tight or water-tight arrangements F21V 31/00; in general F16P; protective circuit arrangements per se H02H 7/00)

Definition statement

This place covers:

Electromagnetic shielding of the lighting device

Intumescent material associated with lighting device

References

Informative references

Attention is drawn to the following places, which may be of interest for search:

Gas-tight or water-tight arrangements	F21V 31/00
Safety devices in general	F16P
Protective circuit arrangements per se	H01H 7/00

F21V 25/02

coming into action when lighting device is disturbed, dismounted, or broken

References

Informative references

Attention is drawn to the following places, which may be of interest for search:

Electric circuit per se	H05B

F21V 27/00

Cable-stowing arrangements structurally associated with lighting devices, e.g. reels (storing lengths of cable in general B65H {the lighting devices being vehicle headlamps F21S 48/1109; the lighting devices being vehicle lights F21S 48/212})

Definition statement

This place covers:

Power cable winding device for a lighting device

e.g.DE202007002658U

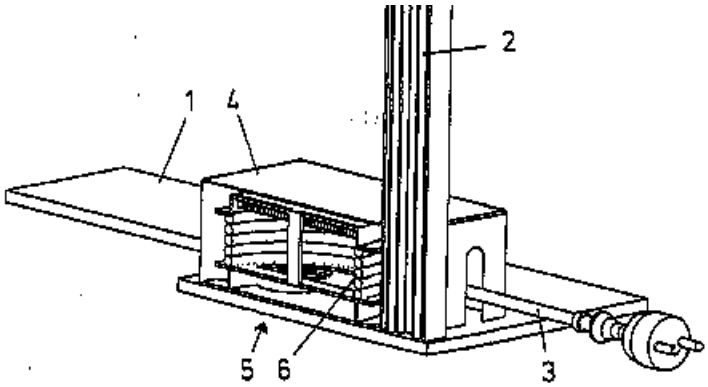

References

Limiting references

This place does not cover:

Cable-stowing arrangements structurally associated with lighting devices, the lighting devices being vehicle headlamps	F21S 48/1109
Cable-stowing arrangements structurally associated with lighting devices, the lighting devices being vehicle rear lights	F21S 48/212

Informative references

Attention is drawn to the following places, which may be of interest for search:

Storing lengths of cable in general	B65H

F21V 27/02

Cable inlets

Definition statement

This place covers:

Illustrative example of subject matter classified in this group.

e.g.US2010155135

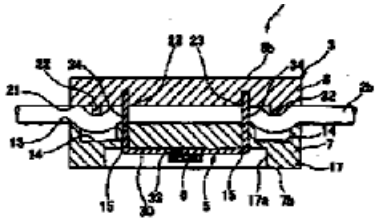

References

Informative references

Attention is drawn to the following places, which may be of interest for search:

Details of coupling devices of the kinds covered by groups H01R 12/70 or H01R 24/00- H01R 33/00; Means for relieving strain on wire connection, e.g. cord grip	H01R 13/58

F21V 29/00

Protecting lighting devices from thermal damage; Cooling or heating arrangements specially adapted for lighting devices or systems (lighting fixtures combined with outlets for air-treatment systems F24F 13/078)

References

Limiting references

This place does not cover:

Lighting fixtures combined with outlets for air-treatment systems	F24F 13/078

Application-oriented references

Examples of places where the subject matter of this place is covered when specially adapted, used for a particular purpose, or incorporated in a larger system:

Cooling of lighting devices for vehicle headlamps or rear lamps	F21S 48/32
Cooling of air-treatment systems with air-flow over lighting fixtures	F24F 3/056
Cooling of projectors or projector type viewers	G03B 21/16
Cooling arrangements for gas- or vapour-discharge lamps	H01J 61/52
Cooling arrangements for electric incandescent lamps	H01K 1/58

Informative references

Attention is drawn to the following places, which may be of interest for search:

Heat pipes	F28D 15/02
Heating or cooling of liquid crystal cells	G02F 1/133382
Control of the temperature of systems for controlling or regulating non-electric variables	G05D 23/00
Cooling means for data processing equipment	G06F 1/20

Arrangements for cooling, heating, ventilating or temperature compensation for semiconductor or other solid state devices	H01L 23/34
Heat extraction or cooling elements for semiconductor devices characterised by the semiconductor body packages	H01L 33/64
Casings or enclosures with channels or ducts for flow of cooling medium	H02K 5/20
Thermal arrangements for printed circuits, e.g. for cooling or heating	H05K 1/0201

F21V 29/002

{Cooling arrangements (F21V 29/02 takes precedence)}

References

Limiting references

This place does not cover:

Cooling by forced air	F21V 29/02

F21V 29/004

{Natural cooling, i.e. by natural convection, conduction or radiation}

Definition statement

This place covers:

Housing or heatsink with cooling channel or chimney

Heatsink with fins

e.g.US2009002997 - a plurality of radially extending blade members (11)

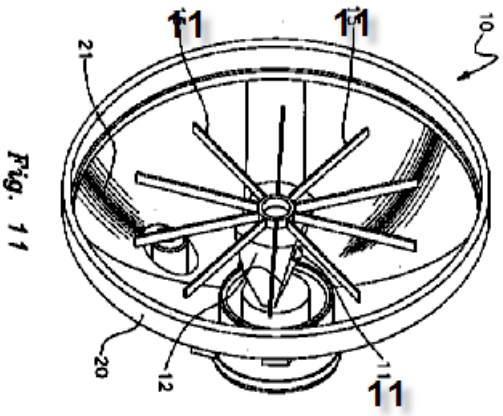

e.g.DE202009008456U

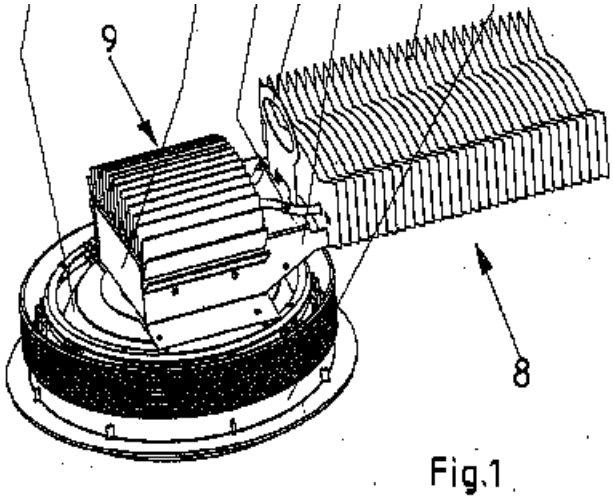

e.g.US2011050070 - see paragraph 79 - Heat pipe

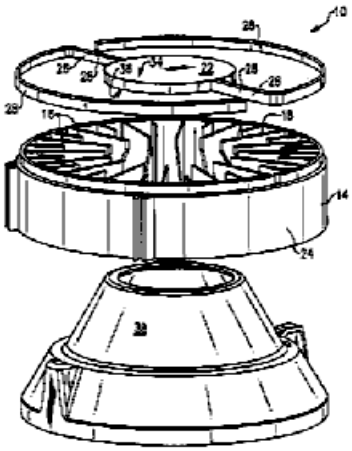

e.g.US2004190285 - see ref. 110 - Heat spreader plate

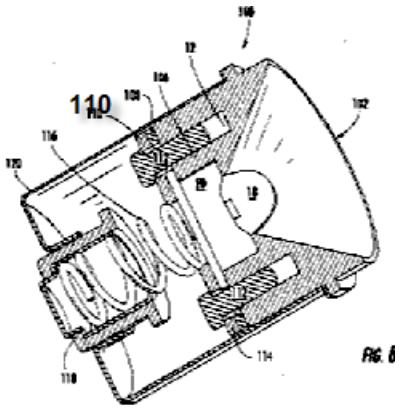

e.g.US2011074265

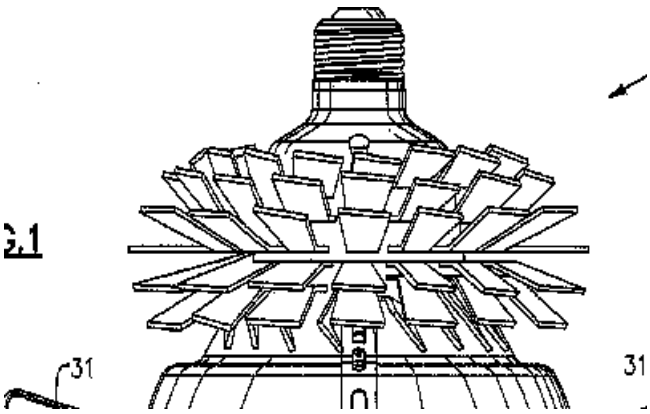

e.g.JP2009289772

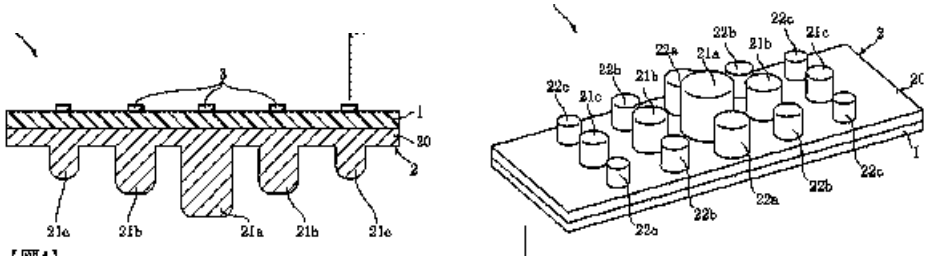

Glossary of terms

In this place, the following terms or expressions are used with the meaning indicated:

Fin	Two dimensional sheet of heat conductive material, thermally linked to the heat sink, having at least partially part of the both sides submitted to air in movement in order to extract heat therefrom.

Synonyms and Keywords

In patent documents, the following words/expressions are often used as synonyms:

- " fin" "blade","cooling vane", "ridge" and "ailette"

F21V 29/02

Cooling by forcing air {or gas} over or around the light source (cooling arrangements structurally associated with electric {discharge or incandescent} lamps H01J 61/52, H01K 1/58)

References

Limiting references

This place does not cover:

Heating arrangements structurally associated with electric lamps	H01J 61/52, H01K 1/58

Informative references

Attention is drawn to the following places, which may be of interest for search:

Cooling, preventing overheating of projectors or projection-type viewers	G03B 21/16, **G03B11/20**

F21V 29/15

Thermal insulation

Definition statement

This place covers:

- Means for screening the heat, e.g. screen for heat radiation
- Thermal insulation spaces or air gaps
- Use of heat insulation materials

Illustrative example of thermal insulation space in figure below:

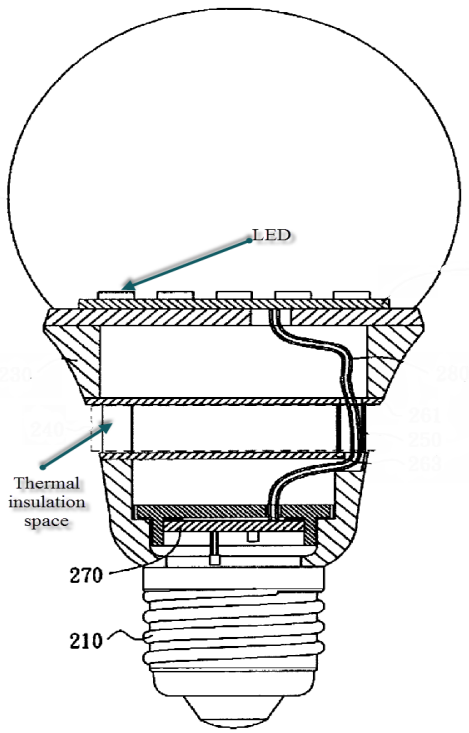

Ilustrative example of air gap between components or in the mass of a component in the figure below:

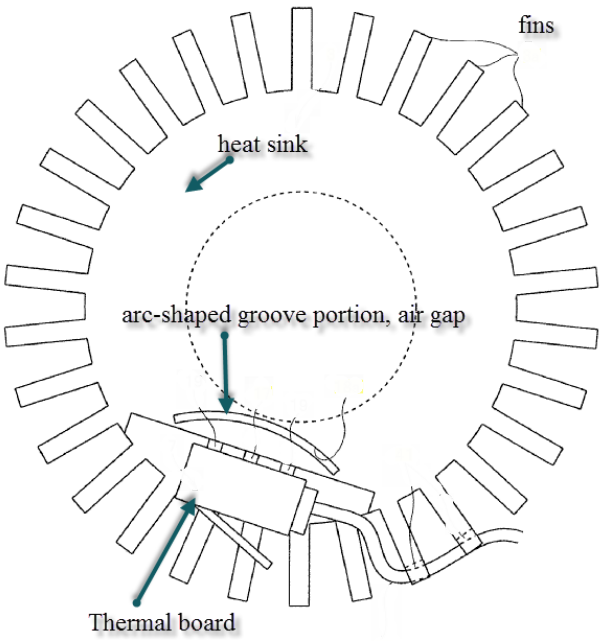

Heat insulating material between components to prevent heat conduction in figure below:

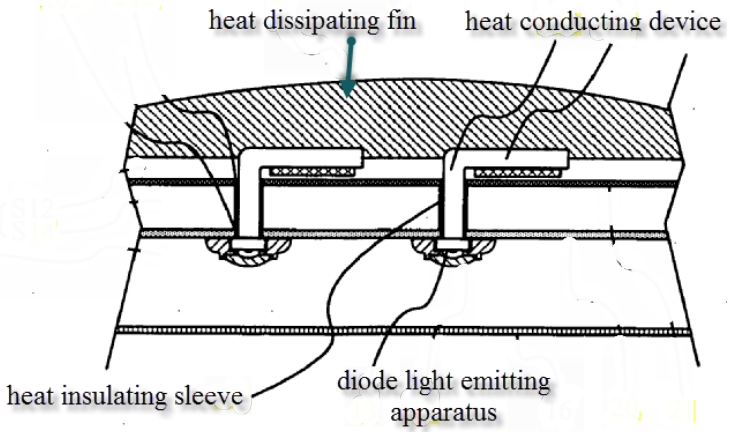

References

Informative references

Attention is drawn to the following places, which may be of interest for search:

Through holes in printed circuit board to screen conductive heat transfer from on one part to the other	H05K 1/0203

F21V 29/504

of refractors

Definition statement

This place covers:

Refractors for light sources being designed to facilitate cooling.

F21V 29/505

of reflectors

Definition statement

This place covers:

Reflectors for light sources being designed to facilitate cooling.

Illustrative examples of subject matter classified in this group, see figures below:

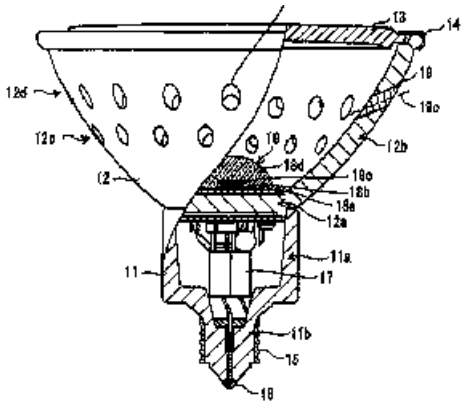

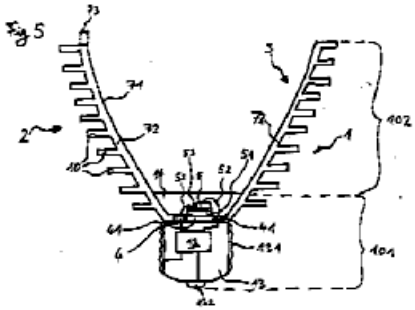

F21V 29/506

of globes, bowls or cover glasses

Definition statement

This place covers:

Globes, bowls and cover glasses being designed to facilitate cooling.

Illustrative examples of subject matter classified in this group:

Special shape of the lamp cover with means for conducting or dissipating heat, e.g. channels or openings. See illustrative example below:

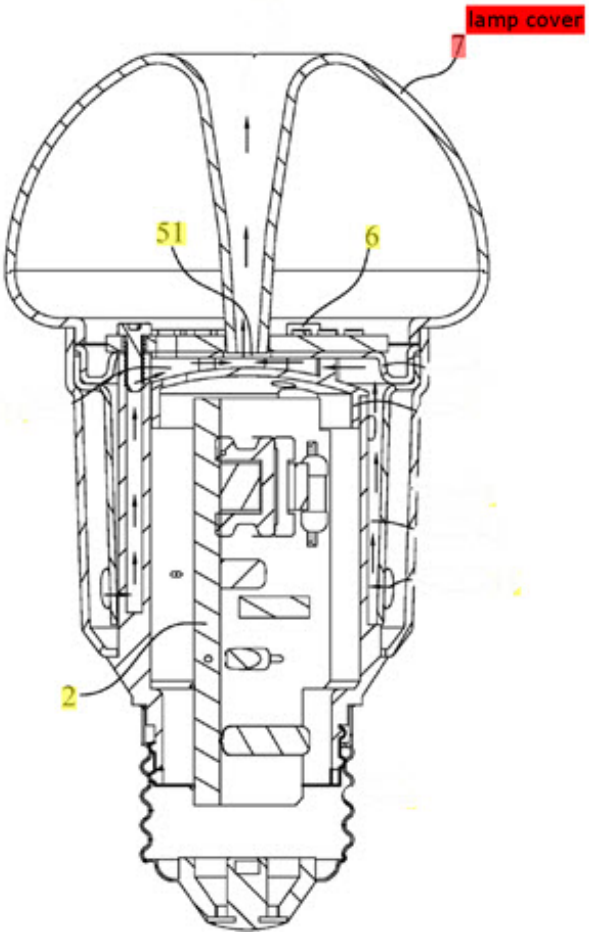

Thermally conductive films or blades contacting the inner surface of the globe to transfer the heat generated by light source to the globe. See illustrative example below:

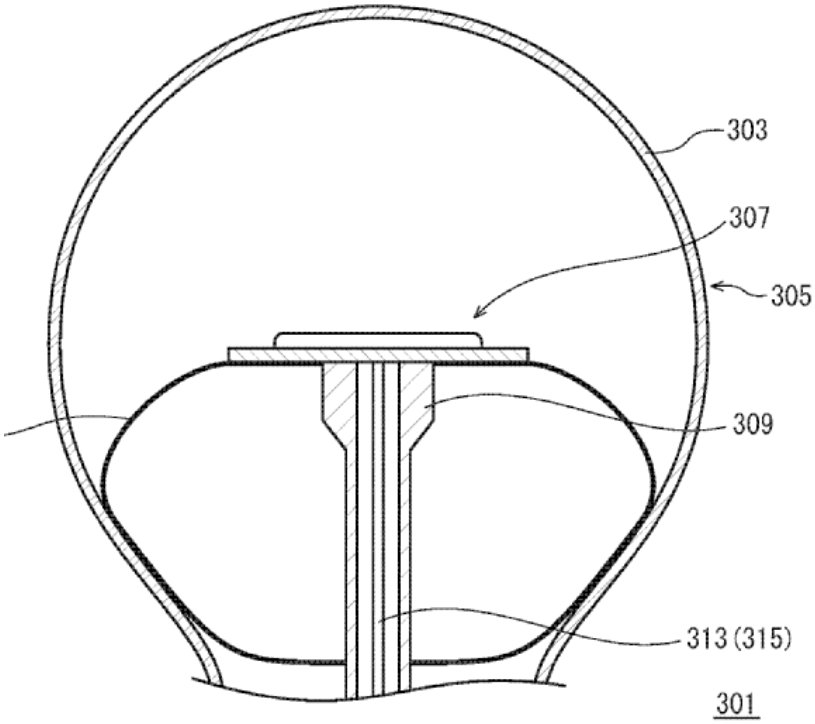

Structure of the cover surface facilitating cooling. See illustrative example below:

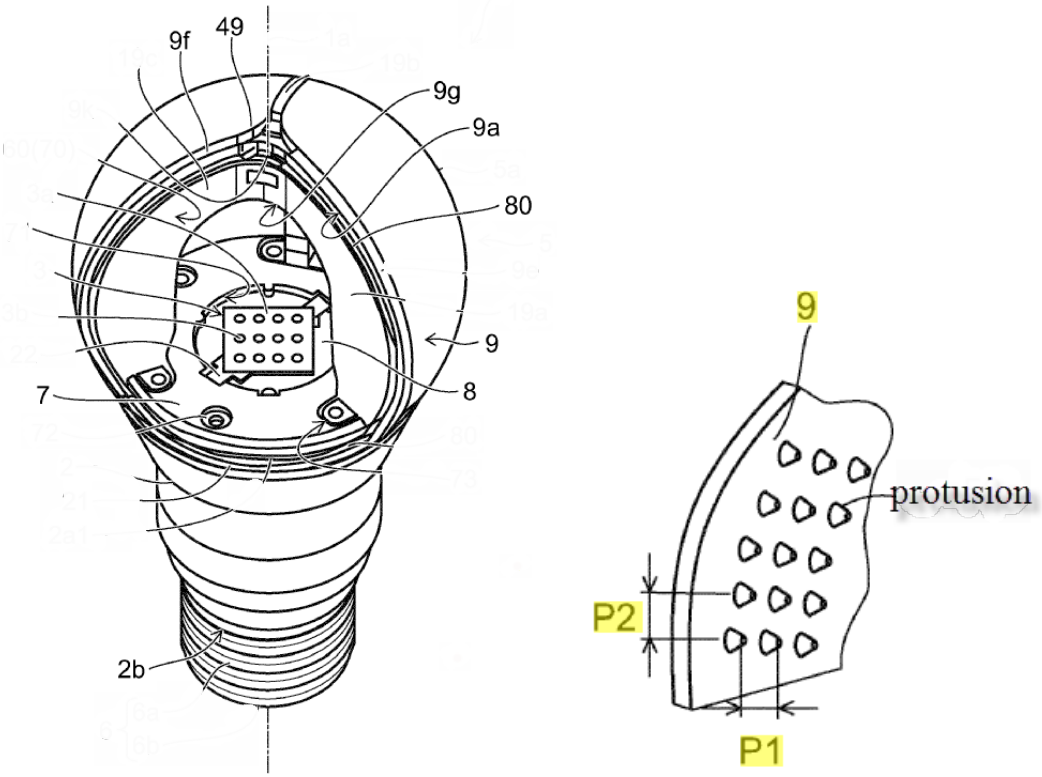

Globe forming fins or the exterior of which in contact with fins. See illustrative example below:

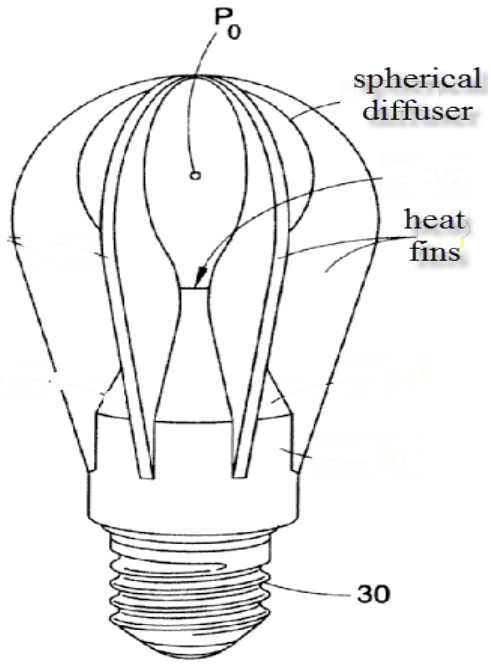

Evaporation and condensation within the globe of the lighting device or LED module or LED lamp, i.e. part of a globe is forming a part of a heat pipe. See illustrative example below:

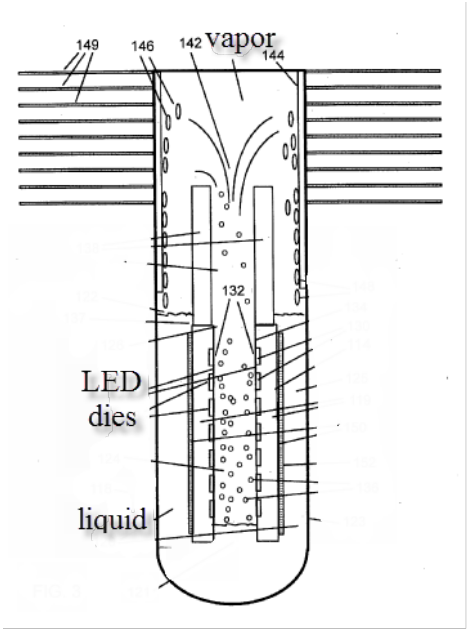

F21V 29/507

of means for protecting lighting devices from damage, e.g. housings

Definition statement

This place covers:

Means for protecting lighting devices from damage, e.g. housings, being designed to facilitate cooling.

Illustrative examples of subject matter classified in this group:

Housing for enclosing light source with openings (151) for facilitating cooling:

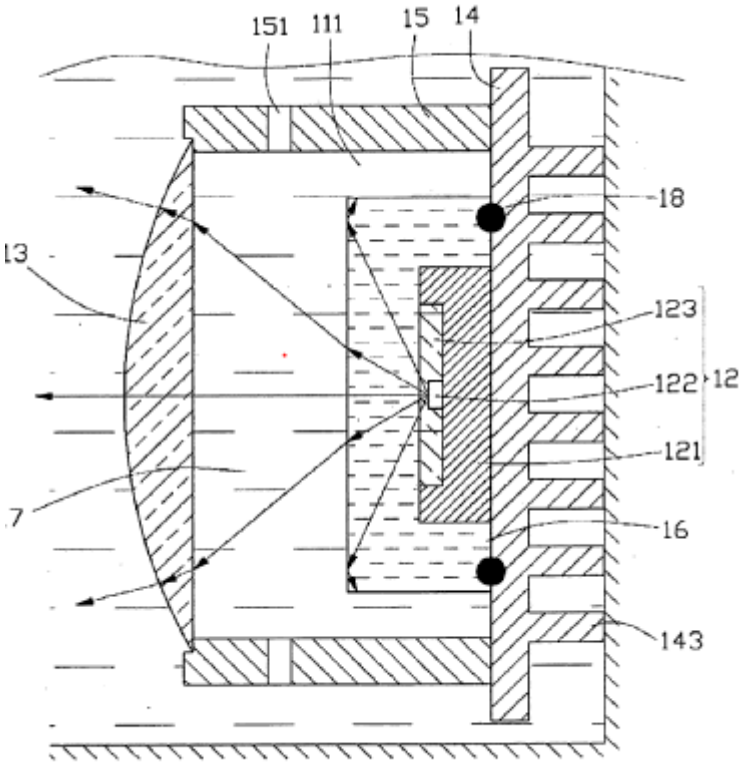

Cage provided for facilitating cooling:

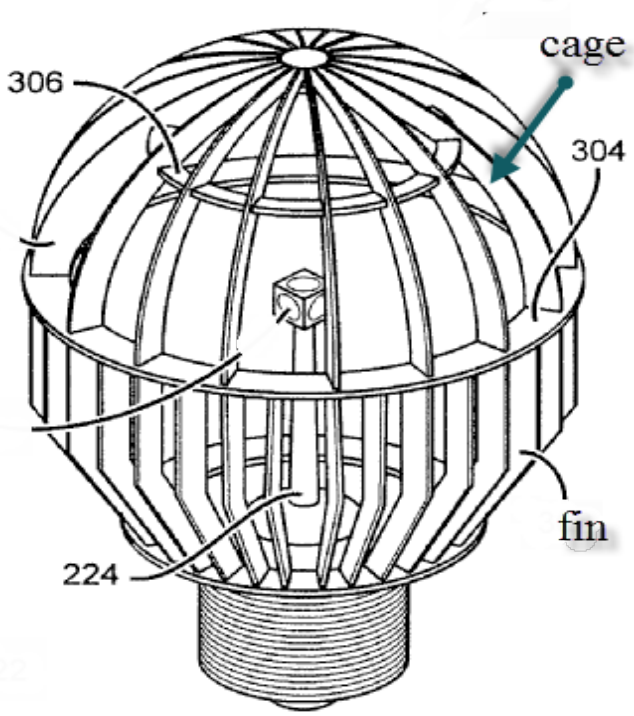

Evaporation and condensation in a housing compartment:

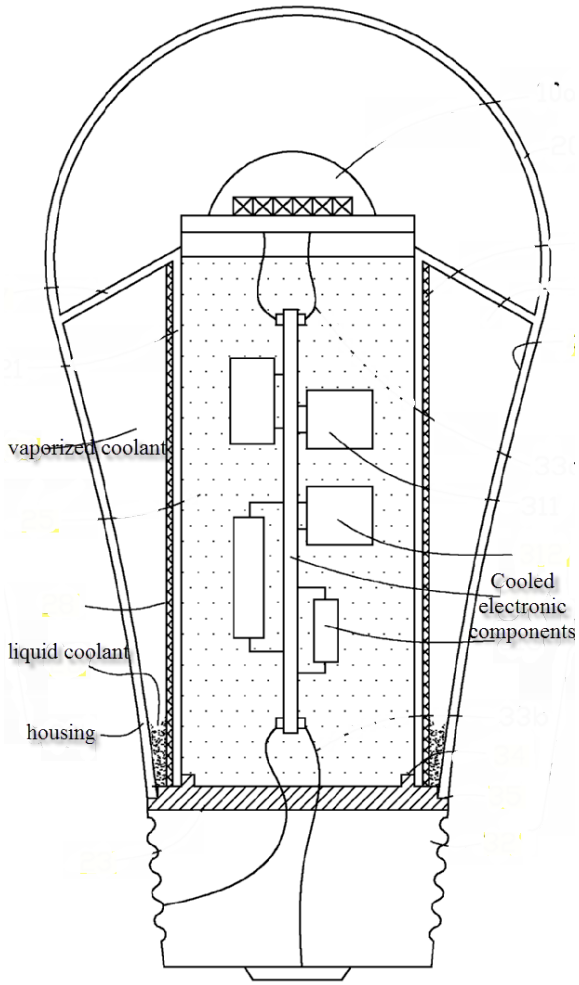

F21V 29/508

of electrical circuits

Definition statement

This place covers:

Means for facilitating the cooling of circuit boards for the drivers or supply circuits of the light sources but not the cooling of light emitters or their supports.

Illustrative examples of subject matter classified in this group:

Electric circuit is cooled directly by evaporation, see figure below:

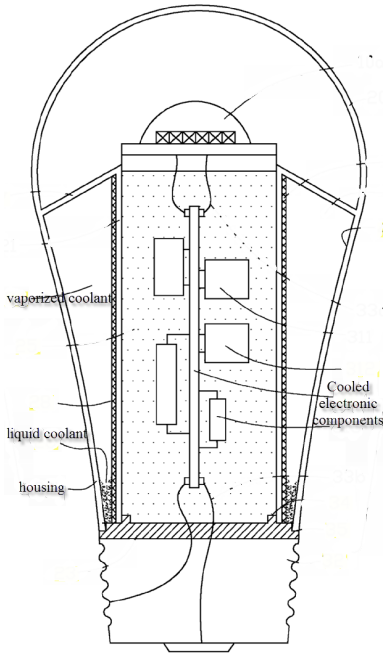

Heat transfer from circuit to the housing, see figure below:

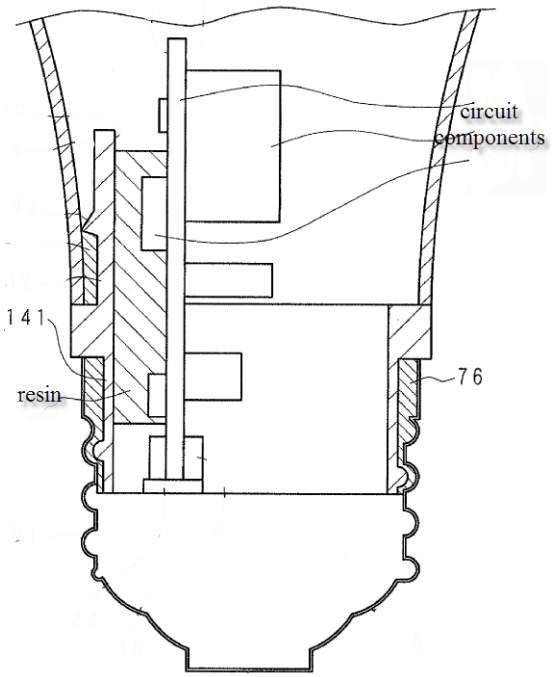

F21V 29/51

using condensation or evaporation of a fluid, e.g. heat pipes

Definition statement

This place covers:

Illustrative examples of subject matter classified in this group:

by using a heat pipe:

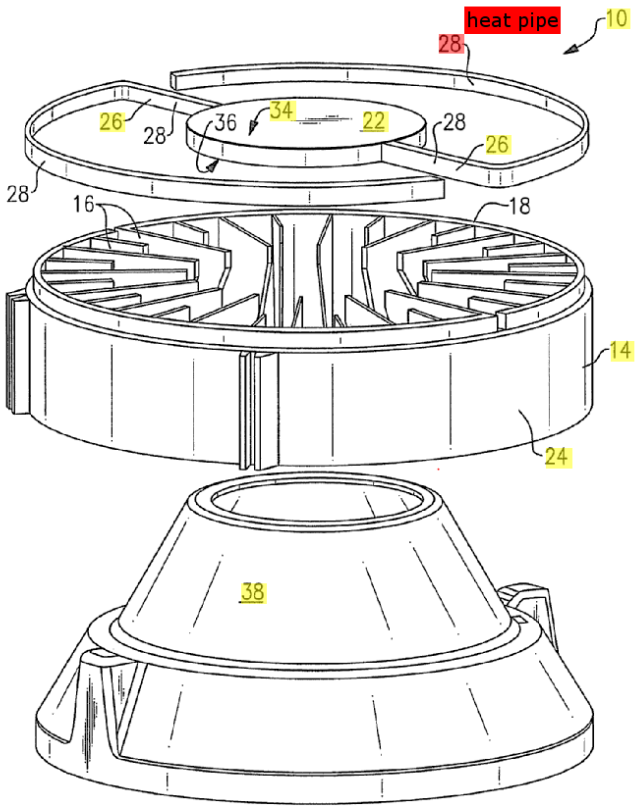

Evaporation and condensation within the globe of the lighting device or LED module:

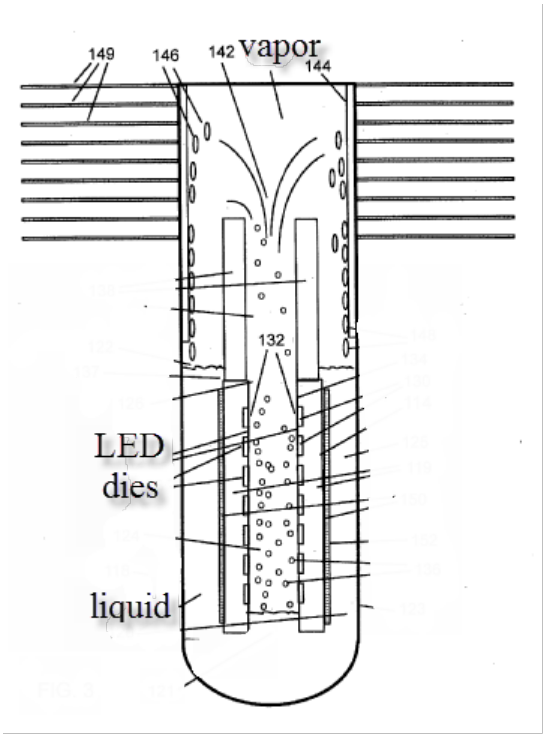

Evaporation and condensation in a housing compartment for cooling of the central arranged electronic circuit:

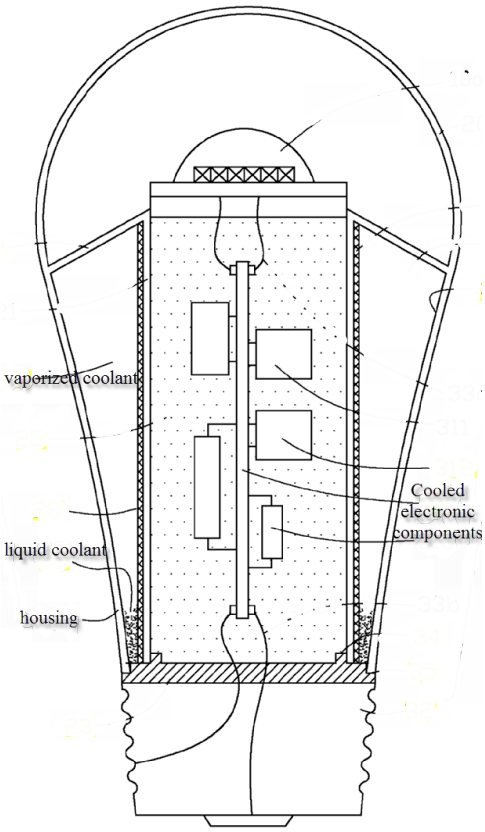

Evaporation of water in open environment to improve heat dissipation:

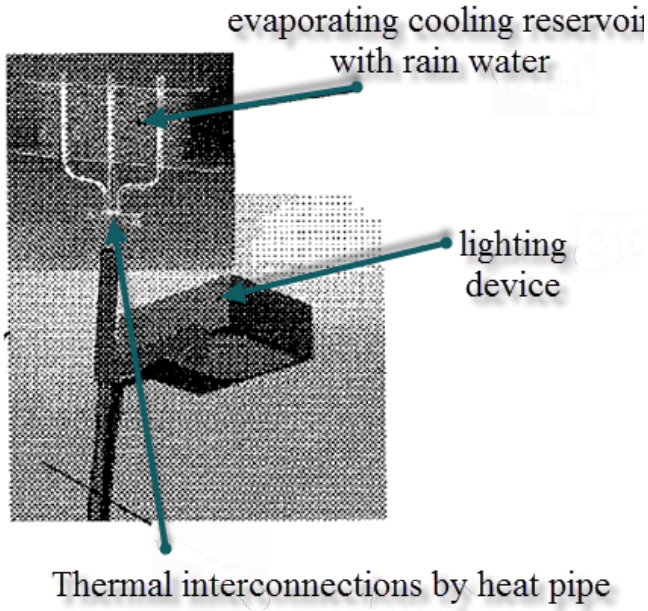

F21V 29/52

electrically powered, e.g. refrigeration systems

Definition statement

This place covers:

Illustrative example of subject matter classified in this group:

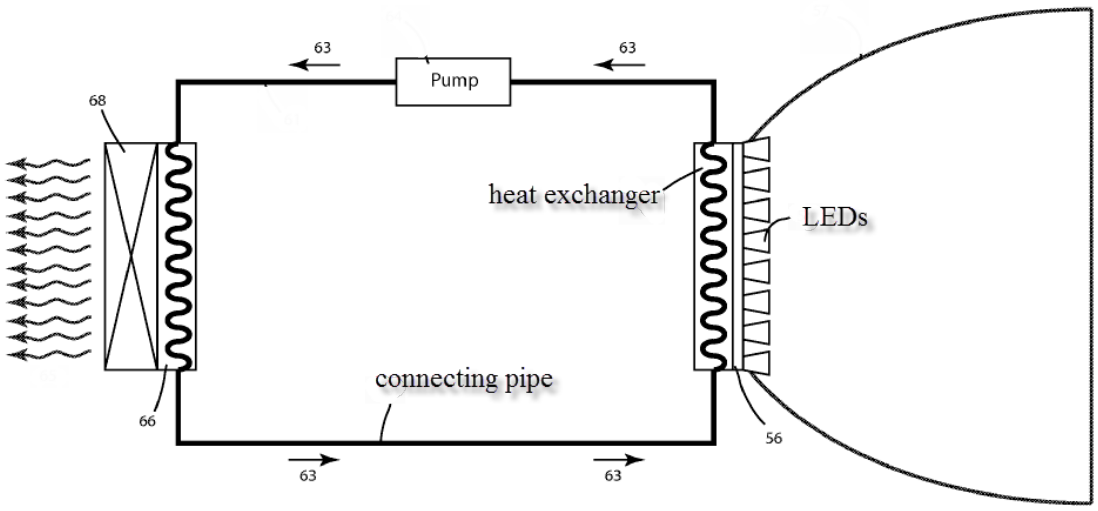

F21V 29/54

using thermoelectric means, e.g. Peltier elements

Definition statement

This place covers:

Illustrative examples of subject matter classified in this group:

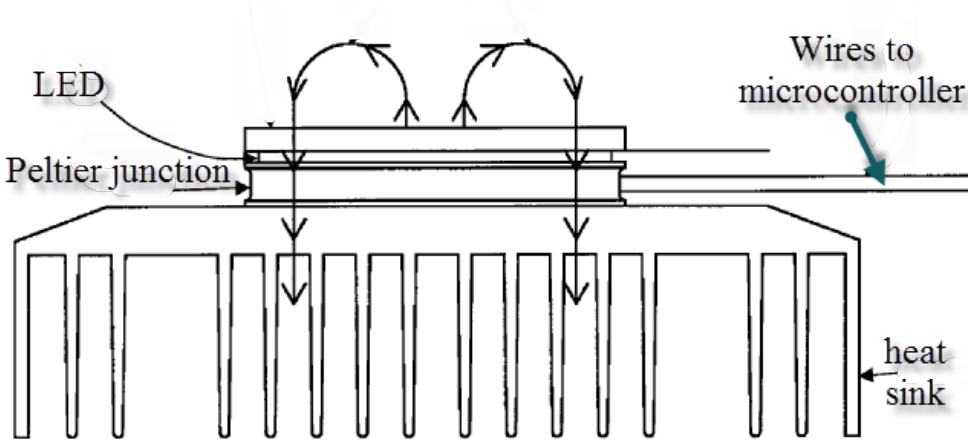

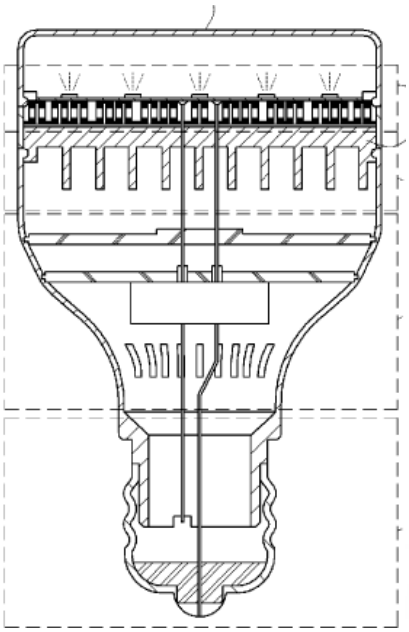

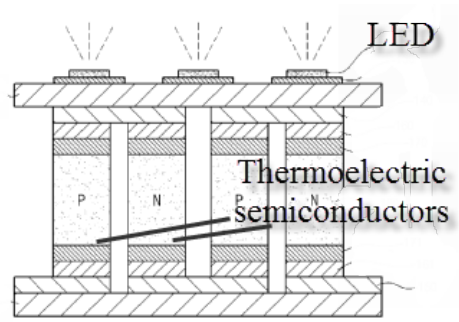

...

F21V 29/56

using liquid coolants (F21V 29/51 takes precedence)

Definition statement

This place covers:

The cooling by liquids without condensation or evaporation of the fluid

Below an illustrative example of subject matter classified in this group. In this example the thermally conductive liquid is permanently enclosed within the shell:

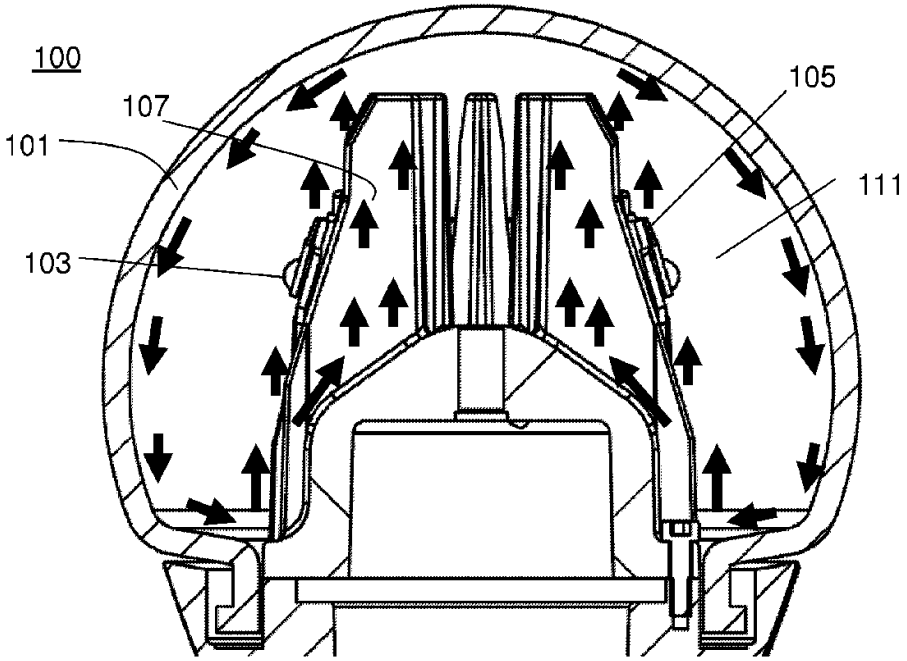

References

Limiting references

This place does not cover:

Cooling arrangements using condensation or evaporation of a fluid, e.g. heat pipes	F21V 29/51

F21V 29/63

using electrically-powered vibrating means; using ionic wind

Definition statement

This place covers:

Illustrative example of subject matter classified in this group:

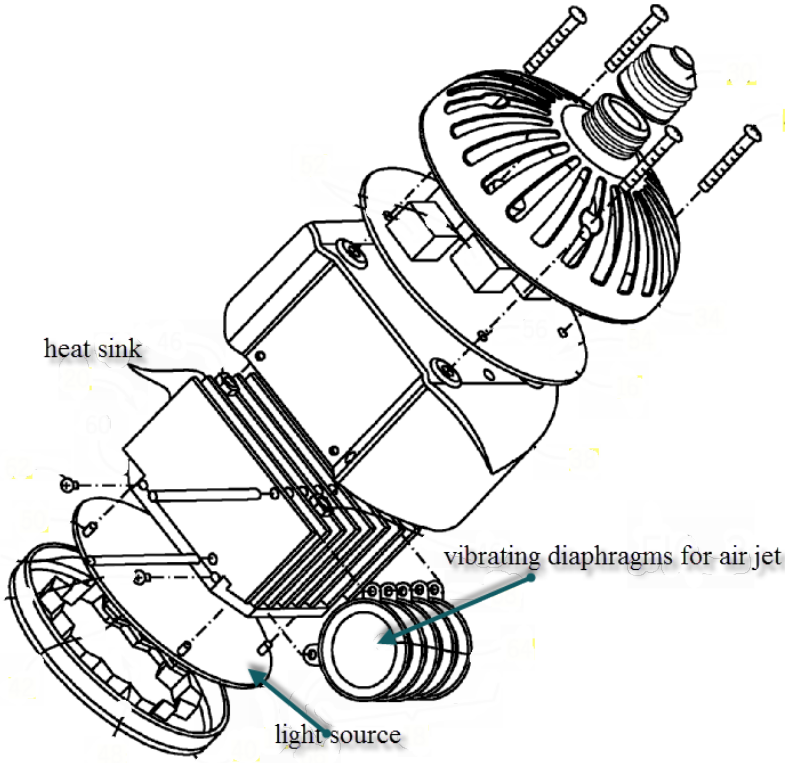

F21V 29/65

the gas flowing in a closed circuit

Definition statement

This place covers:

Illustrative example of subject matter classified in this group:

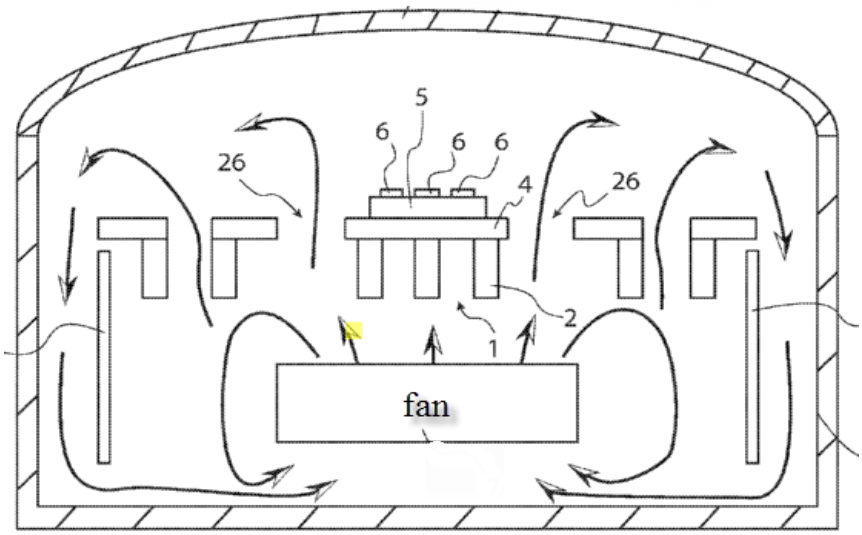

F21V 29/673

{the fans being used for intake}

Definition statement

This place covers:

Fans arranged in such a way that the warm air is moved away from the heat source after the air was heated by the heat source, i.e. the fans are arranged downstream from the light/heat sources in respect of the air flow.

Illustrative example of subject matter classified in this group:

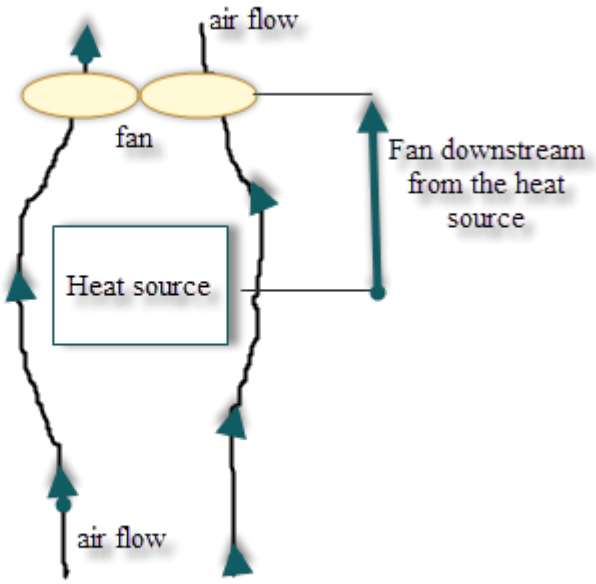

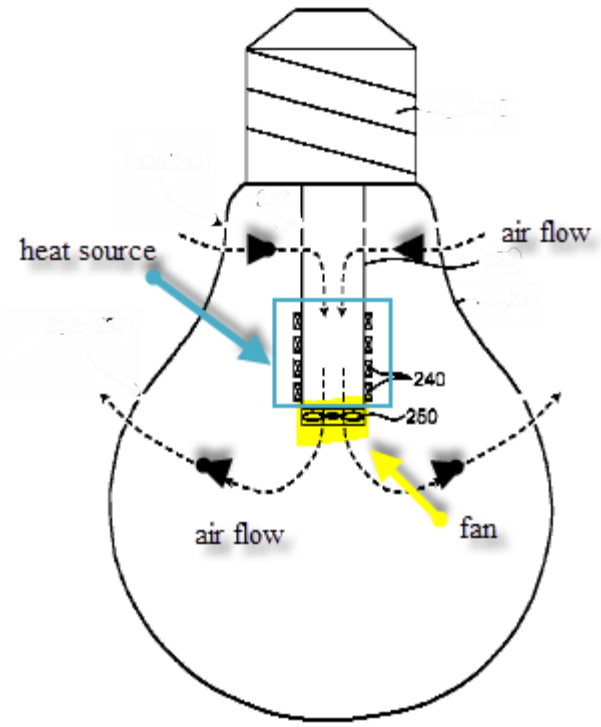

F21V 29/677

{the fans being used for discharging}

Definition statement

This place covers:

Fans arranged in such a way that they move cooling air in the direction of the heat or light sources, i.e. the fans are located upstream from the light sources in respect of the air the flow.

Illustrative examples of subject matter classified in this group:

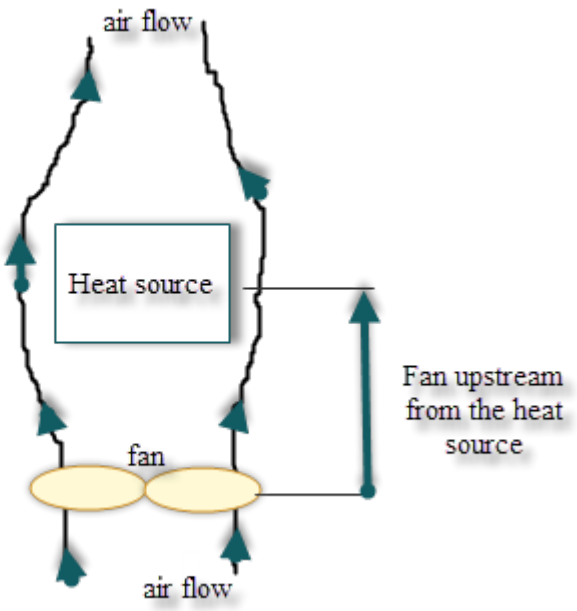

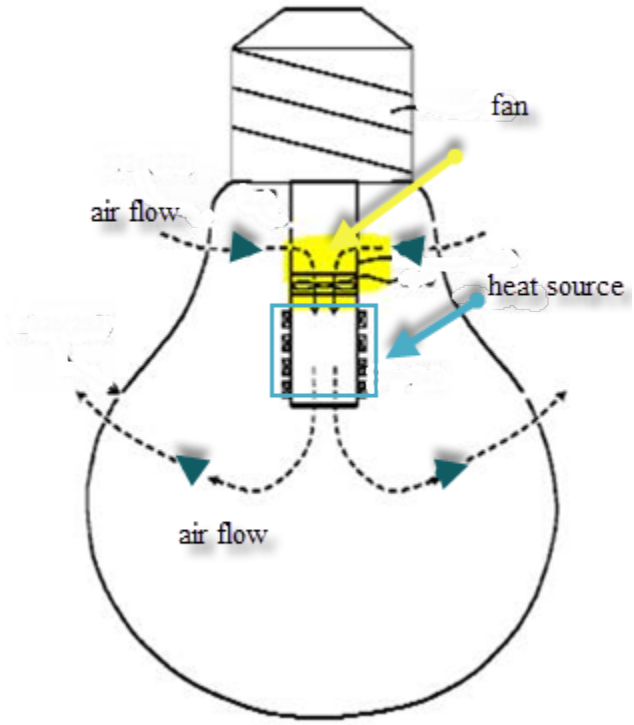

F21V 29/70

characterised by passive heat-dissipating elements, e.g. heat-sinks

Definition statement

This place covers:

Heat spreaders, i.e. thermal conducting element interconnecting the source of heat and the heat sink, in order spread the heat on a heat sink surface.

Illustrative example, e.g. a heat spreader for a printed circuit board supporting LEDs:

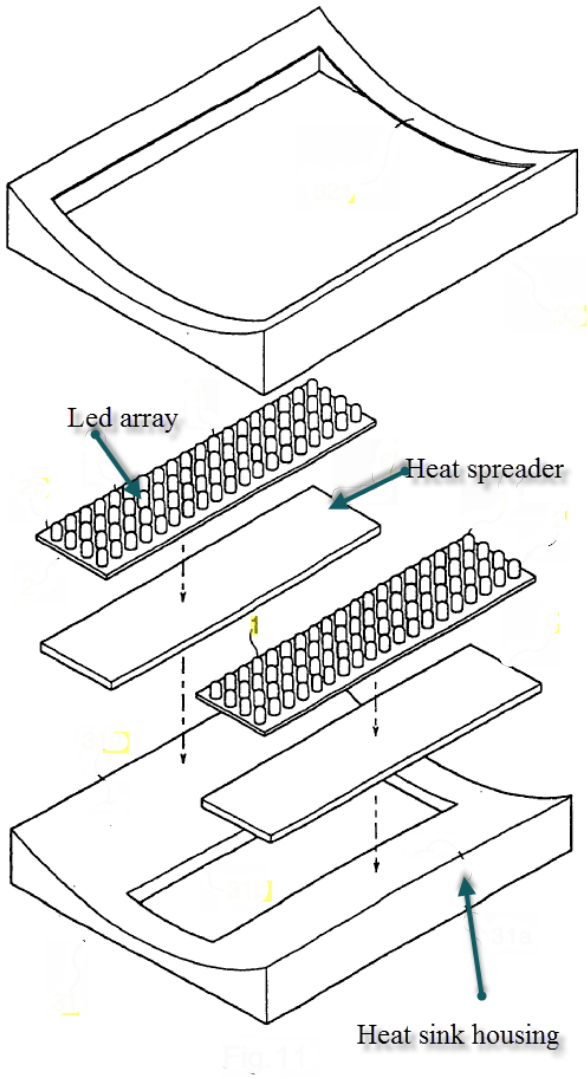

F21V 29/713

{in direct thermal and mechanical contact of each other to form a single system}

Definition statement

This place covers:

Heat sinks being built from multiple elements forming a single system where the elements are in direct thermal contact.

Illustrative example of subject matter classified in this group:

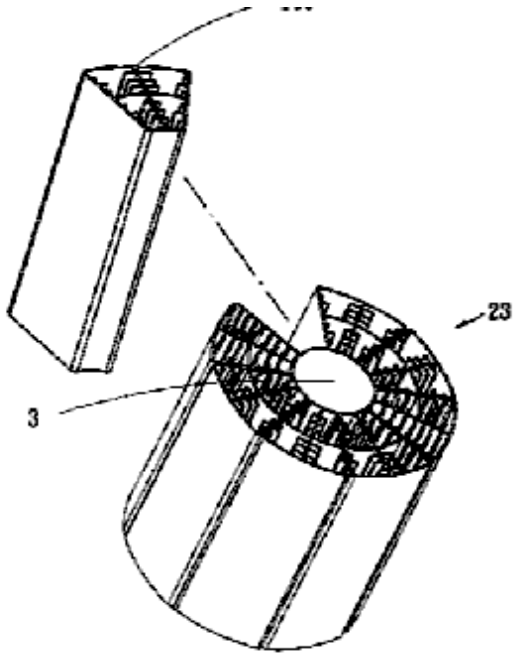

F21V 29/717

{using split or remote units thermally interconnected, e.g. by thermally conductive bars or heat pipes}

Definition statement

This place covers:

Separate heat sink units or split units connected by conductive bars or heat pipes.

Illustrative examples of subject matter classified in this group:

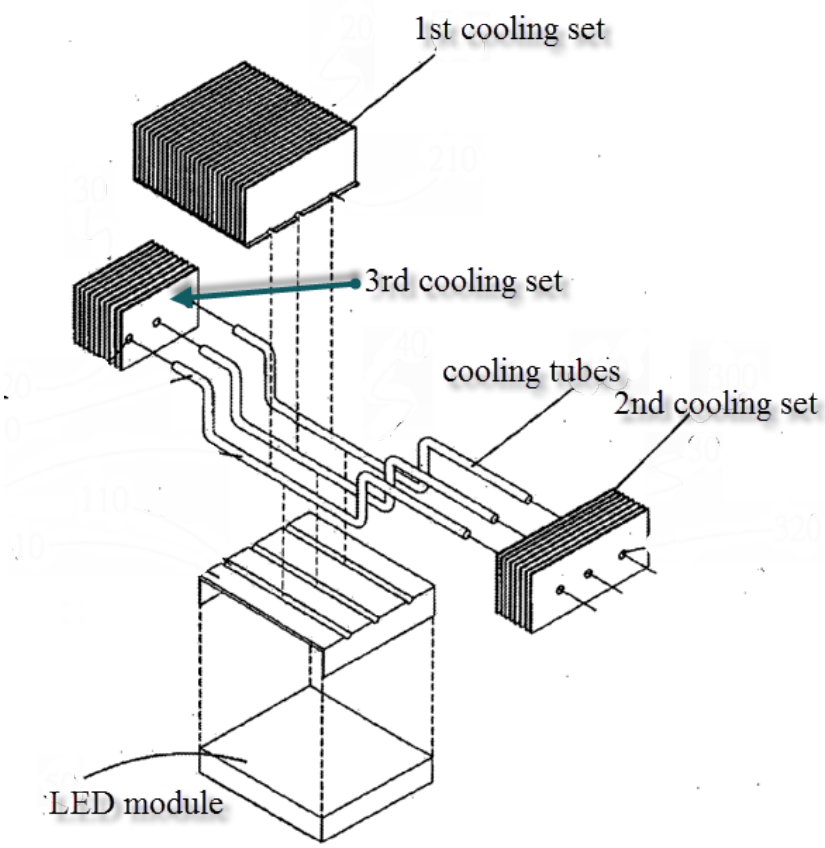

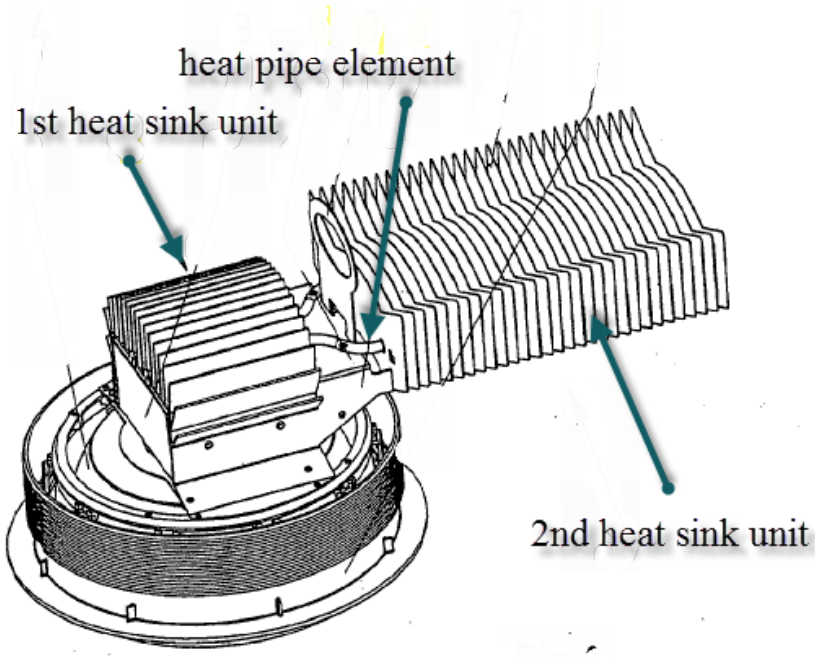

F21V 29/73

the elements being adjustable with respect to each other, e.g. hinged

Definition statement

This place covers:

Illustrative examples of subject matter classified in this group:

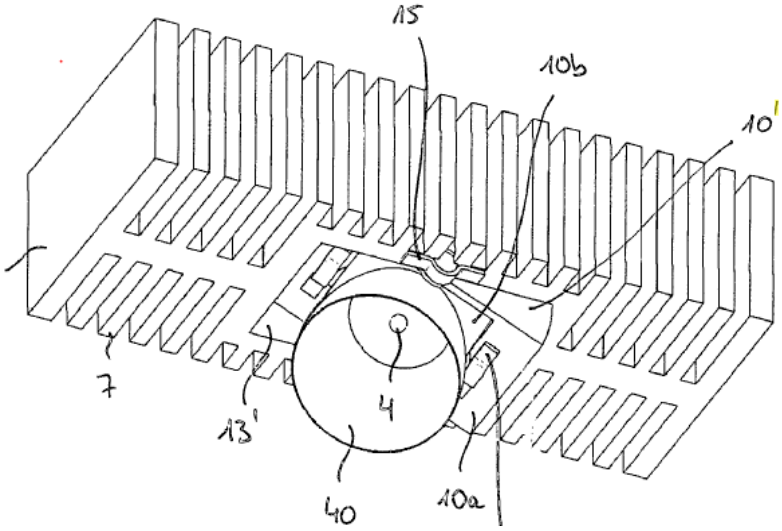

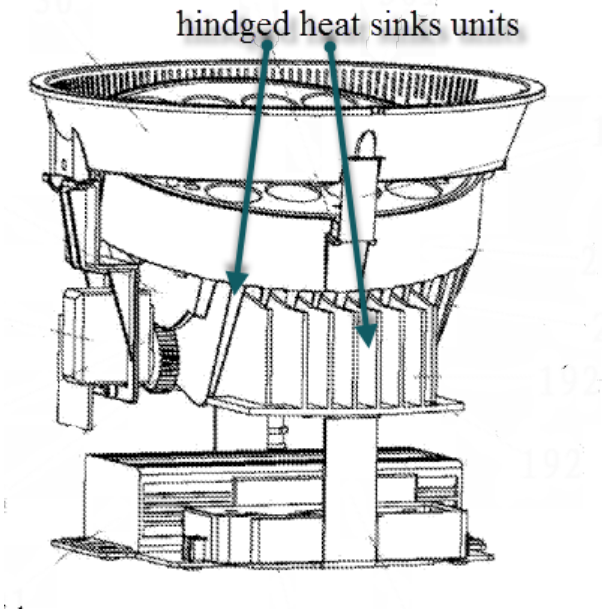

F21V 29/74

with fins or blades

Definition statement

This place covers:

Illustrative examples of subject matter classified in this group:

Fins/pins consisting of main fins/pins and supplementary fins/pins increasing the surface areas of the main fins/pins, e.g. snowflake-like profiles or fins with multi-branches.

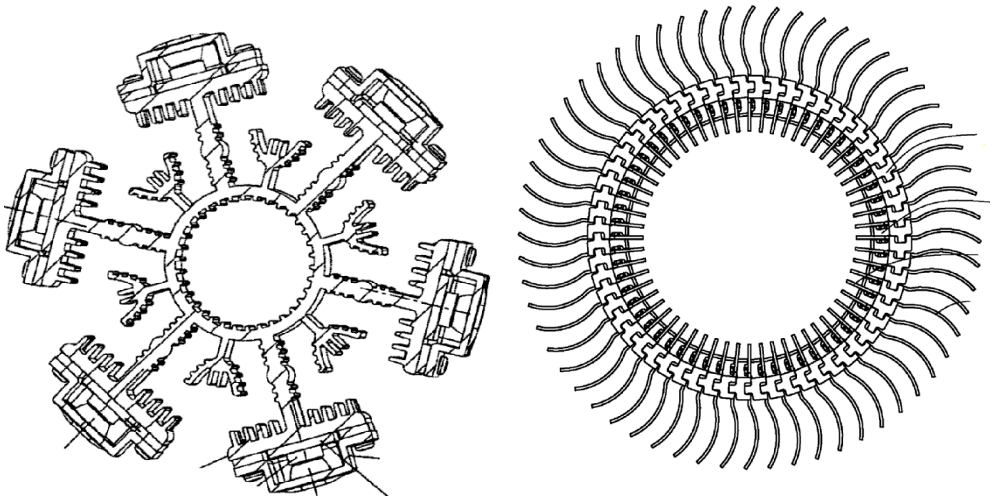

F21V 29/745

{the fins or blades being planar and inclined with respect to the joining surface from which the fins or blades extend}

Definition statement

This place covers:

Illustrative examples of subject matter classified in this group:

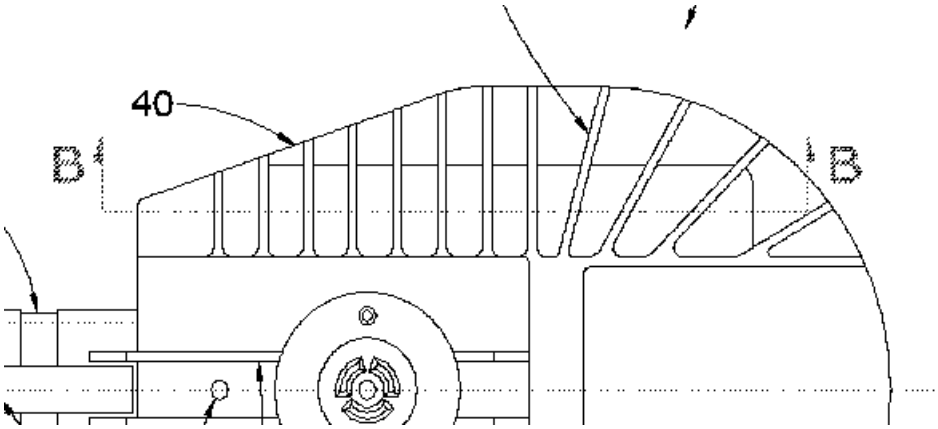

Fins not radially arranged on a cylinder:

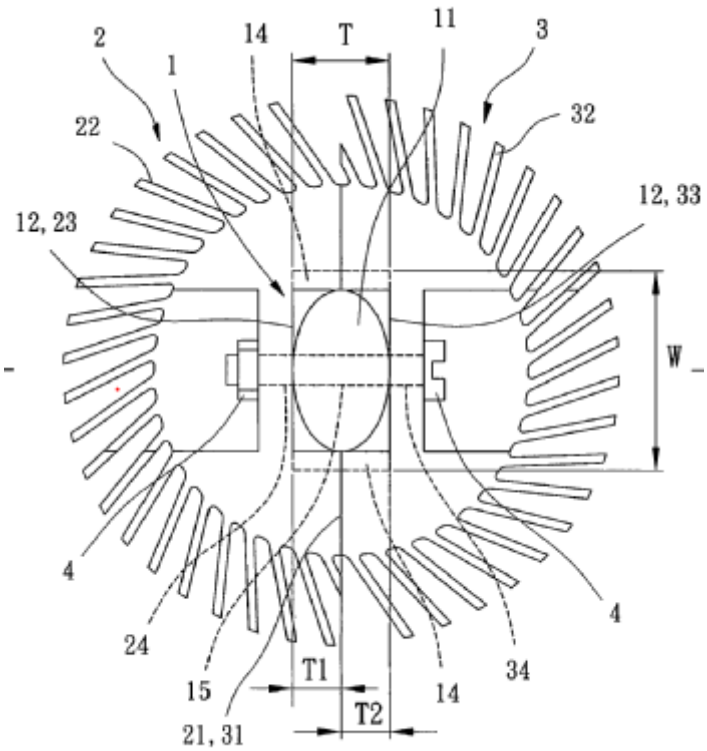

Parallel fins attached to a curved surface, therefore forming an angle with respect to the curved surface:

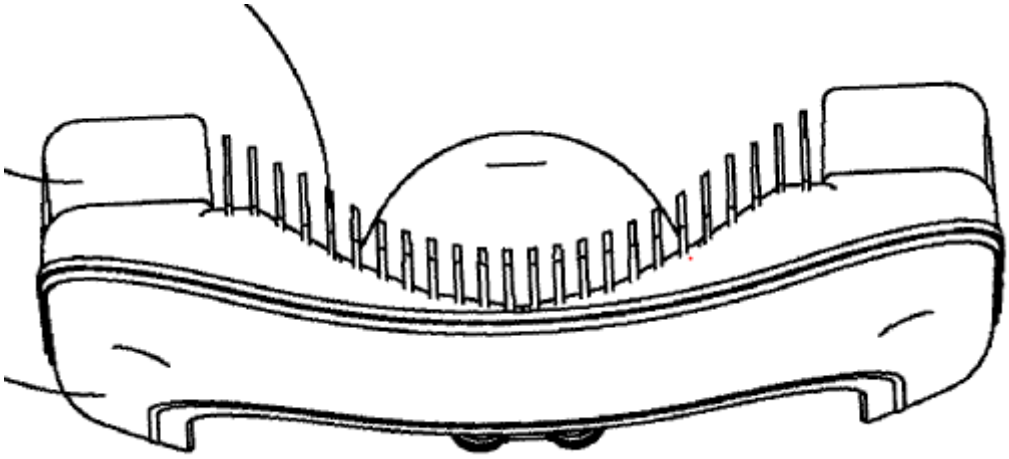

"V" shaped section fins attached at the tip to a surface:

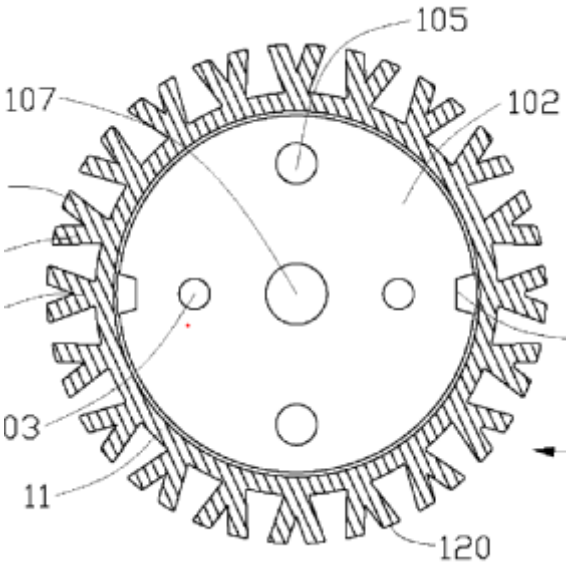

F21V 29/767

{the planes containing the fins or blades having directions perpendicular to the light emitting axis}

Definition statement

This place covers:

Illustrative example of subject matter classified in this group:

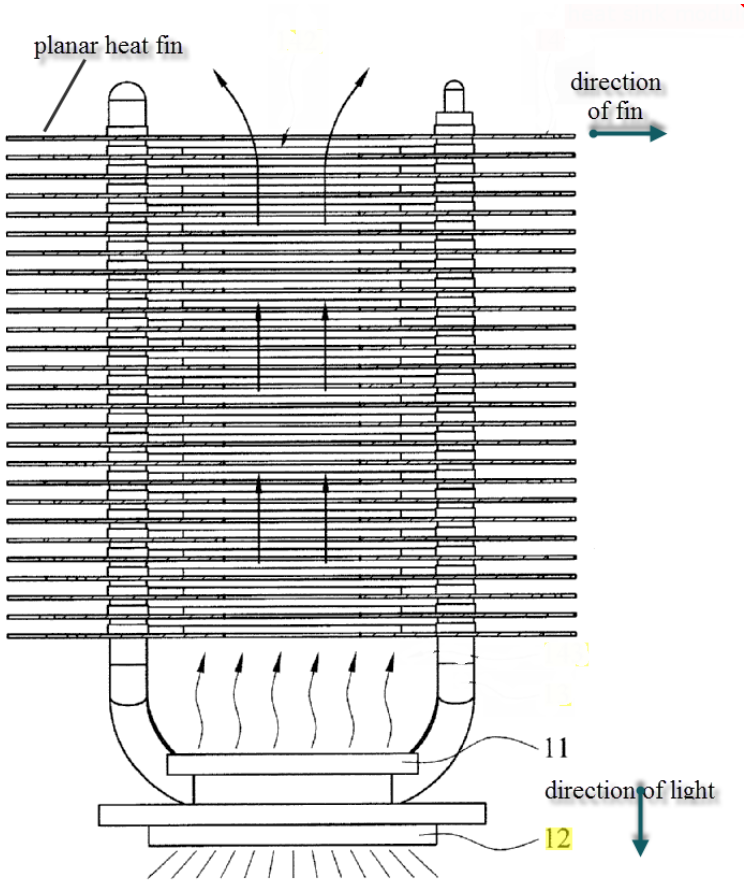

F21V 29/77

with essentially identical diverging planar fins or blades, e.g. with fan-like or star-like cross-section

Definition statement

This place covers:

Illustrative example of subject matter classified in this group:

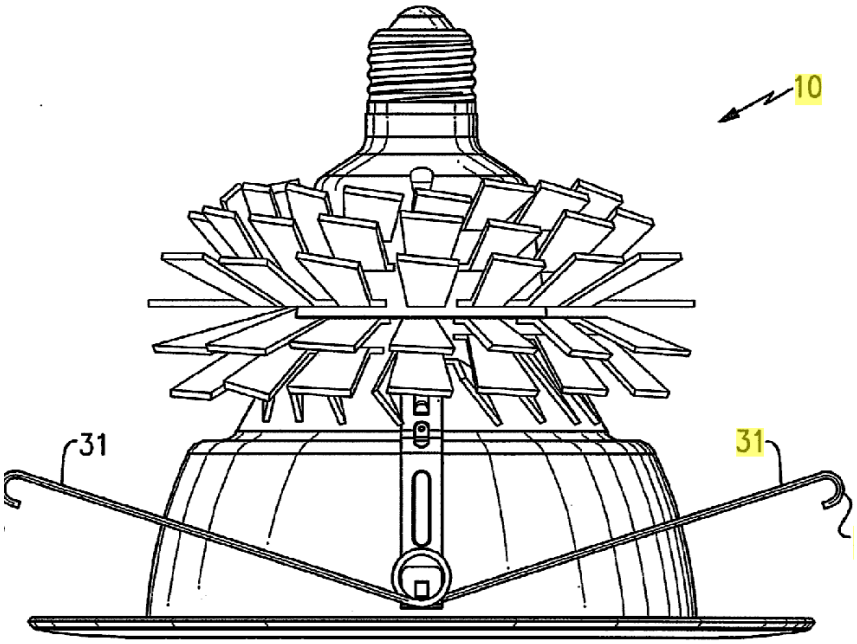

F21V 29/773

{the planes containing the fins or blades having the direction of the light emitting axis}

Definition statement

This place covers:

The direction of fins or blades on the supporting plane are parallel to the axis of the emitted light.

Illustrative example of subject matter classified in this group:

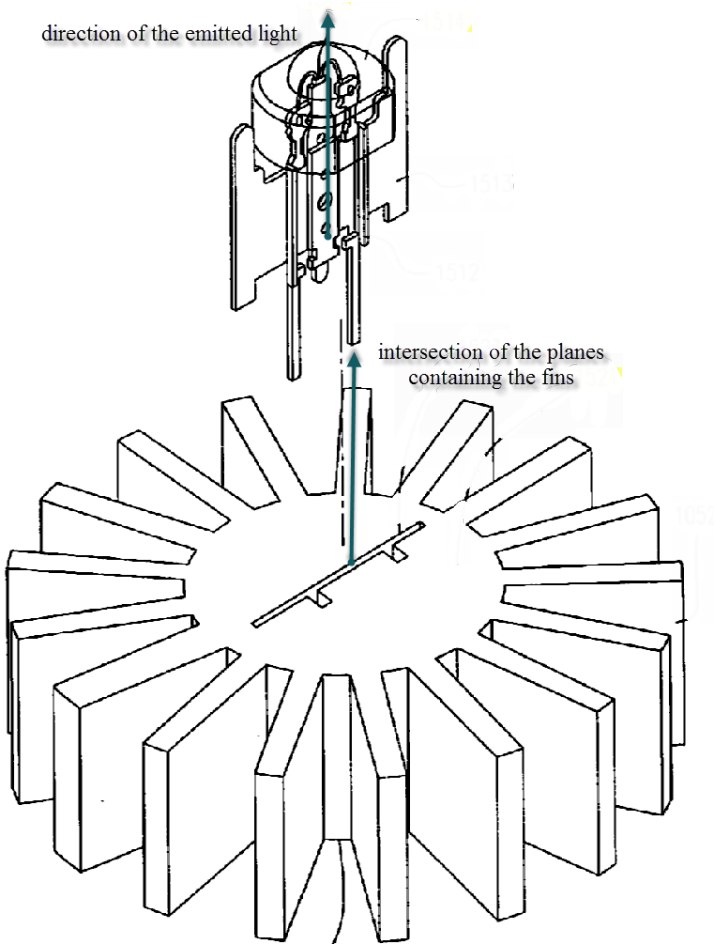

F21V 29/777

{the planes containing the fins or blades having directions perpendicular to the light emitting axis}

Definition statement

This place covers:

The fins or blades are supported on planes which are perpendicular to the direction of the emitted light, i.e. that the extension of the fins or blades from the supporting plane are parallel to the direction of light.

Illustrative example of subject matter classified in this group:

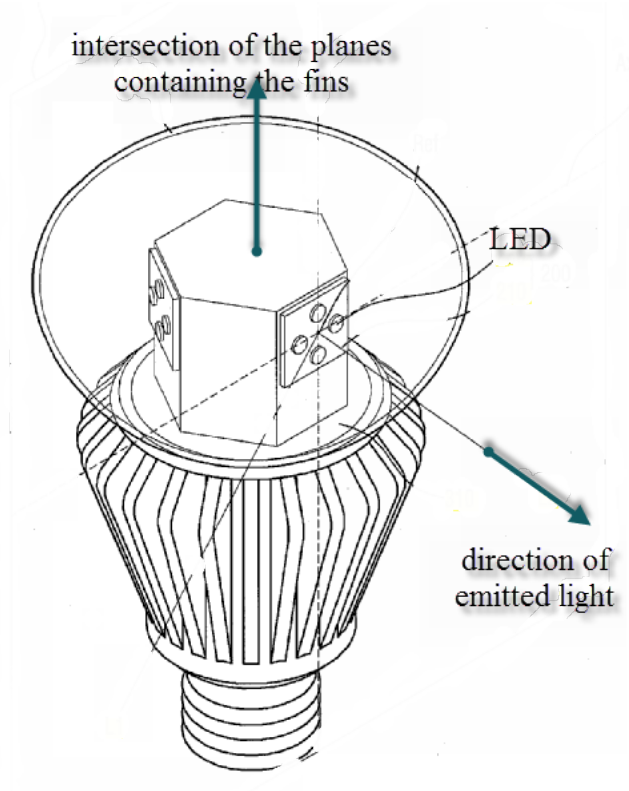

F21V 29/78

with helically or spirally arranged fins or blades

Definition statement

This place covers:

Illustrative example of subject matter classified in this group:

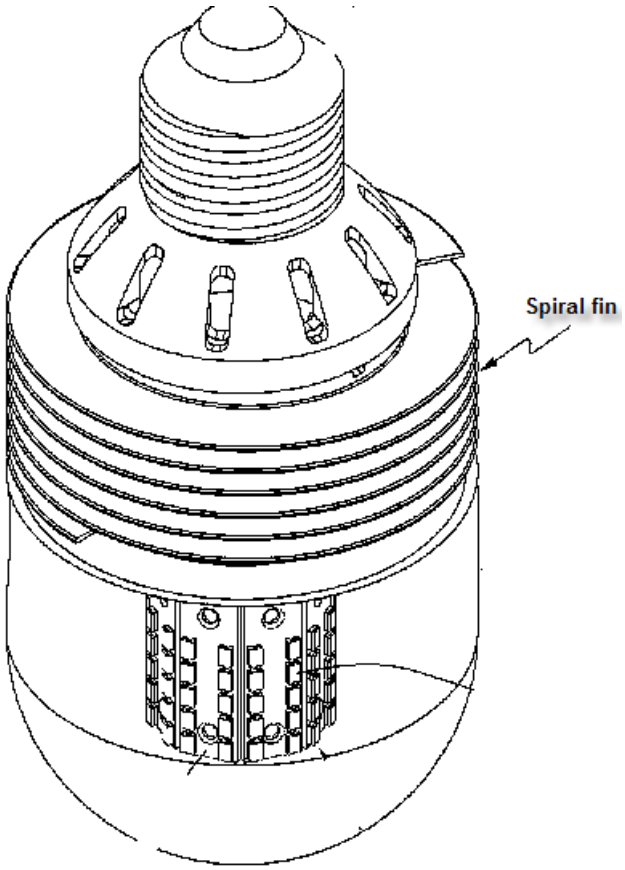

F21V 29/80

with pins or wires

Definition statement

This place covers:

Illustrative examples of subject matter classified in this group:

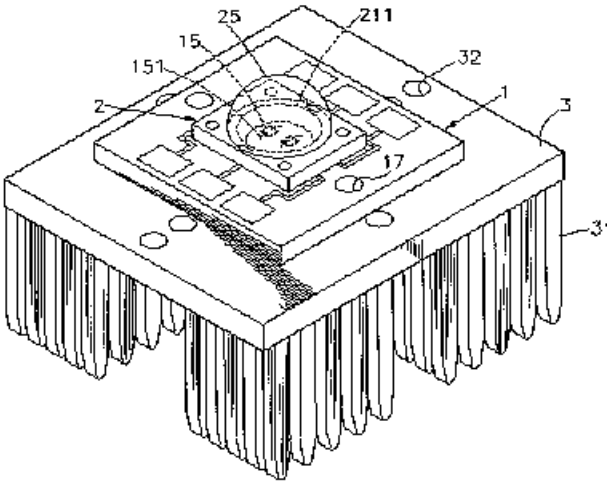

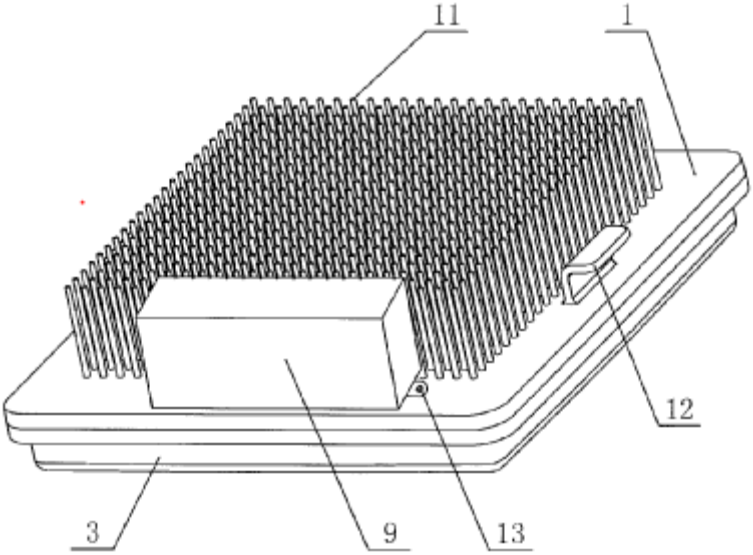

F21V 29/81

with pins or wires having different shapes, lengths or spacing

Definition statement

This place covers:

Illustrative example of subject matter classified in this group:

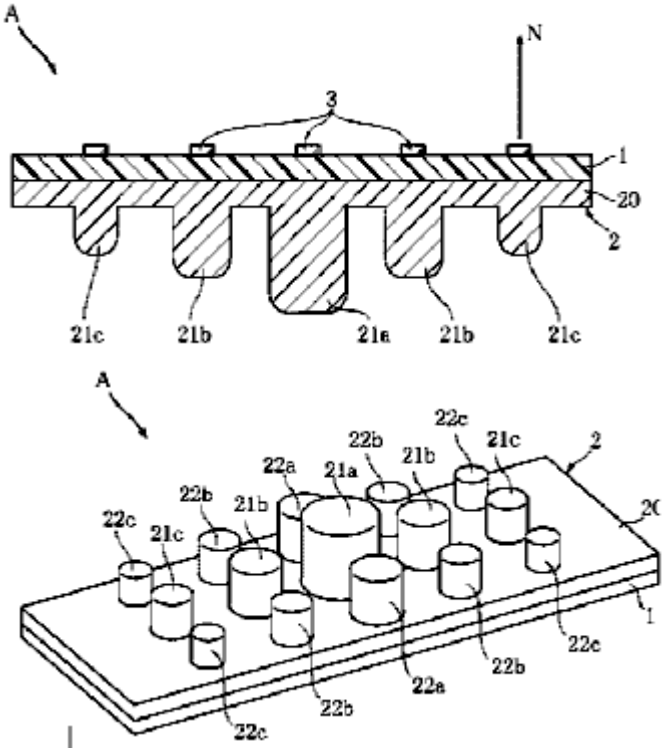

F21V 29/83

the elements having apertures, ducts or channels, e.g. heat radiation holes

Definition statement

This place covers:

Illustrative examples of subject matter classified in this group:

Channels formed in the mass of the heat sink

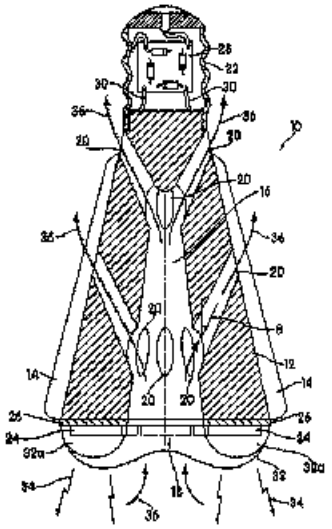

Interconnected fins (124) forming channels (122):

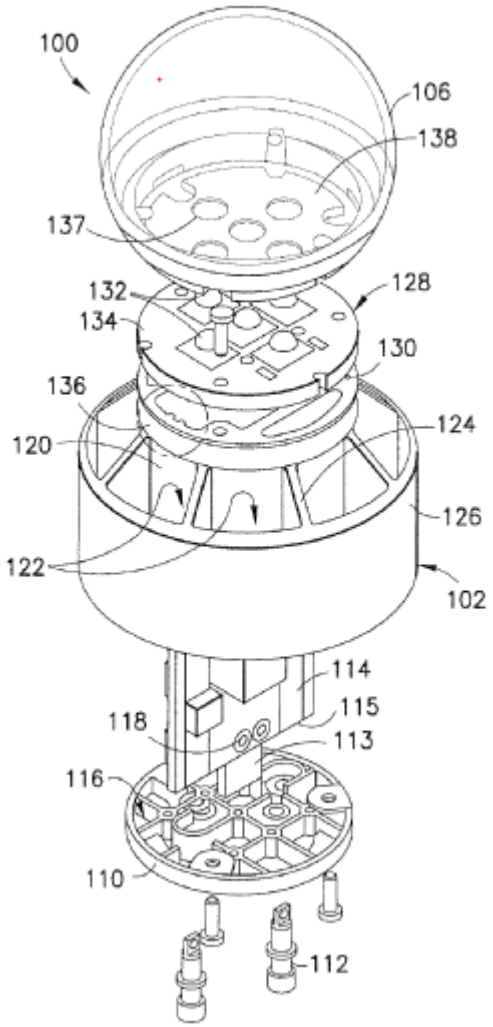

F21V 29/85

characterised by the material (liquid coolants F21V 29/56)

Definition statement

This place covers:

Special materials, e.g. for allowing flexibility, bendability and foldability of a heat exchanger

Illustrative example of subject matter classified in this group:

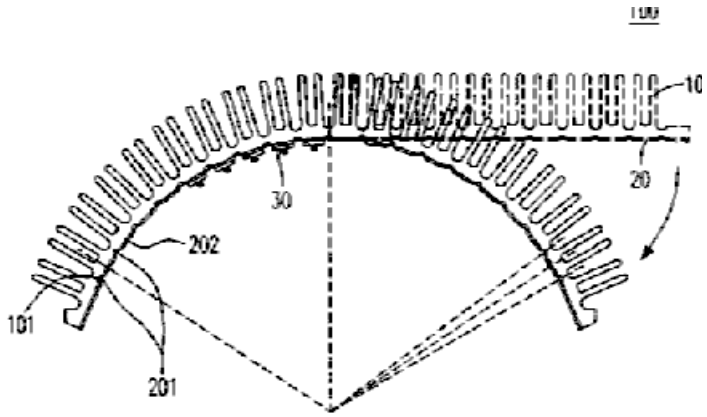

References

Informative references

Attention is drawn to the following places, which may be of interest for search:

Liquid coolants	F21V 29/56

F21V 29/90

Heating arrangements

Definition statement

This place covers:

Illustrative example of subject matter classified in this group:

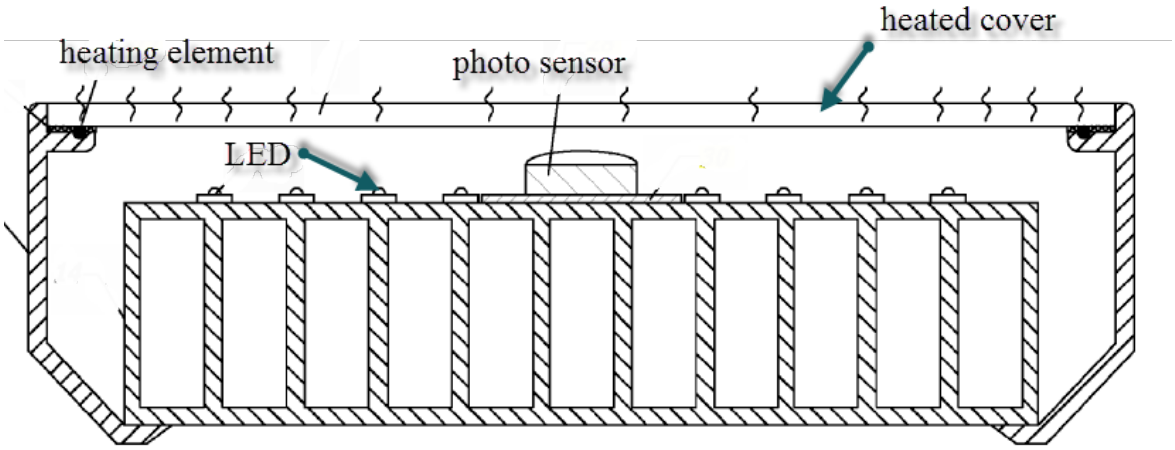

References

Application-oriented references

Examples of places where the subject matter of this place is covered when specially adapted, used for a particular purpose, or incorporated in a larger system:

Heating arrangements for gas- or vapour-discharge lamps	H01J 61/52

F21V 31/00

Gas-tight or water-tight arrangements

Definition statement

This place covers:

Sealing of lighting device housings

References

Informative references

Attention is drawn to the following places, which may be of interest for search:

Safety devices structurally associated with lighting devices	F21V 25/00
Cable-stowing arrangements structurally associated with lighting devices; cable inlets	F21V 27/02
Cooling devices	F21V 29/00
Waterproofing of vehicle headlamps and signal lamps	F21S 48/33
Casings, cabinets or drawers for electric apparatus; Hermetically-sealed casings	H05K 5/06

F21V 31/04

Provision of filling media

Definition statement

This place covers:

e.g.US2011085334

LED illuminating device with a transparent epoxy resin filling the shell to sealedly envelope the printed circuit board

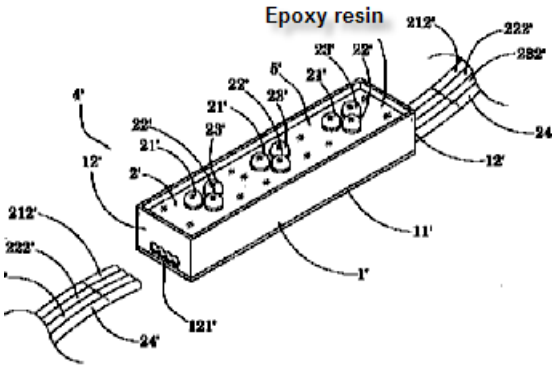

References

Informative references

Attention is drawn to the following places, which may be of interest for search:

Safety devices	F21V 25/00
Cooling arrangements	F21V 29/00

F21V 33/00

Structural combinations of lighting devices with other articles, not otherwise provided for

Definition statement

This place covers:

e.g.US2006109651

Illuminated banners or flags (G09F 17/00: banners or flags)

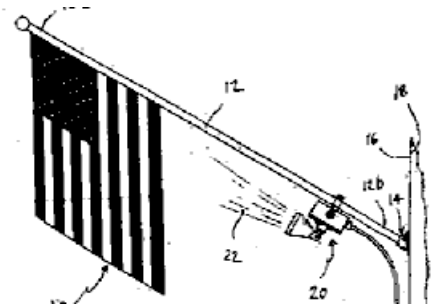

e.g.WO9742449

Illuminated flagpoles (E04H 12/32: flagpoles)

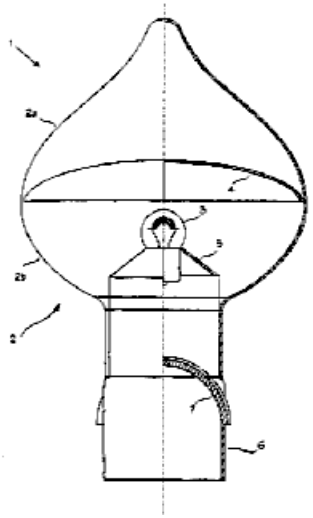

References

Application-oriented references

Examples of places where the subject matter of this place is covered when specially adapted, used for a particular purpose, or incorporated in a larger system:

Lights for cultivation in receptacles, forcing frames, greenhouses	A01G 9/20
Light emitting leads or collars	A01K 27/003, A01K 27/006
Aquaria	A01K 63/06
Fishing nets	A01K 75/02
Fishing baits	A01K 85/01
Rods with build-in accessories, e.g. lighting means or measuring devices	A01K 87/007
Catching insects	A01M 1/04
Baker's ovens	A21B 3/10, **F21S8/00G**
Gloves; Protective gloves with luminous or reflective means	A41D 19/0157
Luminous or luminescent artificial flowers, fruit, leaves, or trees	A41G 1/005
Helmet with lighting devices	A42B 3/0433
Footwear having light sources	A43B 3/001
Illuminated buckles	A44B 11/2565
Illuminated jewellery	A44C 15/0015
Sticks	A45B 3/02
Bags, purses, or the like	A45C 15/06
Toilet or cosmetic powder containers	A45D 33/32
Shaving mirrors	A45D 42/10
Adaptations for incorporating lamps to chairs	A47C 7/72
Attachments for beds; Lighting, radio, telephone or the like connected to the bedstead	A47C 21/003
Show cases or show cabinets with lighting devices	A47F 3/001
Show windows or showcases	A47F 11/10
Picture frames with illumination	A47G 1/0622
Illuminated underlays for glasses or drinking vessels	A47G 23/0309
Suction cleaners	A47L 9/30
Medical instruments for examining body cavities or tubes	A61B 1/00
Dental machines for boring or cutting; Machine parts specially adapted for dentistry; Illuminating devices or attachments	A61C 1/088
Curing dental plastics prostheses by light action	**A61C13/15**
Massage adapted for simultaneous treatment with light	A61H 15/02
Radiation therapy	A61N 5/06
Clubs	A63B 15/02
Illuminated balls	A63B 43/06
Roller skates or skate boards	A63C 17/26
Tops	A63H 1/24

Toy vehicles	A63H 17/28
Model railways	A63H 19/20
Spanners, wrenches, screwdrivers	B25B 23/18
Guiding devices for portable power. driven tools	B25F 5/021
Hair clippers or dry shavers	B26B 19/46
Accessories for razors	B26B 21/46
Photographic composing machines	B41B 21/08
Typewriters or selective printing machines	B41J 29/19
Support for notepads with light emitting devices	B42D 5/007
Writing implements	B43K 29/10
Lamps for baking lacquers used in painting or artistic drawing	B44D 3/24
Vehicle lighting or signalling	B60Q
Railway vehicles	B61D 29/00
Railway light signals	B61L 5/18
Points, form signals or gates	**B61J9/00**
Cycles	B62J 6/00
Ships	B63B 45/00
Life-buoys, life-belts, lifejackets	B63C 9/20
Aircraft	B64D 47/02
Closures being provided with transient audible or visual signaling means, e.g. illuminating devices	B65D 51/248
Main component parts of lifts in, or associated with, buildings or other structures; cars and travelling platforms (doors, gates or other apparatus controlling access to or exit from cars; Constructional features, e.g. walls assembly, decorative panels, comfort equipment, thermal or sound insulation; Lighting systems.	B66B 11/0233
Apparatus for transferring liquids	**B67D5/66**
Sewing machines	D05B 79/00
Road signs	E01F 9/615
Road surface markings	E01F 9/547
Tents or canopies	E04H 15/10
Locks or keys	E05B 17/10
Stove illumination	F24C 7/082
Air conditioning systems	F24F 3/056
Outlets for directing air into rooms or spaces combined with lighting fixtures	F24F 13/078
Cooling or freezing apparatus	F25D 27/00
Furnaces, kilns, ovens or retorts	F27D 21/02
Night sights	F41G 1/35
Levels	G01C 9/32
Compasses	G01C 17/24

Measuring arrangements	G01D 11/28
Weighting apparatus	G01G 23/30
Thermometers	G01K 1/06
Speedometers	G01P 1/08
Instruments for measuring	G01R 1/08
Microscopes	G02B 21/06
Magnifying glasses	G02B 25/02
Viewing or reading apparatus	G02B 27/02
Light pointers	G02B 27/20
Optical instruments	G02B 27/34
Spectacles	G02C 11/04
Liquid crystals	G02F 1/1335
Electrochromic cells	G02F 1/157
Illuminating scenes for taking photographs	G03B 15/02
Cameras	G03B 15/03
Contact photographic printing	G03B 27/16
Projection photographic printing	G03B 27/54
Clocks	G04B 19/30
Time indicated by electric lamps	G04C 17/02
Time signalling by electric lamps	G04C 19/02
Visible signalling or calling systems	G08B 5/36
Actuation of fire alarms	G08B 17/103
Traffic lights	G08G 1/095
Illuminated signs	G09F 13/00
Advertising or display means on roads or walls	G09F 19/22
Aircraft advertising	G09F 21/10, G09F 21/14
Advertising on ships	G09F 21/20
- Illuminated advertising on or in specific articles	G09F 23/04
Indicating elements or instruments	G12B 11/00
Illuminated switches	H01H 13/83
Indicating lamps in circuit-breaker switches	H01H 73/14
Indicating lamps in fuse	H01H 85/32
Lighting of aerials	H01Q 1/06
Coupling devices with build-in light bulbs	H01R 13/717
Pulse counter or frequency divider indicators using glow-discharge lamps	H03K 21/20
Illuminating of telephone substation equipment	H04M 1/22

Special rules of classification

Document classified here has to be forwarded to the field corresponding to the article in which the lighting device is integrated

F21V 33/0012

{Furniture (hospital beds F21V 33/0072)}

References

Limiting references

This place does not cover:

Hospital beds	F21V 33/0072

Informative references

Attention is drawn to the following places, which may be of interest for search:

Devices for lighting show cases or show cabinets	A47F 3/001
Arrangements of light sources in shop window	A47F 11/10

Special rules of classification

In this subclass, it is desirable to add the Indexing Code F21W 2131/301

F21V 33/0016

{Furnishing for windows and doors (sunshades F21V 33/006)}

References

Limiting references

This place does not cover:

Sunshades	F21V 33/006

F21V 33/0024

{Household or table equipment}

Definition statement

This place covers:

e.g.US6033084

Retrofittable mailbox light system (A47G 29/12, A47G 29/1212: Mail or newspaper receptacles)

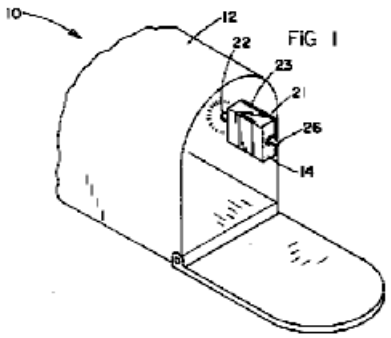

F21V 33/0032

{Paintings, pictures or photographs; Frames therefor}

References

Limiting references

This place does not cover:

Picture frames with illumination	A47G 1/0622

F21V 33/0036

{Table-ware or table equipment, e.g. dishes, cutlery or trays}

Definition statement

This place covers:

Illuminated table-ware, spoons, pastry servers

e.g.US2009147503

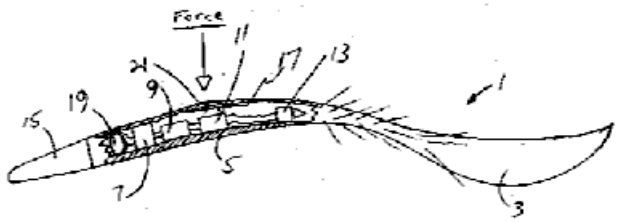

Figure 1

References

Informative references

Attention is drawn to the following places, which may be of interest for search:

Drinking vessels or saucer used for table service with illumination means	A47G 2019/2238

F21V 33/004

{Sanitary equipment, e.g. mirrors, showers, toilet seats or paper dispensers}

Definition statement

This place covers:

Illustrative example of subject matter covered in this group.

e.g.EP2158972 - Illuminated shower heads

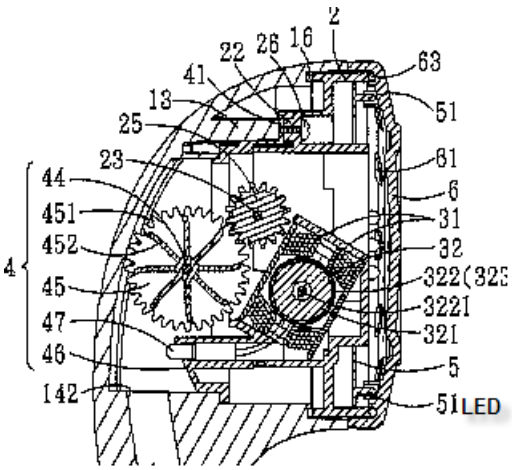

References

Limiting references

This place does not cover:

Small mirrors (hand, pocket, cosmetic or shaving mirrors)	A45D 42/10
Brushes with additional arrangements	A46B 15/00
Mirrors for household (also bathroom)	A47G 1/02
Mirrors for medical purposes (e.g. dentistry)	A61B 1/247
Rear mirrors for vehicles	B60R 1/00

Informative references

Attention is drawn to the following places, which may be of interest for search:

Nozzles, spray heads or other outlets, with or without auxiliary devices such as valves, heating means	B05B 1/00

F21V 33/0044

{Household appliances, e.g. washing machines or vacuum cleaners}

References

Informative references

Attention is drawn to the following places, which may be of interest for search:

Refrigerators; cold rooms; ice-boxes; cooling or freezing apparatus not covered by any other subclass; lighting arrangement	F25D 27/00

Special rules of classification

In this , it is desirable to add the Indexing Codes of F21W 2131/305 for illumination for refrigerators

F21V 33/0048

{Office articles, e.g. bookmarks, desk lamps with drawers, stands for books or music scores}

Special rules of classification

In this subclass, it is desirable to add the Indexing Codes of F21W 2131/3005 for reading lights attachable to books

F21V 33/0056

{Audio equipment, e.g. music instruments, radios or speakers}

References

Informative references

Attention is drawn to the following places, which may be of interest for search:

Details of transducers, loudspeakers or microphones	**H01R1/00**

F21V 33/006

{General building constructions or finishing work for buildings, e.g. roofs, gutters, stairs or floors; Garden equipment; Sunshades or parasols}

Definition statement

This place covers:

Stairs with illumination (E04F 11/00)

Illuminated tiles (E04F 15/00)

e.g.WO2010092509

Carpets; Stair runners; Bedside rugs; Foot mats (A47G 27/02)

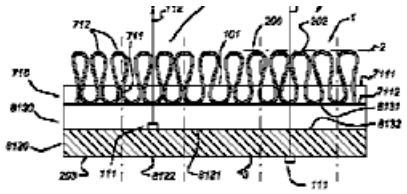

e.g.US2004212997

Sunshade, patio umbrella

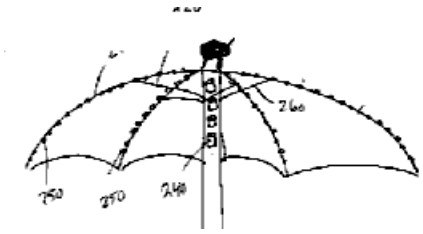

e.g.DE202010000087U

Illuminated handle for door, drawer

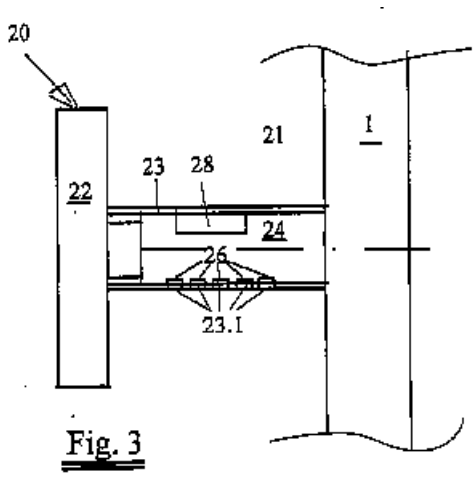

Fig. 3

e.g.DE102007057214

Drain gutter with illumination

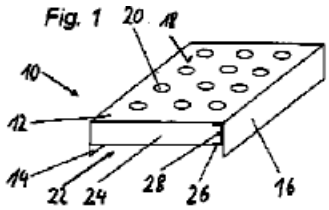

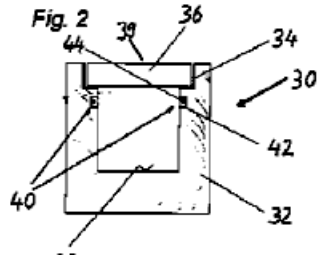

e.g.WO2011055488

Illuminated handrail (E04F 11/00)

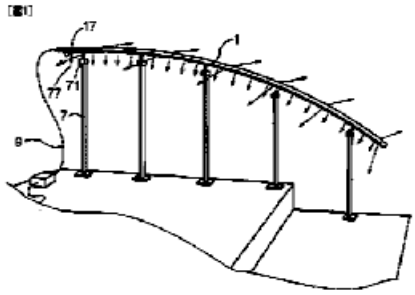

e.g.US2007175599

Illuminated window blind assembly (E06B 9/386)

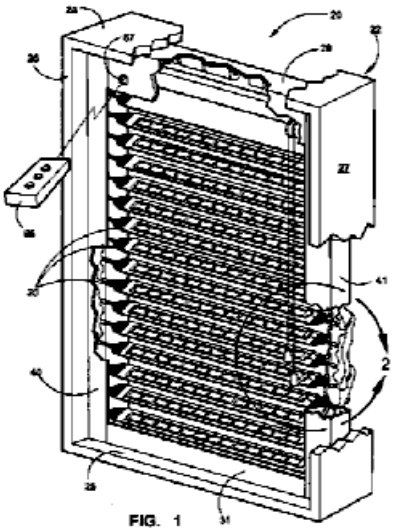

References

Limiting references

This place does not cover:

Illuminated umbrella	F21V 33/0004

Informative references

Attention is drawn to the following places, which may be of interest for search:

General building constructions; walls; roofs; floors, ceiling, insulations or other protection of buildings	E04B
Finishing work on buildings, e.g. stairs, floors	E04F
Fixed or movable closures for openings in building, fences, e.g. doors, windows, blinds, gates	E06B

Special rules of classification

In this subclass, it is desirable to add the Indexing Codes of subclasses F21W 2111/08 for illuminated handrails

F21V 33/0076

{Safety or security signalisation, e.g. smoke or burglar alarms, earthquake detectors; Self-defence devices}

Definition statement

This place covers:

Illumination associated with smoke detector (G08B 17/10)

Illumination associated with burglar alarm detector (G08B 13/00)

e.g.WO2011042020

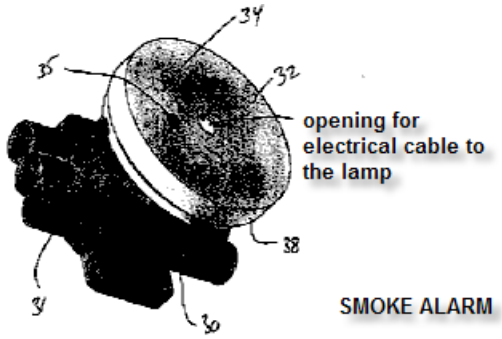

Relationships with other classification places

Sighting devices, night sights, e.g. luminescent, combined with light source, e.g. spot-light for illuminating the target, e.g. flash lights or not covered by this group and classified in F41G 1/35

F21V 33/008

{Leisure, hobby or sport articles, e.g. toys, games or first-aid kits; Hand tools; Toolboxes}

Definition statement

This place covers:

Illumination for barbecues

Illumination for first aid kits or toolboxes

e.g.US2004228117

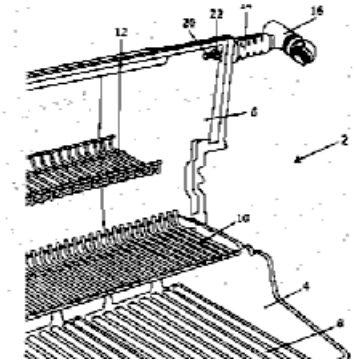

References

Informative references

Attention is drawn to the following places, which may be of interest for search:

Apparatus for physical training, gymnastics, swimming, climbing or fencing; ball games; training equipment	A63B
Skates; skis; roller skates, design or layout or courts, rinks or the like	A63C
Toys, e.g. tops, dolls, hoops, building blocks	A63H

F21V 33/0088

{Ventilating systems (lighting fixtures combined with outlets for air treatment systems F24F 13/078)}

References

Informative references

Attention is drawn to the following places, which may be of interest for search:

Lighting fixtures combined with outlets for air treatment systems	F24F 13/078

F21V 33/0096

{Fans, e.g. ceiling fans (forced cooling of lighting devices characterised by the arrangement of fans F21V 29/67)}

Definition statement

This place covers:

Combined light fitting and ceiling fans

e.g.WO2007006096

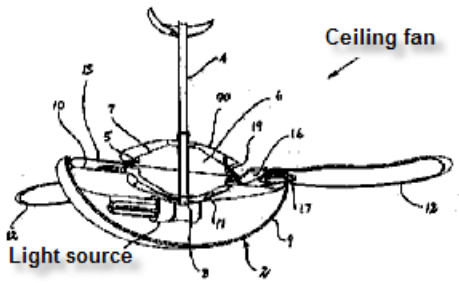

References

Limiting references

This place does not cover:

Air forced cooling for lighting devices	F21V 29/02

Informative references

Attention is drawn to the following places, which may be of interest for search:

Ceiling fans	F04D 25/088

F21V 35/00

Candle holders

References

Informative references

Attention is drawn to the following places, which may be of interest for search:

Candles per se	C11C 5/00
Non-electric lighting devices or systems employing a point-like light source	F21S 13/00

Special rules of classification

In this subclass, it is desirable to add the Indexing Codes of F21W 2121/002 for candle holders for birthday or anniversary cakes

F21V 35/003

{Special means for attaching the candle to the candle holder}

References

Limiting references

This place does not cover:

Fastening of light sources or lampholders	F21V 19/00

F21V 36/00

Arrangements of mantles or other incandescent bodies on burners

References

Informative references

Attention is drawn to the following places, which may be of interest for search:

Attaching to lamp parts	F21V 19/06

F21V 37/00

Details of lighting devices employing combustion as light source, not otherwise provided for; Night lamps; Votive lamps

References

Informative references

Attention is drawn to the following places, which may be of interest for search:

Burners for combustion of a gas	F23D 14/00

F21V 37/0025

{vegetal (F21V 37/0033 takes precedence)}

References

Limiting references

This place does not cover:

Combination of mineral and vegetal	F21V 37/0033

F21V 37/0029

{mineral (F21V 37/0033 takes precedence)}

References

Limiting references

This place does not cover:

Combination of mineral and vegetal	F21V 37/0033

F21V 37/0079

{Fastening of chimneys (F21V 37/0087 takes precedence)}

References

Limiting references

This place does not cover:

Devices for lifting chimneys or cover glasses	F21V 37/0087

F21V 37/0083

{Fastening of cover glasses (F21V 37/0087 takes precedence)}

References

Limiting references

This place does not cover:

Devices for lifting chimneys or cover glasses	F21V 37/0087

F21V 37/02

Special adaptation for protection against draughts {(for lanterns F21L 19/006); Draft controllers}

References

Informative references

Attention is drawn to the following places, which may be of interest for search:

For lanterns	F21L 19/006