F17C

VESSELS FOR CONTAINING OR STORING COMPRESSED, LIQUEFIED OR SOLIDIFIED GASES; FIXED-CAPACITY GAS-HOLDERS; FILLING VESSELS WITH, OR DISCHARGING FROM VESSELS, COMPRESSED, LIQUEFIED, OR SOLIDIFIED GASES (storing fluids in natural or artificial cavities or chambers in the earth B65G 5/00; construction or assembling of bulk storage containers employing civil-engineering techniques E04H 7/00; variable-capacity gas-holders F17B; liquefaction or refrigeration machines, plants, or systems F25)

Definition statement

This place covers:

- Gas vessels for the storage of compressed, liquefied or solidified gas. The complete pressure range is covered: sub-atmospheric, low pressure like vapour pressure of liquefied gas, up to very high pressure without upper restriction. Storage and transport of gas are the only purpose of pressure vessels of this subclass. Gases are stored in the pressure vessel in gaseous, liquefied or solidified state.
- Pressures vessels that are cooled and insulated to maintain a certain state of contents.
- The only processes that might take place inside pressure vessel of this subclass are sublimation and vaporisation, usually due to voluntary or accidental heat input into the vessel. Sublimation and vaporisation that takes place outside the pressure vessel is to be classified too, as long as it happens in the context of voluntary regasification of liquefied gas to deliver the fluid in gaseous form to a user or accidental heat input.

Groups in the 2000-range:

The groups F17C 2201/00 - F17C 2209/00 cover features of the pressure vessel itself:

- the pressure vessel's form and size
- the pressure vessel's wall structure and the material the wall is made of
- Arrangements for mounting or grouping pressure vessels
- Components in connection with the pressure vessel.
- the pressure vessel's manufacturing methods

The groups F17C 2221/00 - F17C 2227/00 consider the fluid contained in the pressure vessel and its charging and discharging into and from the pressure vessel.

- the fluid's composition and state before and after the transfer.
- the methods of filling and emptying the pressure vessel and ways to transfer the fluid into and out of the pressure vessel
- Group F17C 2250/00 for dealing with the controlling, indicating, monitoring or regulating of various parameters in relation with the vessel or the fluid, like pressure or temperature
- Group F17C 2260/00 for purposes or effects achieved by the gas storage and its handling
- Group F17C 2270/00 for applications or the locations where pressure vessels are used

Layout of definition statements:

“Positive” examples have been chosen among patents to illustrate the definition statement and what is to be classified in the groups of the 2000 range. The qualifying features are marked in green in these drawings.

To illustrate the boundaries of the definition statement, “negative” examples have been chosen among patents to illustrate what would not lead to or even disqualify from a classification in a group. The corresponding features are marked in red in these drawings.

Relationships with other classification places

The fluid contained in the vessel according to F17C should be a gas. It is stored in a gaseous, mostly compressed, or in a liquefied or solidified state of matter in the pressure vessel.

Vessels that contain other substances than gases are classified in B65D.

Gas that is stored in solved or adsorbed form are classified in F17C 11/00.

Liquefaction, solidification or separation of gases or gaseous mixtures by pressure and cold treatment are classified in F25J.

Vessels in which processes take place, like chemical reactions, nuclear reactions, gas mixing or liquefaction, are classified in corresponding subclasses, like B01F 3/00 for mixing, e.g. dispersing, emulsifying, according to the phases to be mixed.

Processes involving gas, but for which the focus is on the process external to the pressure vessel and not on the pressure vessel itself, should be classified in subclasses relevant to the process.

Pressure vessel containing additionally to the gas another product or apparatus for which the gas serves as a carrier or a means for achieving another effect than storage, are to be classified in subclasses relevant to the application.

References

Limiting references

This place does not cover:

- Pressure vessels in which processes, besides sublimation or vaporisation, take place
- Pressure vessels for chemical or nuclear reactions
- Pressure vessels in which gas flows are mixed
- Pressure vessels in which the gas serves purposes other than being stored, like being a vector for another substance
- Pressure vessel containing another product or apparatus for which the gas serves as containment

Storing fluids in natural or artificial cavities or chambers in the earth	B65G 5/00
Variable-capacity gas holders	F17B

Informative references

Attention is drawn to the following places, which may be of interest for search:

Autoclaves	B01J 3/04
Construction or assembling of bulk storage containers employing civil engineering techniques	E04H 7/00
Accumulators for supplying fluid under pressure	F15B 1/04
Methods or means for influencing the flow of gases or liquids	F15D
Methods or apparatus for combustion using only solid fuel	F23B
Stoves for gaseous fuels	F24C 3/00
Domestic or central heating systems	F24D
Fluid heaters	F24H
Liquefaction or refrigeration machines, plants or systems	F25

Special rules of classification

Documents classified in F17C should also get classifications in the 2000 series of this subclass. Classification in those Indexing Codes is mandatory.

Each technical feature in line with a definition should get this classification. There is theoretically no limitation to the quantity of symbols that can be attributed to one single document.

A document contains a technical feature when either this feature is explicitly mentioned in the text or undoubtedly visible in the drawings (e.g.: a weld seam symbol in a drawing has to be classified). Features that are implicit but not mentioned should generally not be considered. Exceptionally, when a feature is not explicitly mentioned but there is no doubt that this particular feature is meant, it may be classified too.

All embodiments have to be considered individually and their features separately identified and classified.

In the exceptional case that one feature reasonably fits into more than one definition, it can be classified in all of them.

Documents should, be classified within this 2000 series completely or not at all, to identify easily if complete classification of all features have been given. Simply attributing e.g. a single classification in that range to a document and not classifying all the other technical features should be avoided.

If the text contains a term which is very specific in the art of "pressure vessels for gas storage and transport" (e.g. "liner" or "LNG"), but its definition or use in the document seems to be in contradiction with the definition herein or the general knowledge of person skilled in the art, the term should in any case be considered and a classification code related to the term should be attributed.

When prior art (e.g. in form of patent numbers, summaries or drawings about prior art) is specifically mentioned in the document, its technical features are NOT considered for classification.

Warning about reorganisation!

Only a part of the documents classified in main groups F17C 1/00 - F17C 9/00 and F17C 13/00 have been coded completely in the 2000 series.

Consequently, in future all documents of subclass F17C should be classified in the 2000 series of F17C. No documents from subclass F17B have been classified so far in this scheme.

Glossary of terms

In this place, the following terms or expressions are used with the meaning indicated:

Gas	substance that is in gaseous state of matter at normal conditions (atmospheric pressure and normal ambient temperature. Substances that are in a gaseous state of matter but would not be gaseous at normal conditions are not considered in this subclass. Gas can be put in liquid (liquefied gas), or solidified state of matter, for transport and storage
Pressure vessel	container containing gas for storage and/or transport
Fluid or handled fluid	fluid contained in, charged into or discharged out of the pressure vessel

Synonyms and Keywords

In patent documents, the following words/expressions are often used as synonyms:

- "reservoirs", "bottles", "cartridges" and "containers"

F17C 1/00

Pressure vessels, e.g. gas cylinder, gas tank, replaceable cartridge (pressurised apparatus for purposes other than storage, see the relevant subclasses such as A62C, B05B; associated with vehicles, see the appropriate subclass of classes B60 - B64; pressure vessels in general F16J 12/00; {autoclaves B01J 3/04; tank vehicles B60P 3/22; railway tank wagons for carrying fluent materials B61D 5/00; accumulators for supplying fluid under pressure F15B 1/04; liquified gas stoves F24C 3/00})

Definition statement

This place covers:

Constructional aspects of vessel for containing gas under high pressure.

References

Limiting references

This place does not cover:

Autoclaves	B01J 3/04

Informative references

Attention is drawn to the following places, which may be of interest for search:

Pressurised apparatus for purposes other than storage	A62C, B05B
Pressurised apparatus for purposes other than storage associated with vehicles	B60 - B64
Tank vehicles	B60P 3/22
Railway tank wagons for carrying fluent materials	B61D 5/00
Accumulators for supplying fluid under pressure	F15B 1/04
Pressure vessels in general	F16J 12/00
Liquefied gas stoves	F24C 3/00

F17C 3/00

Vessels not under pressure

Definition statement

This place covers:

Constructional aspects of vessel for containing liquefied gas or cryogenic fluid which is not under high pressure such as details about the insulation or about the suspension of an inner vessel within an outer vessel.

F17C 5/00

Methods or apparatus for filling containers with liquefied, solidified, or compressed gases under pressures (adding propellants to aerosol containers B65B 31/00)

Definition statement

This place covers:

The filling of a receiver vessel with a gas at a high pressure.

References

Limiting references

This place does not cover:

Methods or apparatus for adding propellants to aerosol containers	B65B 31/00

F17C 6/00

Methods and apparatus for filling vessels not under pressure with liquefied or solidified gases

Definition statement

This place covers:

The filling a vessel with a low pressure as for liquefied gas or cryogenic fluid.

F17C 7/00

Methods or apparatus for discharging liquefied, solidified, or compressed gases from pressure vessels, not covered by another subclass

Definition statement

This place covers:

The discharging of a vessel comprising a gas stored with a high pressure therein.

F17C 9/00

Methods or apparatus for discharging liquefied or solidified gases from vessels not under pressure

Definition statement

This place covers:

The discharging of a vessel comprising a gas stored with a low pressure therein as for liquefied gas or cryogenic fluid.

F17C 11/00

Use of gas-solvents or gas-sorbents in vessels {(absorbing compositions for acetylene C10L 3/04; absorbing compositions for hydrogen C01B 3/0005)}

References

Limiting references

This place does not cover:

Absorbing compositions for hydrogen	C01B 3/0005
Absorbing compositions for acetylene	C10L 3/04

F17C 13/00

Details of vessels or of the filling or discharging of vessels

Definition statement

This place covers:

Means for coding or identifying vessels or their content, special adaptations of indicating, measuring, monitoring and regulating, mounting arrangements of vessels, it means their integration in their area of use, arrangement or mounting devices for preventing or minimising the effect of explosion, arrangement of valves, and closures.

F17C 2201/00

Vessel construction, in particular geometry, arrangement or size

Definition statement

This place covers:

Pressure vessels for which either the shape or axis orientation can be determined or the size either determined or estimated.

F17C 2201/01

Shape

Definition statement

This place covers:

Pressure vessels the shape of which can be identified. For grouped vessel, the shape of the single vessel has to be considered individually, not the shape of the group per se.

In this positive example from GB818073: the shape of the vessel is the shape of the inner vessel.

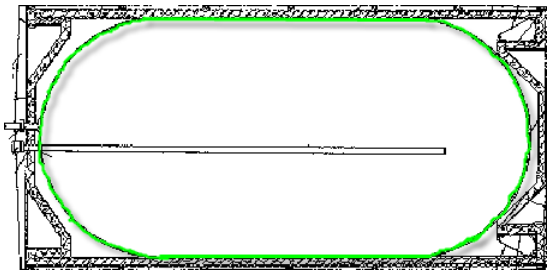

In this negative example from GB818073, the outer jacket shape is NOT to be considered, as the definition of "shape" excludes the contour of external frames, covers, boxes etc...

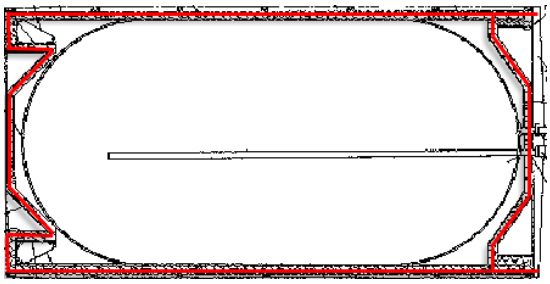

In this negative example from US20080178611, the shape is not classified, as in this purely functional drawings, the vessels is represented symbolically. Symbolic information is generally not considered sufficient to determine a shape, unless the drawing is explicit and realistic, which is not the case here.

Special rules of classification

In most cases, the exterior shape of a vessel is identical to the interior shape of the vessel. It may though happen that a pressure vessel discloses a visible exterior shape that is different from the interior contour. In these exceptional cases, the classification codes of both shapes have to be allocated.

Glossary of terms

In this place, the following terms or expressions are used with the meaning indicated:

Shape	the shape of a pressure vessel is the visible external form of the pressure vessel when reduced to its core. The core comprises only the layers that contribute to the structural integrity of the vessel and enable it to withstand the pressure of the contained fluid.

F17C 2201/0104

cylindrical

Definition statement

This place covers:

Pressure vessels with an axis and a cylindrical form with circular sections

Glossary of terms

In this place, the following terms or expressions are used with the meaning indicated:

End-piece	end parts of a cylindrical pressure vessel, complementary to the middle part. End-pieces and middle part form the whole vessel.
Middle part	part of a cylindrical pressure vessel between the end-pieces. End-pieces and middle part form the whole vessel.

F17C 2201/0109

with exteriorly curved end-piece

Definition statement

This place covers:

Cylindrical pressure vessels with at least one exteriorly curved end-piece. The form of the end-piece is convex when considered from the outside and this convex form has to be dominant.

In this positive example from DE8619754U, the shape is a half-globe.

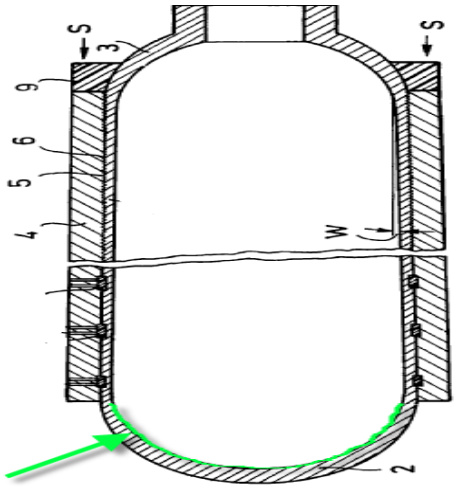

In this positive example from WO2053966, the shape has a flat bottom, but is dominantly exteriorly curved.

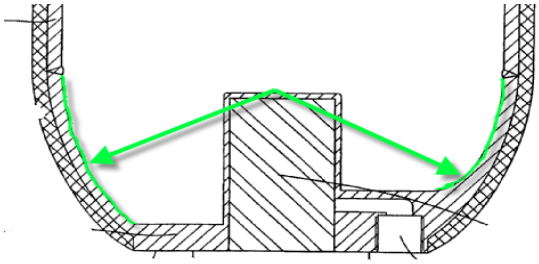

In this negative example from DE19952611, the round corners seem related to the manufacturing of the vessel. The flat bottom is dominant: the vessel is classified as having flat end-pieces.

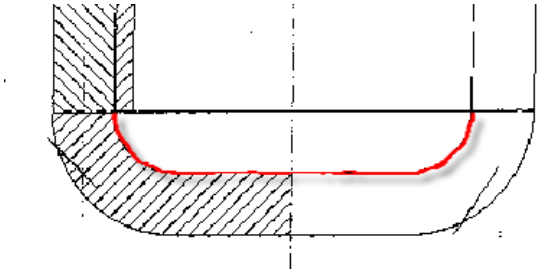

F17C 2201/0114

with interiorly curved end-piece

Definition statement

This place covers:

Cylindrical pressure vessels with at least one interiorly curved end-piece. The form of the end-piece is concave when considered from the outside and this concave form has to be dominant.

In this positive example from DE877461, the shape of the vessel is interiorly curved.

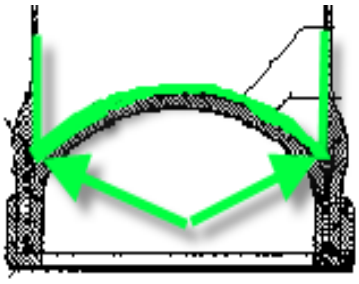

F17C 2201/0119

with flat end-piece

Definition statement

This place covers:

Cylindrical pressure vessels with at least one flat end-piece. The flat form has to be dominant.

In this positive example from CH1480971, the shape of the vessel is flat.

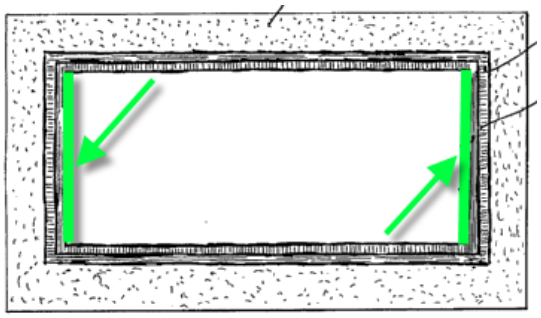

In this negative example from DE490791, the curved portion is dominant upon the flat one: the vessel is classified as having exteriorly curved end-pieces.

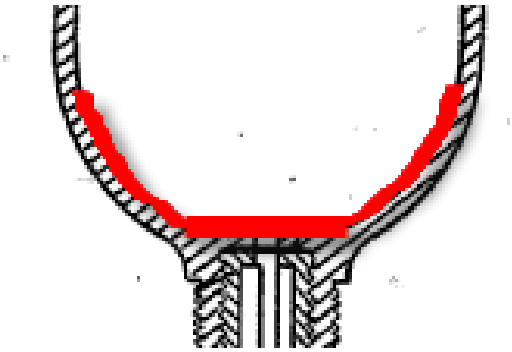

F17C 2201/0123

with variable thickness or diameter

Definition statement

This place covers:

Cylindrical pressure vessels for which in the middle part, the cross section has not a constant surface along the axis.

Cylindrical pressure vessels for which the wall thickness in the middle part is not constant along the axis.

The variations in thickness or diameter can be the result of a variable wall thickness along the axis, but also the result of e.g. rings added externally on the middle part.

In this positive example from US2280501, the thickness of the wall is not constant.

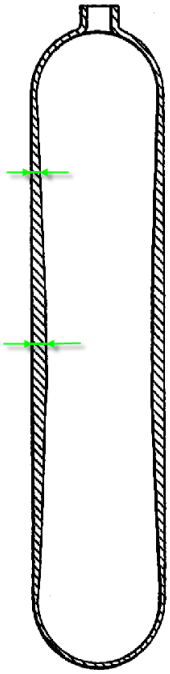

In this positive example from BE405843, the thickness of the wall is constant, but not the surface of the section.

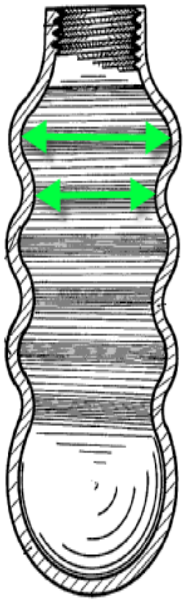

In this negative example from DE10325598, the wall of the end piece, but not of the middle part, has a variable thickness.

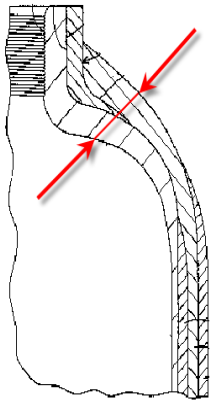

F17C 2201/0128

spherical or elliptical

Definition statement

This place covers:

Pressure vessels with a spherical or elliptical shape.

In this positive example from DE3131040, the shape is elliptical .

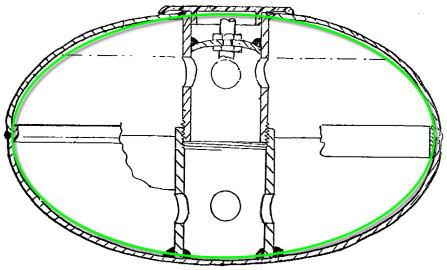

In this positive example from WO9612914, the shape is spherical.

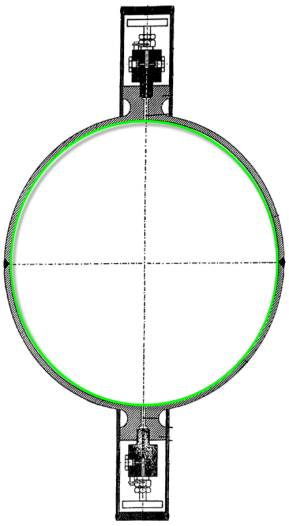

In this negative example from DE800230, the shape seems elliptical but from the text indicated that the vessel is cylindrical (cross sections may be misleading).

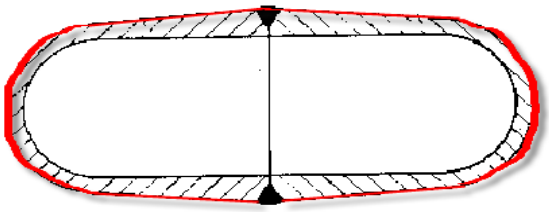

F17C 2201/0133

toroidal

Definition statement

This place covers:

Pressure vessels with toroidal form, like a hoop or a tire, that actually often replace spare tires in cars.

In this positive example from DE3316539, the shape is a tore.

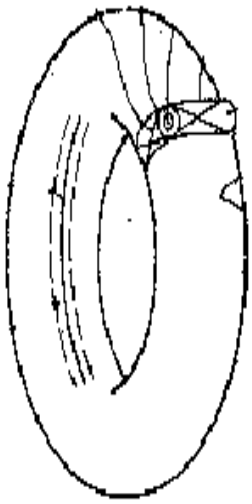

Synonyms and Keywords

In patent documents, the following words/expressions are often used as synonyms:

- "tore and "donut"

F17C 2201/0138

tubular

Definition statement

This place covers:

Pressure vessels in form of a tube or a hose. The diameter of the tube is small in comparison with the extended length of the tube.

In this positive example from DE2305840 , the shape is tubular, even if the entire construction may look like a cylinder.

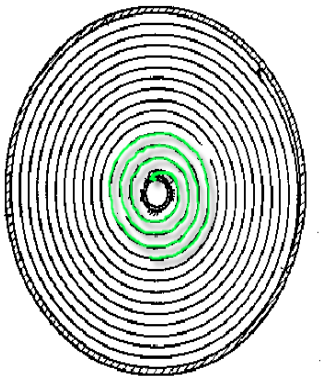

In this positive example from DE19547752, the shape is tubular.

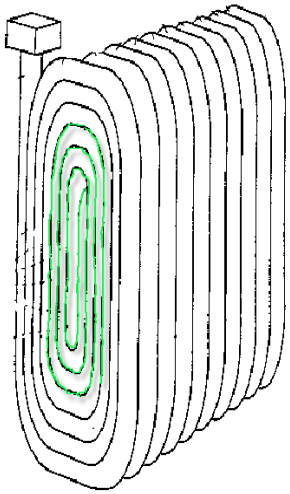

In this negative example from US2008256960, the middle part is tubular, but the vessel is actually cylindrical.

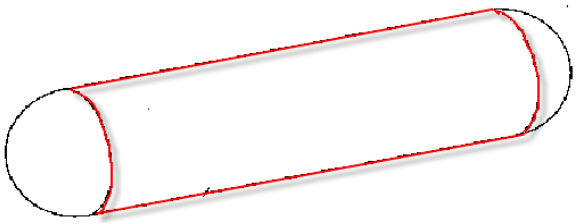

F17C 2201/0142

conical

Definition statement

This place covers:

Pressure vessels in a general conical form, i.e. cylindrical with an increasing and/or decreasing cross section.

In this positive example from WO2004005790, the shape is conical.

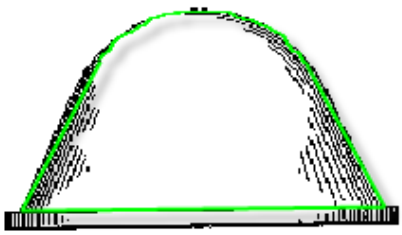

In this positive example from DE19747907 the shape is conical.

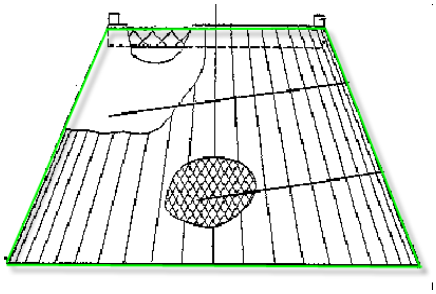

In this negative example from GB521979, the vessel is cylindrical, with an intermediate conical connection to the end-piece.

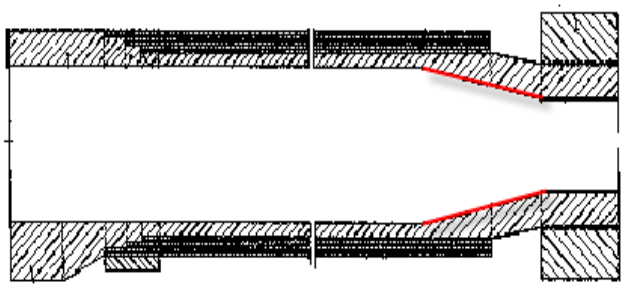

F17C 2201/0147

complex

Definition statement

This place covers:

Pressure vessels the shape of which is not covered by the groups above, i.e. not cylindrical, spherical, elliptical, tubular or conical.

Pressure vessels the shape of which is not an association of fluidly connected shapes covered by the groups above, not cylindrical, spherical, elliptical, tubular or conical.

In this positive example from DE2931947, the shape is simple, but compliant with the definition of complex.

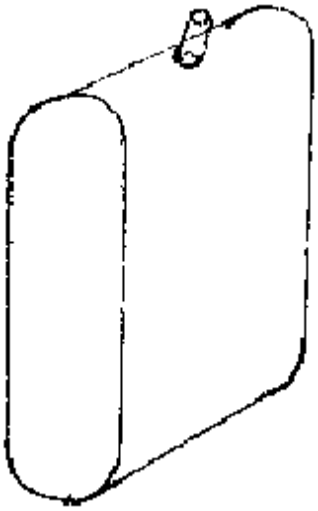

In this negative example from WO0049330, two cylindrical pressure vessel are bundled. This vessel "cylindrical with exteriorly curved end pieces" (F17C 2201/0109) and the bundle is considered as "two or more vessels " (F17C 2205/013).

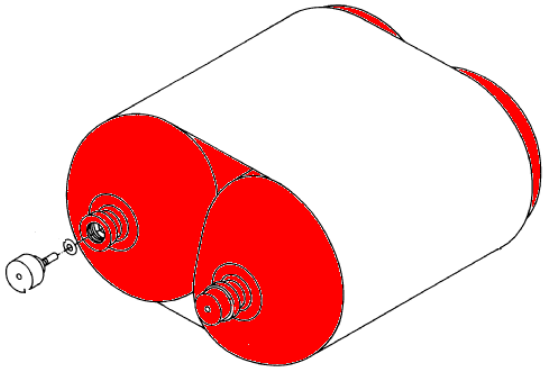

F17C 2201/0152

Lobes

Definition statement

This place covers:

Pressure vessels with the shape of connected curved wall segments.

In this positive example from DE1944315, the external shape consists of lobes, with an single internal volume.

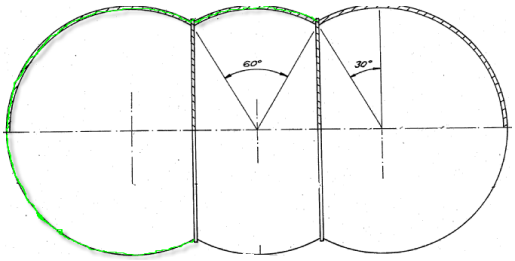

In this positive example from EP1355105, the external shape consists of lobes, with several distinct internal volumes.

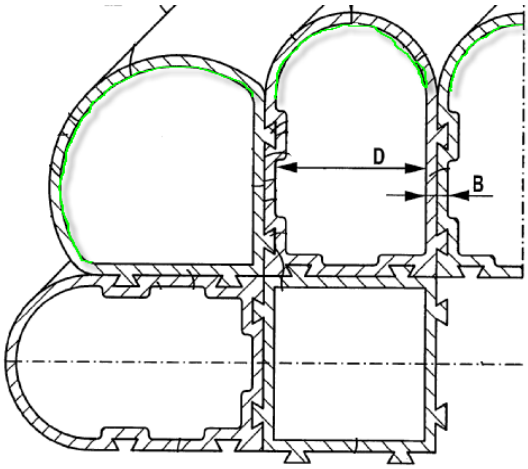

F17C 2201/0157

Polygonal

Definition statement

This place covers:

Pressure vessels with the shape of connected flat wall segments with generally sharp edges.

In this positive example from FR2781555, the external shape is polygonal, with several distinct internal volumes.

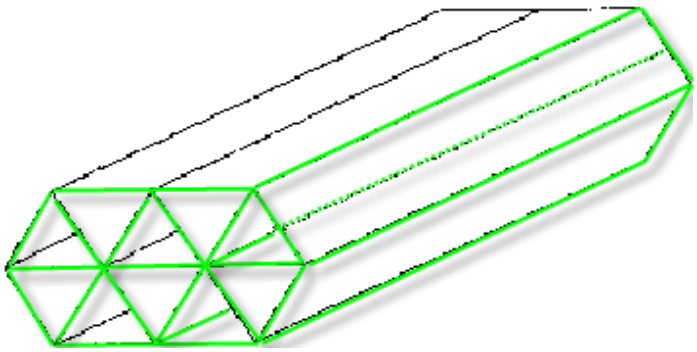

In this negative example from CH148097, the shape seems polygonal, but the pressure vessel is actually cylindrical (cross sections may be misleading).

F17C 2201/0161

Honeycomb

Definition statement

This place covers:

Pressure vessels with a honeycomb structure (6 edges) inside the vessel, in contact with the stored fluid.

In this positive example from FR1268538, the honeycomb structure is in contact with the fluid.

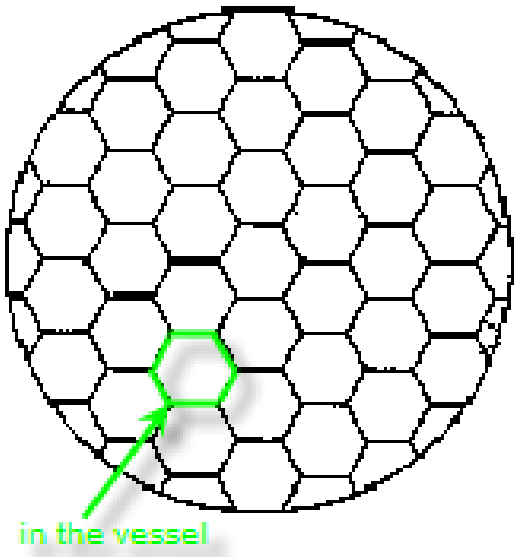

In this negative example from NL7414082, the honeycomb structure is located in the insulation layer and is thus not in contact with the stored fluid.

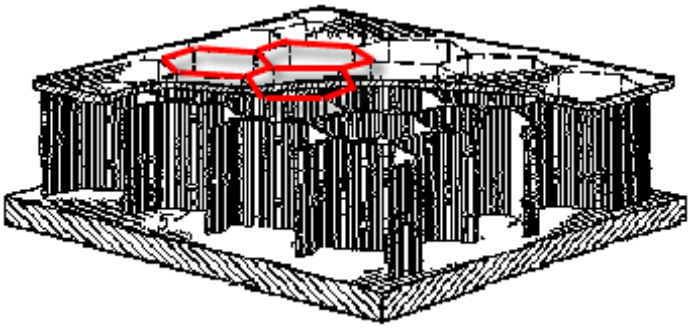

F17C 2201/0166

divided in several chambers

Definition statement

This place covers:

Pressure vessels with the inner storage volume subdivided in individual volumes. These volumes are separated by common walls.

In this positive example from FR2781555 , 10 chambers are visible.

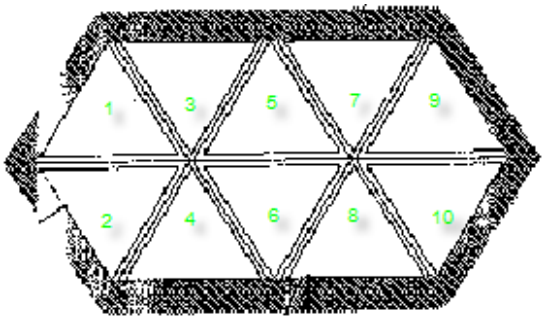

In this positive example from GB412814, 2 chambers are visible.

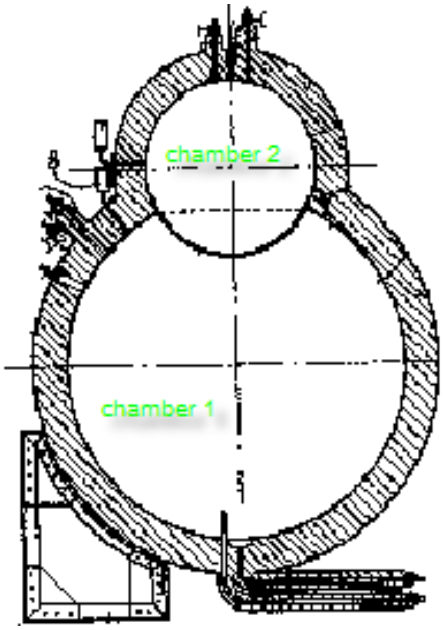

In this negative example from DE1946465, several distinct cylindrical vessels are fluidly connected and arranged in a bundle (F17C 2205/0134).

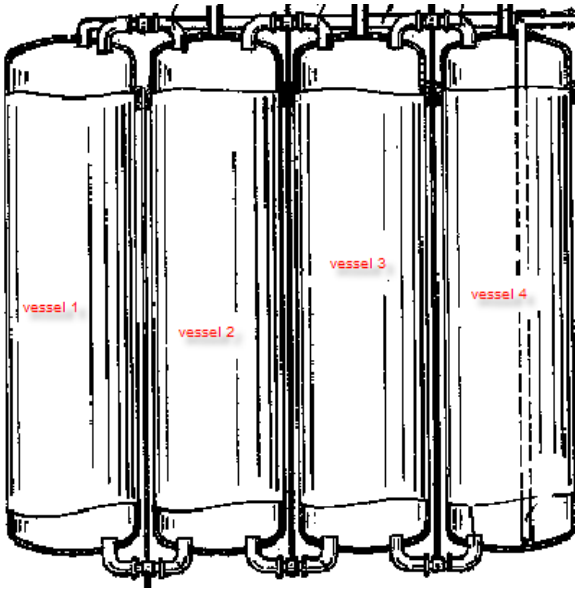

In this negative example from US1692670, two clearly distinguishable cylindrical vessels are mounted one inside the other (F17C 2205/0149).

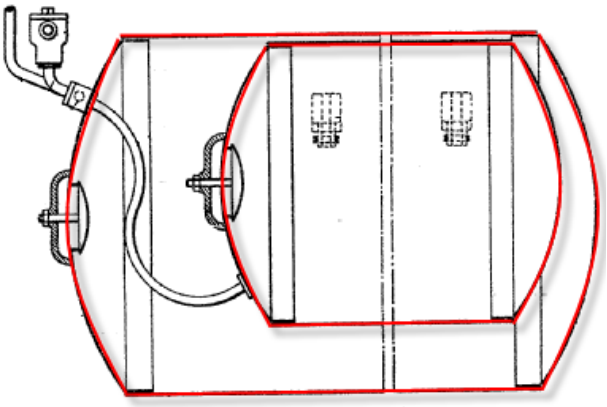

F17C 2201/0171

comprising a communication hole between chambers

Definition statement

This place covers:

Pressure vessel forming a single vessel wherein pressure balance between several distinct chambers is obtained via a permanent open hole between these chambers. For "pressure vessels divided in several chambers", the permanent open hole is situated in the common wall.

In this positive example from DE63206430, the 3 chambers of the " pressure vessel divided in several chambers" are connected by two permanent holes.

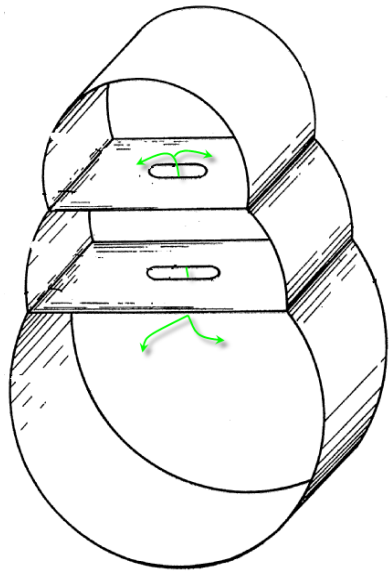

In this positive example from FR783241, a single vessel, materialized by its common external hull and its common fittings, is created by connecting cylindrical chambers via a permanent connection. This connection can be assimilated to holes as the cylindrical chambers are close to each other.

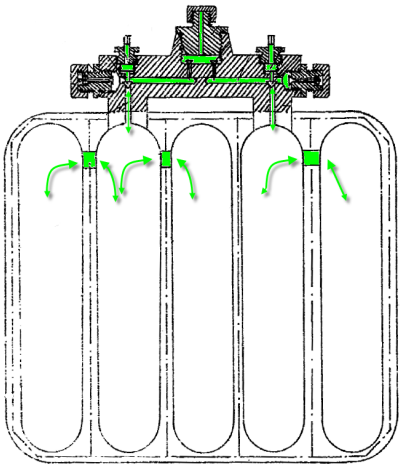

In this negative example from GB693156, two strictly separated vessels are simply connected by a pipe. No common vessel is created and the pipe is too long to be considered a hole.

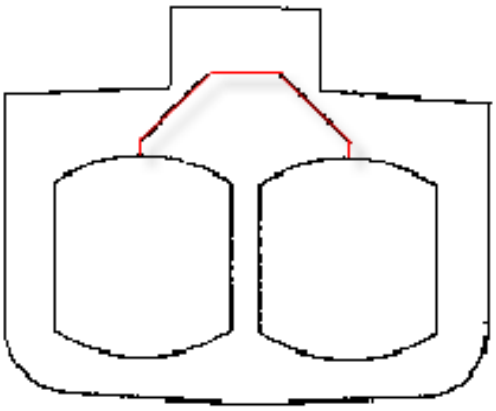

In this negative example from DE531720, a hole connects two chambers of the vessel, but an inserted valve allows no pressure balance.

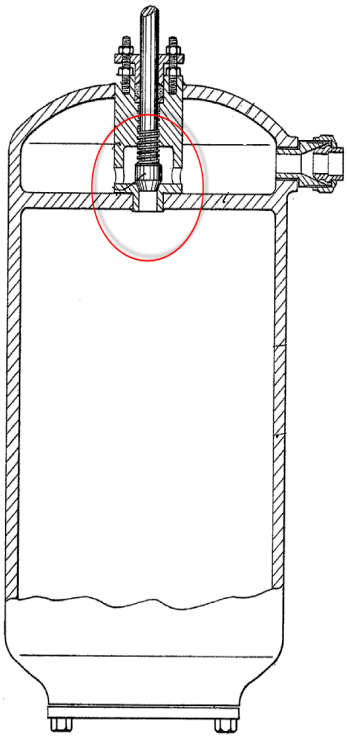

F17C 2201/0176

variable

Definition statement

This place covers:

Pressure vessel with a non-constant or variable shape or with a non-constant or variable inner or outer volume.

In this positive example from DE102009017650, the shape is constant, but the volume changes.

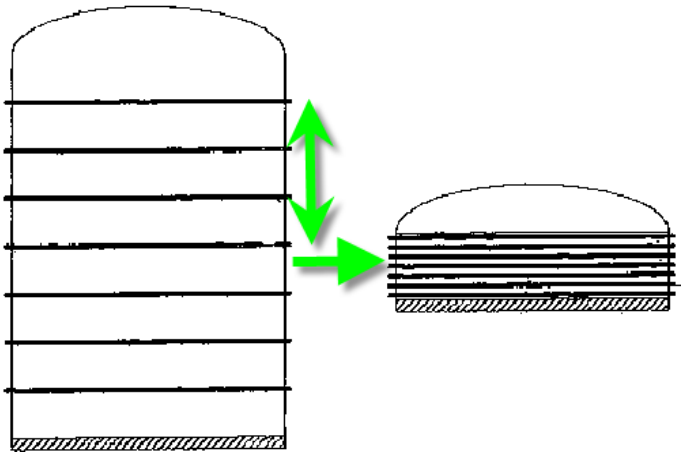

References

Informative references

Attention is drawn to the following places, which may be of interest for search:

Large flexible containers	B65D 88/16
Gas holders with variable capacity, with flexible walls	F17B 1/26

Special rules of classification

Warning about pending reorganisation: Documents from F17B that will be deep-indexed with be classified herein.

F17C 2201/018

with bladders

Definition statement

This place covers:

Pressure vessel with an inflatable bag located in the vessel to retain the fluid.

In this positive example from US6234352, the bladder is attached on top.

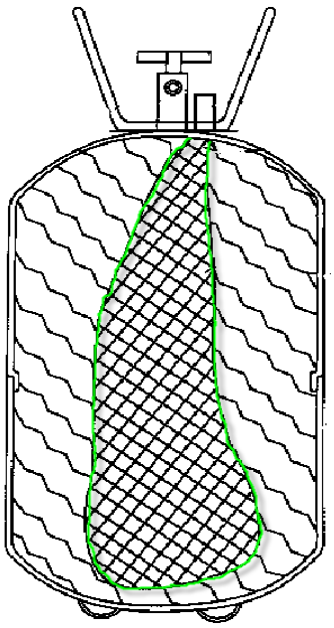

Special rules of classification

When counting the number of layers in the group F17C 2203/0612, a bladder is not counted.

Synonyms and Keywords

In patent documents, the following words/expressions are often used as synonyms:

- "bag (English)bladder" and "bag"

F17C 2201/0185

with separating membrane

Definition statement

This place covers:

Pressure vessel with volume separating membrane attached to the inner wall of the vessel along a line.

In this positive example from GB80450, a membrane separates the vessel in two.

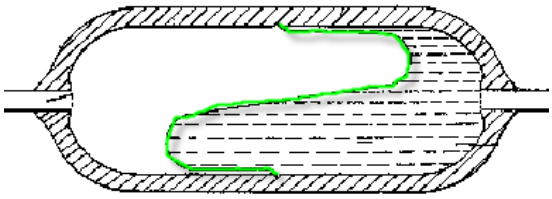

In this negative example from DE29816811U, a bladder separates the vessel in two.

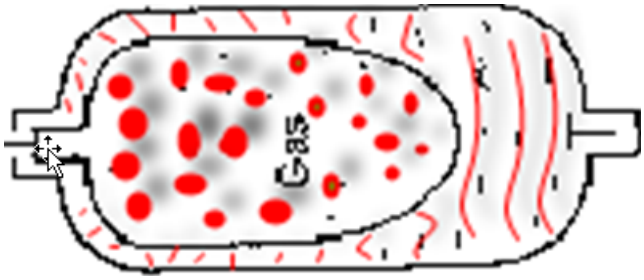

References

Informative references

Attention is drawn to the following places, which may be of interest for search:

Shape flexible with bladders	F17C 2201/018

Special rules of classification

Bladders have the function of a separating membrane, but are only classified in F17C 2201/018.

F17C 2201/019

with pistons

Definition statement

This place covers:

Pressure vessel with a volume separating piston.

In this positive example from US5253682, a free piston in the vessel helps discharging.

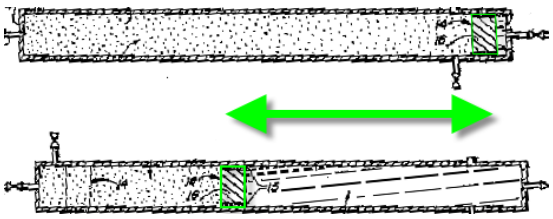

In this negative example from US3426545, the piston is part of a pump.

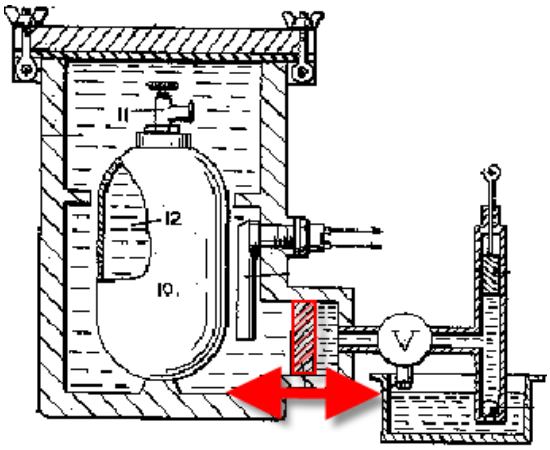

References

Informative references

Attention is drawn to the following places, which may be of interest for search:

Positive displacement machines for liquids; pumps:	F04B

F17C 2201/0195

with bellows

Definition statement

This place covers:

Pressure vessel in form of a bellows.

In this positive example from US3270905, the whole pressure vessel is a bellows.

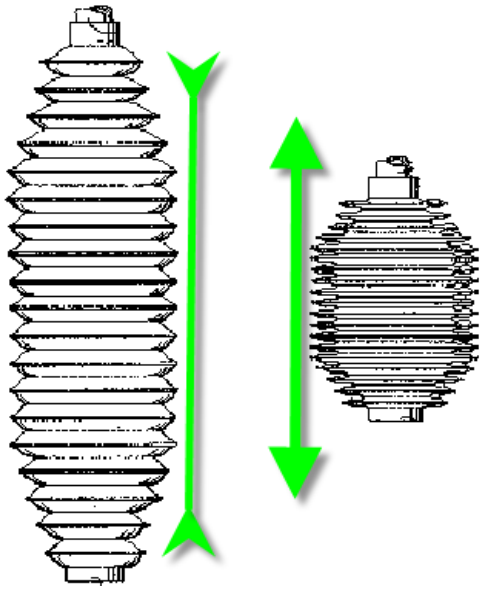

F17C 2201/03

Orientation

Definition statement

This place covers:

Pressure vessels for which an axis can be defined and for which this axis has a defined orientation when mounted or in use. The orientation is mostly suggested by a device that allows or constrains the pressure vessel to be oriented a certain way. Such devices can be supporting feet, hanging up devices, frames etc.

In this positive example from GB494426, the pressure vessel has a vertical orientation due to its flat bottom acting as a mounting foot.

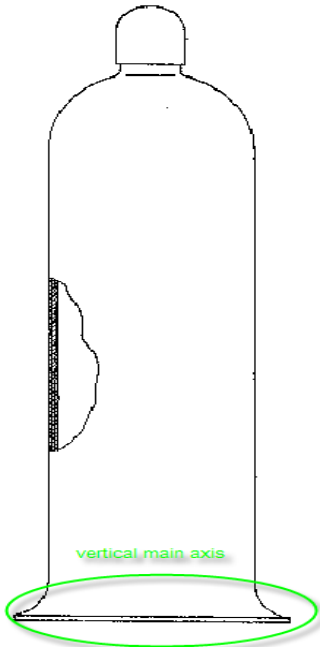

In this negative example from DE19934851, the vessel is a cylindrical bottle that can be turned upside down or oriented in any direction, without any preferred direction.

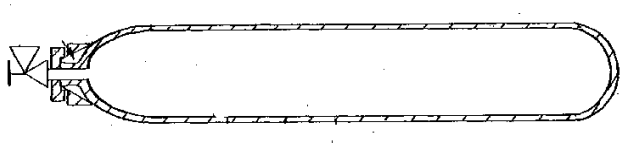

In this negative example from US3468264, no main axis of the vessel on the ship is identifiable.

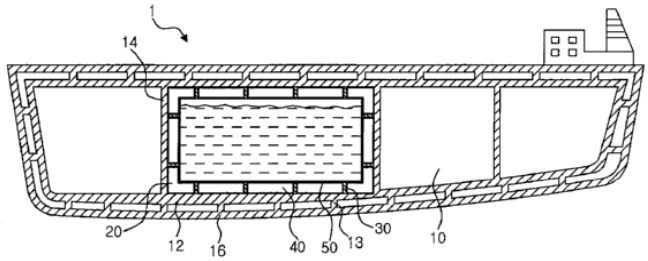

F17C 2201/032

with substantially vertical main axis

Definition statement

This place covers:

Pressure vessels for which the axis has a vertical orientation.

In this positive example from DE199106, the pressure vessel is cylindrical and has a flat bottom.

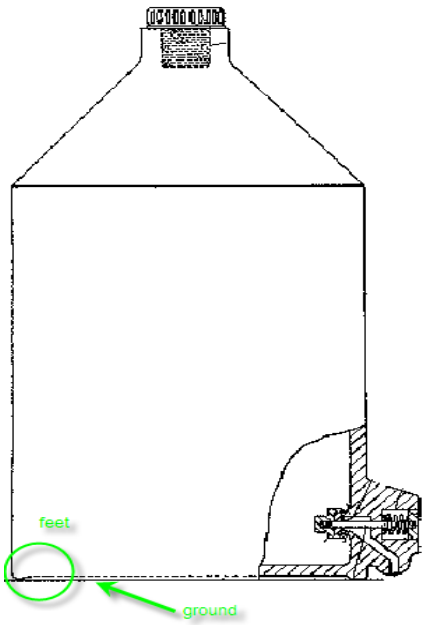

Special rules of classification

Pressure vessels with toroidal shape are classified herein, their axis passing through the middle of the hole.

F17C 2201/035

with substantially horizontal main axis

Definition statement

This place covers:

Pressure vessels for which the axis has a horizontal orientation

In this positive example from DE10022741, the cylindrical vessel rests on mounting feet.

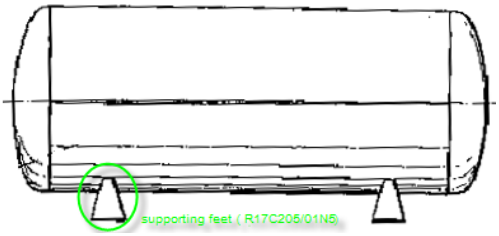

F17C 2201/037

with sloping main axis

Definition statement

This place covers:

Pressure vessels for which the axis is neither horizontal nor vertical.

In this positive example from EP2312196, the pressure vessel is mounted on an inclined frame.

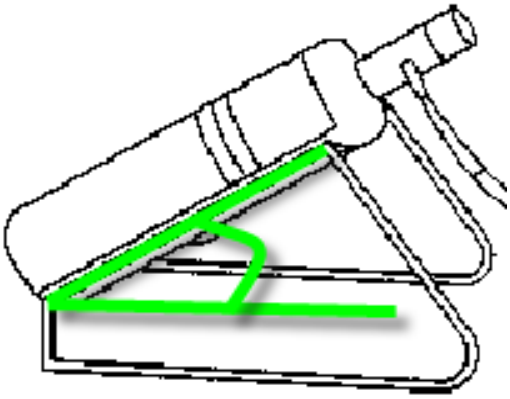

F17C 2201/05

Size

Definition statement

This place covers:

Pressure vessels for which the inner storage volume can be determined.

Pressure vessels for which the inner storage volume can be estimated. The volume can be suggested by any hint, like objects in the drawings or knowledge from the context the pressure vessel is used in.

In this positive example from US20040003743, the size of the human allows to estimate the size of the vessel.

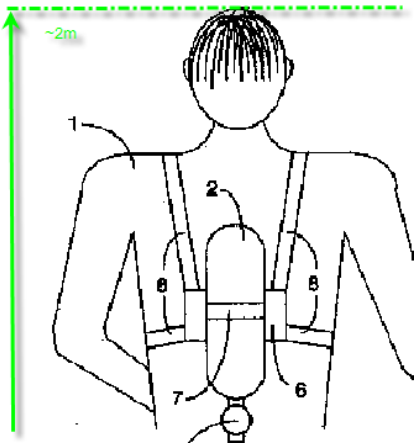

In this negative example from BE427219, the pressure vessel "looks" small, but there is no hint about the size.

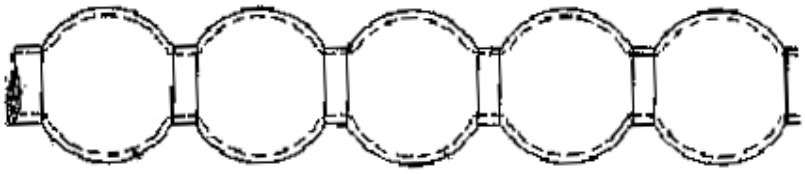

In this negative example from NL7314739, the storage capacity of the whole ship is certainly large, but not to be considered as the vessels are probably bundled, and the size of the individual vessel is difficult to estimate.

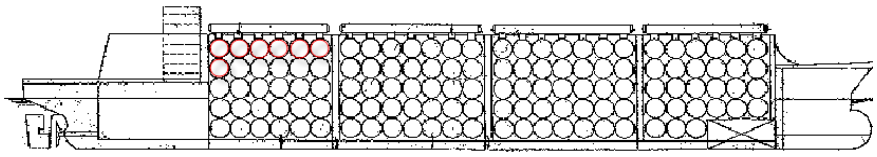

Special rules of classification

In case of bundled pressures vessels from F17C 2205/0134, the volume of the individual pressure vessel has to be classified, not the resulting overall volume.

The rule of classification, according to which a technical feature has to be explicitly mentioned, is not strictly applicable here: the size is a technical feature that can be estimated.

The boundaries indicated in the groups (30 liters, 1 m³, 1000 m³) are merely to be understood as an indication and an order of magnitude. They are not binding or strict.

In doubt, it is recommended to classify into two adjacent classes (portable and small, or small and medium, or medium and large) simultaneously.

F17C 2201/052

large (>1000 m3)

Definition statement

This place covers:

Pressure vessels of large size, an order of magnitude being 1000 m³. Such pressure vessels often appear in terminals, on subterranean caverns, on maritime gas carriers or sewage plants and hints that suggest a large size are often houses or ships.

In this positive example from WO9962794, the large size of the vessel is suggested by the building.

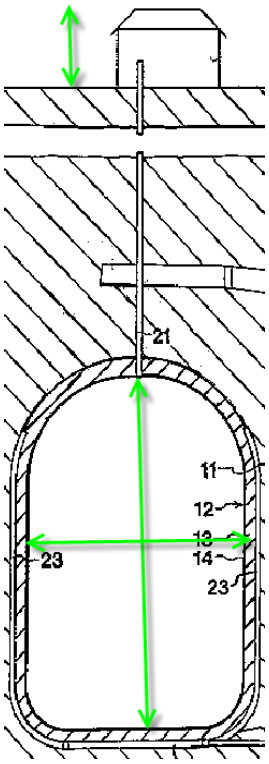

References

Informative references

Attention is drawn to the following places, which may be of interest for search:

Large containers	B65D 88/00
Component parts, details or accessories for large containers	B65D 90/00

F17C 2201/054

medium (>1 m3)

Definition statement

This place covers:

Pressure vessels of medium size (between 1 m³ and 1000 m³), often appearing e.g. on trailers supplying fuel stations, in installations for gas supply or in domestic use, e.g. buried LPG tanks.

In this positive example from DE10027619, the vessel is mounted on a trailer.

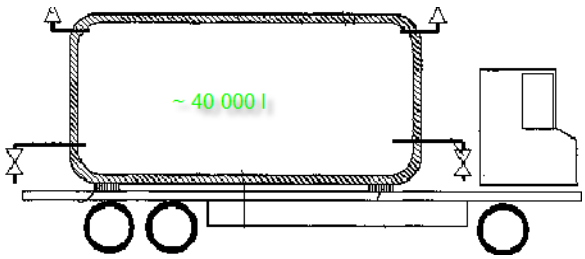

F17C 2201/056

Small (<1 m3)

Definition statement

This place covers:

Pressure vessels of small size (between 0,03 m³ and 1 m³), often appearing on cars, in domestic use or with transporting means on wheels.

In this positive example from US2005183425, the pressure vessel stores gas fuel in a car.

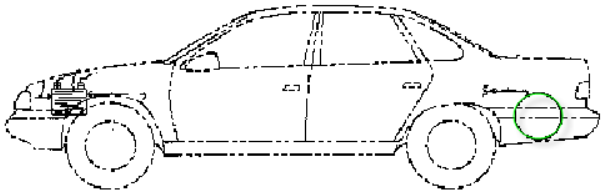

F17C 2201/058

portable (<30 l)

Definition statement

This place covers:

Pressure vessels of small size (up to 30 liters), like gas bottles or cartridges, which are typically portable or liftable by a single human by muscular force.

In this positive example from NL7708523, the pressure vessel is a gas cartridge.

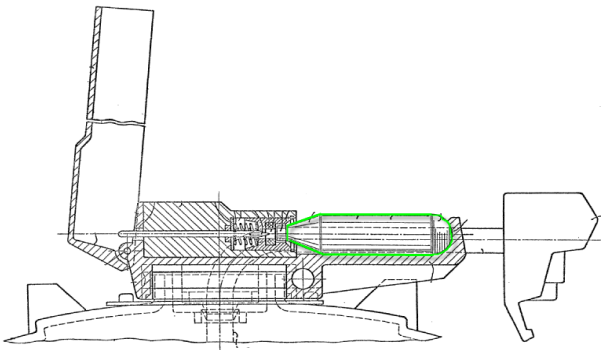

F17C 2201/06

Vessel construction using filling material in contact with the handled fluid

Definition statement

This place covers:

Pressure vessels containing floating elements in the liquid, which have only a physical and no chemical interaction with the fluid. Such elements are for instance micro-spheres or open spheres that prevent slosh.

In this positive example from US2008272130, spheres fill the whole container.

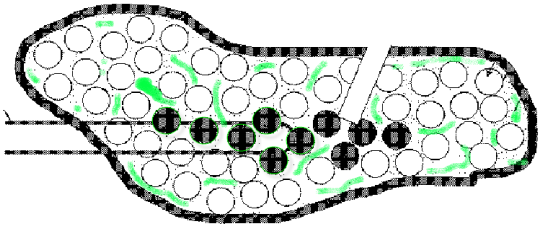

In this negative example from WO0211860, the pressure vessel is filled with an adsorbing medium, allowing adsorption and desorption of the fluid (F17C 11/00)

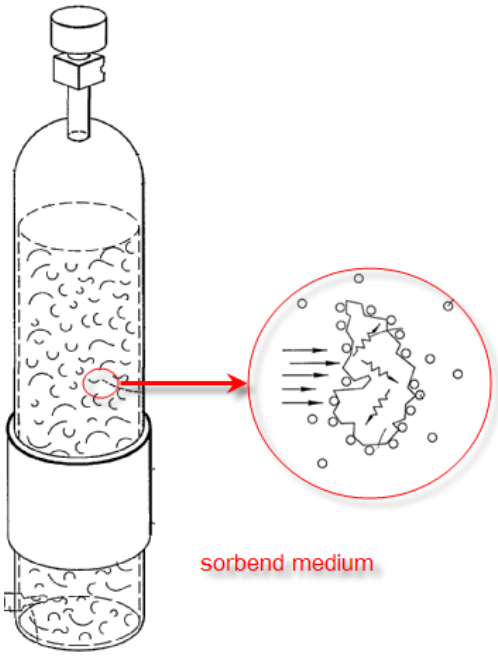

References

Informative references

Attention is drawn to the following places, which may be of interest for search:

Use of gas-solvents or gas-sorbents in vessels	F17C 11/00

F17C 2203/00

Vessel construction, in particular walls or details thereof

Definition statement

This place covers:

Pressure vessels for which technical features of the vessel wall and its structure can be determined.

Special rules of classification

Overlapping filament wraps are considered as one layer, as long as they form a functional envelope. They are often manufactured in one single process step.

The following items are not counted as wall or layer (convention for counting walls and layers): a thermal insulation envelope, a bladder, a coating.

Glossary of terms

In this place, the following terms or expressions are used with the meaning indicated:

Wall	Envelope that forms the vessel and creates a structure capable of withholding the inner fluid pressure. A wall can be discerned from other functional envelopes around the vessel by answering the question: would the structural integrity of the pressure vessel be threatened if this wall was absent?
Layer	Single functional sub-envelope, and must be clearly distinguishable from other layers, e.g. by its function or method of manufacturing.

F17C 2203/011

Reinforcing means

Definition statement

This place covers:

Pressure vessels for which means, additionally to the wall, are provided, to strengthen the wall.

F17C 2203/012

on or in the wall, e.g. ribs

Definition statement

This place covers:

Pressure vessels in which the means to strengthen the wall are integrated in the wall or placed on the wall, e.g. in form of ribs or bars.

In this positive example from GB476713, circumferential reinforcing rings are mounted on the middle part.

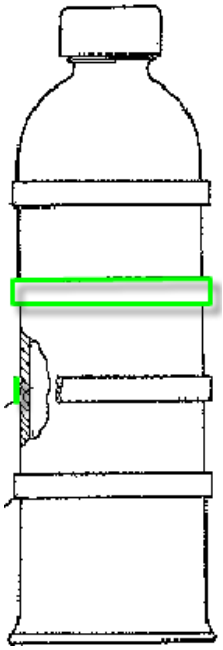

In this positive example from FR2799526, a reinforcing bar is mounted in the inner separation wall, in particular in a column inside the vessel.

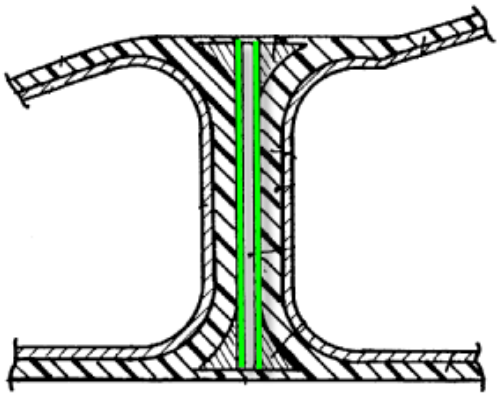

In this negative example from US5822838, the wall is made of wound filament. This filament is no additional means to reinforce the wall, but defines the wall itself.

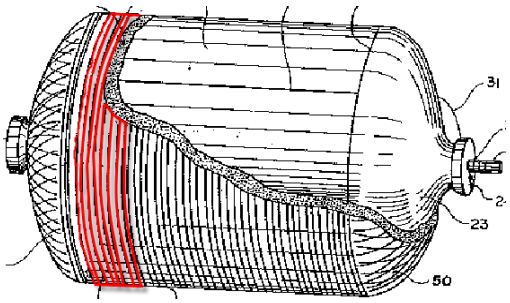

F17C 2203/013

in the vessel, e.g. columns

Definition statement

This place covers:

Pressure vessels in which the means to strengthen the wall are wall-to-wall bars, columns or rods in the interior of the pressure vessel.

In this positive example from EP0166492, wall-to-wall columns connect and support the two upper and lower flat walls.

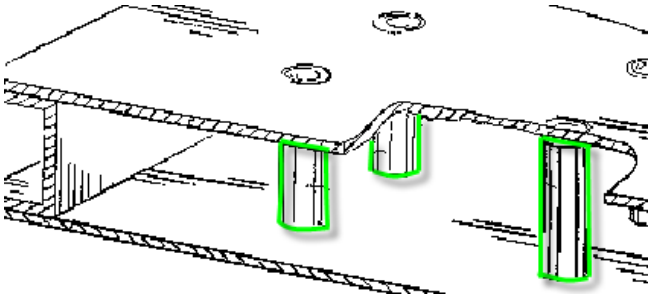

In this negative example from DE4300484, the reinforcing means on the inner wall do not have a wall-to-wall column structure.

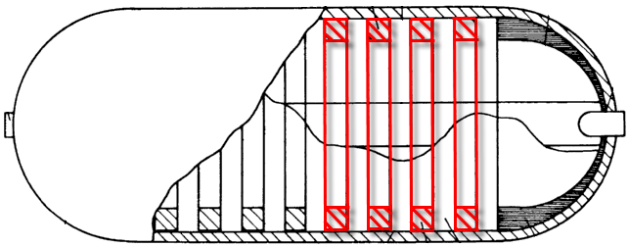

F17C 2203/014

Suspension means

Definition statement

This place covers:

Pressure vessels with an inner and a separate outer vessel wall, the inner vessel wall being held in the outer vessel wall by suspensions means, which are mostly designed to minimize thermal transfer.

In this negative example from DE101347733, the whole vessel is mounted in a frame.

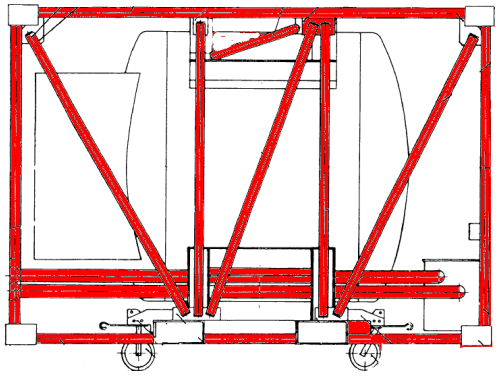

In this negative example from WO2010020431, circumferential bearing means (F17C 2205/0192) are no suspension means, as they hold the entire vessel upright from the outside.

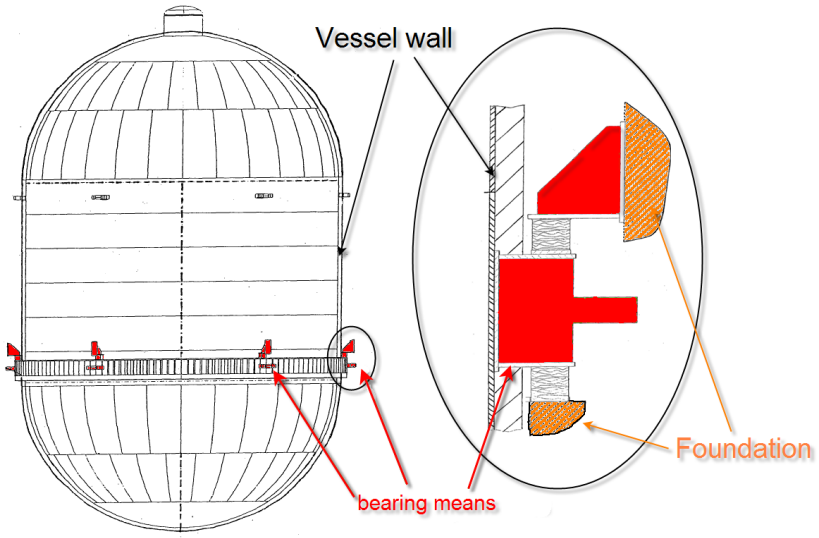

Special rules of classification

Bearing means for the vessel itself are classified in F17C 2205/0192.

F17C 2203/015

Bars

Definition statement

This place covers:

Pressure vessels in which the suspension means are in form of stiff bars, that can be submitted to traction or compression.

In this positive example from WO9859195, bars hold the inner tank.

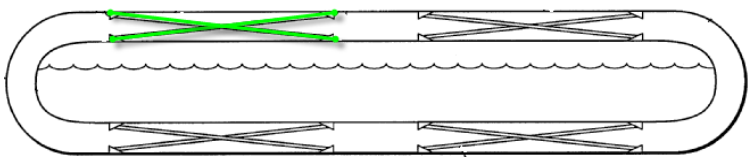

Synonyms and Keywords

In patent documents, the following words/expressions are often used as synonyms:

- "bar" and "rod"

F17C 2203/016

Cords

Definition statement

This place covers:

Pressure vessels in which the suspension means are in form of cords, submitted to traction only.

In this positive example from DE603062, the inner vessel is held by a cord.

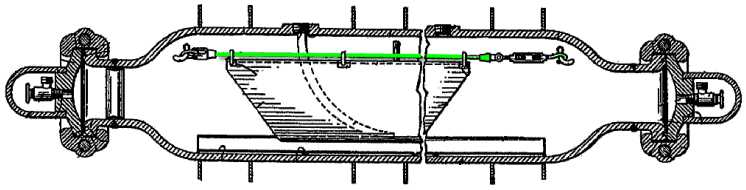

In this negative example from US6345933, cords attach the entire vessel to the ground (F17C 2205/0184).

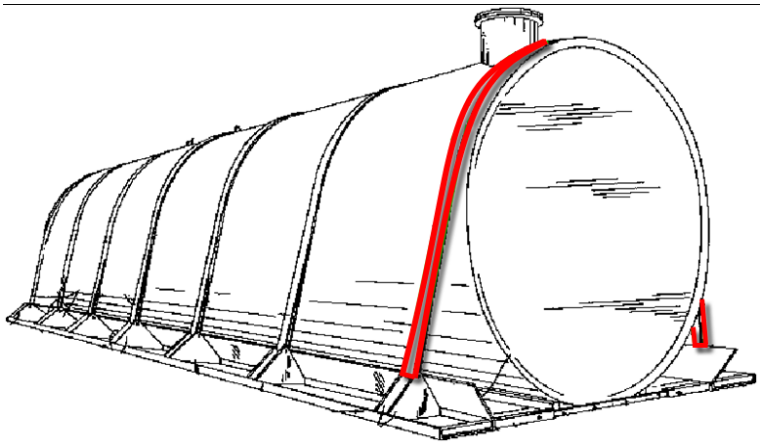

F17C 2203/017

Magnetic means

Definition statement

This place covers:

Pressure vessels in which the suspension means are in form of magnetic means, avoiding contact between the vessel walls.

In this positive example from WO2006034521, the inner vessel is held in place by magnets.

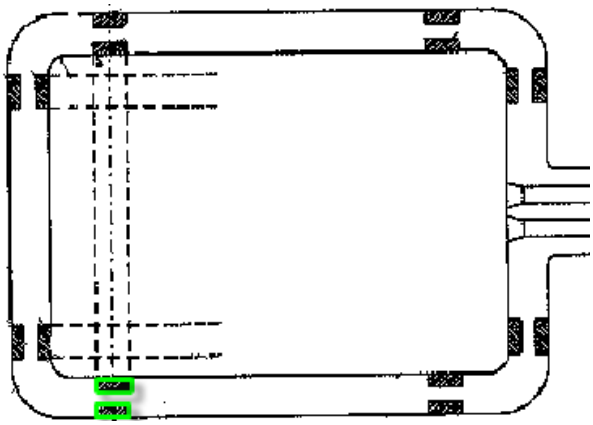

F17C 2203/018

by attachment at the neck

Definition statement

This place covers:

Pressure vessels in which the inner vessel is attached at its neck to the outer vessel.

In this positive example from US4218892, the inner vessel of the vertical pressure vessel is attached at the neck only.

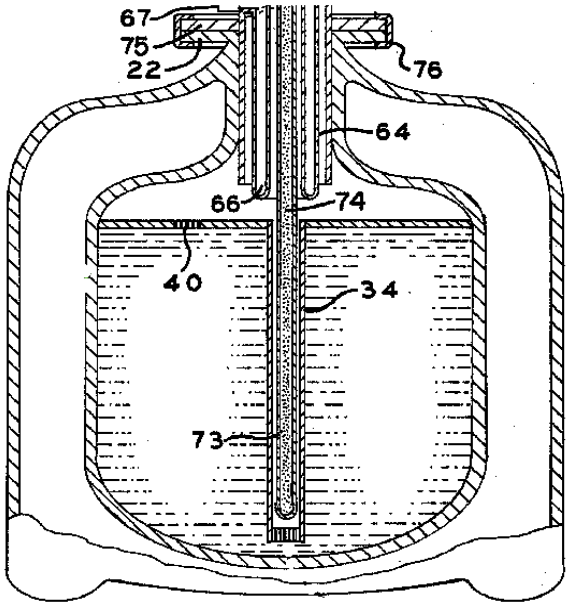

In this negative example from EP1041337, a bladder is attached at the neck.

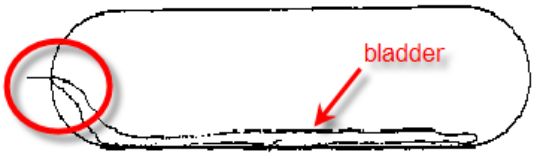

Special rules of classification

Bladders F17C 2201/018 are usually attached at the neck, but they are not to be classified here.

F17C 2203/03

Thermal insulations

Definition statement

This place covers:

Pressure vessels in which insulating means are provided to avoid or reduce thermal transfer between the fluid in the pressure vessel and the environment.

References

Informative references

Attention is drawn to the following places, which may be of interest for search:

Thermal insulation in general	F16L 59/00

Special rules of classification

When counting the number of layers in the group F17C 2203/0612, the thermal insulation layer is not counted.

Any material surrounding a pressure vessel has some thermal insulating effect, but only those documents should be considered having a thermal insulation in which the function of thermal insulation is explicitly mentioned.

F17C 2203/0304

by solid means

Definition statement

This place covers:

Pressure vessels in which the insulating means have a solid consistency.

F17C 2203/0308

Radiation shield

Definition statement

This place covers:

Pressure vessels in which the insulating means prevent radiation thermal transfer, like e.g. aluminum coating.

In this positive example from GB2454475, a radiation shield is wrapped around the vessel.

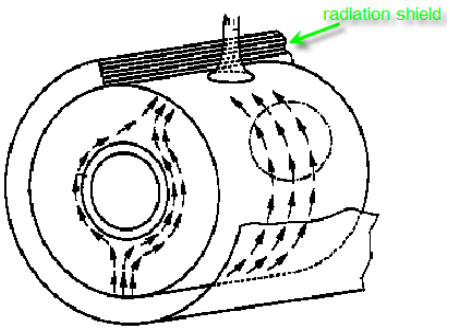

F17C 2203/0312

cooled by external means

Definition statement

This place covers:

Pressure vessels in which the radiation shield is cooled and the heat is transferred by external means.

In this positive example from GB2414539, a cooling medium in form of a fluid is circulated and in contact with the shield.

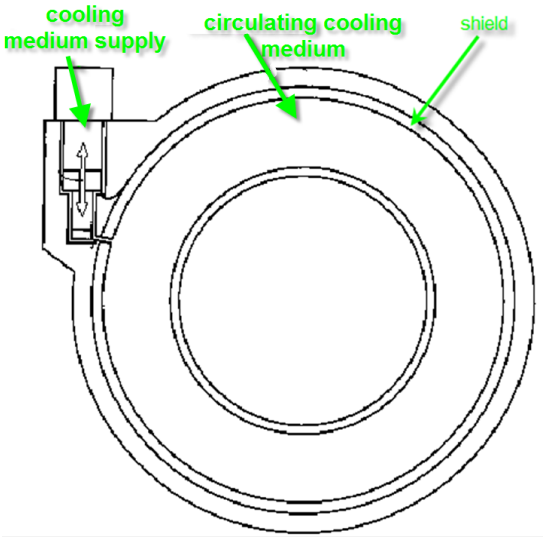

F17C 2203/0316

cooled by vaporised gas from the interior

Definition statement

This place covers:

Pressure vessels containing gas in a liquefied phase and in which the radiation shield is cooled by the gas in vaporized form. Usually, the gas has a cooling effect because of its discharge.

In this positive example from GB2025029, a constant flow of very cold vaporised helium serves as coolant for the shield.

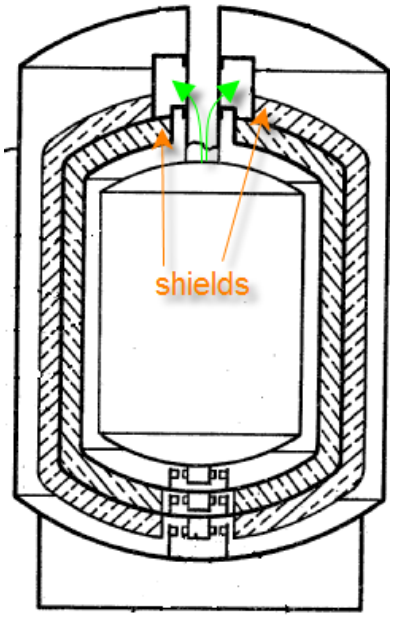

F17C 2203/032

Multi-sheet layers

Definition statement

This place covers:

Pressure vessels comprising a layer made of several thin reflective foils, sometimes in form of pads.

In this positive example from US6521077, multi-sheet blankets form insulation pads.

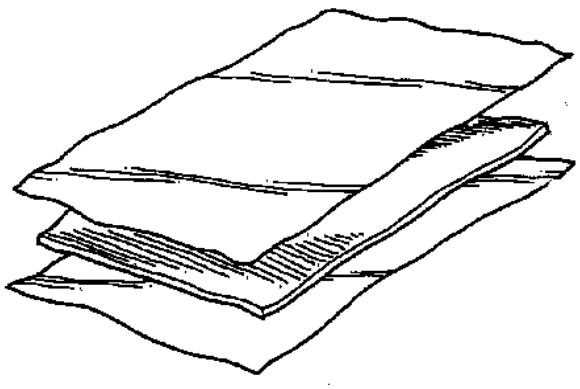

In this negative example from US3133659 a thicker ribbon is wrapped around the vessel in an overlapping helical scheme.

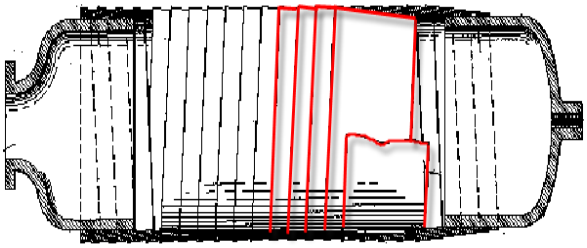

In this negative example from US3092148, a thicker sheet is wrapped several times around the vessel.

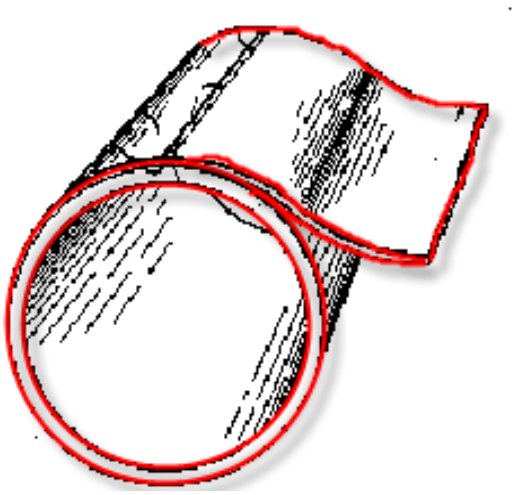

F17C 2203/0325

Aerogel

Definition statement

This place covers:

Pressure vessels in which the insulating means is made of aerogel, a material comprising about 99% pores.

In this positive example from US2010146992, granular aerogel surrounds the inner vessel.

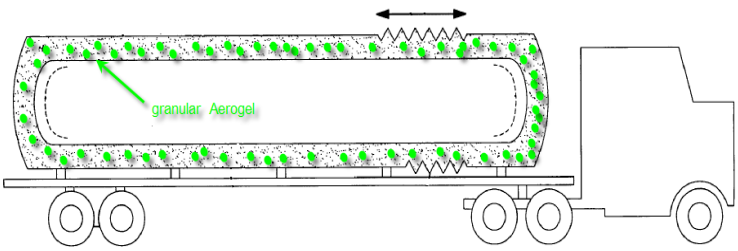

F17C 2203/0329

Foam

Definition statement

This place covers:

Pressure vessels in which the insulating means is made of foam

In this positive example from EP0166492, foam is integrated in the wall.

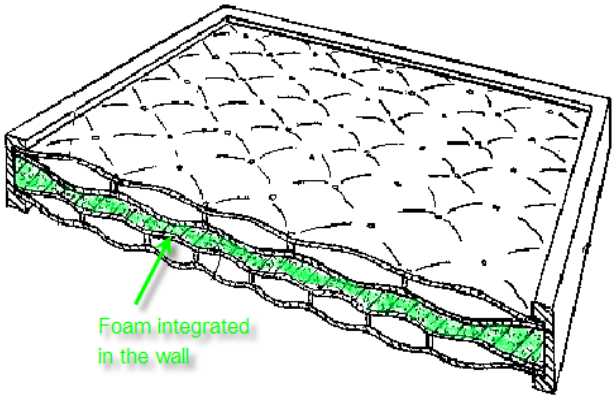

F17C 2203/0333

Polyurethane

Definition statement

This place covers:

Pressure vessel in which the foam is made of polyurethane.

F17C 2203/0337

Granular

Definition statement

This place covers:

Pressure vessels in which the insulating means is in granular form.

In this positive example from AU439960, ceramic balls are integrated in the wall.

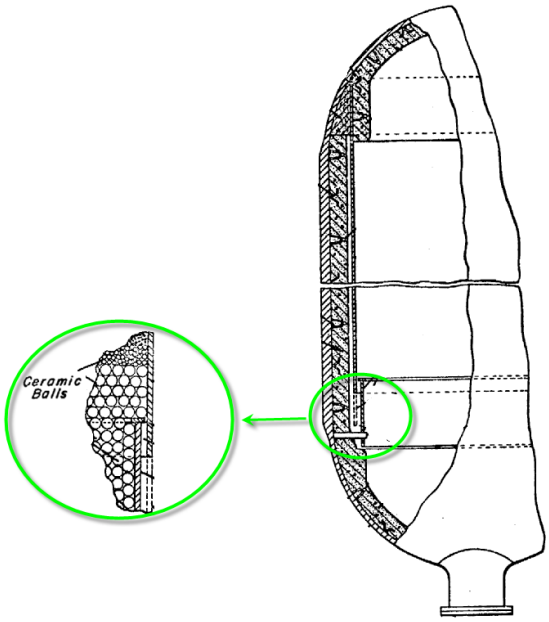

F17C 2203/0341

Perlite

Definition statement

This place covers:

Pressure vessels in which the insulating means is perlite in granular form.

In this positive example from WO2006001711, perlite is integrated in the wall.

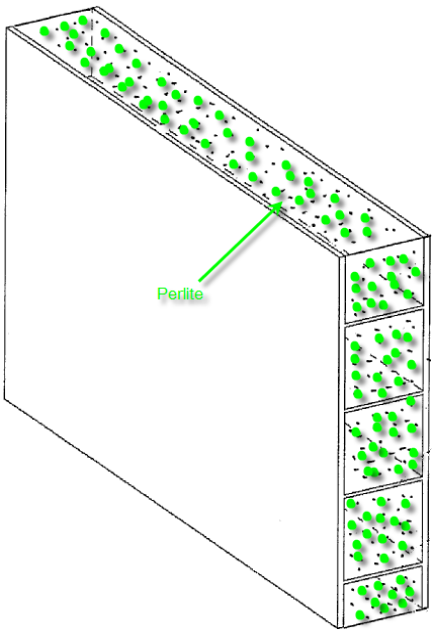

F17C 2203/0345

Fibres

Definition statement

This place covers:

Pressure vessels in which the insulating means is in fiber form.

In this positive example from US2004256395, fibers fulfill the explicit task of thermal insulation.

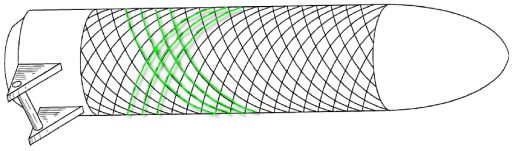

In this negative example from DE3103646, insulation is not mentioned in relation with the fibers.

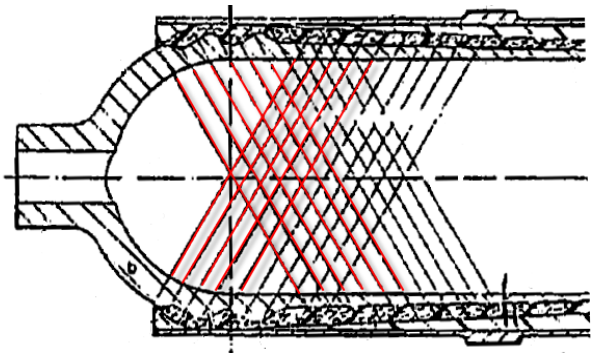

F17C 2203/035

Glass wool

Definition statement

This place covers:

Pressure vessels in which the fibers are glass wool.

In this positive example from US4366917, two glass wool fiber layers are used.

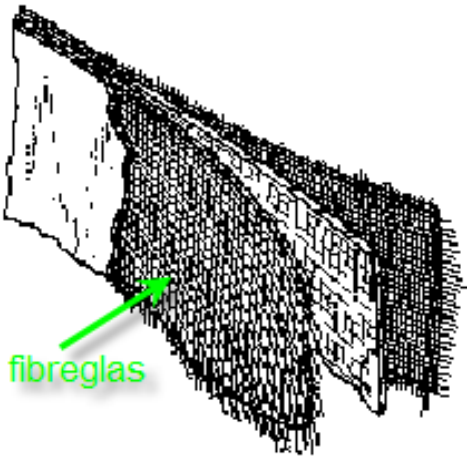

In this positive example from US3583351, a single glass wool fibre layer is used.

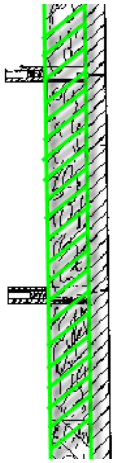

F17C 2203/0354

Wood

Definition statement

This place covers:

Pressure vessels in which the insulating means is wood.

In this positive example from DE2349100, wooden heat insulation is used on a ship.

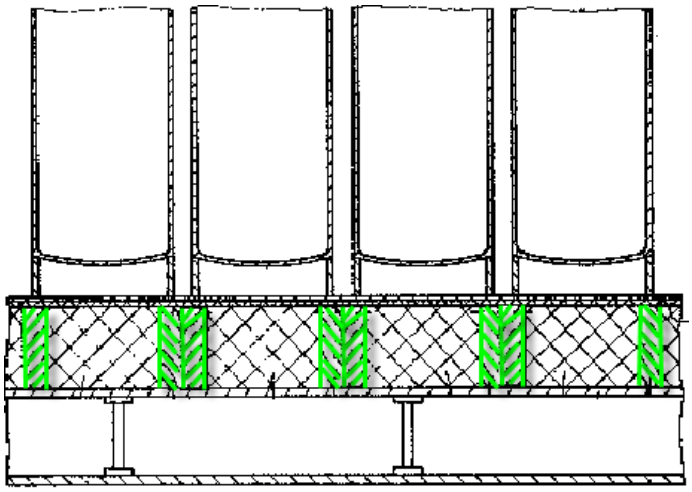

F17C 2203/0358

in form of panels

Definition statement

This place covers:

Pressure vessels in which the insulating means is in form of panels, usually placed next to each other.

In this positive example from EP0543686, insulation on a ship is in form of panels.

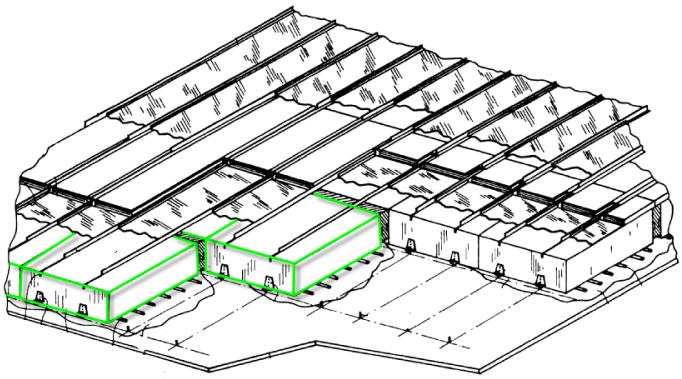

References

Informative references

Attention is drawn to the following places, which may be of interest for search:

Panels into ships	B63B 3/68

F17C 2203/0362

by liquid means

Definition statement

This place covers:

Pressure vessels in which the insulating means is in liquid form.

In this positive example from US2507778, a liquid serves as insulating means.

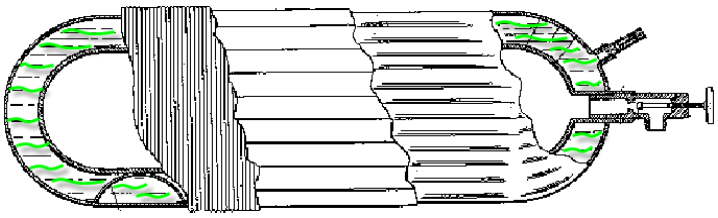

F17C 2203/0366

Cryogen

Definition statement

This place covers:

Pressure vessels in which the liquid insulating means is a cryogen.

In this positive example from WO2007026332, liquefied cryogenic gas at its boiling point is used for insulation

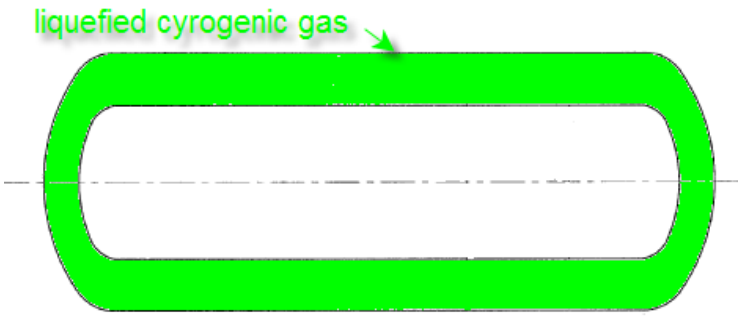

F17C 2203/037

Water

Definition statement

This place covers:

Pressure vessels in which the liquid insulating means is water.

In this positive example from US2009114290, water is the insulating means.

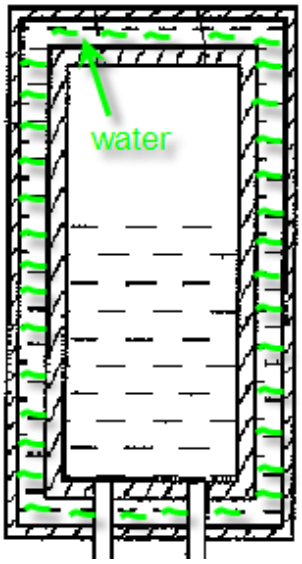

F17C 2203/0375

by gas

Definition statement

This place covers:

Pressure vessels in which the insulating means is gaseous.

In this positive example from WO2009147162, an insulating cavity is filled with gas.

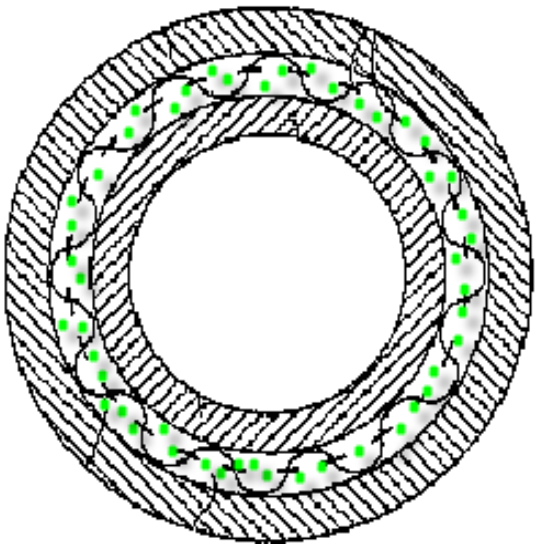

F17C 2203/0379

Inert

Definition statement

This place covers:

Pressure vessels in which the gaseous insulating means is an inert, non-reactive gas.

In this positive example from US3319431, an insulating cavity is filled with a non-combustible gas.

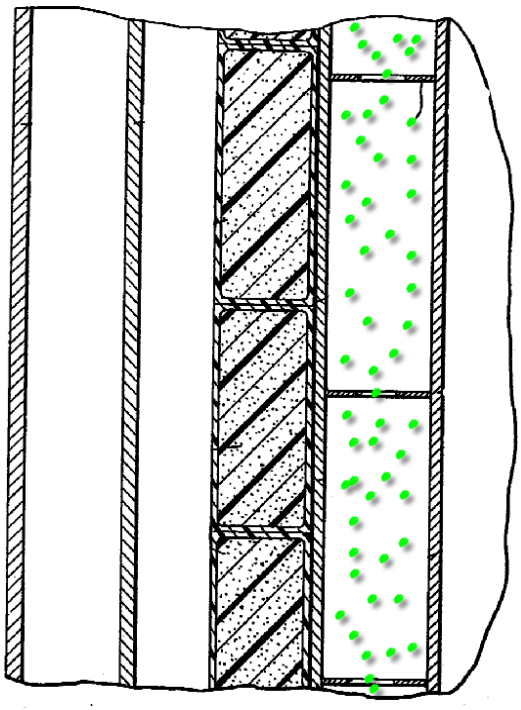

F17C 2203/0383

Air

Definition statement

This place covers:

Pressure vessels in which the gaseous insulating means is air.

In this positive example from GB832880, air surrounds the vessel.

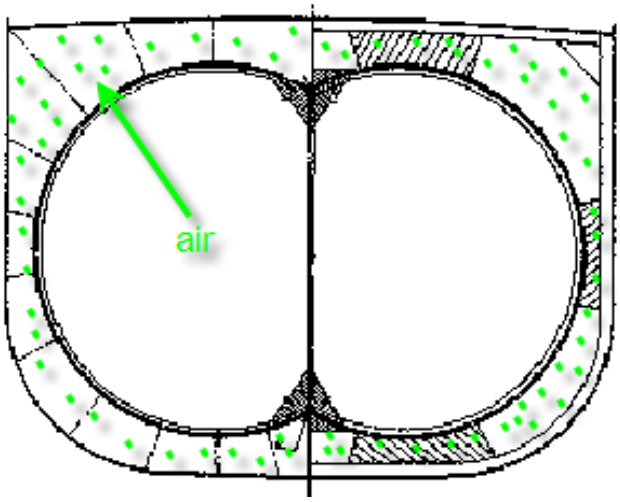

F17C 2203/0387

Cryogen

Definition statement

This place covers:

Pressure vessels in which the gaseous insulating means is a cryogen.

F17C 2203/0391

by vacuum

Definition statement

This place covers:

Pressure vessels in which the insulation is reached by evacuating an insulating cavity.

In this positive example from WO03018344, a vacuum cavity surrounds the vessel.

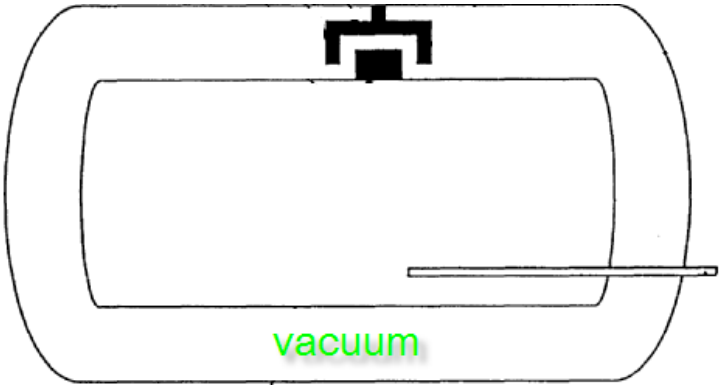

F17C 2203/0395

Getter

Definition statement

This place covers:

Pressure vessels in which the vacuum is maintained at a desired level by a getter, a reactive material used to remove traces of gas. The getter can be in form of a specific coating applied to the surface within the evacuated chamber.

In this positive example from WO9325843, the getter is placed in the intermediate evacuated space.

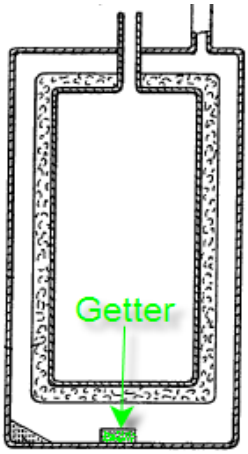

F17C 2203/06

Materials for walls or layers thereof; Properties or structures of walls or their materials

Definition statement

This place covers:

Pressure vessels for which the wall composition and layer structure and properties of these layers can be determined.

F17C 2203/0604

Liners

Definition statement

This place covers:

Pressure vessels comprising a liner, a solid layer located on the inner side of the vessel that prevents diffusion of the fluid and thus contact of the fluid with other layers and eventually corrosion. Liners are usually thin, and only moderately contribute to the mechanical resistance of the vessel.

In this positive example of EP0343098, a liner made of stainless steel is mounted in a pressure vessel for high-purity fluid. The term "liner" does not appear in the text.

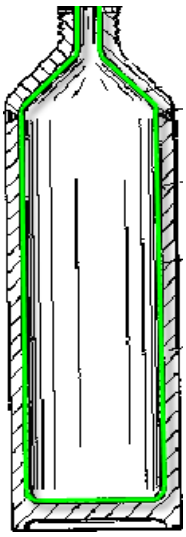

In this negative example from EP2166260 coating for corrosion protection is sprayed on the vessel surface.

Special rules of classification

A liner is counted as a layer.

A layer fulfilling all the requirements of a liner (solid layer on the inner side to prevent diffusion) is to be classified herein too, even if the word "liner" does not explicitly appear.

If the word "liner" appears in the document, but the functionality of this “liner” differs from the requirements of a liner (solid layer on the inner side to prevent diffusion), the document is to be classified herein too.

If the word "liner" appears in the document without any further explanation, the document is to be classified herein too.

Simple coatings for corrosion protection are not to be considered as a liner.

F17C 2203/0607

Coatings

Definition statement

This place covers:

Pressure vessels comprising a coating, a very thin painted or sprayed protection, usually against corrosion.

In this positive example from US2004089440, a coating is sprayed on the outside.

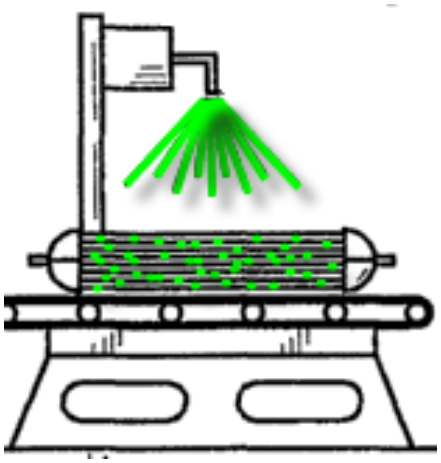

Special rules of classification

A coating is not is counted as a layer.

A layer fulfilling all the requirements of a coating (very thin, painted or sprayed) is to be classified here too, even if the word "coating" does not explicitly appear.

If the word "coating" appears in the document, like for cement coating, but the functionality of this “coating” differs from the requirements of a coating (very thin, painted or sprayed), the document is to be classified here too,

If the word "coating" appears in the document without any further explanation, the document is to be classified here too.

Synonyms and Keywords

In patent documents, the following words/expressions are often used as synonyms:

- "paint and "fabric"

F17C 2203/0609

Straps, bands or ribbons

Definition statement

This place covers:

Pressure vessels comprising a layer made of usually adjacently wrapped bands, straps or ribbons.

In this positive example from NL6413265, ribbons are wrapped around a cylindrical vessel.

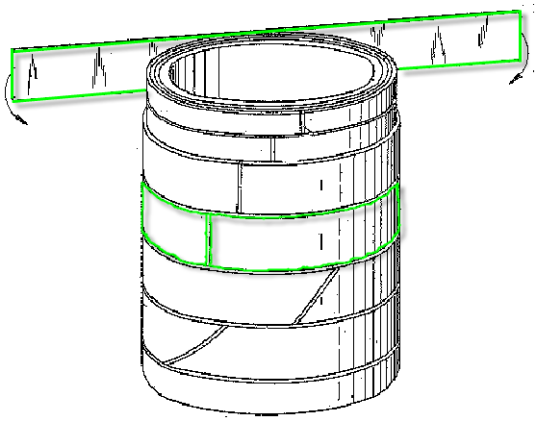

In this negative example from GB1518156, filaments, which have no ribbon form, are wrapped around a vessel.

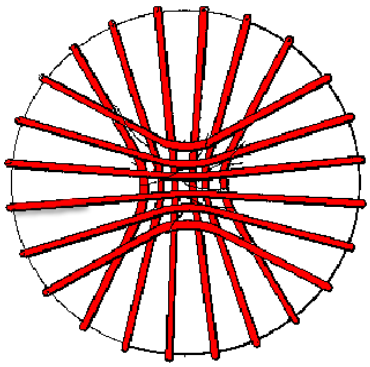

Special rules of classification

Straps, bands or ribbons are counted as a layer.

F17C 2203/0612

Wall structures

Definition statement

This place covers:

Pressure vessels for which the number of walls and/or layers can be counted.

In this positive example from WO02074616, the drawing indicates 4 layers (layers 1-4), but from the definition of "layer", these 4 filament wraps are counted as one single layer.

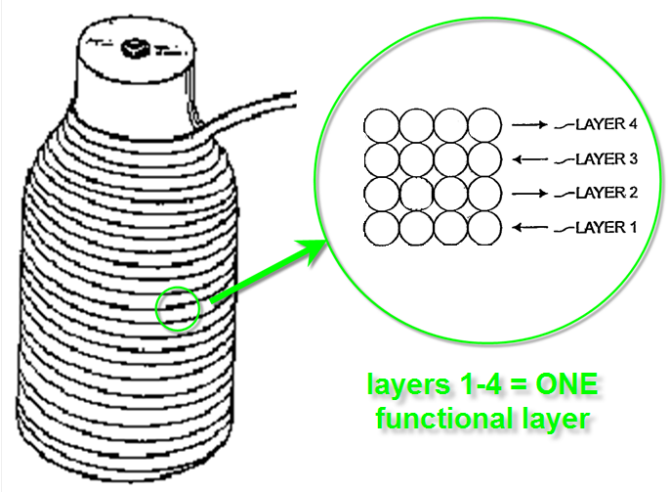

In this positive example from GB1150131, the vessel comprises an inner envelope, and an outer envelope for thermal insulation. The inner envelope counts for a single wall (with one layer). Thermal insulation is per convention not counted as wall or layer.

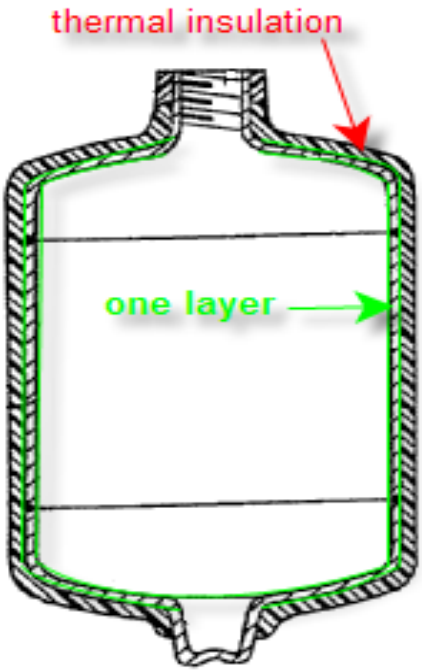

F17C 2203/0614

Single wall

Definition statement

This place covers:

Pressure vessels comprising only one wall made of one or several layers.

In this negative example from GB2440350, thermal insulation cavities separate and thus create 3 walls.

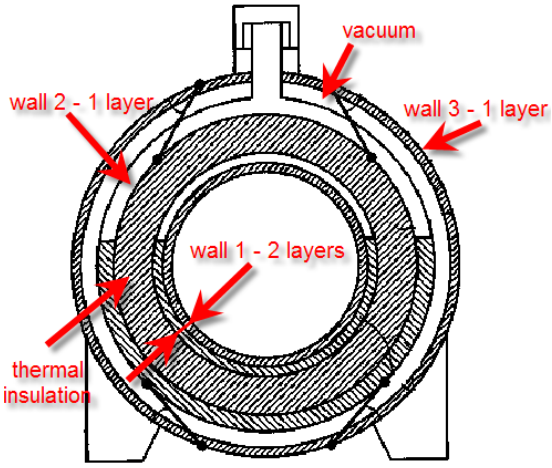

F17C 2203/0617

with one layer

Definition statement

This place covers:

Pressure vessels, for which the single wall comprises only one layer.

In this positive example from NL7906614, the metallic vessel has the simplest construction with one single layered wall.

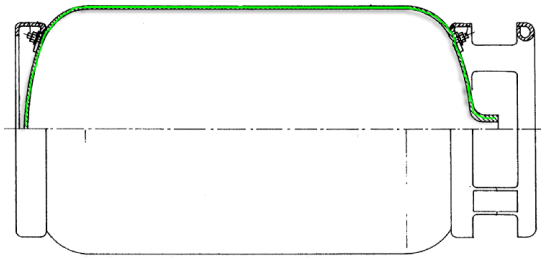

F17C 2203/0619

with two layers

Definition statement

This place covers:

Pressure vessels, for which the single wall comprises two layers.

In this positive example from DE3716426, two layers are visible.

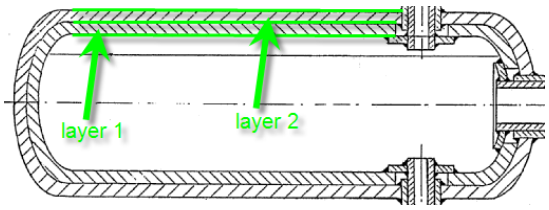

F17C 2203/0621

with three layers

Definition statement

This place covers:

Pressure vessels, for which the single wall comprises three layers.

In this positive example from US3140006, three layers are visible.

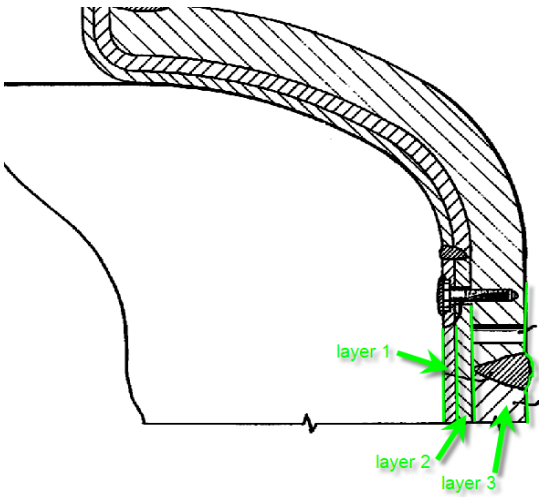

F17C 2203/0624

with four or more layers

Definition statement

This place covers:

Pressure vessels, for which the single wall comprises four or more layers.

In this positive example from US3372828, the single wall is made of 9 layers.

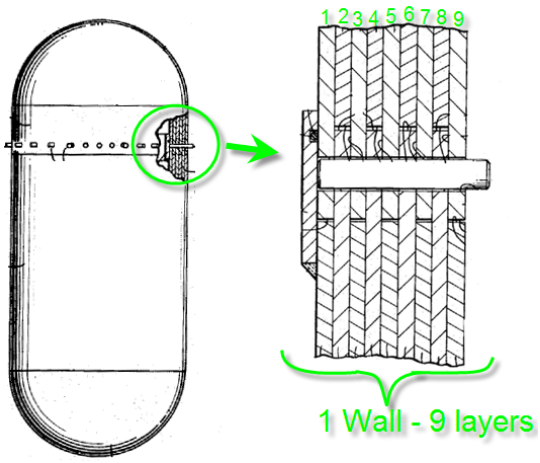

F17C 2203/0626

Multiple walls

Definition statement

This place covers:

Pressure vessels comprising two or more walls. Usually, thermal insulating envelopes or cavities filled with a different fluid than the fluid stored, generate walls.

In this negative example from GB2249377, the stored fluid fills the cavities between of the pressure vessel: only one wall is counted.

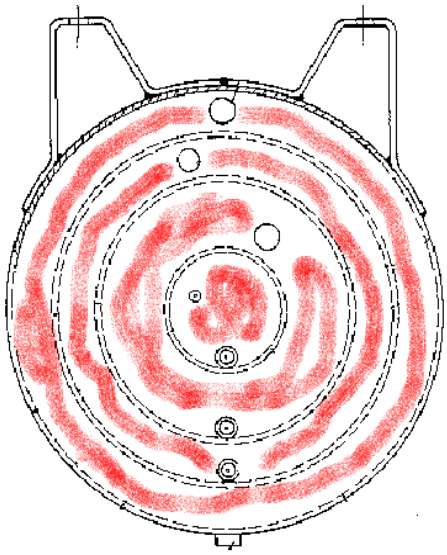

same fluid in every chamber

Special rules of classification

For pressure vessels with two or more walls, no layers are counted.

F17C 2203/0629

Two walls

Definition statement

This place covers:

Pressure vessels comprising two walls

In general the two structural walls are separated by thermal insulation.

In this positive example from WO0031459, two separated packages of layers defining two walls are separated by a space.

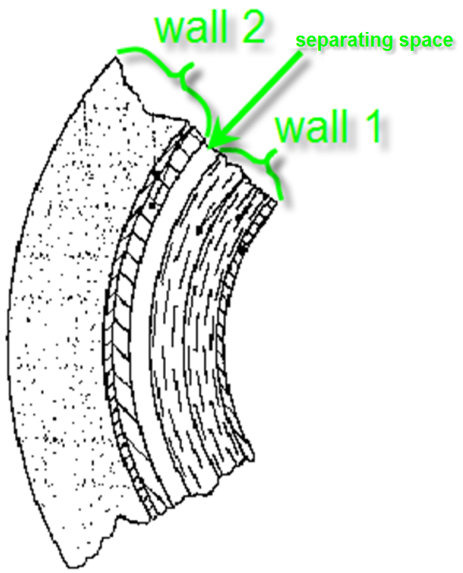

This negative example from DE3716426, one single wall with two layers is visible, without any separating space.

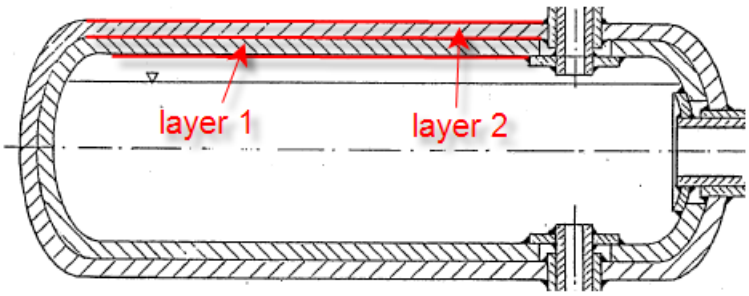

F17C 2203/0631

Three or more walls

Definition statement

This place covers:

Pressure vessels comprising three or more walls.

In this positive example from US2002023926, three walls are counted.

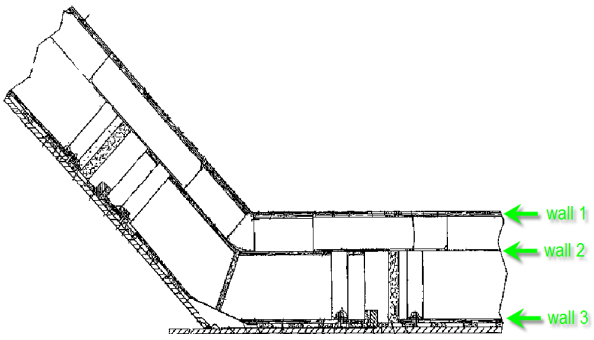

F17C 2203/0634

Materials for walls or layers thereof

Definition statement

This place covers:

Pressure vessels for which the wall's or layer's material is defined.

Special rules of classification

Material of exterior arrangement, insulation, assembling means, connecting components etc. are not considered.

F17C 2203/0636

Metals

Definition statement

This place covers:

Pressure vessels for which the wall's or layer's material comprises metal.

F17C 2203/0639

Steels

Definition statement

This place covers:

Pressure vessels for which the wall's or layer's metal comprises steel, that consists mostly of iron and has a carbon content between 0.2% and 2.1% by weight.

F17C 2203/0641

Non-magnetic steels

Definition statement

This place covers:

Pressure vessels for which the wall's or layer's material comprises non-magnetic steel.

F17C 2203/0643

Stainless steels

Definition statement

This place covers:

Pressure vessels for which the wall's or layer's material comprises stainless steel.

F17C 2203/0646

Aluminium

Definition statement

This place covers:

Pressure vessels for which the wall's or layer's material comprises aluminium.

F17C 2203/0648

Alloys or compositions of metals

Definition statement

This place covers:

Pressure vessels for which the wall's or layer's material comprises an alloy, or for which a composition of the metal is disclosed.

Special rules of classification

Only alloys for which another groups are not foreseen are classified here.

Metals designated as "alloy" in the text, without revealing the exact composition, are classified here.

Alloys, for which the composition is revealed, are classified here, and in the group of the composing metal. Example: Al3Cr2Mg is classified as alloy and as aluminum.

The revelation of the composition of an alloy can be in any form: chemical formulae, by volume, by weight etc.

F17C 2203/0651

Invar

Definition statement

This place covers:

Pressure vessels for which the wall's or layer's material comprises FeNi36 or 64FeNi (US), known as Invar, a nickel steel alloy notable for its uniquely low coefficient of thermal expansion and resistance to cryogenic temperatures.

F17C 2203/0653

Lead

Definition statement

This place covers:

Pressure vessels for which the wall's or layer's material comprises lead (Pb).

F17C 2203/0656

in form of filaments

Definition statement

This place covers:

Pressure vessels for which the wall's or layer's material is made of metal filaments.

In this positive example from GB48534, a metal filament winding forms a layer.

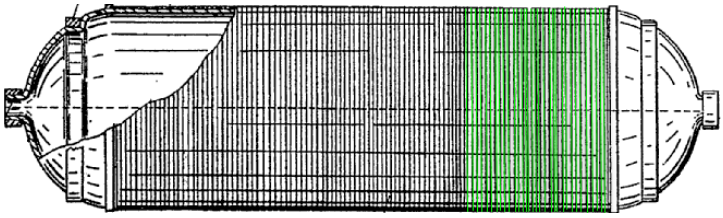

In this negative example from GB1518156, individual metal filaments do not form a layer.

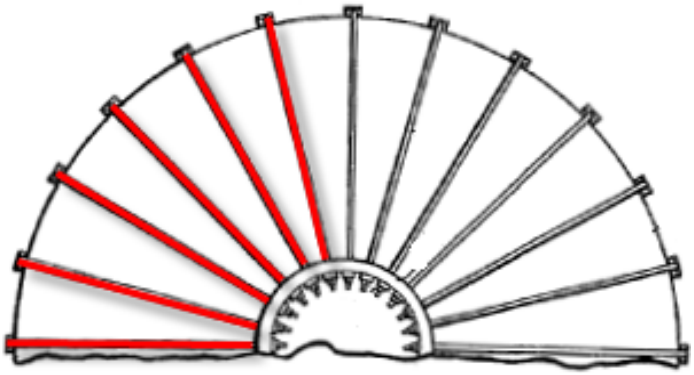

F17C 2203/0658

Synthetics

Definition statement

This place covers:

Pressure vessels for which the wall's or layer's material is synthetic

F17C 2203/066

Plastics

Definition statement

This place covers:

Pressure vessels for which the wall's or layer's synthetic material comprises plastics.

F17C 2203/0663

in form of fibers or filaments

Definition statement

This place covers:

Pressure vessels for which the wall's or layer's synthetic material is made of fibers or filaments.

In this positive example from EP0744274, a synthetic filament winding forms a layer.

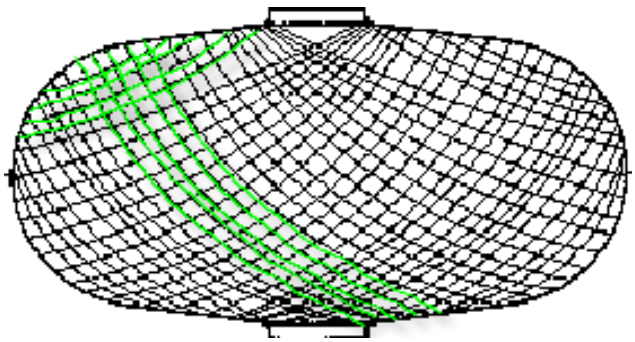

Synonyms and Keywords

In patent documents, the following words/expressions are often used as synonyms:

- "radial" and "circumferential"

F17C 2203/0665

radially wound

Definition statement

This place covers:

Pressure vessels on which fibers or filaments are wound at right angle to the main axis of the vessel.

In this positive example from GB48534, filaments are radially wound around the middle part of the cylinder.

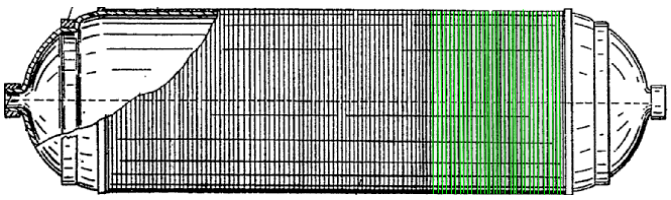

Synonyms and Keywords

In patent documents, the following words/expressions are often used as synonyms:

- "radial" and "circumferential"

F17C 2203/0668

axially wound

Definition statement

This place covers:

Pressure vessels on which fibers or filaments are wound in a way aligned with the main axis of the vessel.

In this positive example from US2009308874, filaments are axially wound around the middle part of the cylinder.

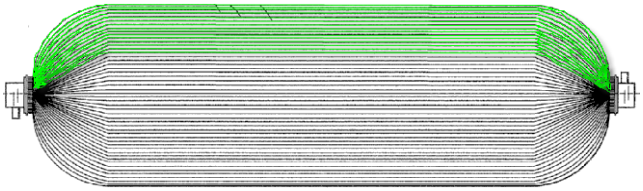

In this positive example from WO0157429, filaments are axially and radially wound.

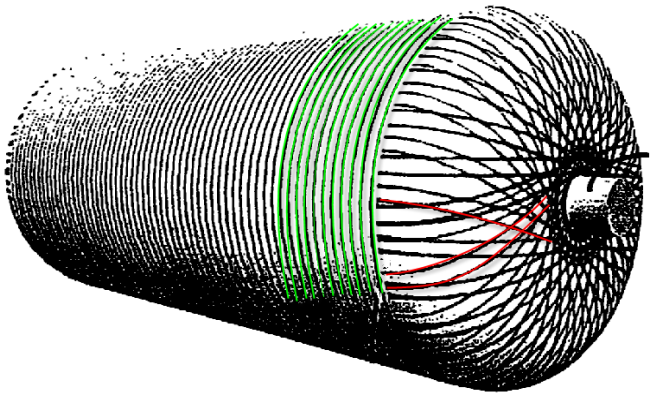

F17C 2203/067

helically wound

Definition statement

This place covers:

Pressure vessels on which fibers or filaments are helically wound.

In this positive example from GB2253041, filaments are helically wound.

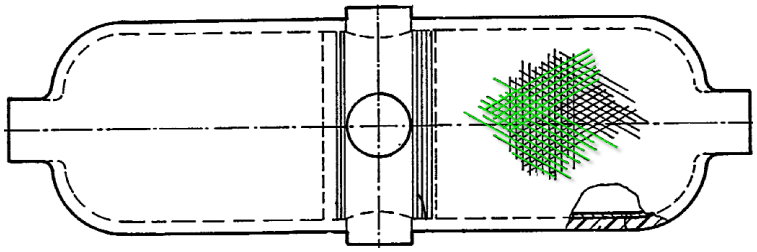

F17C 2203/0673

Polymers

Definition statement

This place covers:

Pressure vessels on which fibers or filaments are embedded in a polymer.

In this positive example from WO03016777, fiber are embedded in a resin matrix.

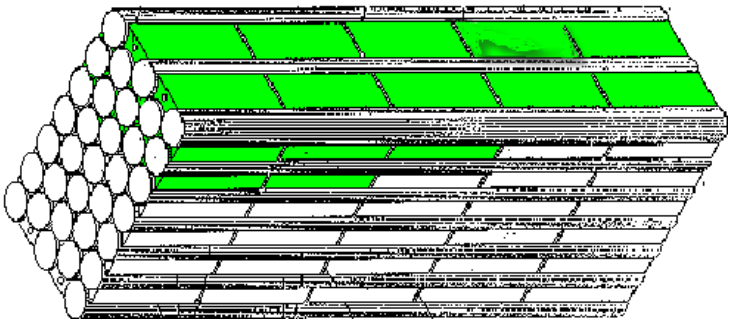

Glossary of terms

In this place, the following terms or expressions are used with the meaning indicated:

FRM	composite (fiber reinforced resin matrix)

Synonyms and Keywords

FRM	Fibre reinforced resin

In patent documents the following words "FRM" and "composite" are often used as synonyms.

F17C 2203/0675

with details of composition

Definition statement

This place covers:

Pressure vessels for which the composition of the wall's or layer's synthetic material is disclosed.

Special rules of classification

The revelation of the composition can be in any form: chemical formulae, by volume, by weight etc.

F17C 2203/0678

Concrete

Definition statement

This place covers:

Pressure vessels for which the wall's or layer's material comprises concrete or cementitious materials.

References

Informative references

Attention is drawn to the following places, which may be of interest for search:

Foundations, excavations, embankments, underground or underwater	E02D

F17C 2203/0682

with liquid or gas layer

Definition statement

This place covers:

Pressure vessels for which the wall's or layer's material is made of a fluid in liquid or gaseous form.

In this positive example from GB1343187, a pressurized liquid fills the free space.

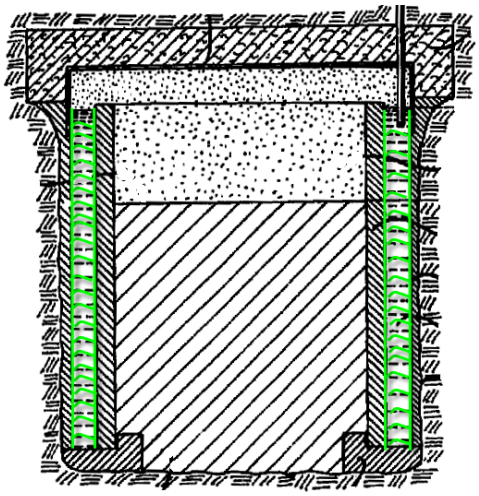

In this negative example from EP0624752, a gaseous thermal insulation surrounds the vessel.

This is no load-bearing layer in the sense of the definition of "layer".

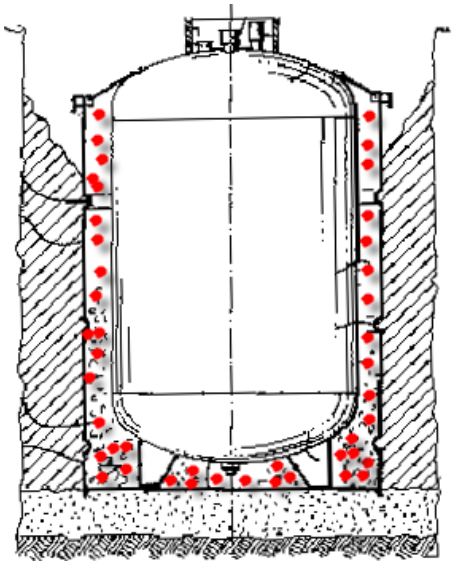

F17C 2203/0685

flexible

Definition statement

This place covers:

Pressure vessels for which the wall's or layer's material is flexible.

In this positive example from GB2435505, the whole vessel is flexible.

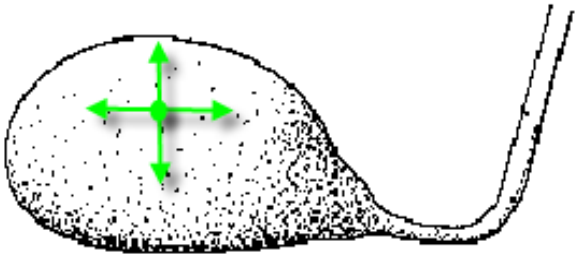

In this negative example from US4982870, the shape of the vessel is flexible, but not the material.

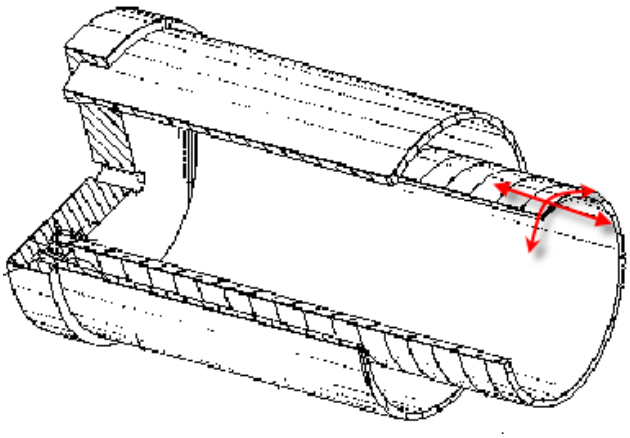

References

Limiting references

This place does not cover:

Bladders	F17C 2201/018

F17C 2203/0687

superconducting

Definition statement

This place covers:

Pressure vessels for which the wall's or layer's material is superconducting.

F17C 2203/069

Break point in the wall

Definition statement

This place covers:

Pressure vessels for which the wall's or layer's material comprises a break point, i.e. an intentionally weakened section supposed to break first at overpressure or when punctured.

In this positive example from GB2080436, a weakened tab member is located at the bottom section.

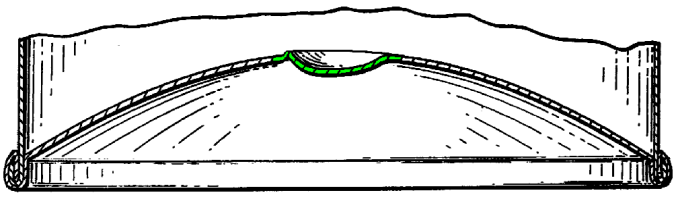

In this positive example from WO2004113787, a weakened part is located at the top section.

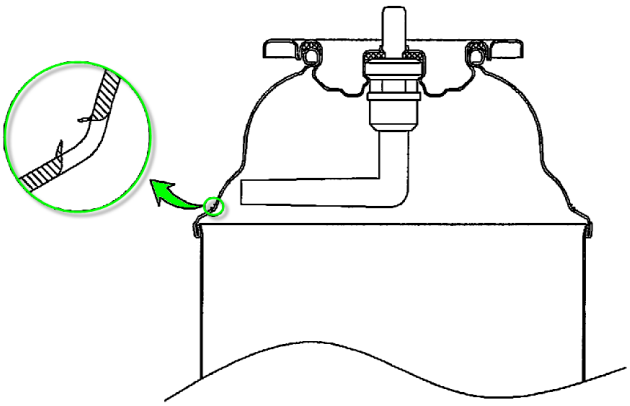

F17C 2203/0692

transparent

Definition statement

This place covers:

Pressure vessels for which the wall's or layer's material is transparent.

In this positive example from US4589562, a transparent layer allows to consult the label underneath.

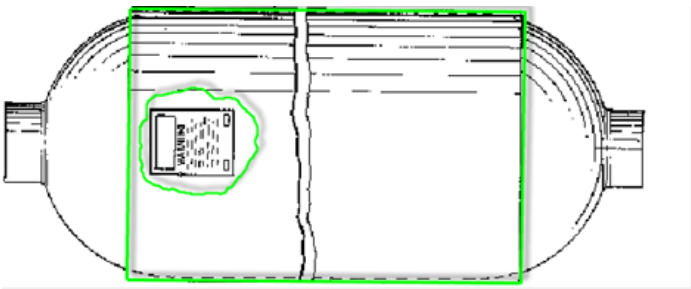

F17C 2203/0695

pre-constrained

Definition statement

This place covers:

Pressure vessels for which the wall's or layer's material is pre-constrained.

In this positive example from WO9935036, the inner layer is pre-constrained.

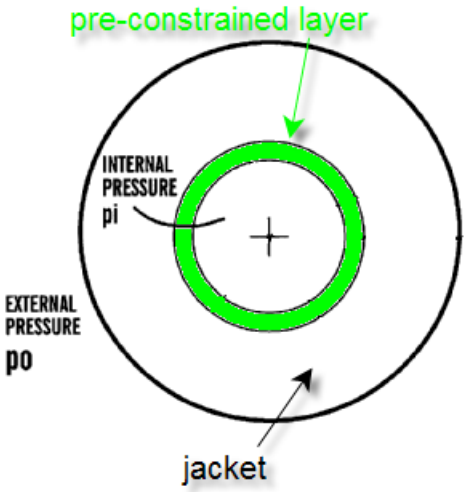

F17C 2203/0697

comprising nanoparticles

Definition statement

This place covers:

Pressure vessels for which the wall's or layer's material comprises nanoparticles, usually sized between 1 and 100 nanometers.

References

Informative references

Attention is drawn to the following places, which may be of interest for search:

Nanotechnology	**Y01N**

F17C 2205/00

Vessel construction, in particular mounting arrangements, attachments or identifications means

Definition statement

This place covers:

Means related to the stand or mounting of pressure vessels, to devices attached to it or in fluid connection with it, and to identification means.

F17C 2205/01

Mounting arrangements

Definition statement

This place covers:

Mounting arrangements allow the mounting of the pressure vessel but are not necessary for the structural integrity of the vessel, i.e. to avoid its bursting.

F17C 2205/0103

Exterior arrangements

Definition statement

This place covers:

Mounting arrangements external to the pressure vessels.

F17C 2205/0107

Frames

Definition statement

This place covers:

Exterior arrangement in form of an external frame, usually for protection or transport.

In this positive example from EP1522786, a frame surrounds the vessel.

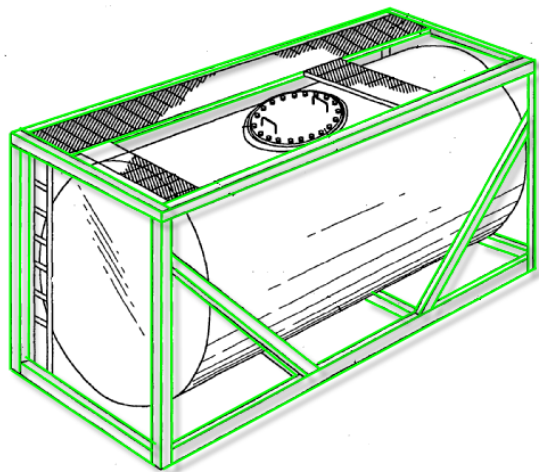

F17C 2205/0111

Boxes

Definition statement

This place covers:

Exterior arrangement in form of an box in which the pressure vessel is contained, usually for protection or transport.

In this positive example from US4523548, 3 pressure vessels are mounted inside a common box.

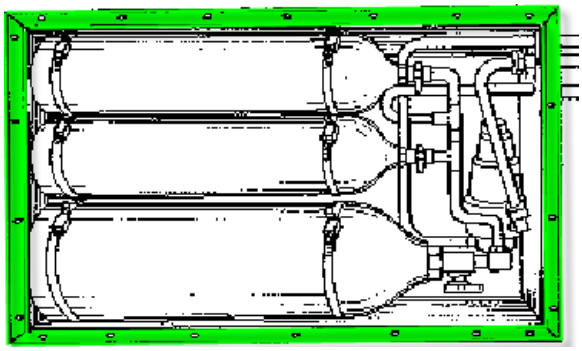

References

Informative references

Attention is drawn to the following places, which may be of interest for search:

Enclosures; Chambers	B01L 1/00

F17C 2205/0115

Dismountable protective hulls

Definition statement

This place covers:

Exterior arrangement in form of a dismountable hull to protect the vessel e.g. made out of neoprene, to protect from impacts.

In this positive example from US2001037549, two sections of composite fiber protect the vessel from bumps.

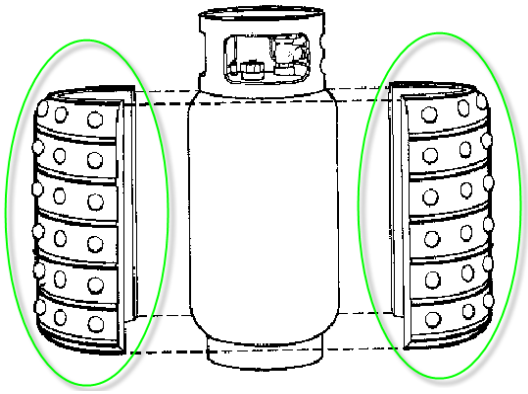

In this positive example from DE102007006047, the hull is welded and thus not dismountable.

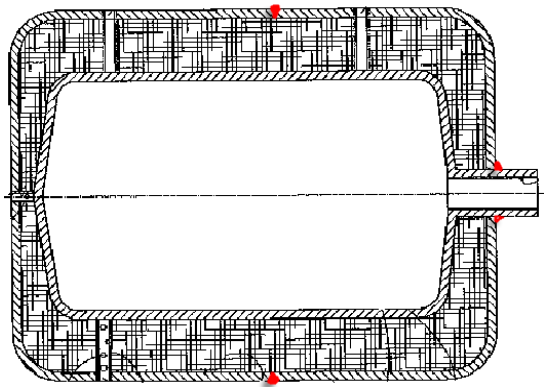

F17C 2205/0119

Vessel walls form part of another structure

Definition statement

This place covers:

Exterior arrangement which is also part of the vessel, the vessel wall itself fulfilling a double function: containing the fluid and constituting the external structure in which the vessel is mounted, e.g. a wing of a plane being at the same time the liquefied fuel tank.

In this positive example from EP1431096, the car frame is a vessel wall.

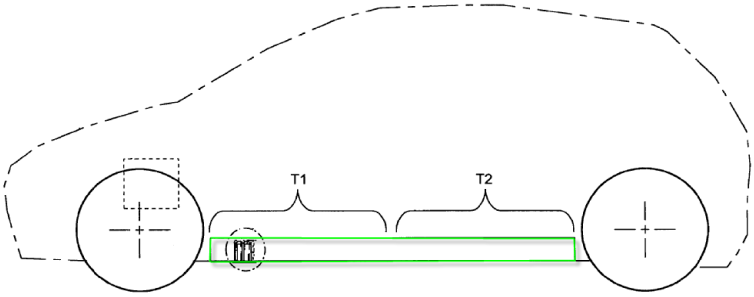

In this positive example from US3640237, the ship hull is a vessel wall.

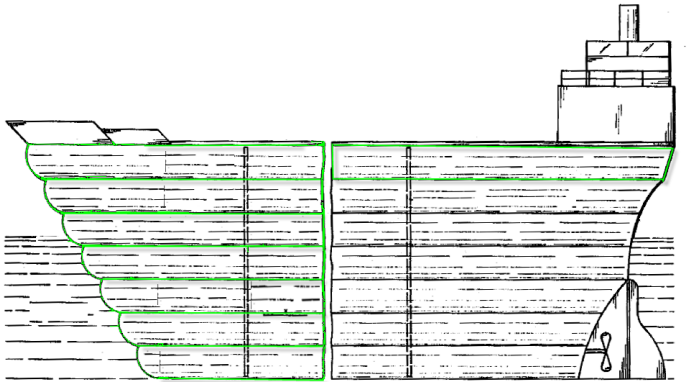

F17C 2205/0123

characterised by number of vessels

Definition statement

This place covers:

Count of the number of pressure vessels and their external arrangements

F17C 2205/0126

One vessel

Definition statement

This place covers:

Count of one single pressure vessel and its external arrangement.

In this positive example from EP1150059, a single spherical vessel is held in a frame.

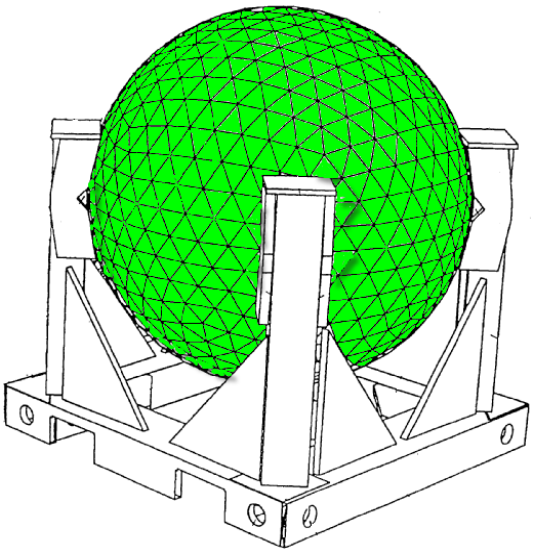

In this negative example from BE471532, there is no exterior arrangement.

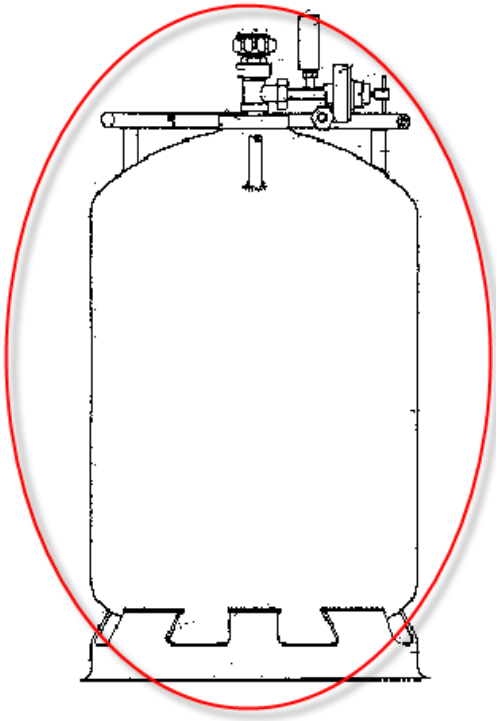

F17C 2205/013

Two or more vessels

Definition statement

This place covers:

Count of two or more pressure vessels and their external arrangements.

In this positive example from US4523548, 3 pressure vessels are mounted inside a common box.

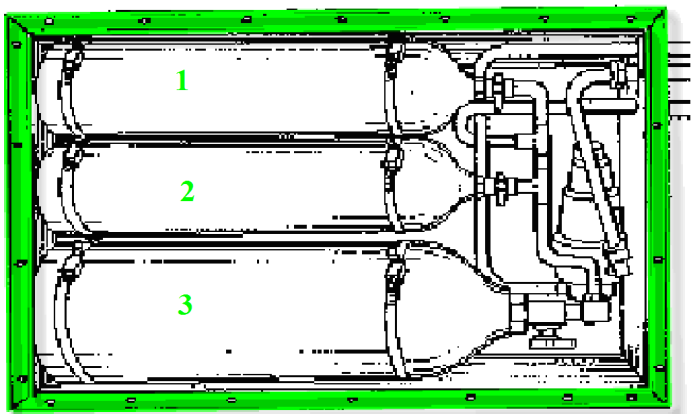

F17C 2205/0134

characterised by the presence of fluid connection between vessels

Definition statement

This place covers:

Count of two or more pressure vessels comprising at least one fluid connection.

In this positive example from US2005205137, several cylindrical pressure vessels are connected by several fluid connections.

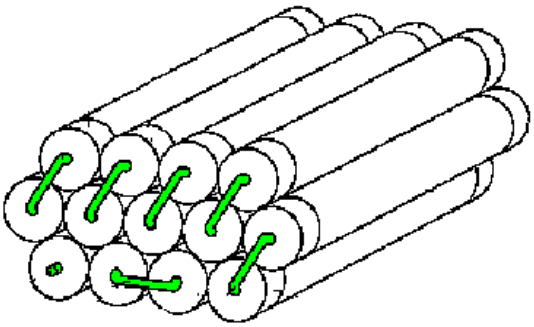

In this negative example from EP1150059, no fluid connection is established.

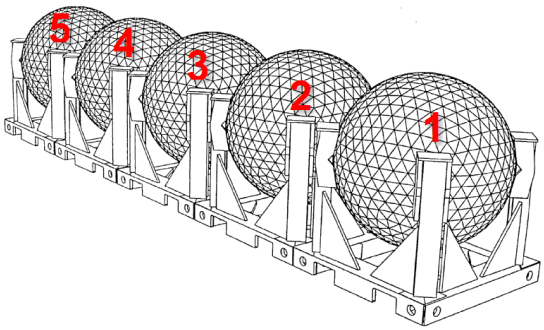

In this negative example from DE4009248, the aligned cartridges are not in fluid connection.

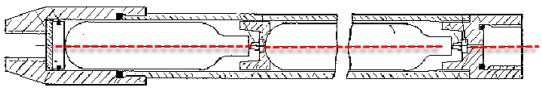

F17C 2205/0138

bundled in series

Definition statement

This place covers:

Two or more pressure vessels in which the fluid connection is a serial fluid connection.

In this positive example from FR1222726, fluid from the right vessel needs to pass into the first vessel.

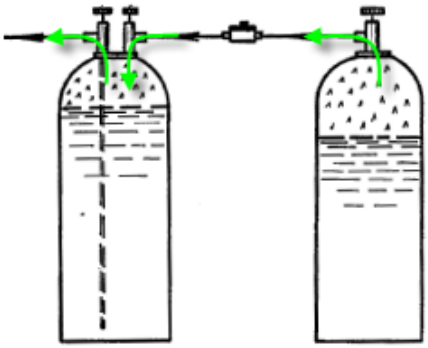

Special rules of classification

In most cases, there is no clear serial connection, so that generally, only the word "series" in the text can trigger classification in this group.

Glossary of terms

In this place, the following terms or expressions are used with the meaning indicated:

In series	Per analogy to an electrical connection in series, vessels are in fluid connection in a row, so that when fluid is removed, it has to pass through the vessel next in the row.

F17C 2205/0142

bundled in parallel

Definition statement

This place covers:

Two or more pressure vessels in which the fluid connection is a fluid connection in parallel.

In this positive example from DE3024251, fluid can be filled into or emptied from each vessel independently.

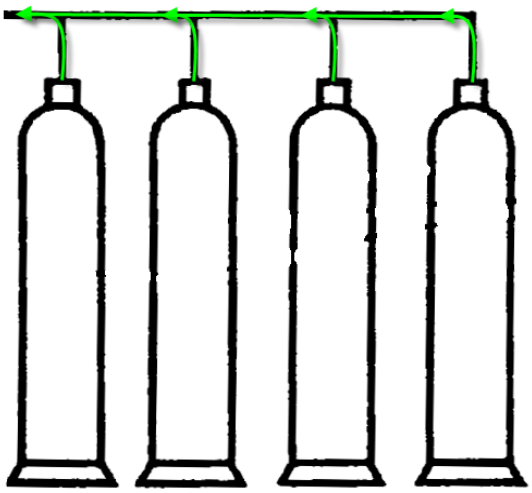

Special rules of classification

In most cases, there is no clear parallel connection, so that mainly the word "parallel" in the text triggers classification in this group.

Glossary of terms

In this place, the following terms or expressions are used with the meaning indicated:

In parallel	Per analogy to an electrical connection in parallel, fluid connection in which vessels have an individual fluid connection, so that when fluid is removed, it has not to pass through another vessel.

F17C 2205/0146

with details of the manifold

Definition statement

This place covers:

Fluid connection between several vessels with a manifold, wherein details of the manifold (e.g. single valves, detailed connections, way of distributing fluid) are visible or explained.

In this positive example from US2007215209, the inner structure of the manifold is defined.

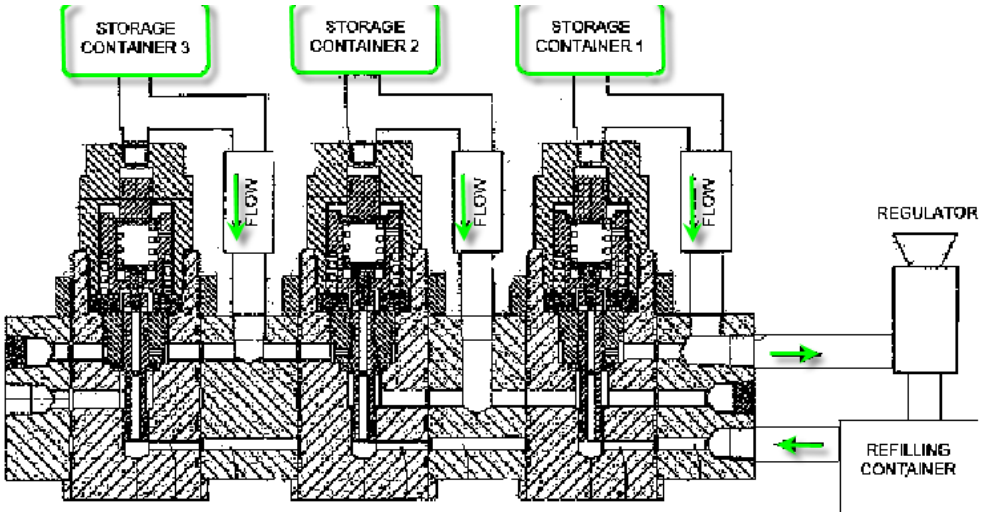

Glossary of terms

In this place, the following terms or expressions are used with the meaning indicated:

Manifold	Fluid connection which is common to several vessels.

F17C 2205/0149

Vessel mounted inside another one

Definition statement

This place covers:

Arrangement of two distinct pressure vessels, in which one vessel is mounted inside the other and in which each vessel could have be operated as an independent vessel in terms of withholding the

internal pressure. Each vessel contains fluid to be stored, and not a fluid for another purpose like insulation. The fluid contained in the different vessels can be different.

In this positive example from US1692670, two clearly distinguishable cylindrical vessels are mounted one inside the other.

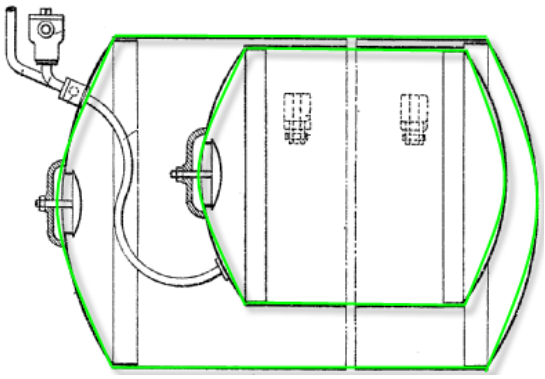

In this negative example from GB2249377, the same fluid occupies a single vessel separated in several chambers. There are no independent vessels.

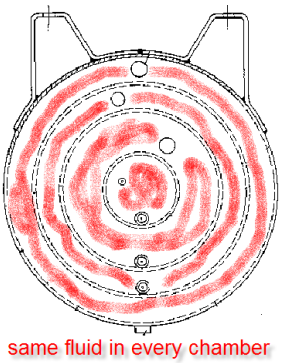

same fluid in every chamber

In this negative example from GB412814, the common wall of both chambers is dominant.

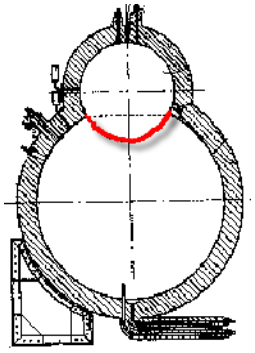

Special rules of classification

Each independent vessel has to be considered separately with regard to its wall structure (number of layers, material etc...).

Vessels that share a common wall have to be considered individually: if the common wall is dominant, than a classification herein is not necessary; if the common wall is not extended, an independent vessel can be defined and classified herein.

F17C 2205/0157

for transport

Definition statement

This place covers:

A device that indicate a specific way of transporting the vessel.

In this positive example from FR1281179, cavities for forks or for a forklift are foreseen.

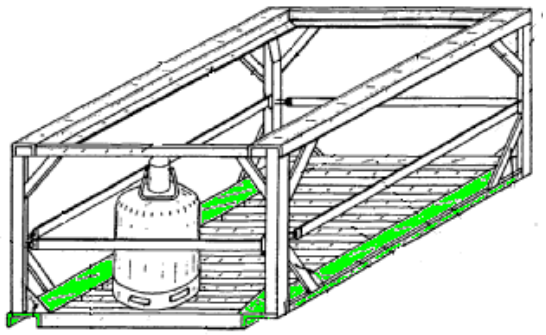

In this positive example EP1643182, it is explained that the form is ergonomic so as to easily lift the vessel by hand.

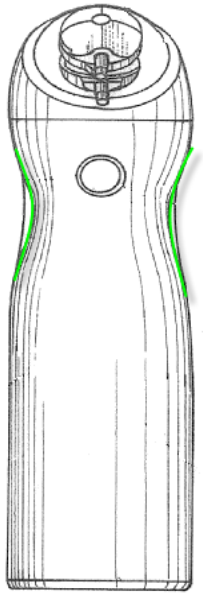

In this negative example from EP0034555, a small cartridge is, by its size, easy to lift by human force and easy to transport, but there is not specific device that suggests a certain mode of transport.

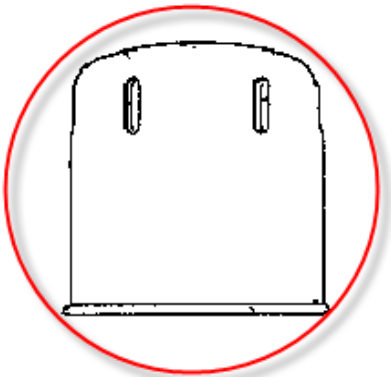

F17C 2205/0161

with wheels

Definition statement

This place covers:

The device for transport comprising wheels

In this positive example from US2006261567, wheels can be attached to the vessel.

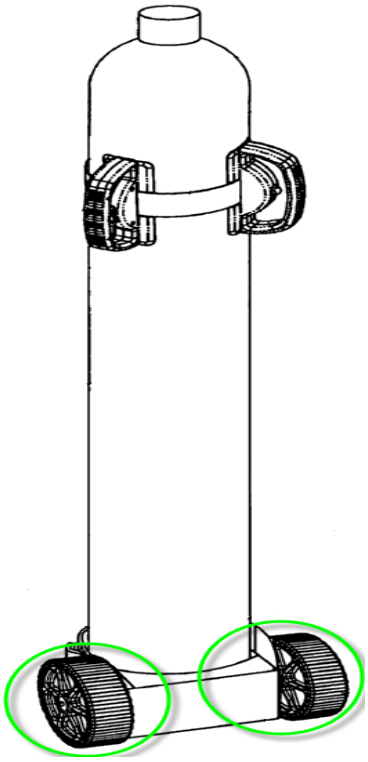

References

Informative references

Attention is drawn to the following places, which may be of interest for search:

Hand carts having only one axis carrying one or more transport wheels	B62B 1/00

Hand carts having more than one axis carrying transport wheels	B62B 3/00
Gas bottles for domestic use	B62B 2202/022

Special rules of classification

Specific vehicles with wheels like e.g. trailers and trucks transporting pressure vessels are classified in groups in F17C 2270/0165.

F17C 2205/0165

with handgrip

Definition statement

This place covers:

The device for transport comprising a handgrip.

In this positive example from NL7906614, the handgrip is on the vessel.

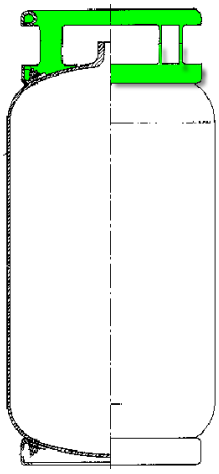

In this positive example from WO0111285, the handgrip is mounted on a transporting box.

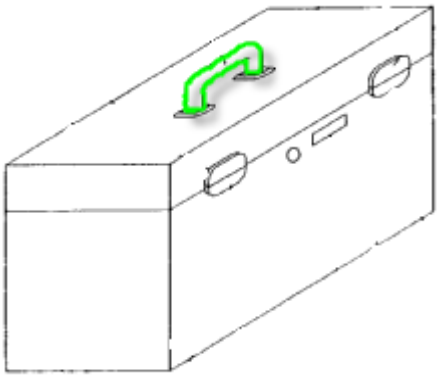

F17C 2205/0169

stackable

Definition statement

This place covers:

A device allowing to stack vessels or groups of vessel upon each other.

In this positive example from US2010186426, a specific frame allows to stack groups of vessel.

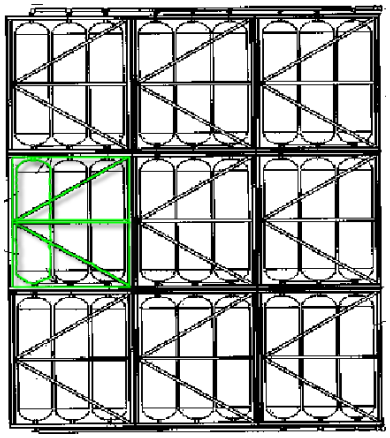

In this positive example from DE20010514U, a stacking device is mounted on the protection cap and fits with the mounting feet at the bottom of the vessel.

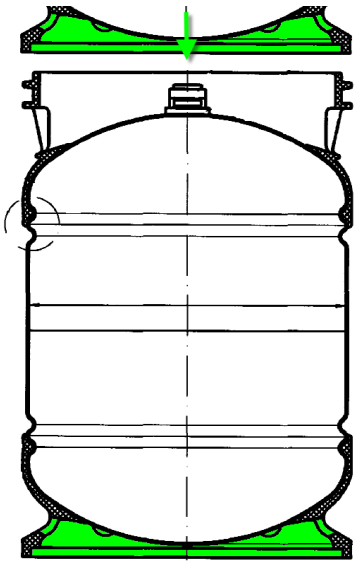

In this negative example from US4846088, the pressure vessels are piled on a ship, but without any detailed indication about a stacking device.

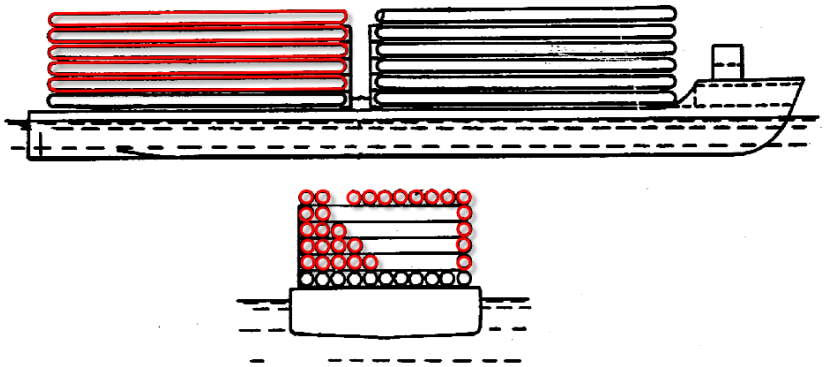

Synonyms and Keywords

In patent documents, the following words/expressions are often used as synonyms:

- "nestable and "stackable"

F17C 2205/0173

lockable

Definition statement

This place covers:

A device, e.g. a lock, preventing access to or removal of one or several vessels.

In this positive example from GB2171785, a safety lock holds a protective cap on the vessel.

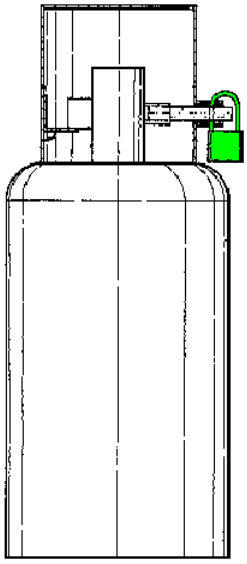

In this positive example from US2007109068, access to the vessel is prevented by a lock on a box.

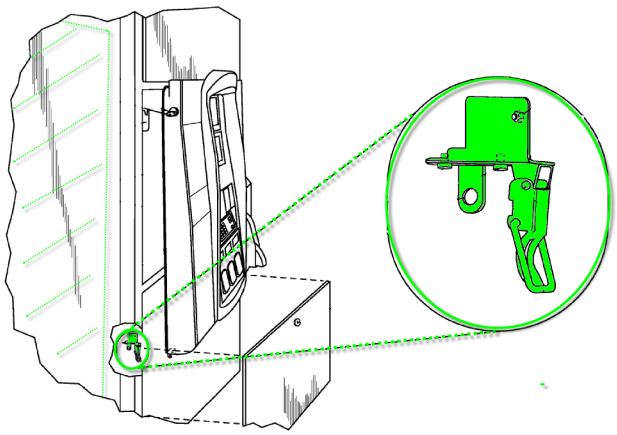

References

Informative references

Attention is drawn to the following places, which may be of interest for search:

Signalling or calling systems, Alarm systems	G08B

F17C 2205/0176

with ventilation

Definition statement

This place covers:

A device, e.g. a ventilator or ventilation openings, that support ventilation of the room or box in which the pressure vessel is stored.

In this positive example from EP1037269, two ventilators are mounted in the box wall.

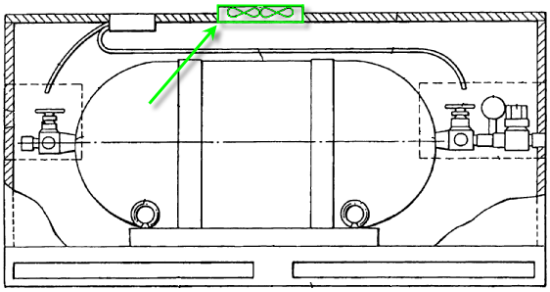

In this negative example from WO2007048953 a vent valve is mounted on the vessel, but not on a room or box in which the pressure vessel is stored.

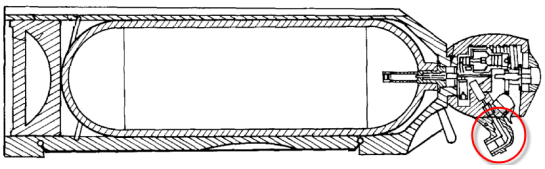

F17C 2205/018

Supporting feet

Definition statement

This place covers:

A device directly on the pressure vessel allowing an upright or lying fixed stable position.

In this positive example from GB412814, mounting feet are placed below a spherical vessel.

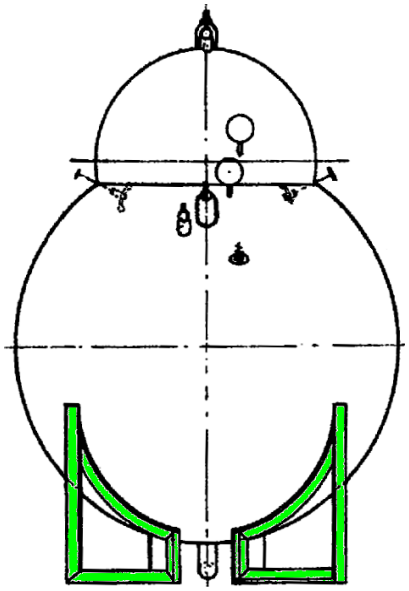

In this positive example from EP0826433, the bottom of the pressure vessel is formed so as to allow a stable upright position.

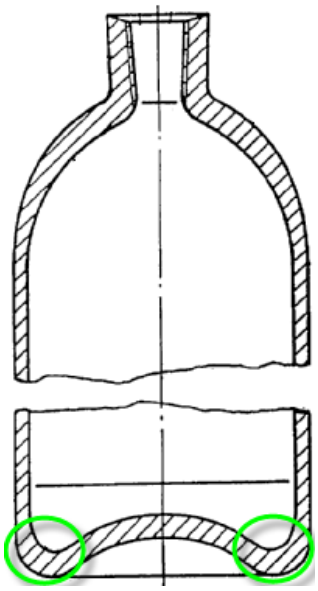

In this negative example from DE19952611, the flat bottom of the pressure vessel would allow an upright position, but there is no form that suggests mounting feet.

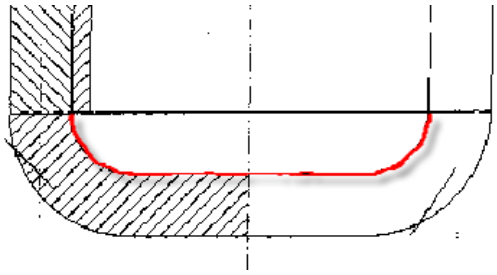

F17C 2205/0184

Attachments to the ground, e.g. mooring or anchoring

Definition statement

This place covers:

A device allowing not only positioning of the pressure vessel to the ground but an attaching, mooring or anchoring.

In this positive example from DE2447246, the vessel is attached to the sea ground.

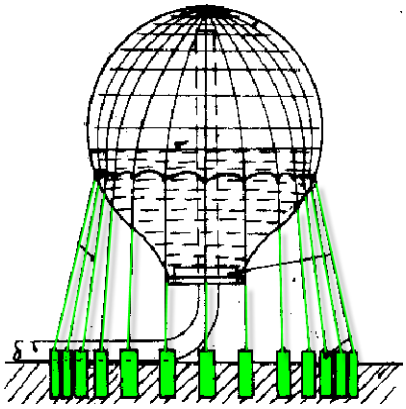

In this positive example from US6345933, the vessel is attached to the ground by ropes

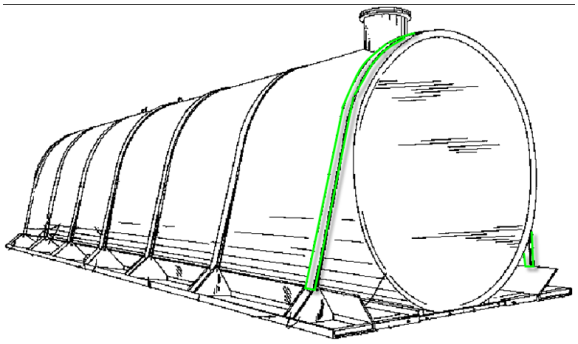

In this negative example from DE2633607, the supporting elements are not anchored to the ground.

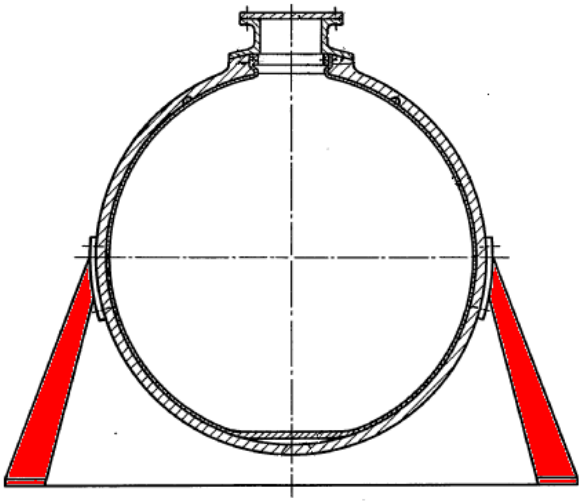

F17C 2205/0188

Hanging up devices

Definition statement

This place covers:

A device allowing hanging up and lifting of the vessel.

In this positive example from DE20204336U, the vessel is hung up with crooks.

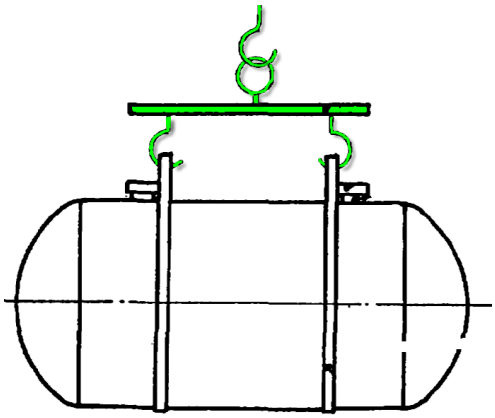

In this negative example from GB2440350, the inner vessel is hung in the outer vessel by suspension means.

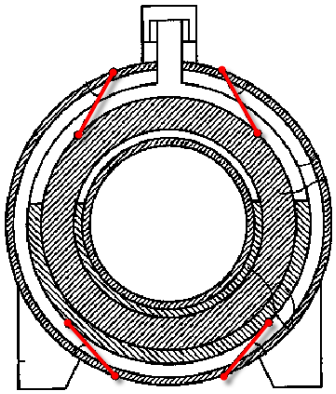

Special rules of classification

Hanging up one vessel inside another is dealt with in F17C 2203/014, "suspension means".

F17C 2205/0192

with external bearing means

Definition statement

This place covers:

A device allowing to maintain the vessel in an external structure.

In this positive example from EP1060936, the vessel can be attached into a vehicle by screws.

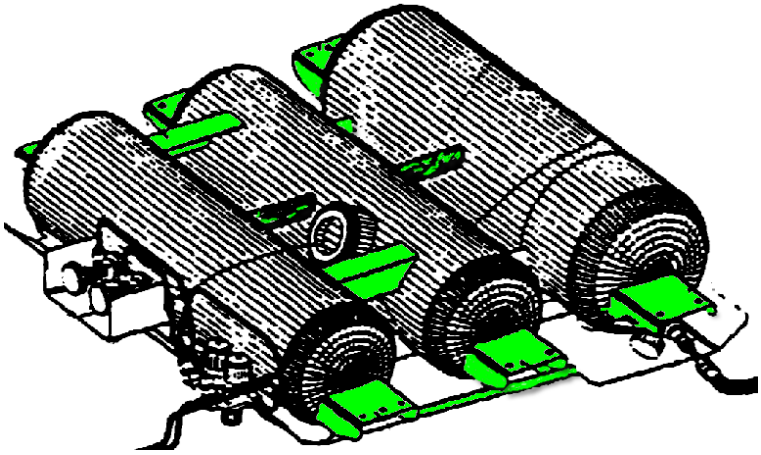

In this positive example from WO2010020431, circumferential bearing means hold the vessel upright.

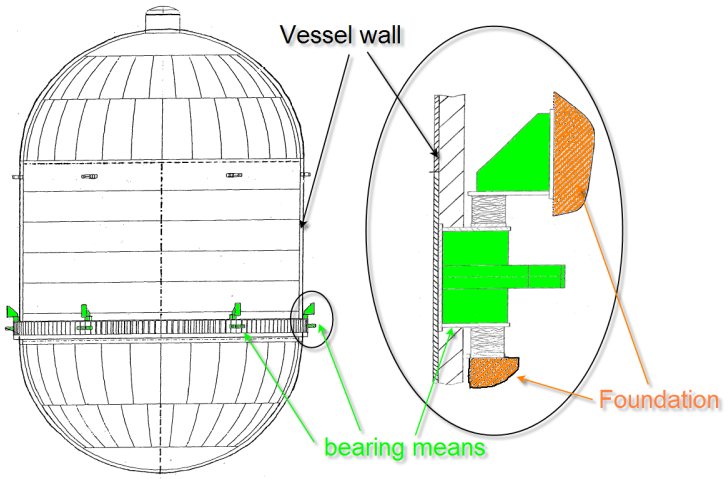

F17C 2205/0196

with shock absorbing means

Definition statement

This place covers:

A device comprising means absorbing shocks.

In this positive example from US2011147390, a shock absorbing padding is placed at the bottom of the tank.

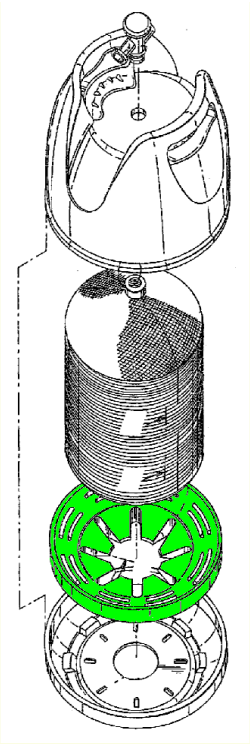

F17C 2205/03

Fluid connections, filters, valves, closure means or other attachments

Definition statement

This place covers:

Devices through which the fluid contained in the vessel flows or may flow.

F17C 2205/0302

Fittings, valves, filters, or components in connection with the gas storage device

References

Informative references

Attention is drawn to the following places, which may be of interest for search:

Filling nozzles	**B67D5/37**

F17C 2205/0305

Bosses, e.g. boss collars

Definition statement

This place covers:

Bosses and boss collars for which details related to the mounting, the sealing or the attachment to the vessel are available.

In this positive example from US2010072209, boss and boss collar are detailed.

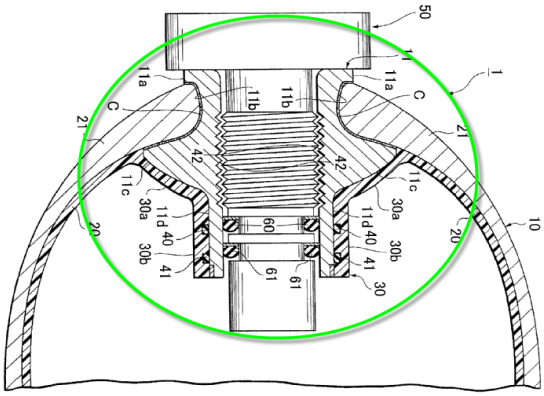

Glossary of terms

In this place, the following terms or expressions are used with the meaning indicated:

Boss	The zone around a circulate opening of the pressure vessel.
Boss collar	Particular zone of the boss, at which the boss is in contact with the vessel body

F17C 2205/0308

Protective caps

Definition statement

This place covers:

Device for protecting the boss of a pressure vessel, and the valves mounted thereon, from impact. This device can be a prolonged part of the vessel wall.

In this positive example from BE1006503, the protection is flat.

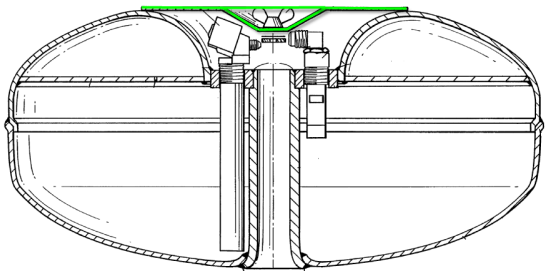

In this positive example from FR1120882, the protection surrounds the valve.

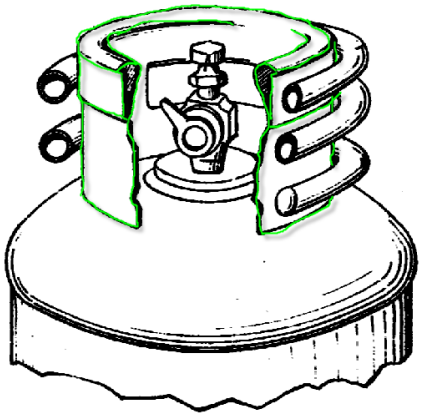

References

Informative references

Attention is drawn to the following places, which may be of interest for search:

Pressure vessels	F16J 12/00
Covers or similar closure members for pressure vessels in general	F16J 13/00
Covers with safety devices, e.g. to prevent opening prior to pressure release	F16J 13/24
Sealings	F16J 15/00
Covers for housings	F16K 7/12

F17C 2205/0311

Closure means

Definition statement

This place covers:

Device for permanently closing the vessel openings, allowing only exceptionally an opening

In this positive example from FR1435928, a closure device is mounted on the vessel.

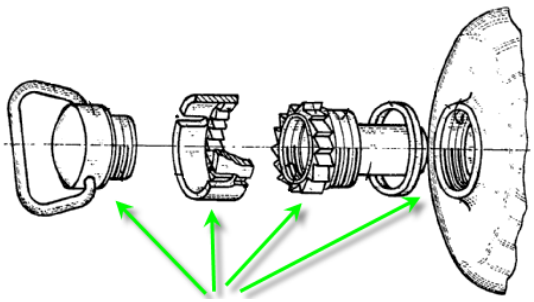

In this positive example from GB291061, a closure device is screwed on the vessel.

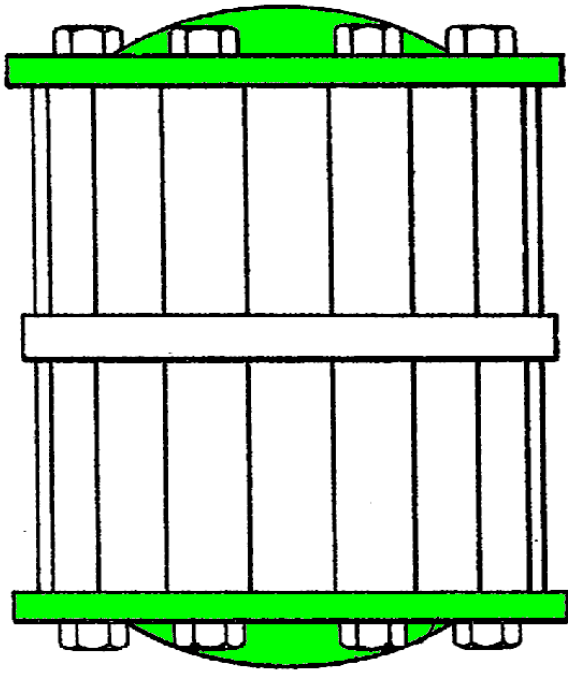

References

Limiting references

This place does not cover:

Valves	F17C 2205/0323
Pressure regulators	F17C 2205/0338

F17C 2205/0314

breakable, e.g. with burst discs

Definition statement

This place covers:

Closure means with a weakened zone bursting when a limit pressure is reached.

In this positive example from US4219126, the closure mean ruptures at a thinner weak zone

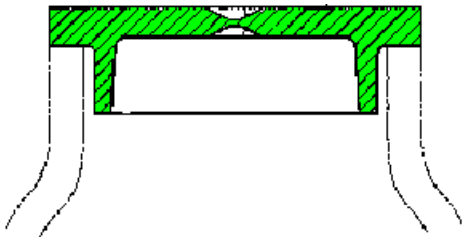

References

Limiting references

This place does not cover:

Weakened zones in the vessel wall itself	F17C 2203/069

Synonyms and Keywords

In patent documents, the following words/expressions are often used as synonyms:

- "rupture" and "burst"

F17C 2205/0317

fusing or melting

Definition statement

This place covers:

Closure means with a heat sensitive zone fusing or melting when a limit temperature is reached.

In this positive example from US2004159352, a melting device is placed in a manifold.

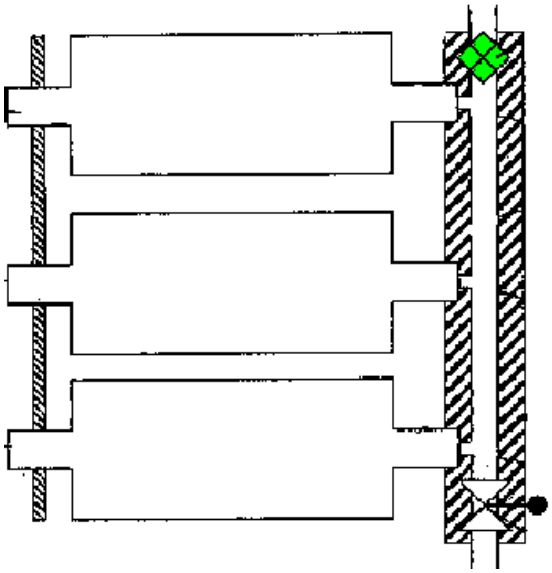

F17C 2205/032

pierceable

Definition statement

This place covers:

Closure means with a weakened zone to be easily pierced or punctured.

In this positive example from EP0155407, the cartridge discloses a zone to be punctured by a needle.

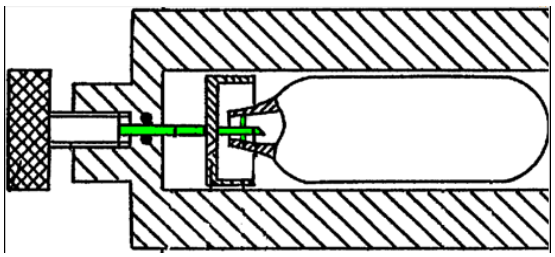

Synonyms and Keywords

In patent documents, the following words/expressions are often used as synonyms:

- "pierce" and "puncture"

F17C 2205/0323

Valves

Definition statement

This place covers:

Valves through which the fluid contained in the vessel flows or may flow.

References

Informative references

Attention is drawn to the following places, which may be of interest for search:

Valves for pressure vessels	F16K 1/30

Special rules of classification

Valves related to other processes, like the cooling process, are not classified.

F17C 2205/0326

electrically actuated

Definition statement

This place covers:

Valves with electrical actuation, usually a solenoid.

In this positive example from EP1990568, a solenoid valve is disclosed.

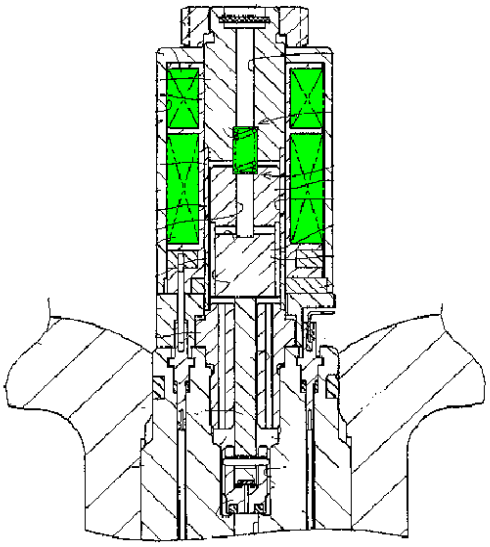

F17C 2205/0329

manually actuated

Definition statement

This place covers:

Valves with a manual actuation.

In this positive example from BE716158, the manual actuation is materialized by a handle on top.

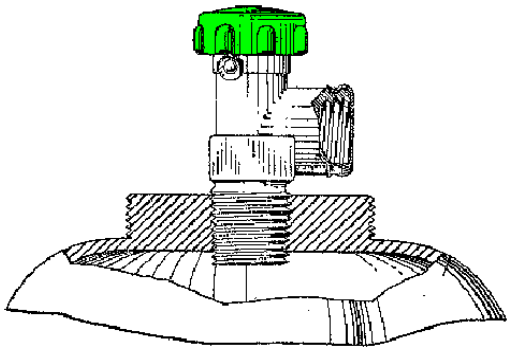

F17C 2205/0332

Safety valves or pressure relief valves

Definition statement

This place covers:

Valves the opening of which is triggered by dangerous state of the fluid, usually overpressure.

In this positive example from EP1318347, gas is evacuated at overfilling.

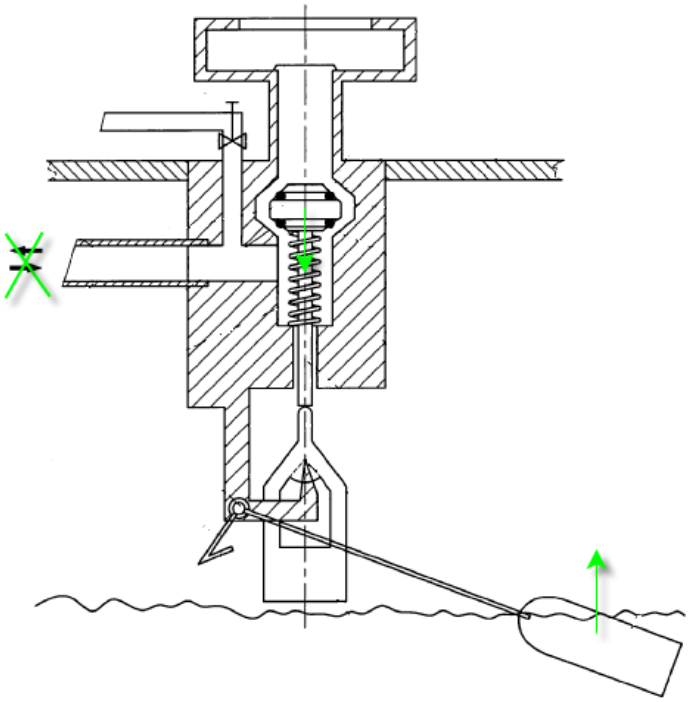

References

Informative references

Attention is drawn to the following places, which may be of interest for search:

Safety valves	F16K 17/00

Synonyms and Keywords

PRV	pressure relief valves
SV	Safety valves

In patent documents the following words "PRV", “SV” and "venting valve" are often used as synonyms.

F17C 2205/0335

Check-valves or non-return valves

Definition statement

This place covers:

Valves that prevents fluid flow in a certain direction.

In this positive example from US2004123735, the fluid can only flow out through the branch with the check-valve.

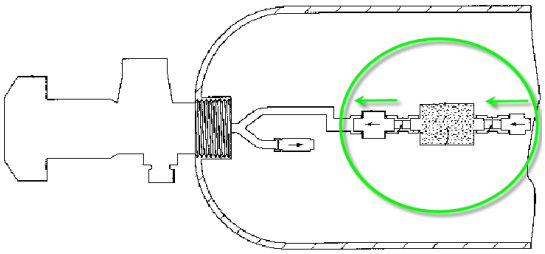

References

Informative references

Attention is drawn to the following places, which may be of interest for search:

Check valves	F16K 15/00

Synonyms and Keywords

NRV	Non-return valves

In patent documents the following words "NRV" and "back pressure valve" are often used as synonyms.

F17C 2205/0338

Pressure regulators

Definition statement

This place covers:

Regulators for pressure with a set point and means to stay at it.

In this positive example from WO0201306, a pressure regulator is mounted inside the vessel.

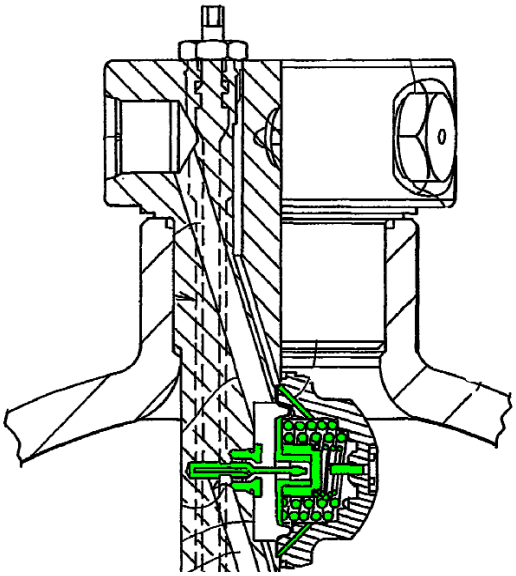

References

Informative references

Attention is drawn to the following places, which may be of interest for search:

Systems for controlling and regulating non-electrical variables	G05D

F17C 2205/0341

Filters

Definition statement

This place covers:

Filters for purifying the stored fluid.

In this positive example from US4111661, a filter is mounted inside the vessel.

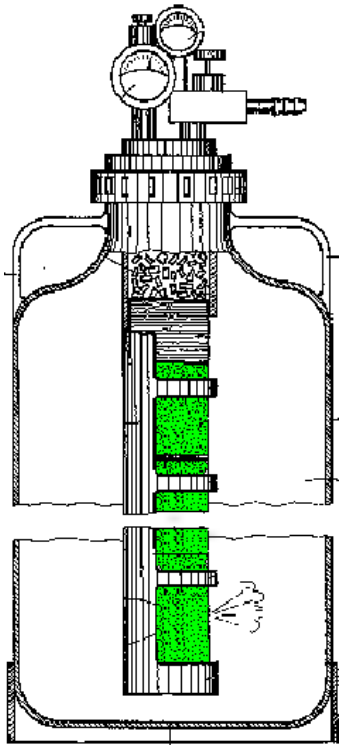

F17C 2205/0344

Sinter type

Definition statement

This place covers:

Filters of the sintered type, like sintered bronze, often used in applications requiring high temperatures resistance.

F17C 2205/0347

Active charcoal type

Definition statement

This place covers:

Filters of the active carbon type with extremely porous activated carbon for absorption or chemical reaction to enable high quality filtering.

F17C 2205/035

Flow reducers

Definition statement

This place covers:

Devices to reduce flow of the fluid, like restrictors or throttles.

In this positive example from US2005028536, flow is reduced.

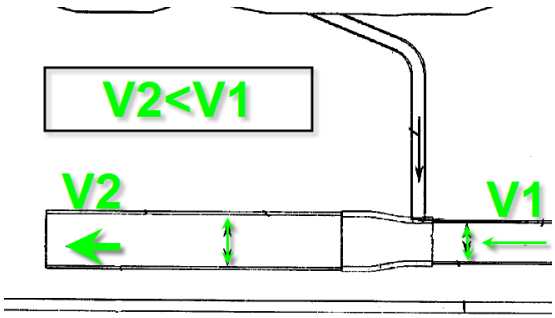

In this positive example from EP1445622, a capillary stem restricts the flow of hyperpolarized gas.

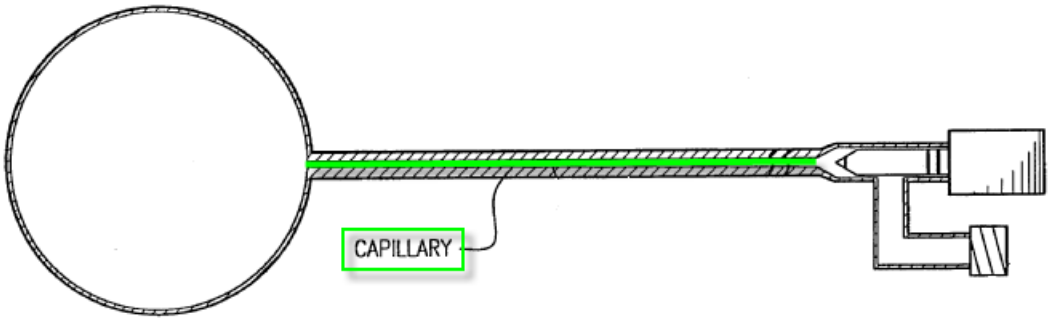

F17C 2205/0352

Pipes

Definition statement

This place covers:

Pipes for which details are available.

In this positive example from US2006254676, details of the pipes are visible, in particular the bending and the parts located in the vessel and at the pressure vessel inlet.

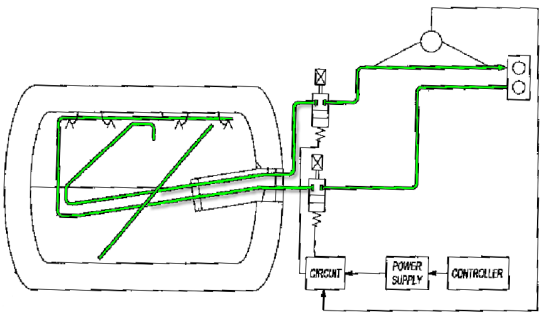

In this negative example from EP0908665, no details about the pipe are visible. In purely functional drawings, pipes are often represented symbolically as a line between two points, without any details.

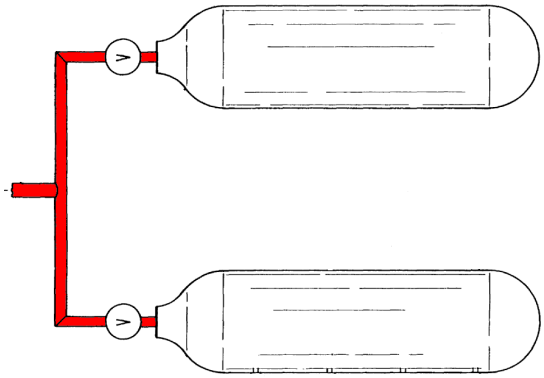

References

Informative references

Attention is drawn to the following places, which may be of interest for search:

Loading unloading fluids for ships	B63B 27/24
Pipes, joints or fitting for pipes	F16L

F17C 2205/0355

Insulation thereof

Definition statement

This place covers:

Pipes with a thermal insulation.

In this positive example from US2235424, the pipe is insulated.

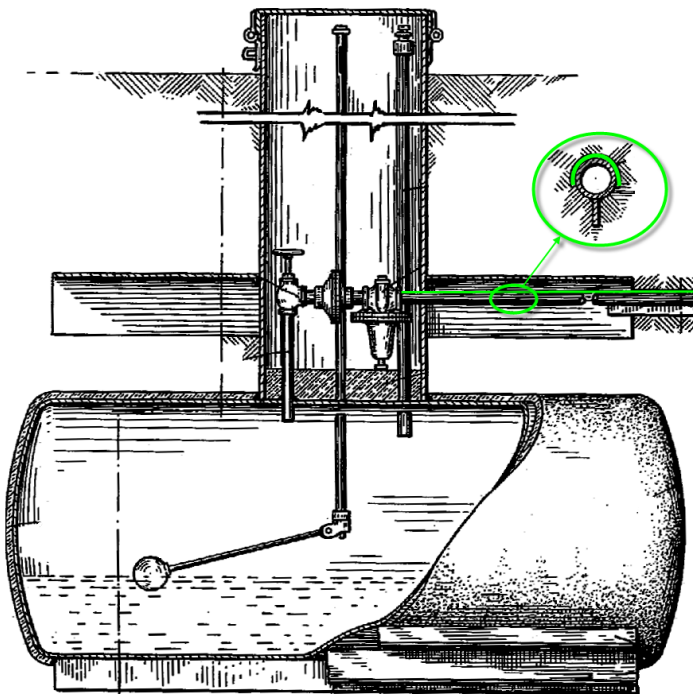

In this negative example from US2005211711, the pipes run through the vessel and insulate the fluid inside the vessel.

The convenient subclass is "Thermal insulation by liquid means (F17C 2203/037)".

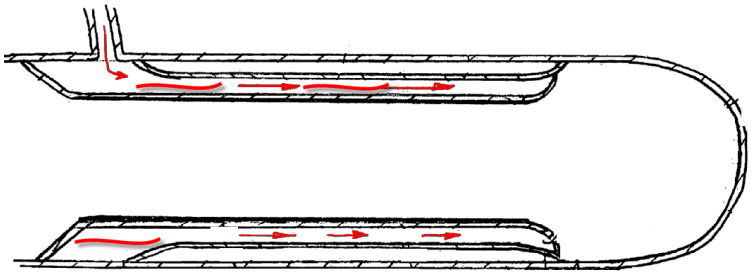

F17C 2205/0358

coaxial

Definition statement

This place covers:

Pipes mounted inside another one

In this positive example from US3355893, several coaxial pipes reach into an underground vessel.

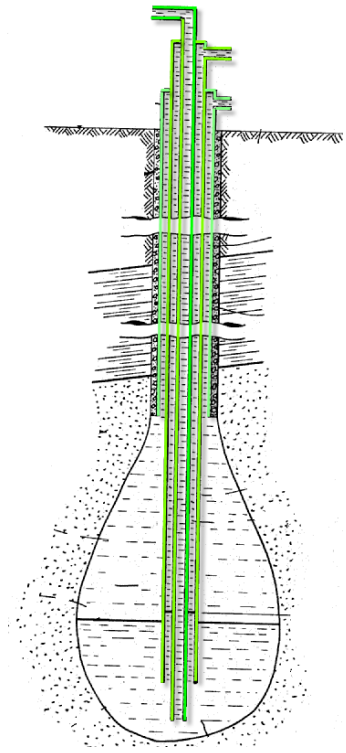

F17C 2205/0361

corrugated

Definition statement

This place covers:

Pipes with a ripped outer or inner surface.

In this positive example from US2007186925, a ripped pipe is directly mounted on the vessel.

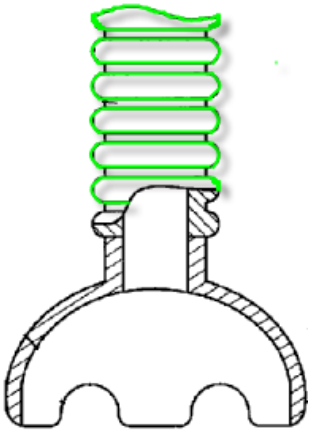

F17C 2205/0364

flexible or articulated, e.g. a hose

Definition statement

This place covers:

Pipes which, in use, can take several locations due to the flexibility of the material or due to articulations.

In this positive example from DE19910894, the pipe follows the fluid level in the vessel.

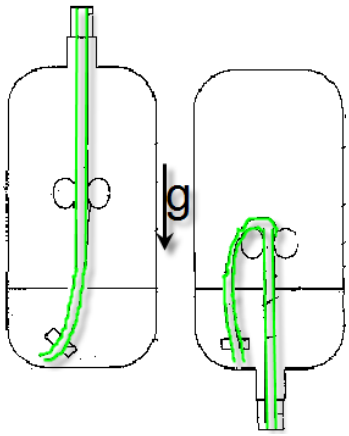

In this positive example from WO2005032942, the pipe adapts to the movement between ship and mooring buoy.

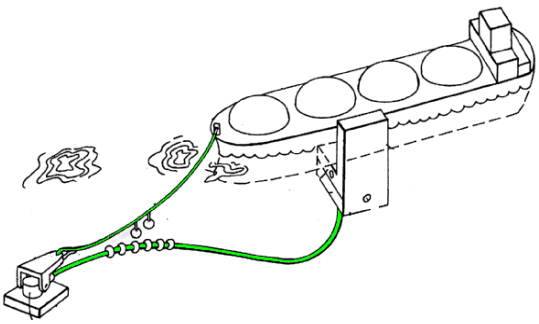

References

Informative references

Attention is drawn to the following places, which may be of interest for search:

Hose	F16L 11/00

F17C 2205/0367

Arrangements in parallel

Definition statement

This place covers:

Pipes functioning in parallel, one being an inflow (usually liquefied gas), the other a backflow line (usually gas).

In this positive example from EP0889274, a liquefied fluid pipe and a gas pipe run in parallel and are located in parallel.

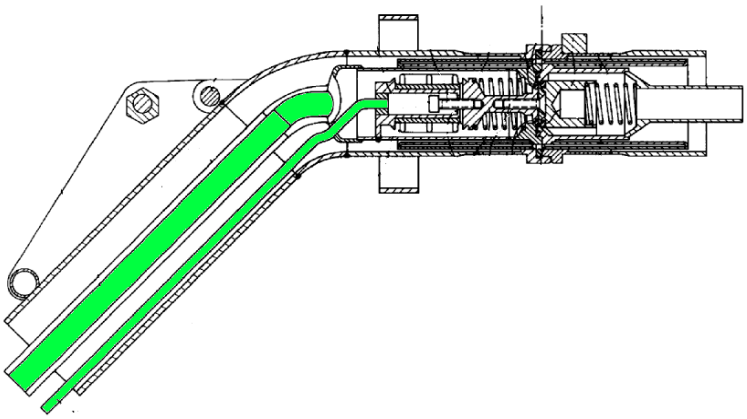

In this positive example from WO2006008299, a liquid hose and a vapor hose run in parallel.

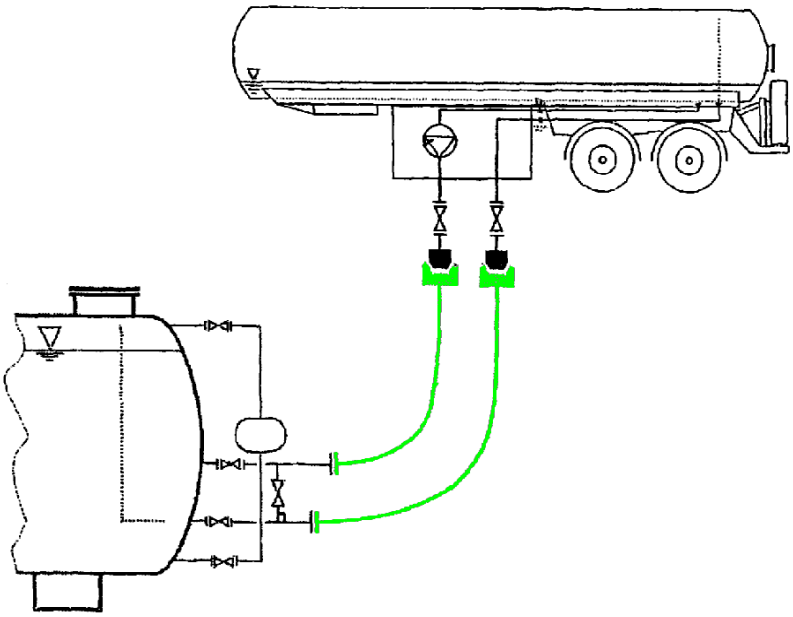

In this positive example from EP2236904, a LNG pipe and a gas pipe run in parallel.

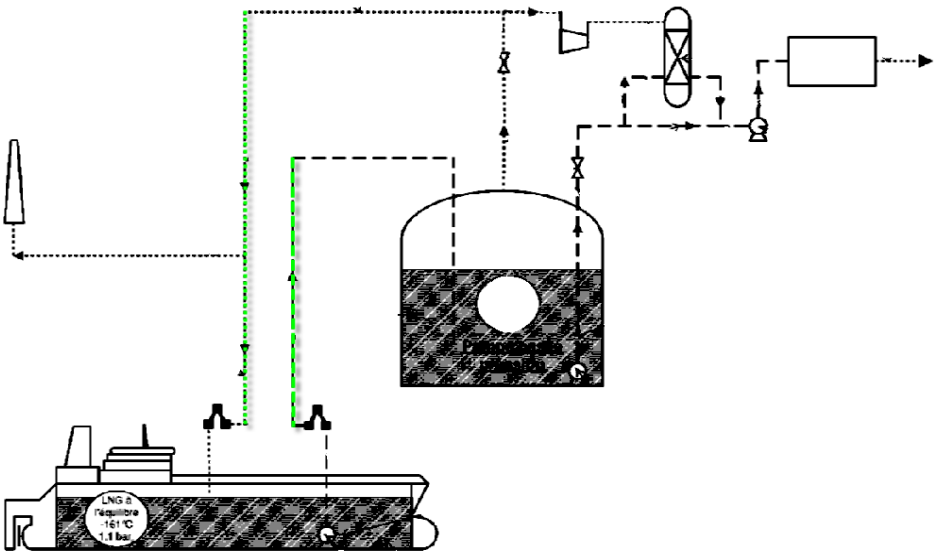

F17C 2205/037

Quick connecting means, e.g. couplings

Definition statement

This place covers:

Means to quickly connect two devices so as to transfer fluid.

In this positive example from DE29711842U, a coupling allows to branch to a pipe.

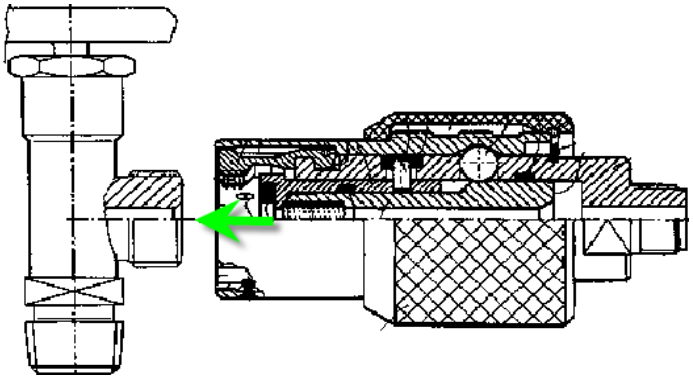

In this negative example from EP1099664, the coupling has the form of dispensing pistols.

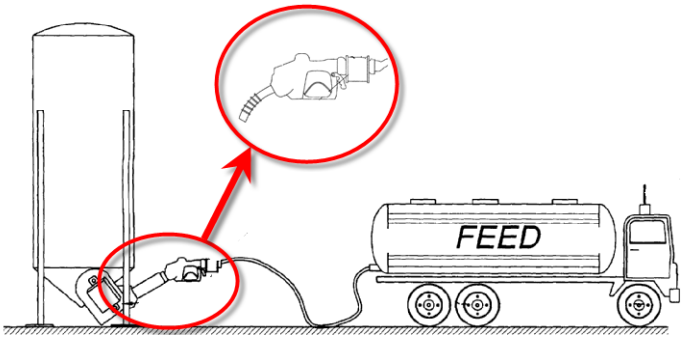

References

Informative references

Attention is drawn to the following places, which may be of interest for search:

Couplings of the quick-acting type	F16L 37/00

Special rules of classification

Quick connecting means in form of a dispensing coupling are classified with "Dispensing pistols" in F17C 2205/0376

F17C 2205/0373

Adapters

Definition statement

This place covers:

Adapter to be located between means to connect two coupling devices, these means being for example a quick coupling means or a dispensing pistol.

In this positive example from EP1099664, an adapter is mounted on a dispensing pistol.

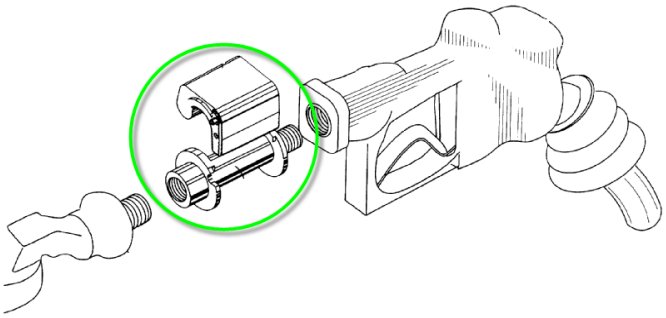

F17C 2205/0376

Dispensing pistols

Definition statement

This place covers:

Means to quickly connect two devices so as to transfer fluid, the means having the form of a pistol, with the typical pistol bend.

In this positive example from EP1669663, the dispensing pistol is for liquefied gas.

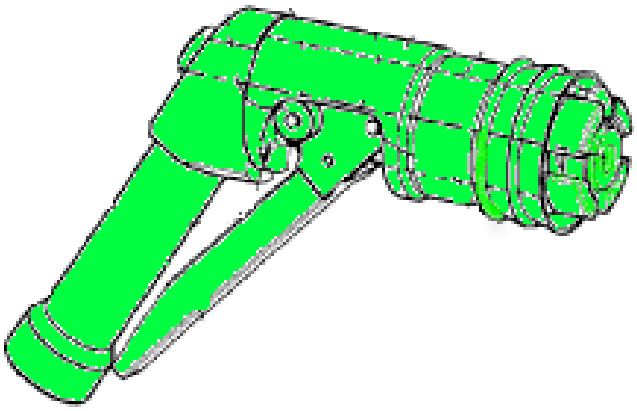

Special rules of classification

Quick connecting means in form of a dispensing coupling which have not the typical pistol bend are classified with "quick connecting means" in F17C 2205/037

F17C 2205/0379

Manholes or access openings for human beings

Definition statement

This place covers:

Pressure vessels comprising an access to the inner space for maintenance or inspection, no matter whether the access is dimensioned for a whole person or for a hand.

In this positive example from EP1522786, a manhole is situated on top of the vessel.

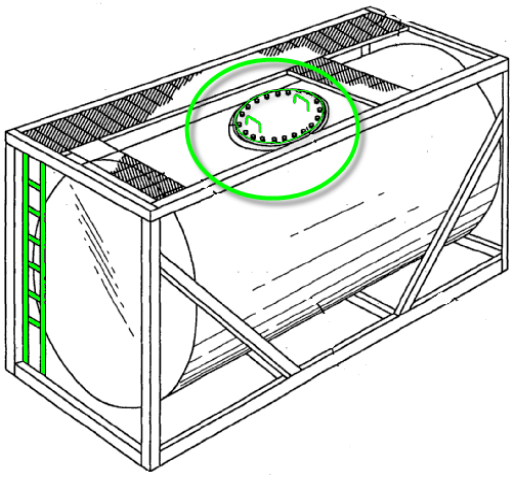

In this negative example from DE69723389T2, a manhole provides access to the protective concrete surrounding, not the vessel itself.

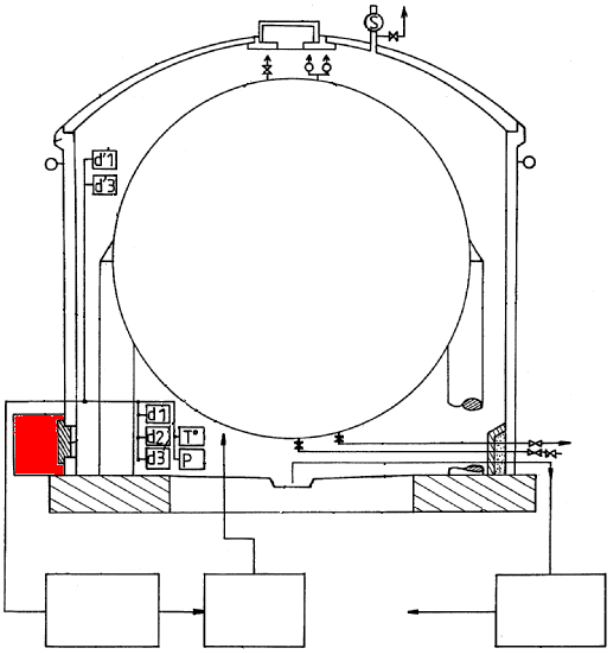

Special rules of classification

All vessels have an access to the inside. Those accesses that justify a classification herein should explicitly be designed for that purpose, e.g. maintenance or inspection should be mentioned in the text, or a ladder should be placed next to the access.

F17C 2205/0382

Constructional details of valves, regulators

Definition statement

This place covers:

Valves or regulators for which details of the internal mechanisms are visible, which are thus not represented as functional drawings, but rather as workshop drawings or cut views.

In this positive example from FR847127, the valve seat, the spring, and a solenoid are visible.

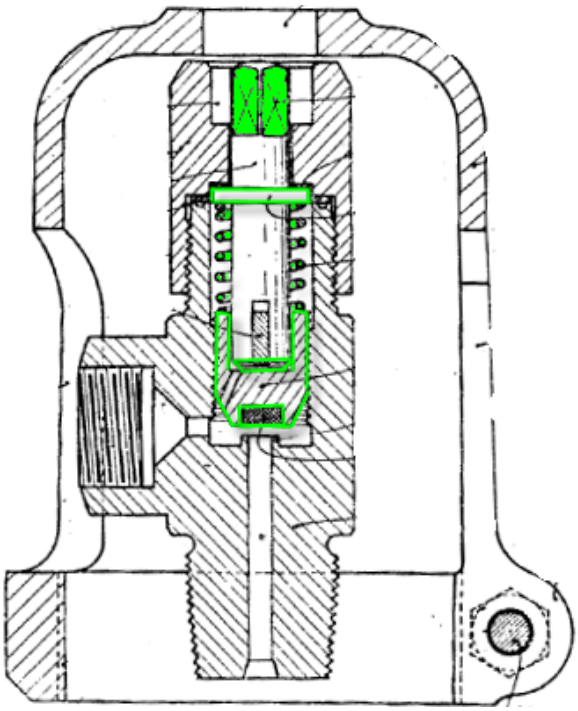

In this negative example from US2003010395, valves are only represented as symbol.

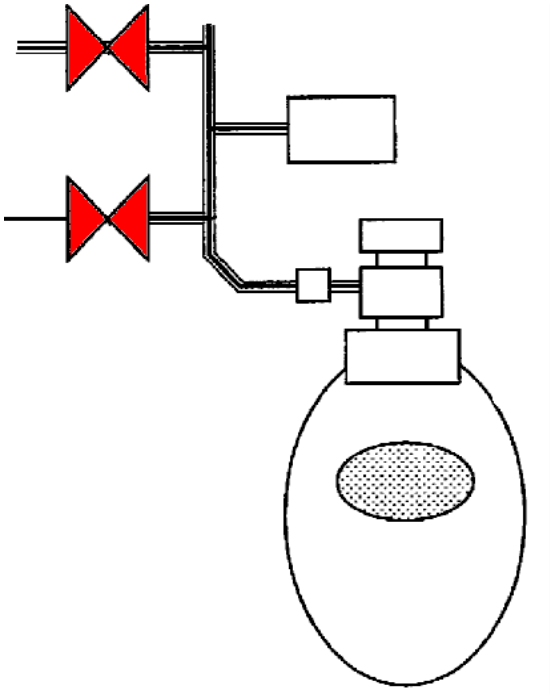

F17C 2205/0385

in blocks or units

Definition statement

This place covers:

Compact unit comprising several valves or regulators mounted en bloc.

In this positive example from FR2798450, one single body holds 5 types or valves.

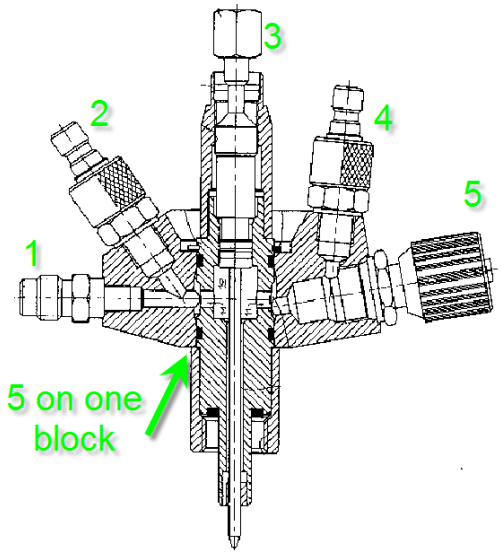

In this negative example from EP1726869, a sequence of valves seems mounted close to the vessel, but there is no single unit.

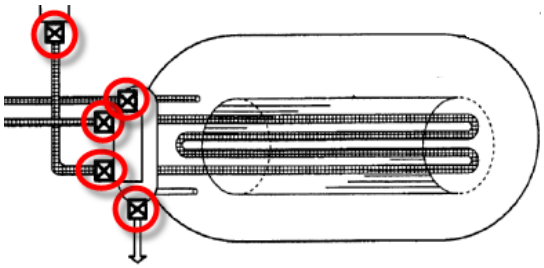

References

Informative references

Attention is drawn to the following places, which may be of interest for search:

Construction of housing formed from a plurality of the same valve elements	F16K 27/003

F17C 2205/0388

Arrangement of valves, regulators, filters

Definition statement

This place covers:

Localisation of valves, regulators or filters in the gas storage or handling process.

F17C 2205/0391

inside the pressure vessel

Definition statement

This place covers:

Localisation of valves, regulators or filters at least partially inside the pressure vessel.

In this positive example from US5197710, the insertion of the valve is partial.

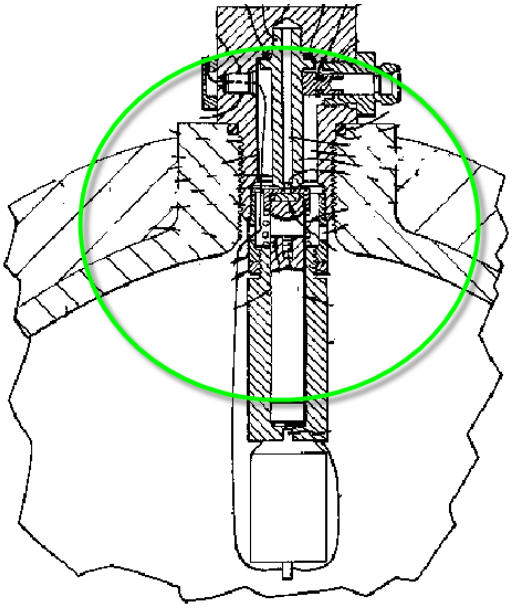

In this positive example from WO0181822, the pressure regulator is mounted entirely inside the vessel

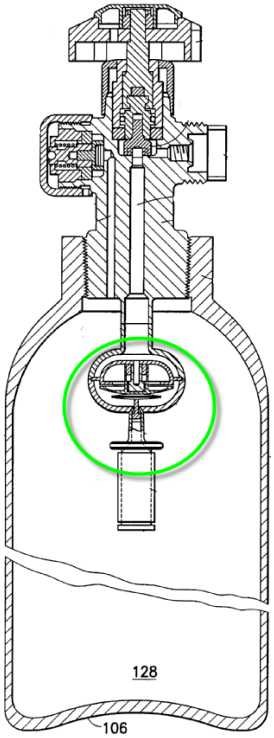

F17C 2205/0394

in direct contact with the pressure vessel

Definition statement

This place covers:

Localisation of valves, regulators or filters on or in direct contact with the pressure vessel.

In this positive example from BE471532, the valve is mounted on the vessel.

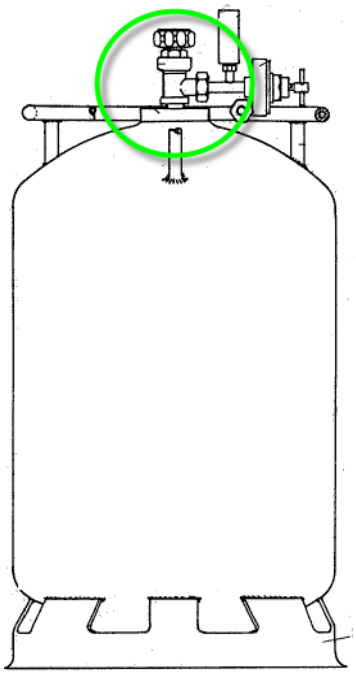

In this negative example from DE10058496, the valves marked in red are placed on the pipe, only one valve directly mounted on the pressure vessel could be classified here.

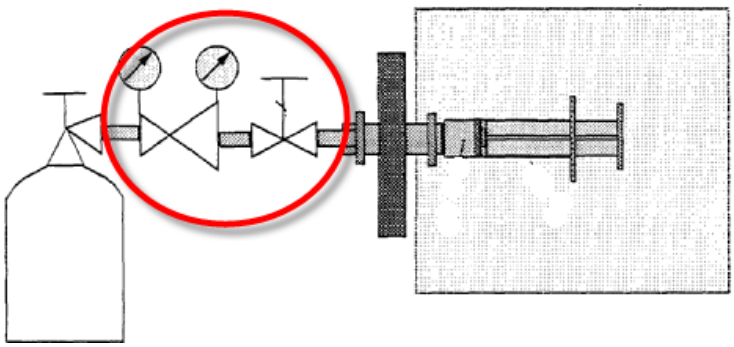

F17C 2205/0397

on both sides of the pressure vessel

Definition statement

This place covers:

Localisation of valves, regulators on two opposed or distant sides of the pressure vessel.

In this positive example from EP0753700, two openings are situated at opposite locations on the vessel.

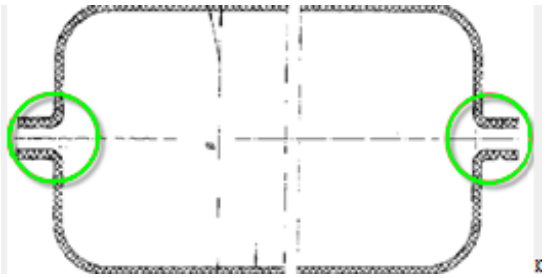

In this positive example from DE19937470, openings are situated at opposite locations on the vessel and on the middle part

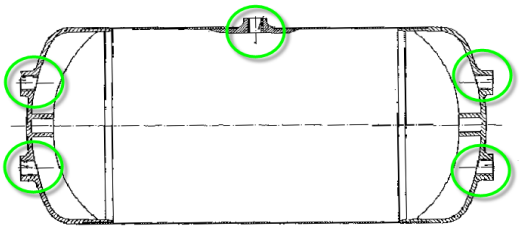

In this negative example from FR2067600, the main opening is flanked by two secondary openings.

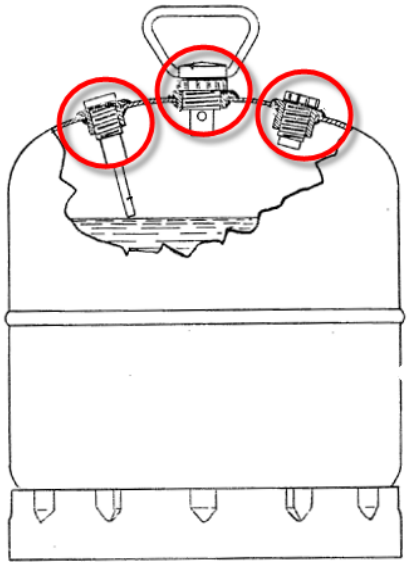

Special rules of classification

The presence of appropriate openings, within the explicit presence of valves or regulators, is sufficient to allow a classification here.

An opening which is not on an opposed or at least distant localisation on the vessel is not classified herein.

F17C 2205/05

Vessel or content identifications, e.g. labels

Definition statement

This place covers:

Devices carrying information about the content of the vessel or the vessel itself.

In this positive example from FR2849606, a maintenance report is attached to vessel.

References

Informative references

Attention is drawn to the following places, which may be of interest for search:

Labeling or tagging machines, apparatus, or processes	B65C
Logistics for storage, shipping, distribution, loading	G06Q 10/08
Inventory or stock management	G06Q 10/087

F17C 2205/051

by coating

Definition statement

This place covers:

Devices using coating to carry the information.

In this positive example from US2007164040, the gas type is marked on the vessel.

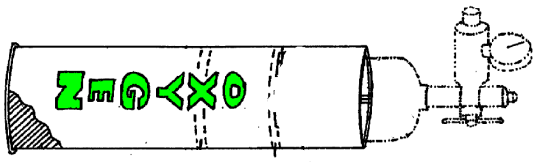

Special rules of classification

Coating which has not role in carrying information like e.g. coating that serves for protection against mechanical impact, is not classified here, but only under F17C 2203/0607

F17C 2205/052

by stickers

Definition statement

This place covers:

Devices using a sticker to carry the information.

In this positive example from WO8504380, a label is placed between two layers.

F17C 2205/054

by bar codes

Definition statement

This place covers:

Devices using bar codes to carry the information.

In this positive example from EP0515184, a bar code is attached to the valve.

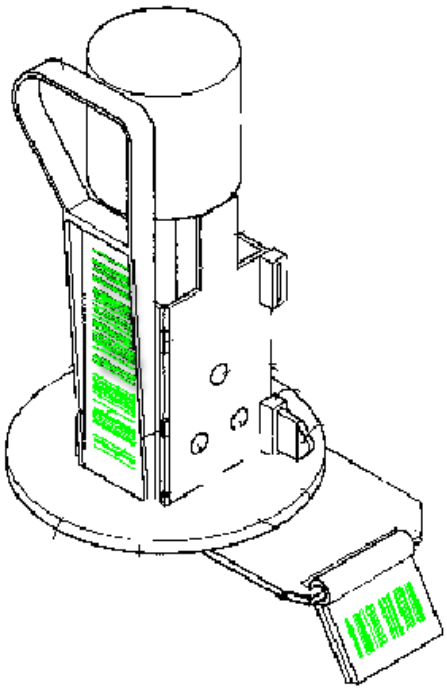

F17C 2205/055

by magnetic means

Definition statement

This place covers:

Devices using magnetic means to carry the information.

In this positive example from WO2007042879, an electromagnetic tag is attached at the neck of the vessel.

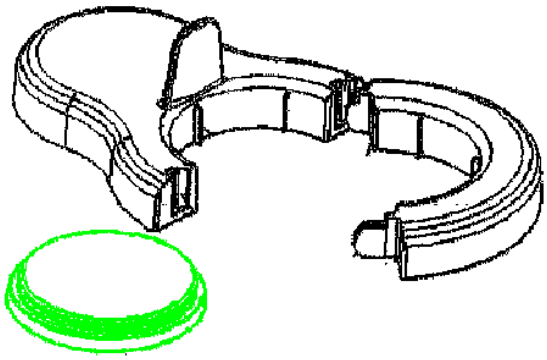

F17C 2205/057

by chips

Definition statement

This place covers:

Devices using electronic chips to carry the information.

In this positive example from FR2868186, information carried on chips can be transmitted.

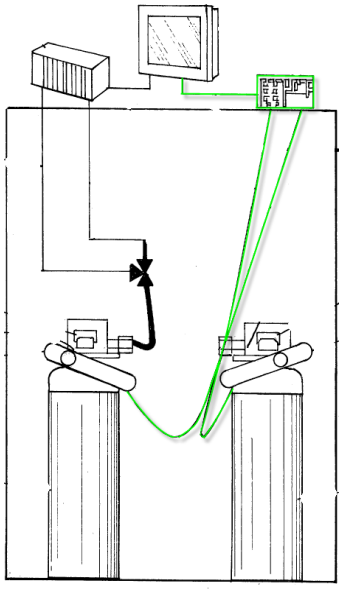

F17C 2205/058

by Radio Frequency Identification

Definition statement

This place covers:

Devices using RFID to carry the information.

In this positive example from EP1988327, RFID allows transmitting information over longer distances.

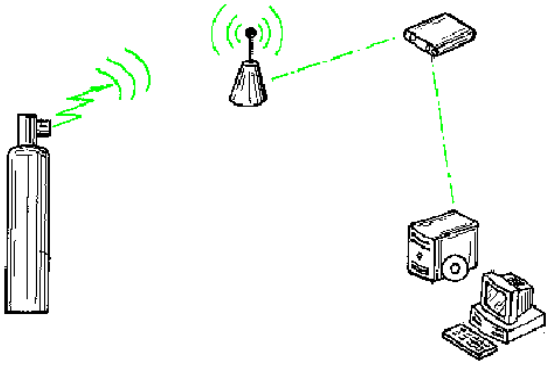

F17C 2209/00

Vessel construction, in particular methods of manufacturing

Definition statement

This place covers:

Manufacturing steps or manufacturing method for pressure vessels.

In this positive example from WO03031860, several manufacturing steps of a cylindrical vessel are illustrated.

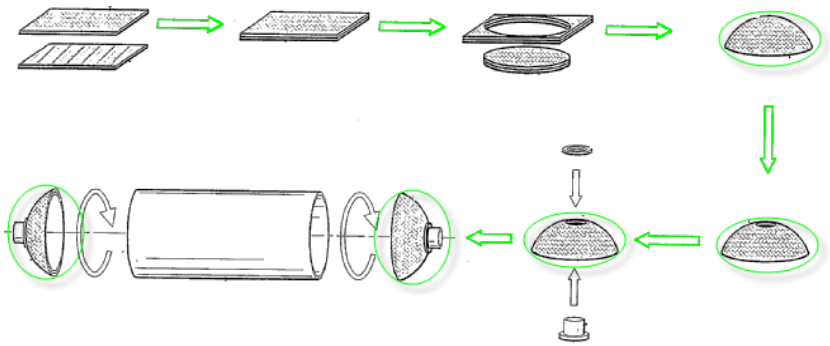

In this negative example from GB2096299, round corners appear, but are not sufficient to deduct any manufacturing method like moulding.

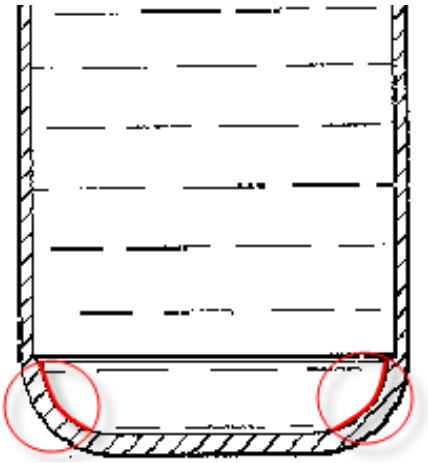

References

Informative references

Attention is drawn to the following places, which may be of interest for search:

Processing sheet of metal or metal tubes or rods without removing material	B21D
Processing metal and making hollow objects	B21D 51/00
Turning, boring	B23B
Polishing	B24B
Shaping or joining of plastics	B29C
Presses	B30B
Non mechanical removal of metallic material from surface, inhibiting corrosion of metallic material	C23F

Special rules of classification

Ideally, manufacturing steps or methods are explicitly disclosed. Alternatively the vessel must be described in a way indicating how it has been manufactured e.g. "blow-moulded vessel".

F17C 2209/21

Shaping processes

Definition statement

This place covers:

Manufacturing steps or manufacturing method for pressure vessels during which material is put into a certain shape.

F17C 2209/2109

Moulding

Definition statement

This place covers:

Manufacturing steps or manufacturing method for pressure vessels comprising moulding, e.g. applied to plastics or metal.

F17C 2209/2118

by injection

Definition statement

This place covers:

Manufacturing steps or manufacturing method for pressure vessels comprising injection moulding, during which heated material is forced into a mould cavity where it cools and hardens.

F17C 2209/2127

by blowing

Definition statement

This place covers:

Pressure vessel for which blow moulding is disclosed as manufacturing step, usually to form hollow elements, consisting in forcing heated material into a mould cavity where it cools to form hollow parts.

References

Informative references

Attention is drawn to the following places, which may be of interest for search:

Blow moulding of plastics	B29C 49/00

Synonyms and Keywords

In patent documents, the following words/expressions are often used as synonyms:

- "Extrusion blow moulding", "injection blow moulding", and "stretch blow moulding"

F17C 2209/2136

using wax moulds

Definition statement

This place covers:

Manufacturing steps or manufacturing method for pressure vessels using wax moulds, which are lost after the process.

Synonyms and Keywords

In patent documents, the following words/expressions are often used as synonyms:

- In the patent documents the following words "die cast" and "wax moulding" are often as used as synonyms.

F17C 2209/2145

by rotation

Definition statement

This place covers:

Manufacturing steps or manufacturing method for pressure vessels comprising rotation moulding, causing the material to disperse and stick to the mould walls.

Synonyms and Keywords

In patent documents, the following words/expressions are often used as synonyms:

- "roto casting" and "spin casting"

F17C 2209/2154

Winding

Definition statement

This place covers:

Manufacturing steps or manufacturing method for pressure vessels comprising winding

In this positive example from US5202165, details of the winding step are visible.

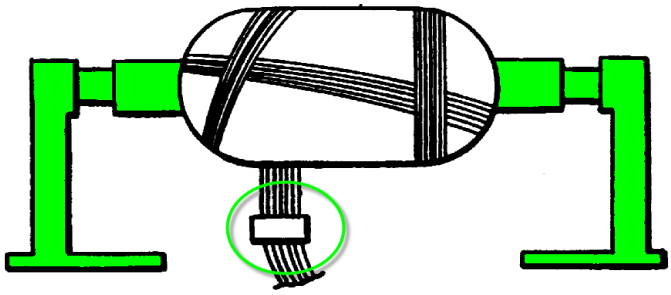

In this negative example from US2011210131, a wound pressure vessel is disclosed without details of the manufacturing process.

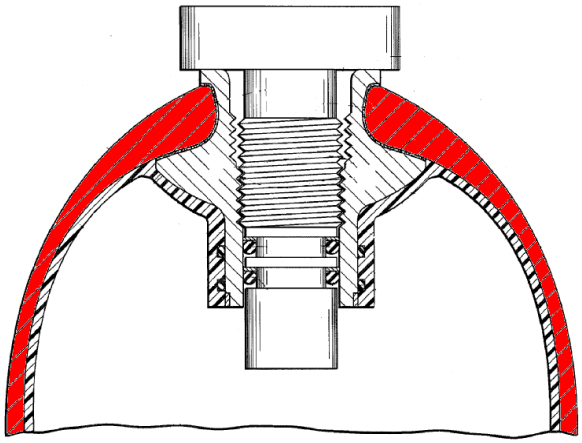

References

Informative references

Attention is drawn to the following places, which may be of interest for search:

Winding	B29C 53/56, B29C 53/785
Shaping composites	B29C 70/00

Special rules of classification

The term "wound" or "winding" is per se not sufficient to materialize a manufacturing step. A wound pressure vessel is classified under

F17C 2203/0663. Manufacturing steps or a manufacturing method details how the pressure vessel is wound is required to classify herein.

F17C 2209/2163

with a mandrel

Definition statement

This place covers:

Manufacturing steps or manufacturing method for pressure vessels comprising winding with a mandrel, which is removed after the process.

In this positive example from US6189723, the removable mandrel is visible.

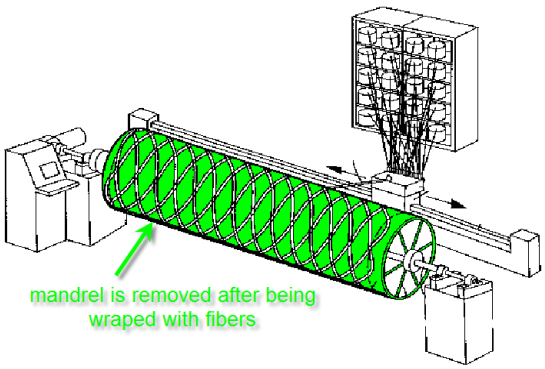

In this negative example from FR2575966, the winding takes place around a liner, which is not removed afterwards.

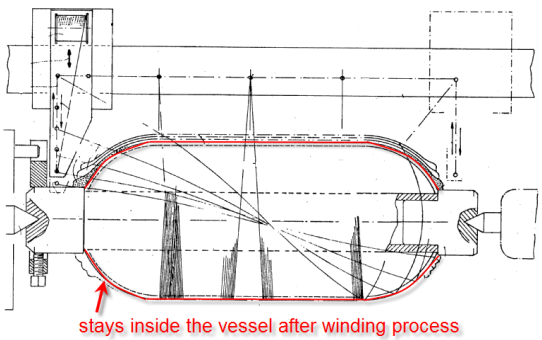

F17C 2209/2172

Polishing

Definition statement

This place covers:

Manufacturing steps or manufacturing method for pressure vessels comprising a form of polishing, e.g. by sand blasting.

F17C 2209/2181

Metal working processes, e.g. deep drawing, stamping or cutting

Definition statement

This place covers:

Manufacturing steps or manufacturing method for pressure vessels comprising a metal working process, like deep drawing, stamping or cutting.

In this positive example from US4023696, a punch forms metal into a vessel.

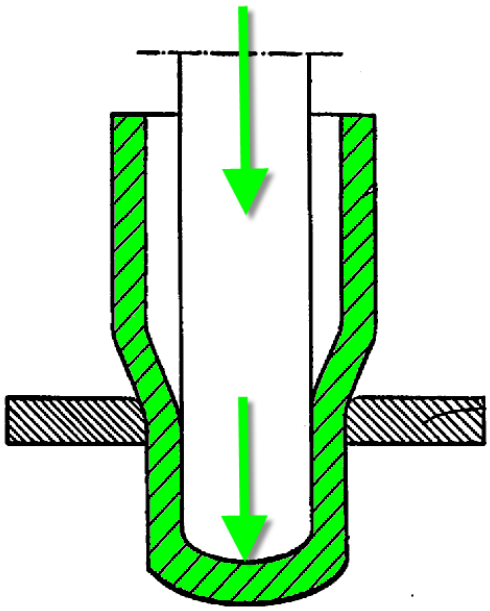

References

Informative references

Attention is drawn to the following places, which may be of interest for search:

Making hollow objects for high pressure containers	B21D 51/24

F17C 2209/219

Working processes for non metal materials, e.g. extruding

Definition statement

This place covers:

Manufacturing steps or manufacturing method for pressure vessels comprising a non-metal working process, like extruding.

In this positive example from WO0236333, a polymeric vessel is formed by extruding.

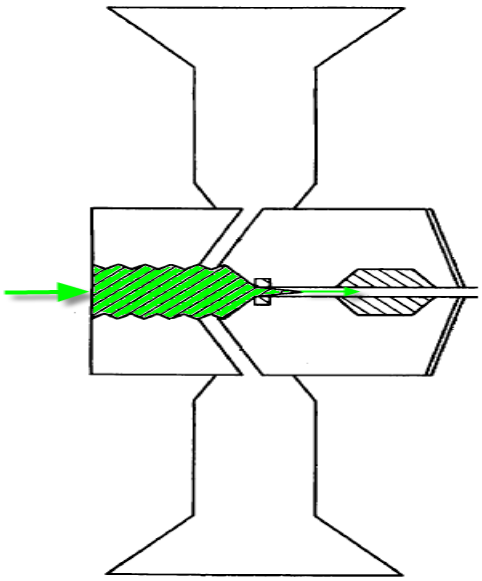

References

Informative references

Attention is drawn to the following places, which may be of interest for search:

Shaping or joining of plastics	B29C

F17C 2209/22

Assembling processes

Definition statement

This place covers:

Manufacturing steps or manufacturing method for pressure vessels during which material parts are assembled to complete the vessel.

Special rules of classification

Unless particularly interesting and exceptional assembling steps are detailed, the mounting of valves on the vessel should not be classified herein.

F17C 2209/221

Welding

Definition statement

This place covers:

Manufacturing steps or manufacturing method for pressure vessels during which material parts are assembled by welding

In this positive example from WO8900658 weld spots are visible in a drawing.

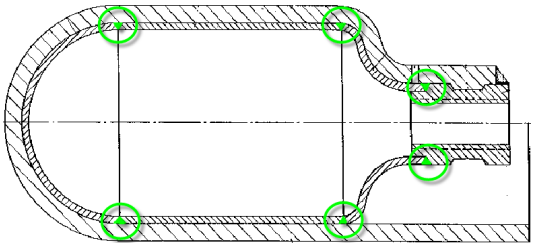

References

Informative references

Attention is drawn to the following places, which may be of interest for search:

Soldering, welding	B23K

Special rules of classification

As there is no other classification entry related to welding, an explicit welding manufacturing step is not necessary, so that the term "welded" or the presence of welding spots on drawings are sufficient for classification in this group.

F17C 2209/222

by friction

Definition statement

This place covers:

Manufacturing steps or manufacturing method for pressure vessels during which material parts are assembled by friction welding.

In this positive example from WO2004096459, several parts are assembled by friction welding at the same time.

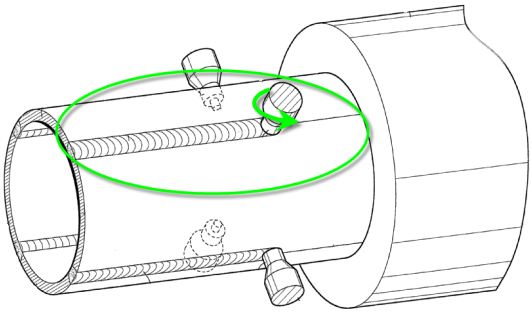

F17C 2209/224

Press-fitting; Shrink-fitting

Definition statement

This place covers:

Manufacturing steps or manufacturing method for pressure vessels during which material parts are assembled by press- or shrink-fitting.

In this positive example DE8619754U, fitted parts of the middle part are slightly conical.

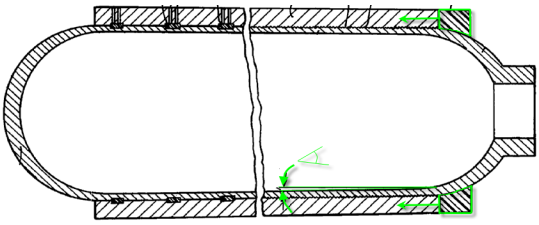

F17C 2209/225

Spraying

Definition statement

This place covers:

Manufacturing steps or manufacturing method for pressure vessels during which material parts are sprayed.

In this positive example from US2004089440, glue is sprayed.

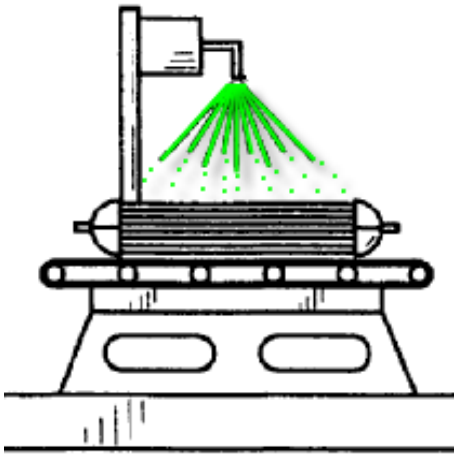

F17C 2209/227

by adhesive means

Definition statement

This place covers:

Manufacturing steps or manufacturing method for pressure vessels during which material parts are assembled by adhesive means like glue.

In this positive example from WO02088593, layers are glued together.

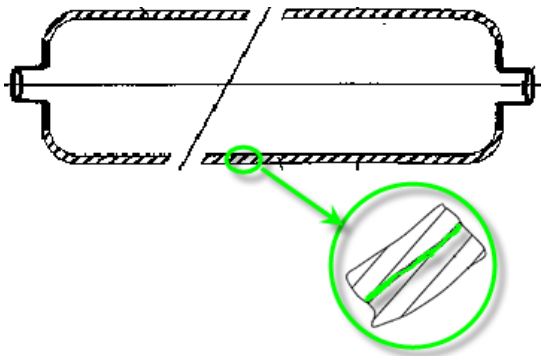

In this negative example from WO0148418, fibers in a layer are adhered by a matrix material, but this is not considered an assembling step.

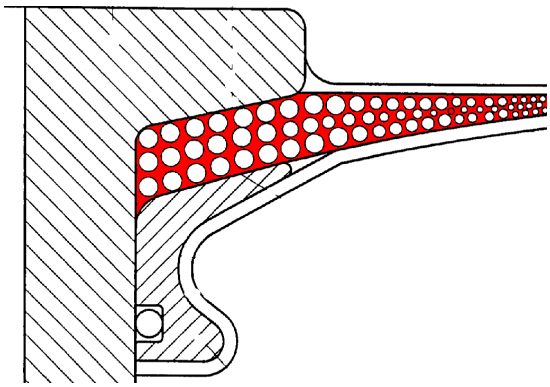

F17C 2209/228

by screws, bolts or rivets

Definition statement

This place covers:

Manufacturing steps or manufacturing method for pressure vessels during which material parts are assembled by screws or bolts or rivets.

In this positive example from DE671013, a screw holds parts of the vessel together.

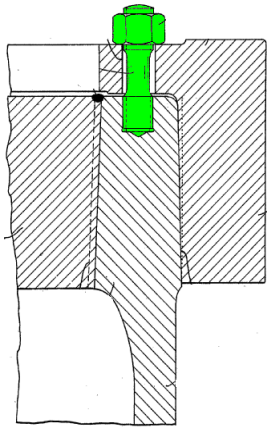

In this negative example from US2372800, two parts of a vessel are screwed together. This example is classified in "assembling processes"

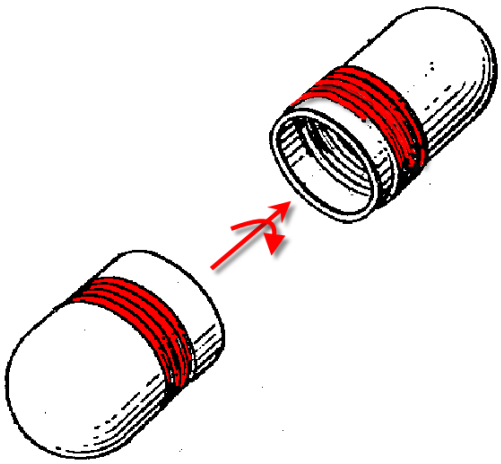

F17C 2209/23

Manufacturing of particular parts or at special locations

Definition statement

This place covers:

Particular details or locations in relation with manufacturing steps or manufacturing method for pressure vessels.

Special rules of classification

Any details related to a way of assembling walls or layers, like the presence of welding spots, the placing of an O-ring or a way to fold metal in the contact zone, are classified herein.

A manufacturing process step does not need to be explicitly mentioned, in most cases, a drawing with a detail is sufficient.

F17C 2209/232

of walls

Definition statement

This place covers:

Details in relation with the assembling of walls or layers.

In this positive example from WO9220954, a layer is assembled with a certain angle.

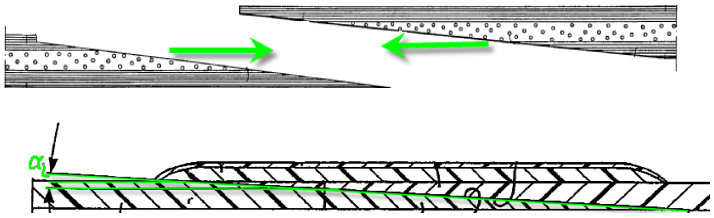

In this positive example from EP0166492, the layer has a honeycomb structure.

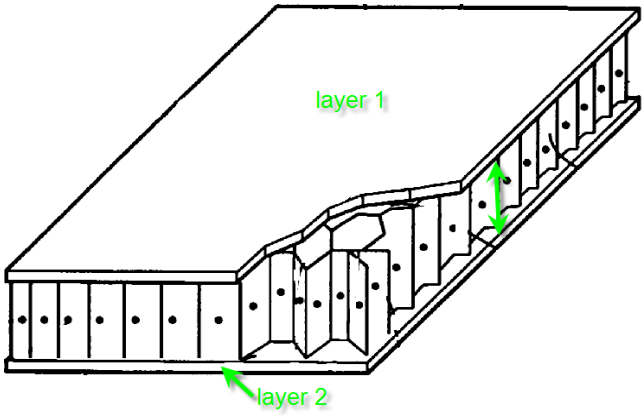

In this positive example from WO2010112715, layers are maintained by an H-profiled element.

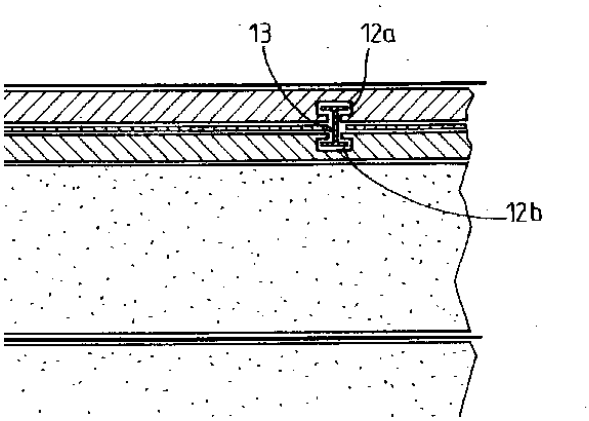

F17C 2209/234

of closing end pieces, e.g. caps

Definition statement

This place covers:

Details in relation with the assembling of end pieces.

In this positive example from WO03031860, the mounting steps of closing end pieces is illustrated.

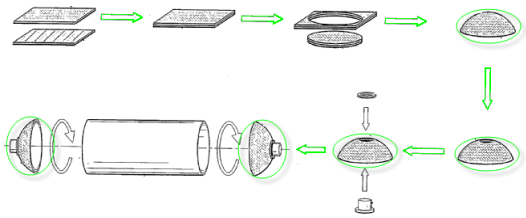

In this positive example from US2011253727, the form of the edge of the end piece is detailed.

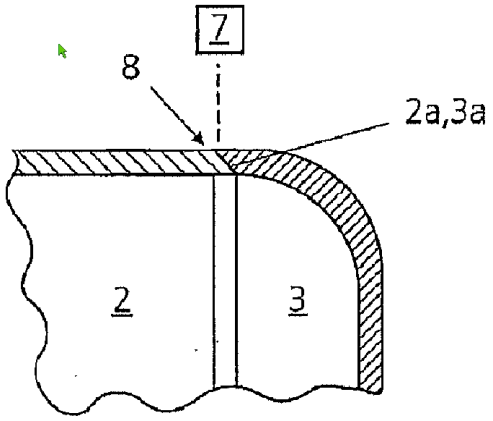

F17C 2209/236

Apparatus therefore

Definition statement

This place covers:

Apparatus related to the assembling of end pieces and to the inserting of valves.

In this positive example from EP0780191, the focus is on the mounting apparatus, not on the vessel.

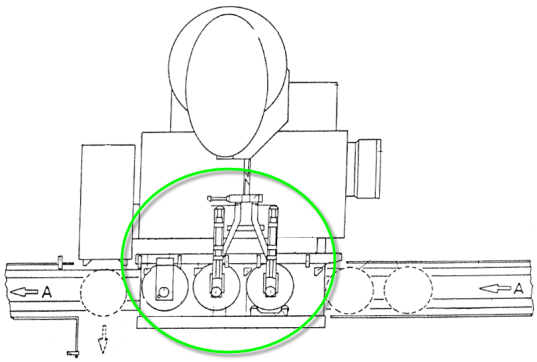

References

Informative references

Attention is drawn to the following places, which may be of interest for search:

Applying closure members to bottles, jars, containers	B67B

F17C 2209/238

Filling of insulants

Definition statement

This place covers:

Details in relation with the filling of insulant into a wall, e.g. insertion and compression of perlite.

In this positive example from WO2010039198, Aerogel is added to an insulating layer.

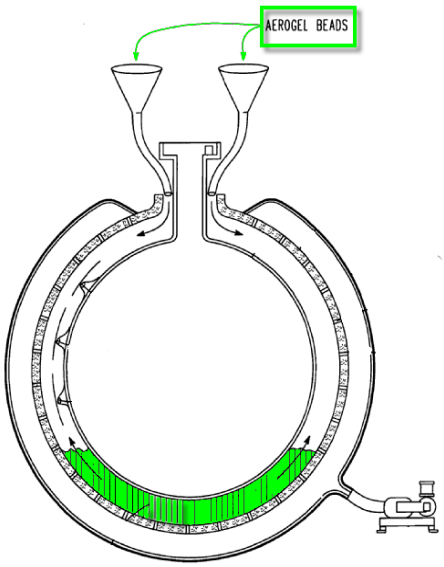

F17C 2221/00

Handled fluid, in particular type of fluid

Definition statement

This place covers:

Fluid stored in the pressure vessel or handled during charging or discharging into or from a pressure vessel.

In this positive example from WO2010039198, the fluid stored in the tank is hydrogen.

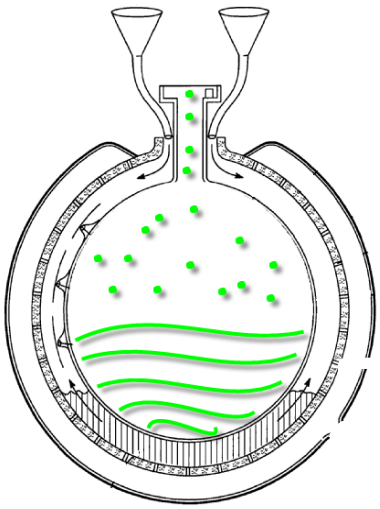

Special rules of classification

Fluids not being the primary fluid to be stored in the tank, e.g. fluids for insulation layers, are not classified herein.

Mixtures of different fluids are classified in all relevant classes into which each fluid composing the mixture would be classified, and additionally into the class "Mixtures", e.g. a mixture of He and O2 are classified in the classes related to Helium , Oxygen, and "Mixtures".

F17C 2221/01

Pure fluids

Definition statement

This place covers:

Fluid represented by a single sort of molecules, or mixture containing at least one fluid represented by a single sort of molecules.

F17C 2221/011

Oxygen

Definition statement

This place covers:

Fluid comprising oxygen (O_2).

F17C 2221/012

Hydrogen

Definition statement

This place covers:

Fluid comprising hydrogen (H_2).

References

Informative references

Attention is drawn to the following places, which may be of interest for search:

Hydrogen; Gaseous mixtures containing hydrogen	C01B 3/00

F17C 2221/013

Carbone dioxide

Definition statement

This place covers:

Fluid comprising carbon dioxide (CO_2).

References

Informative references

Attention is drawn to the following places, which may be of interest for search:

CO_2 capture or storage with Subterranean or submarine CO_2 storage	Y02C 10/14

F17C 2221/014

Nitrogen

Definition statement

This place covers:

Fluid comprising nitrogen (N_2).

F17C 2221/015

Carbon monoxide

Definition statement

This place covers:

Fluid comprising carbon monoxide (CO).

F17C 2221/016

Noble gases (Ar, Kr, Xe)

Definition statement

This place covers:

Fluid comprising mono-atomic fluids with very low chemical reactivity, like), neon (Ne), argon (Ar), krypton (Kr), xenon (Xe) or radon (Rn).

F17C 2221/017

Helium

Definition statement

This place covers:

Fluid comprising Helium (He).

F17C 2221/018

Acetylene

Definition statement

This place covers:

Fluid comprising acethylene (C_2H_2).

F17C 2221/03

Mixtures

Definition statement

This place covers:

Fluid represented by a mixture of molecules or mixture containing at least one fluid represented by a mixture of molecules.

F17C 2221/031

Air

Definition statement

This place covers:

Fluid comprising air (4/5 nitrogen, 1/5 oxygen, argon and traces of carbon dioxide).

Special rules of classification

The constituents of air, like oxygen or nitrogen are not additionally classified in the relevant classes

F17C 2221/032

Hydrocarbons

Definition statement

This place covers:

Hydrocarbon, composition of carbon and hydrogen atoms, of the type CmHn.

F17C 2221/033

Methane, e.g. natural gas, CNG, LNG, GNL, GNC, PLNG

Definition statement

This place covers:

Hydrocarbon entirely or essentially made of methane CH_4, but generally comprising also ethane and higher hydrocarbons.

References

Informative references

Attention is drawn to the following places, which may be of interest for search:

Capture or disposal of methane	Y02C 20/20
Technologies for the production of fuel of non-fossil origin	Y02E 50/00

Special rules of classification

Natural gas is generally rather defined by its heat value than by its composition.

Synonyms and Keywords

In patent documents, the following abbreviations are often used:

CNG	Compressed Natural Gas
LNG	Liquefied Natural Gas
GNC	Gaz Naturel Comprimé
GNL	Gaz Naturel Liquéfié
PLNG	Pressurized Liquefied Natural Gas

F17C 2221/035

Propane butane, e.g. LPG, GPL

Definition statement

This place covers:

Hydrocarbon entirely or essentially made of propane C_3H_8 or butane C_4H_{10}, but generally comprising also some higher or lower hydrocarbons.

Synonyms and Keywords

In patent documents, the following abbreviations are often used:

LPG	Liquefied Petroleum Gas
GPL	Gaz Pétrole Liquéfié

F17C 2221/036

Hydrates

Definition statement

This place covers:

Fluid comprising hydrates, a mixture of hydrocarbon and water.

F17C 2221/037

Containing polluant, e.g. H_2S, Cl

Definition statement

This place covers:

Fluid comprising toxic or pollutant substances, like chlorine.

F17C 2221/038

Refrigerants

Definition statement

This place covers:

Fluid stored or transferred is a refrigerant.

In this positive example from EP1333223, Chlorodifluoromethane or ,1,1,2-Tetrafluoroethane is stored in the tank.

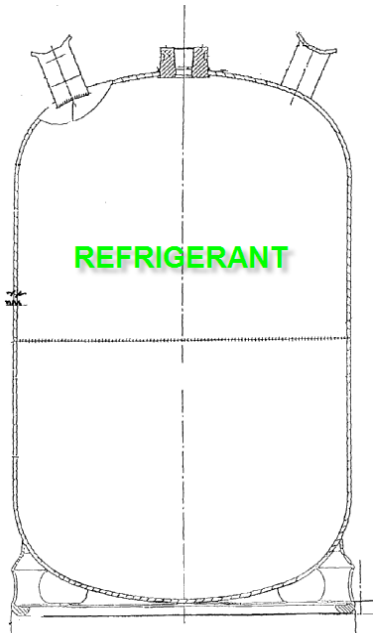

In this negative example from US2003159800, the refrigerant is not the fluid stored in the vessel, but in an attached refrigerating system.

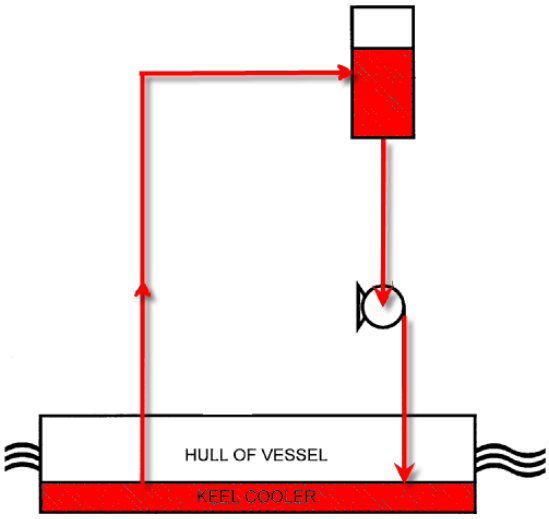

F17C 2221/05

Ultrapure fluid

Definition statement

This place covers:

Fluid cleaned of bacteria, particles. organic and inorganic substances, often used in the semiconductor manufacturing process.

F17C 2221/07

Hyperpolarised gases

Definition statement

This place covers:

Gas in an hyperpolarized state (ionised, having a negative potential).

F17C 2221/08

Ergols, e.g. hydrazine

Definition statement

This place covers:

Combustion fluid or propellant for rockets or space vehicles, e.g.N_2H_4.

F17C 2223/00

Handled fluid before transfer, i.e. state of fluid when stored in the vessel or before transfer from the vessel

Definition statement

This place covers:

Particular characteristics of the fluid stored in the pressure vessel or before transfer into the pressure vessel.

Special rules of classification

If a network of pressure vessels, the fluid in each pressure vessel and the transfer into each pressure vessel have to be considered separately and eventually classified.

E.g.: if a vessel 1 is emptied into a vessel 2, vessel 1 may be considered for classification into F17C 2223/00 and its sub-groups, and vessel 2 has to be considered for classification into F17C 2225/00 and its sub-groups. Finally, actual classification should only take place if "interesting", specific or unconventional transfer processes are disclosed.

F17C 2223/01

characterised by the phase

Definition statement

This place covers:

Phase of the fluid stored in the pressure vessel or before transfer from the pressure vessel.

F17C 2223/0107

Single phase

Definition statement

This place covers:

Fluid stored in the pressure vessel or before transfer from the pressure vessel is in a single phase.

F17C 2223/0115

dense or supercritical, i.e. at high pressure and high density

Definition statement

This place covers:

The single phase of the fluid stored in the pressure vessel or before transfer from the pressure vessel is dense or supercritical, i.e. at a temperature or pressure above the critical point, where no distinction between liquid or gas exists.

In this positive example from US2003115889, natural gas is in dense phase.

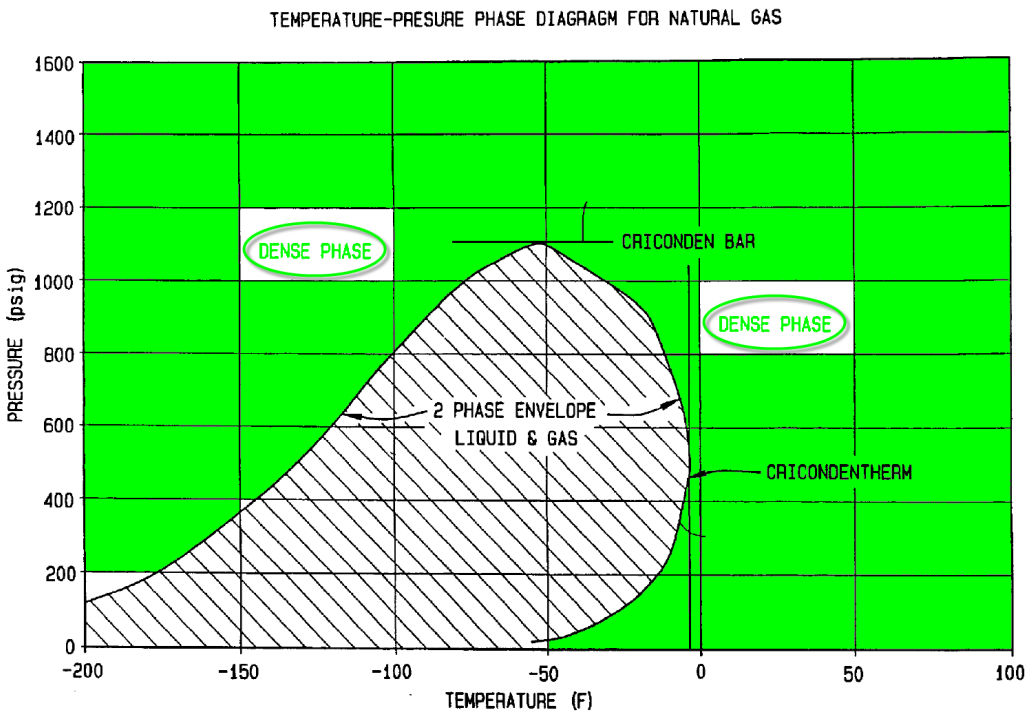

F17C 2223/0123

gaseous, e.g. CNG, GNC

Definition statement

This place covers:

The single phase of the fluid stored in the pressure vessel or before transfer from the pressure vessel is gaseous.

In this positive example from US201007229, compressed hydrogen gas is stored.

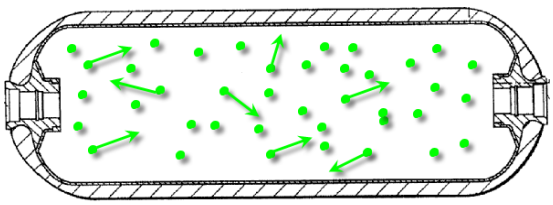

Synonyms and Keywords

In patent documents, the following abbreviations are often used:

CNG	Compressed Natural Gas
GNC	Gaz Naturel Comprimé

F17C 2223/013

liquid

Definition statement

This place covers:

The single phase of the fluid stored in the pressure vessel or before transfer from the pressure vessel is liquid.

Special rules of classification

Fluids in liquid form, other than "gas" in the sense of the definition for this subclass, should not be classified in F17C. Some documents though may appear in which the liquid form is present e.g. a vessel filled completely with pure subcooled gas.

F17C 2223/0138

solid

Definition statement

This place covers:

The single phase of the fluid stored in the pressure vessel or before transfer from the pressure vessel is solid.

In this positive example from WO2011093786A1, a solid block of CO_2 is placed into the vessel during manufacturing.

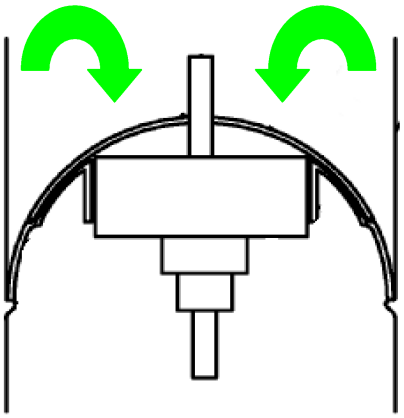

Special rules of classification

Fluids in solid form, other than "gas" in the sense of the definition for this subclass, should not be classified in F17C. Some documents though may appear in which the solid form is present.

F17C 2223/0146

Two-phase

Definition statement

This place covers:

Fluid stored in the pressure vessel or before transfer from the pressure vessel is in a two-phase state.

F17C 2223/0153

Liquefied gas, e.g. LPG, GPL

Definition statement

This place covers:

The two-phase state is liquid and gaseous, and the fluid concerned can be liquefied at high pressure under normal temperatures, like butane or propane.

In this positive example from DE102004044259, liquefied propane is stored.

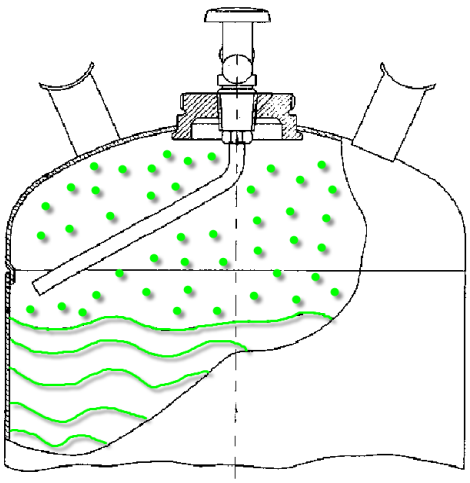

Synonyms and Keywords

In patent documents, the following abbreviations are often used:

LPG	Liquefied Petroleum Gas
GPL	Gaz Pétrole Liquéfié

F17C 2223/0161

cryogenic, e.g. LNG, GNL, PLNG

Definition statement

This place covers:

The two-phase state is liquid and gaseous, and the fluid concerned is in liquid state at cryogenic temperature, like oxygen, hydrogen or natural gas.

In this positive example from WO2010039198, liquefied hydrogen is stored.

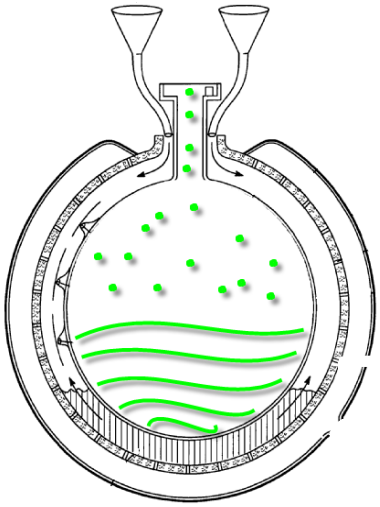

References

Informative references

Attention is drawn to the following places, which may be of interest for search:

Cold rooms using liquefied gases	F25D 3/10, F25D 3/11

Synonyms and Keywords

In patent documents, the following abbreviations are often used:

LNG	Liquefied Natural Gas
GNL	Gaz Naturel Liquéfié
PLNG	Pressurized Liquefied Natural Gas

F17C 2223/0169

subcooled

Definition statement

This place covers:

The liquid and gaseous two-phase state is additionally sub-cooled, i.e. at a temperature lower than saturation temperature.

In this positive example from EP1353112, liquid CO_2 is subcooled.

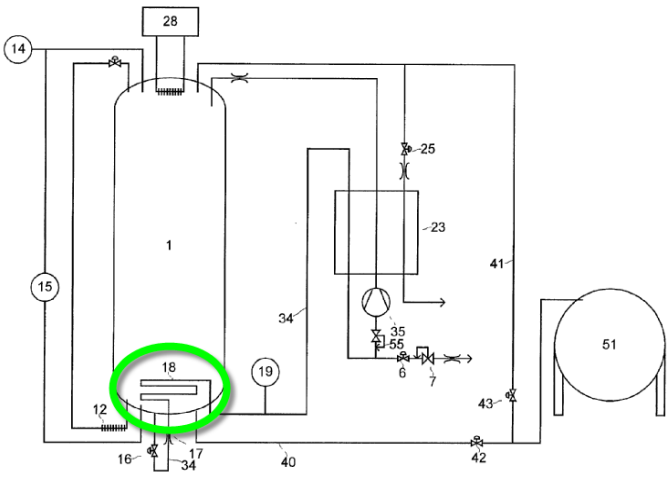

F17C 2223/0176

Solids and gas

Definition statement

This place covers:

The two-phase state is solid and gaseous, like CO_2 dry ice.

In this positive example from WO9403288, solid carbon dioxide sublimates.

References

Informative references

Attention is drawn to the following places, which may be of interest for search:

Cold rooms using solidified gases	F25D 3/12, F25D 3/14

F17C 2223/0184

Liquids and solids

Definition statement

This place covers:

The two-phase state is solid and liquid, like hydrates.

F17C 2223/0192

Three-phase, e.g. CO_2 at triple point

Definition statement

This place covers:

Fluid stored in the pressure vessel or before transfer from the pressure vessel is in a three-phase state, i.e. at the triple point.

In this phase diagram extracted from Wikipedia, the triple point is visualised.

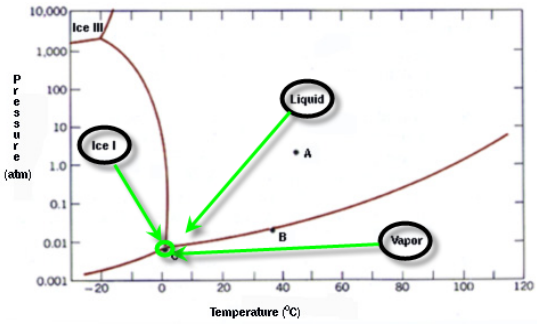

F17C 2223/03

characterised by the pressure level

Definition statement

This place covers:

Pressure of the fluid stored in the pressure vessel or before transfer from the pressure vessel.

Special rules of classification

The rule of classification, according to which a technical feature has to be explicitly mentioned, is not strictly applicable here: pressure can be estimated, if there are sufficient hints.

The boundaries indicated in the groups (1 bar, 10 bars, 80 bars) are merely to be understood as an indication and an order of magnitude. They are not binding or strict.

In doubt, it might be useful to classify into two adjacent classes (high pressure and very high pressure, high pressure and small pressure, or small pressure and not under pressure) simultaneously.

Hints allowing to estimate pressure can be in the drawings, like the thickness of the vessel wall, or knowledge from the context or the application the fluid is used in.

F17C 2223/031

Not under pressure, i.e. containing liquids or solids only

Definition statement

This place covers:

The pressure is very low, around 1 bar absolute, or the vessel is not under pressure, open and in direct contact with the environment.

In this positive example from EP2103863, liquid oxygen is stored under lowest pressure.

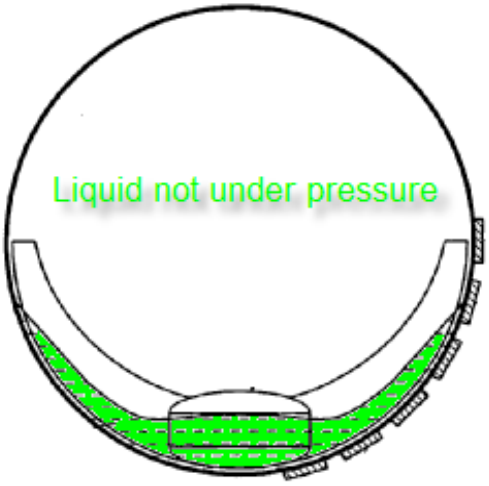

F17C 2223/033

Small pressure, e.g. for liquefied gas

Definition statement

This place covers:

The pressure is low, from 1 to 10 bars absolute, or the pressure vessel contains liquefied gas and is submitted to its vapor pressure.

F17C 2223/035

High pressure (>10 bar)

Definition statement

This place covers:

The pressure is high, from 10 bars to 80 bars absolute.

F17C 2223/036

Very high pressure (>80 bar)

Definition statement

This place covers:

The pressure is very high, above 80 bars absolute.

F17C 2223/038

Subatmospheric pressure

Definition statement

This place covers:

The pressure is sub-atmospheric, e.g. when vacuum is intentionally maintained in the pressure vessel.

F17C 2223/041

Stratification

Definition statement

This place covers:

Fluid within one phase discloses different layers e.g. liquefied gas which is sub-cooled in the lower layers of the liquid phase, and at saturation temperature in the higher layers of the liquid phase.

In this positive example from WO9941164, stratification is obtained in a gaseous fluid.

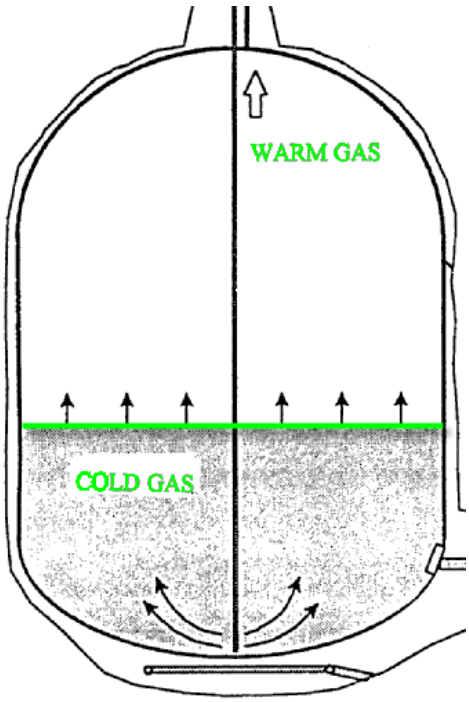

In this positive example from JP59019800, liquefied gas stratifies in two layers.

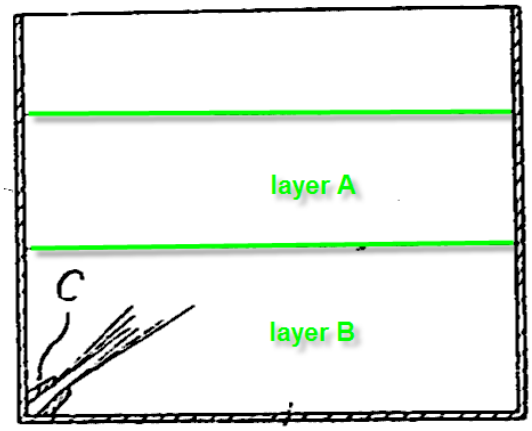

In this negative example from WO0134235, a liquid phase is topped by the vapor phase. Each phase is homogeneous.

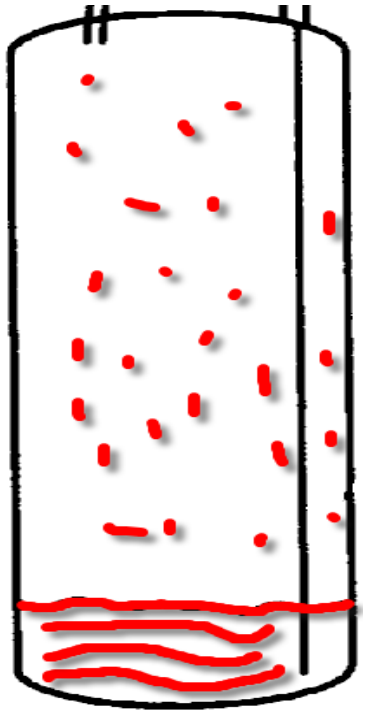

F17C 2223/042

Localisation of the removal point

Definition statement

This place covers:

Fluid removal point with a particular location or position.

In this positive example from CH239535, the upper removal tube is bent upwards in a detailed drawing.

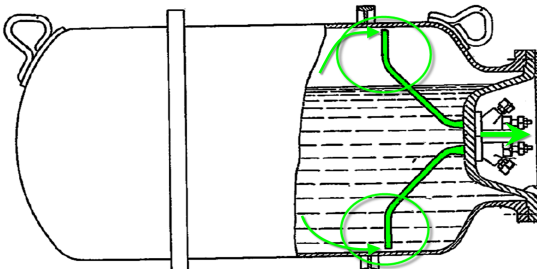

In this positive, more schematic example from WO0134235, a tube is prolonged inside the liquid in the vessel.

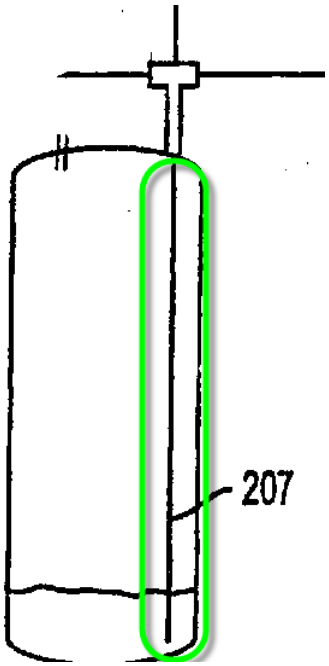

Special rules of classification

Only documents in which the vessel contains at least two phases of the fluid should be classified. There is no need to classify a removal point in the gas for a vessel in which there is nothing else than gas.

F17C 2223/043

in the gas

Definition statement

This place covers:

Fluid removed is gas only or removal point is situated in the gas phase.

In this positive example from FR2607575 the removal tube's end is located on top of the vessel.

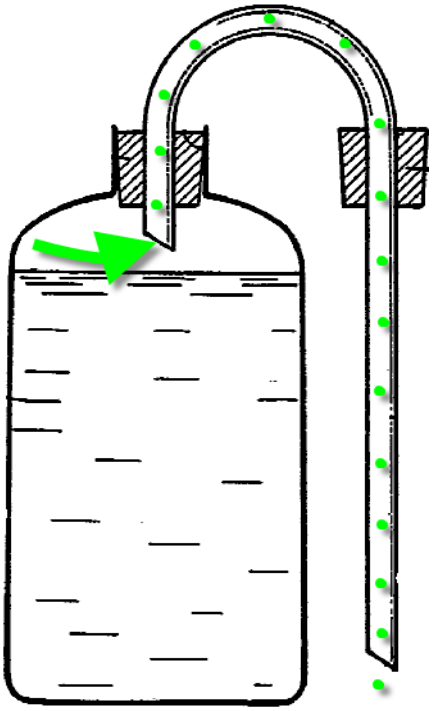

F17C 2223/045

with a dip tube

Definition statement

This place covers:

Gas is removed through a tube that extends into the vessel through the liquid phase.

In this positive example from CH239535, the upper tube reaches the gas phase through the liquid phase.

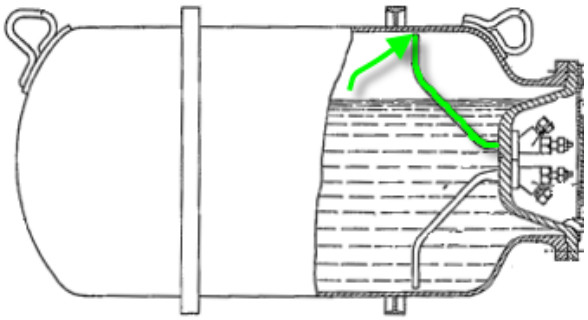

F17C 2223/046

in the liquid

Definition statement

This place covers:

Fluid removed is liquid only or removal point is situated in the liquid phase.

In this positive example from DE102005002976, liquid carbon dioxide is removed from the bottom of the vessel.

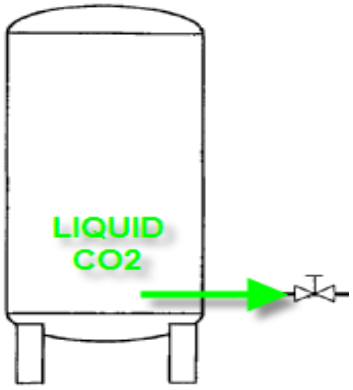

F17C 2223/047

with a dip tube

Definition statement

This place covers:

Liquid is removed through a tube that extends into the vessel through the gas phase.

In this positive example from WO2007107509, liquefied natural gas is removed with a dip tube.

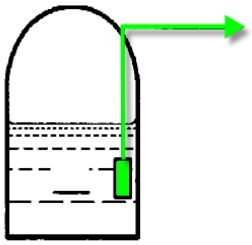

F17C 2223/048

in the solid

Definition statement

This place covers:

Fluid removed is solid only or removal point is situated in the solid phase.

F17C 2225/00

Handled fluid after transfer, i.e. state of fluid after transfer from the vessel

Definition statement

This place covers:

Particular characteristics of the fluid after being transferred.

In this positive example from EP1846691, the handled fluid after transfer is gaseous.

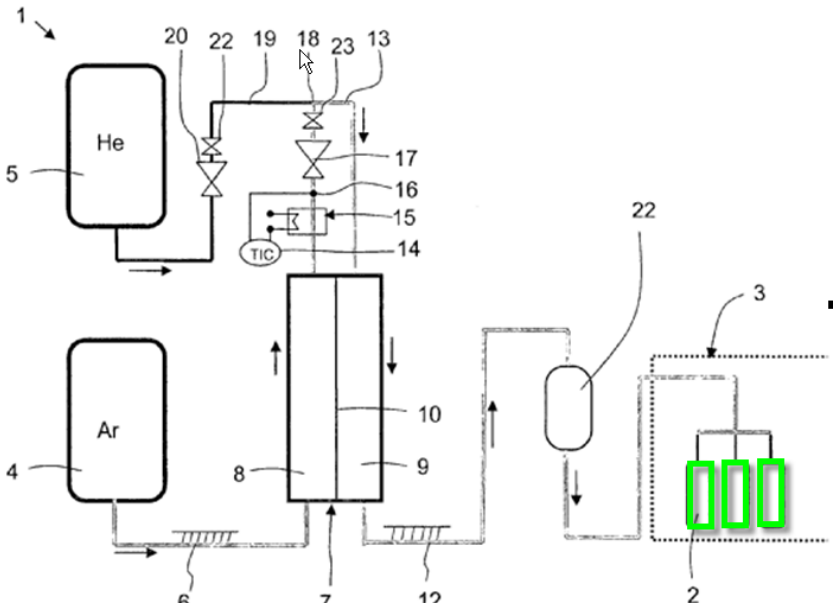

Special rules of classification

If a network of pressure vessels, the discharge from each pressure vessel has to be considered separately and eventually classified.

E.g.: if a vessel 1 is emptied into a vessel 2, vessel 1 may be considered for classification into F17C 2223/00 and its sub-groups, and vessel 2 has to be considered for classification into F17C 2225/00 and its sub-groups. Finally, actual classification should only take place if "interesting", specific or unconventional transfer processes are disclosed.

Consult also F17C 2223/00

F17C 2225/01

characterised by the phase

Definition statement

This place covers:

Phase of the fluid after being transferred.

F17C 2225/0107

Single phase

Definition statement

This place covers:

Fluid after being transferred is in a single phase.

F17C 2225/0115

dense or supercritical, i.e. at high pressure and high density

Definition statement

This place covers:

The single phase of the fluid after being transferred is dense or supercritical, i.e. at a temperature or pressure above the critical point, where no distinction between liquid or gas exists.

In this positive example from US2003115889, natural gas is in dense phase.

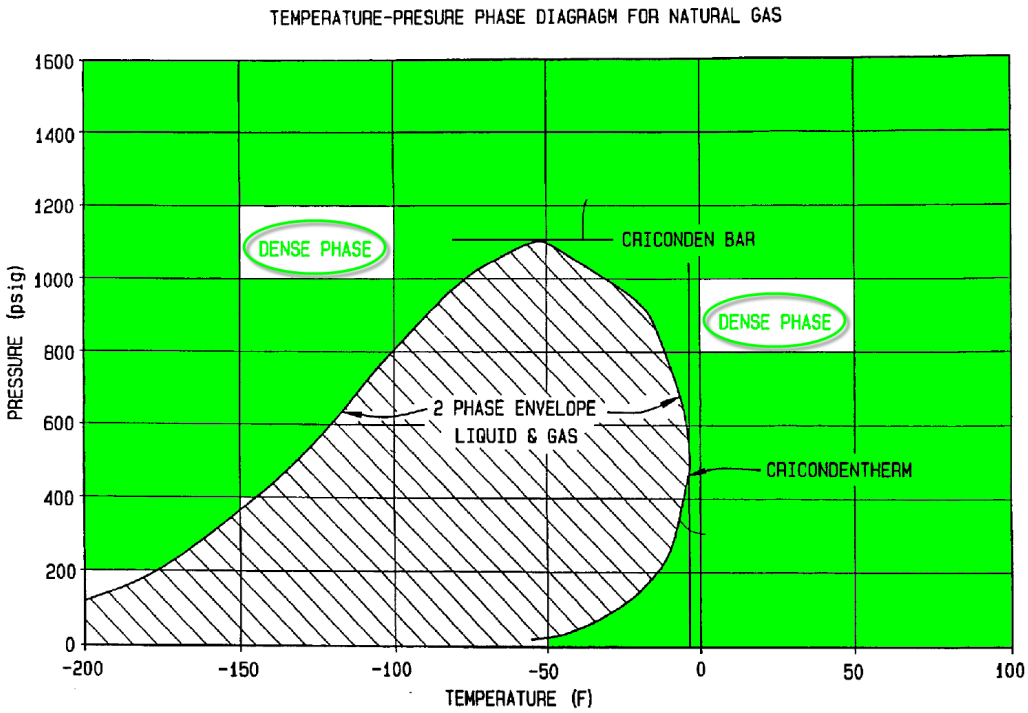

F17C 2225/0123

gaseous, e.g. CNG, GNC

Definition statement

This place covers:

The single phase of the fluid after being transferred is gaseous.

In this positive example from CH209041, gas is transferred.

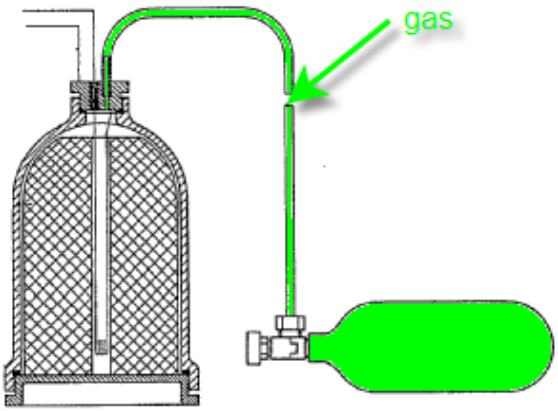

Synonyms and Keywords

In patent documents, the following abbreviations are often used:

CNG	Compressed Natural Gas
GNC	Gaz Naturel Comprimé

F17C 2225/013

liquid

Definition statement

This place covers:

The single phase of the fluid after being transferred is liquid.

Special rules of classification

Fluids in liquid form, other than "gas" in the sense of the definition for this subclass, should not be classified in F17C. Some documents though may appear in which the liquid form is present e.g. a vessel filled completely with pure subcooled gas

F17C 2225/0138

solid

Definition statement

This place covers:

The single phase of the fluid after being transferred is solid.

Special rules of classification

Fluids in solid form, other than "gas" in the sense of the definition for this subclass, should not be classified in F17C. Some documents though may appear in which the solid form is present.

F17C 2225/0146

Two-phase

Definition statement

This place covers:

Fluid after being transferred is in a two-phase state.

F17C 2225/0153

Liquefied gas, e.g. LPG, GPL

Definition statement

This place covers:

The two-phase state is liquid and gaseous, and the fluid concerned can be liquefied at high pressure under normal temperatures, like butane or propane.

In this positive example from WO2005058684, liquefied gas is transferred without phase change.

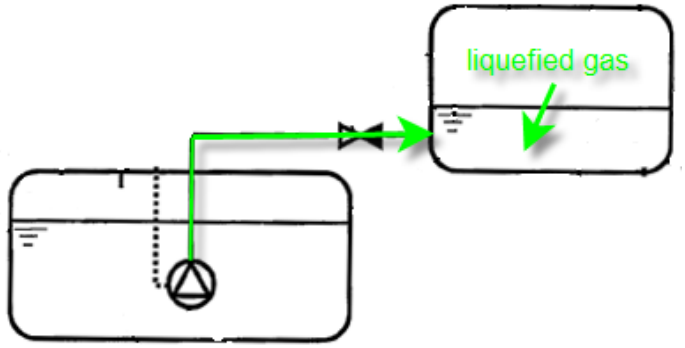

Synonyms and Keywords

In patent documents, the following abbreviations are often used:

LPG	Liquefied Petrol Gas
GPL	Gaz Pétrole Liquéfié

F17C 2225/0161

cryogenic, e.g. LNG, GNL, PLNG

Definition statement

This place covers:

The two-phase state is liquid and gaseous, and the fluid is liquefied under cryogenic temperatures, like oxygen, hydrogen or natural gas.

Synonyms and Keywords

In patent documents, the following abbreviations are often used:

LNG	liquefied natural gas
GNL	Gaz Naturel Liquéfié

PLNG	pressurized liquefied natural gas

F17C 2225/0169

subcooled

Definition statement

This place covers:

The two-phase state is liquefied gas, and the fluid phase is additionally sub-cooled, i.e. at a temperature lower than saturation temperature.

F17C 2225/0176

Solids and gas

Definition statement

This place covers:

The two-phase state is solid and gaseous, like CO_2 dry ice.

References

Informative references

Attention is drawn to the following places, which may be of interest for search:

Cold rooms using solidified gases	F25D 3/12- F25D 3/14

F17C 2225/0184

Liquids and solids

Definition statement

This place covers:

The two-phase state is solid and liquid, like hydrates.

F17C 2225/0192

Three-phase, e.g. CO_2 at triple point

Definition statement

This place covers:

Fluid after being transferred is in a three-phase state, i.e. at the triple point.

F17C 2225/03

characterised by the pressure level

Definition statement

This place covers:

Pressure of the fluid after being transferred.

Special rules of classification

The rule of classification, according to which a technical feature has to be explicitly mentioned, is not strictly applicable here: pressure can be estimated, if there are sufficient hints.

The boundaries indicated in the groups (1 bar, 10 bars, 80 bars) are merely to be understood as an indication and an order of magnitude. They are not binding or strict.

In doubt, it might be useful to classify into two adjacent classes (high pressure and very high pressure, high pressure and small pressure, or small pressure and not under pressure) simultaneously.

Hints allowing to estimate pressure can be in the drawings, like the thickness of the vessel wall, or knowledge from the context or the application the fluid is used in.

F17C 2225/031

Not under pressure, i.e. containing liquids or solids only

Definition statement

This place covers:

The pressure is very low, around 1 bar absolute, or the vessel is not under pressure, open and in direct contact with the environment.

F17C 2225/033

Small pressure, e.g. for liquefied gas

Definition statement

This place covers:

The pressure is low, from 1 to 10 bars absolute, or the pressure vessel contains liquefied gas and is submitted to its vapor pressure.

F17C 2225/035

High pressure, i.e. between 10 and 80 bars

Definition statement

This place covers:

The pressure is high, from 10 bars to 80 bars absolute.

F17C 2225/036

Very high pressure, i.e. above 80 bars

Definition statement

This place covers:

The pressure is very high, above 80 bars absolute.

F17C 2225/038

Subatmospheric pressure

Definition statement

This place covers:

The pressure is sub-atmospheric, e.g. when vacuum is intentionally maintained in the pressure vessel.

F17C 2225/041

Stratification

Definition statement

This place covers:

Fluid within one phase discloses different layers e.g. liquefied gas which is sub-cooled in the lower layers of the liquid phase, and at saturation temperature in the higher layers of the liquid phase.

F17C 2225/042

Localisation of the filling point

Definition statement

This place covers:

Fluid filling point with a particular location or position.

Special rules of classification

Only documents in which the vessel contains at least two phases of the fluid should be classified. There is no need to classify a filling point in the gas for a vessel in which there is nothing else than gas.

F17C 2225/043

in the gas

Definition statement

This place covers:

Fluid filling point is situated in the gas phase.

In this positive example from US2008141684, the filling tube's is located in the gas phase.

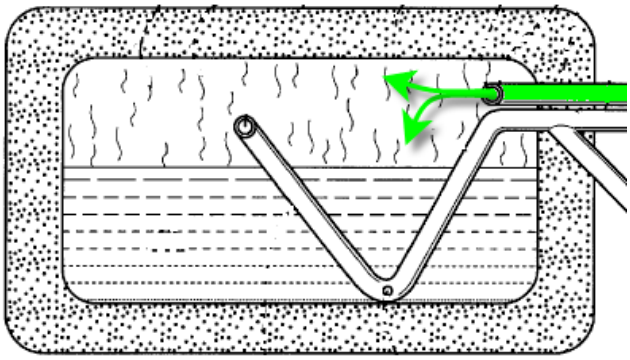

F17C 2225/044

at several points, e.g. with a device for recondensing gas

Definition statement

This place covers:

Fluid is filled at several filling points, and condenses at the same time surrounding gas vapor.

In this positive example from WO2008099977, filling takes place at several points in the gas phase, where recondensation takes place.

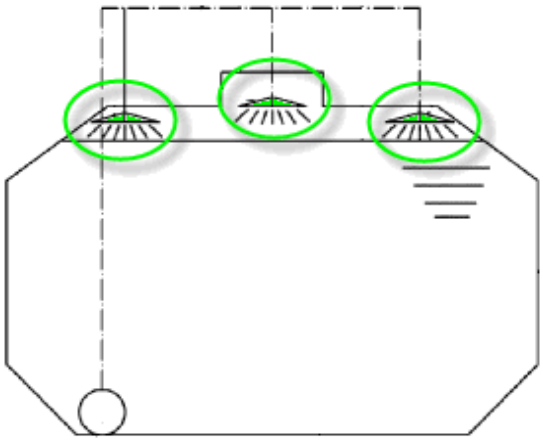

F17C 2225/045

with a dip tube

Definition statement

This place covers:

Gas is filled through a tube that extends into the vessel through the liquid phase.

In this positive example from US2008141684, the upper tube reaches the gas phase through the liquid phase.

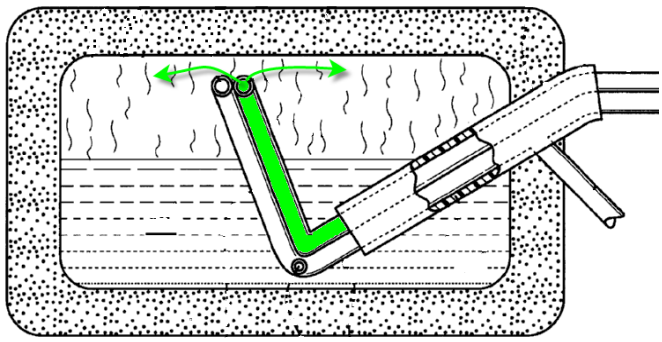

F17C 2225/046

in the liquid

Definition statement

This place covers:

Fluid filling point is situated in the liquid phase.

In this positive example from US5404918 the filling tube's end is located on bottom of the vessel.

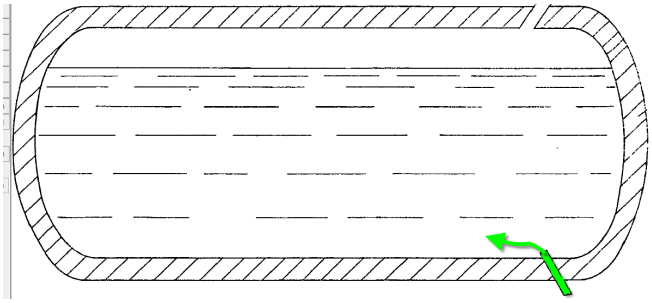

F17C 2225/047

with a dip tube

Definition statement

This place covers:

Liquid is filled through a tube that extends into the vessel through the gas phase.

In this positive example from FR2607575 the filling tube's end is located on the bottom of the vessel.

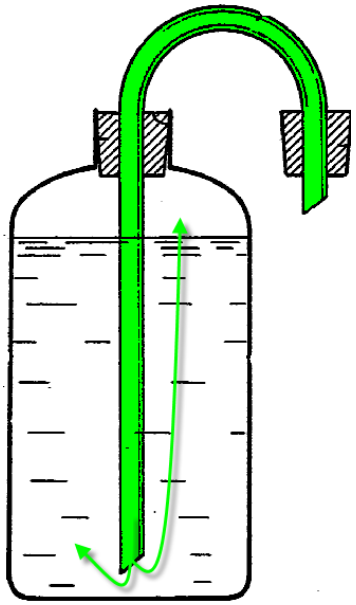

F17C 2225/048

in the solid

Definition statement

This place covers:

Fluid filling point is situated in the solid phase.

F17C 2227/00

Transfer of fluids, i.e. method or means for transferring the fluid; Heat exchange with the fluid

Definition statement

This place covers:

Methods or means for transferring fluid out of or into a pressure vessel. Method or means for achieving thermal exchange with fluid stored in or transferred out of or into a pressure vessel.

F17C 2227/01

Propulsion of the fluid

Definition statement

This place covers:

Methods or means for transferring fluid out of or into a pressure vessel.

In this positive example from US2836963, the pressure vessel contains a piston.

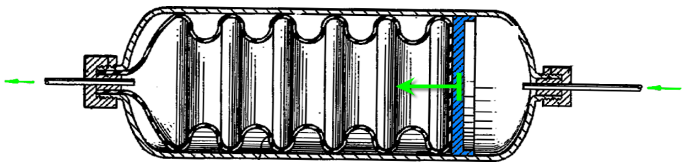

In this negative example from BE471532, fluid is discharged after opening the valve.

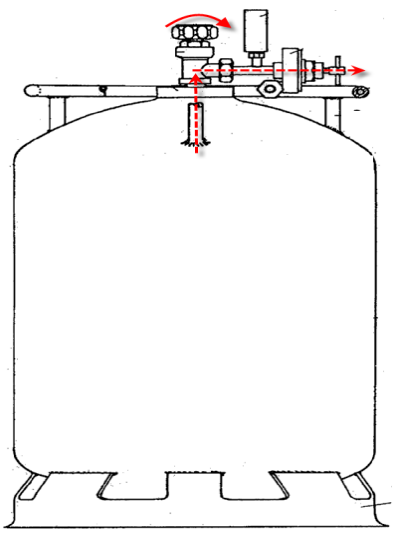

Special rules of classification

When the valve of a pressurized vessel is opened, fluid flows by pressure difference out of the vessel. This standard discharge of a pressure vessel is not classified, unless additional features make the discharge more specific.

Propulsion means like pumps or compressors are to be classified in relevant classes.

F17C 2227/0107

by pressurising the ullage

Definition statement

This place covers:

Methods of transferring liquefied gas out of a pressure vessel by raising the pressure of the vapor phase (the ullage), so that the vapor phase pushes on the liquid surface. The pressure raise is often operated by vaporizing part of the liquefied gas with a heater.

In this positive example from US2007186925, a heating element evaporates liquefied gas in the vessel.

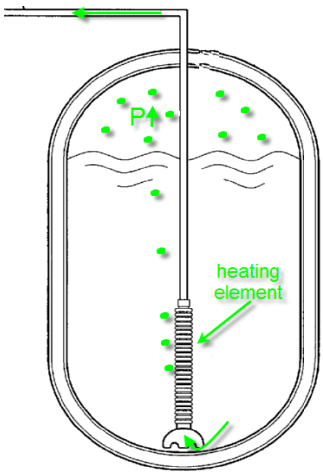

In this negative example from US2007017596, an external purge gas replaces the vapor phase. Though gas is added in the ullage, the purpose is not to specifically to discharge the vessel.

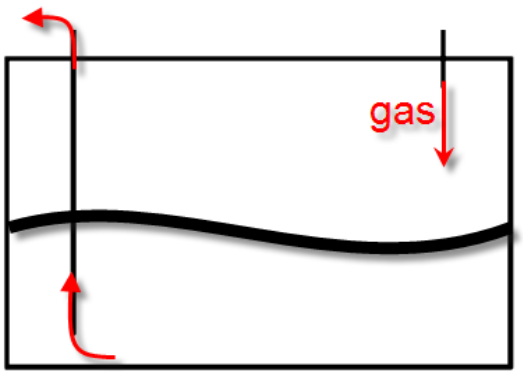

Special rules of classification

Any vessel containing liquefied gas is subject to a pressure rise when heat influx takes place. Only those documents are classified herein in which the pressure rise serves specifically the purpose of discharging the vessel.

F17C 2227/0114

with vacuum injectors, e.g. venturi

Definition statement

This place covers:

Methods of transferring fluid out of or into a pressure vessel by using vacuum created by a vacuum injector, e.g. venturi type.

In this positive example from US2007261756, extraction takes place by a venturi pump.

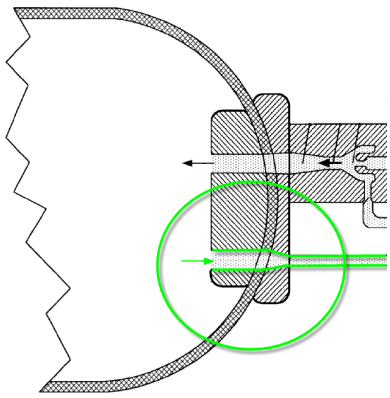

F17C 2227/0121

by gravity

Definition statement

This place covers:

Methods of transferring fluid by gravity out of a pressure vessel, the weight of the fluid itself discharging the vessel.

In this positive example from EP1770326, an exit is simply mounted on the bottom of the vessel.

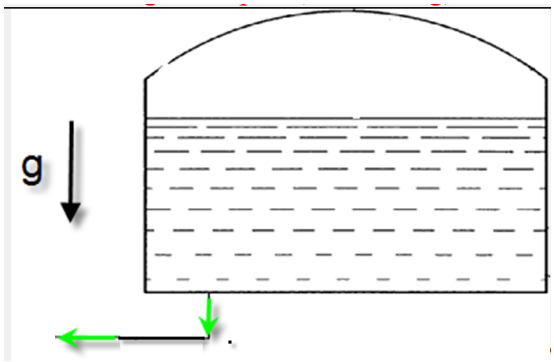

F17C 2227/0128

with pumps or compressors

Definition statement

This place covers:

Methods of transferring out of or into a pressure vessel fluid by using pumps or compressors.

References

Informative references

Attention is drawn to the following places, which may be of interest for search:

Positive displacement machines for liquids; Pumps	F04B

Special rules of classification

Pumps generally are used for the liquid phase and compressors for the gas phase. This rule should be followed for classification. Though, the distinction is not always clear, e.g. for supercritical fluid, for which both terms are used.

F17C 2227/0135

Pumps

Definition statement

This place covers:

Methods of transferring liquid fluid out of or into a pressure vessel, by using pumps.

In this positive example from WO9709561, a pump is immersed in the vessel.

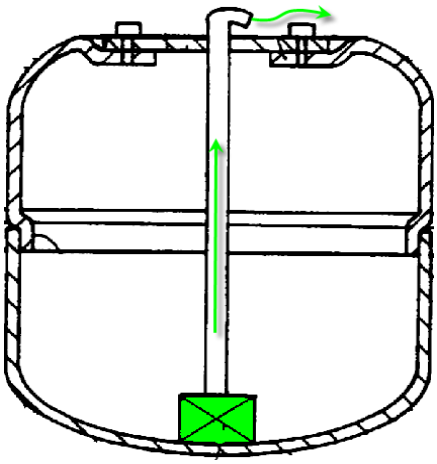

F17C 2227/0142

with specified pump type, e.g. piston or impulsive type

Definition statement

This place covers:

Methods of transferring liquid fluid out of or into a pressure vessel by using a pump, the type of which is specified, e.g. of piston type.

In this positive example from US3426545, a piston type pump is used.

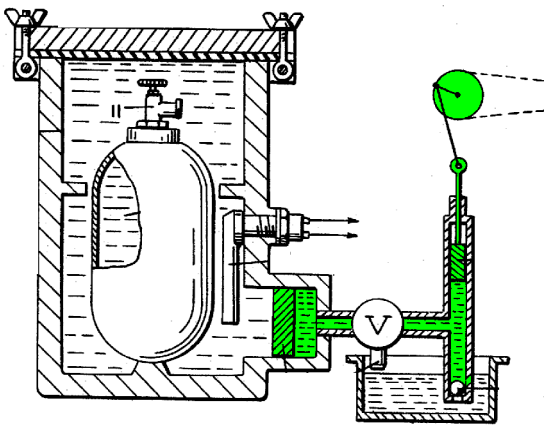

F17C 2227/015

with cooling of the pump

Definition statement

This place covers:

Methods of transferring liquid fluid out of or into a pressure vessel using pumps, wherein the pump is cooled.

F17C 2227/0157

Compressors

Definition statement

This place covers:

Methods of transferring gas out of or into a pressure vessel using a compressor.

In this positive example from DE102009039645, a compressor compresses gas from the tank.

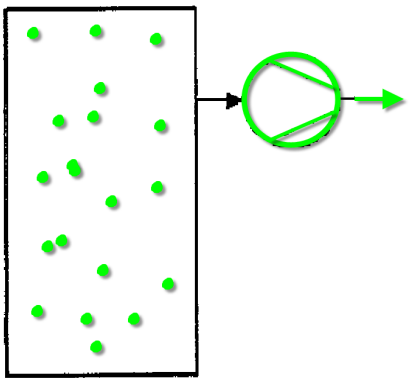

F17C 2227/0164

with specified compressor type, e.g. piston or impulsive type

Definition statement

This place covers:

Methods of transferring gas out of or into a pressure vessel using a compressor, the type of which being specified, e.g. piston type.

In this positive example from US2003021743, a high pressure piston compressor is used.

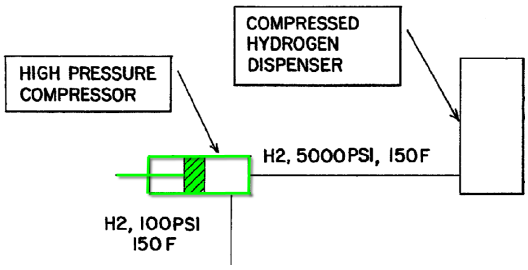

F17C 2227/0171

Arrangement

Definition statement

This place covers:

Special localization or configuration of pumps or compressors used to transfer fluid out of or into a pressure vessel.

F17C 2227/0178

in the vessel

Definition statement

This place covers:

Localization of pumps or compressors used to transfer fluid out of or into a pressure vessel inside a vessel.

In this positive example from FR2722760, the pump is immersed.

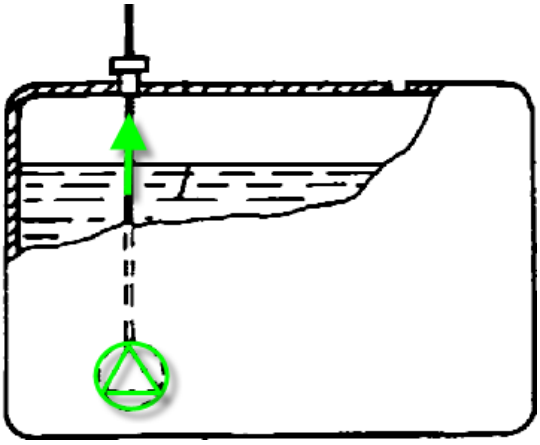

F17C 2227/0185

comprising several pumps or compressors

Definition statement

This place covers:

Configuration of pumps or compressors used to transfer fluid out of or into a pressure vessel, in which several pumps or compressors are used or usable.

In this positive example from US2006150640, three pumps transfer cryogen.

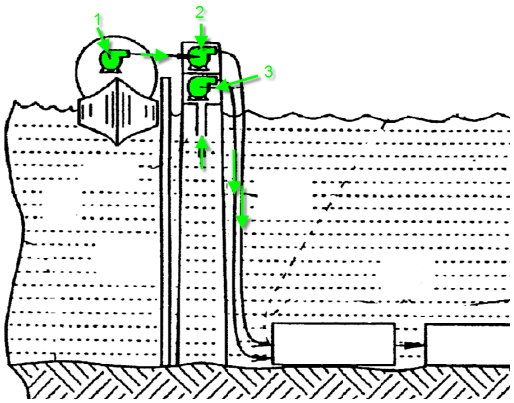

F17C 2227/0192

by using a working fluid

Definition statement

This place covers:

Methods of transferring fluid out of or into a pressure vessel using a working fluid. This working fluid replaces and pushes the fluid to be transferred. The working fluid may be in direct contact with the fluid to be transferred or separated by an element like a membrane or a piston. The working fluid is different from the transferred fluid.

In this positive example from DE29816811U, a piston separates the working fluid from the gas.

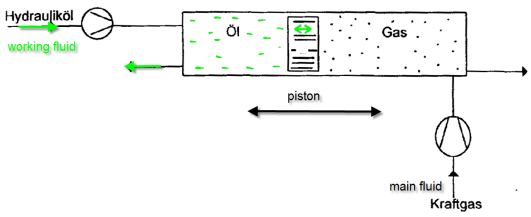

In this negative example from US2007186925, the vaporized fluid itself pressurises the ullage and pushes the liquefied gas.

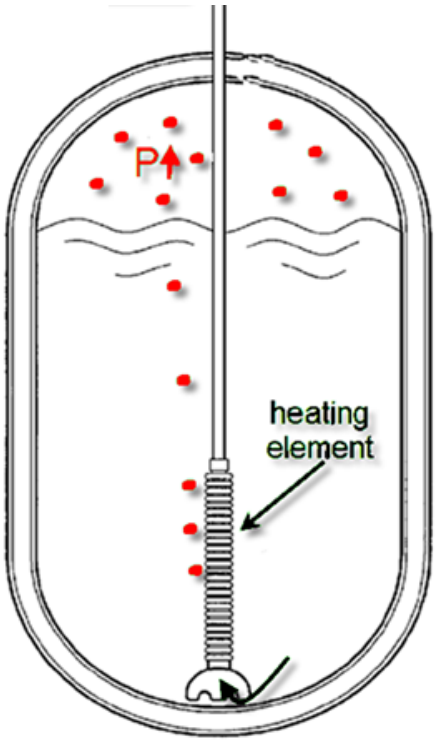

References

Informative references

Attention is drawn to the following places, which may be of interest for search:

Positive displacement machines for liquids, pumps	F04B
Fluid pressure actuators	F15B 1/04, F15B 1/265

Special rules of classification

Transfer or gas by pressurizing the ullage should be classified in F17C 2227/0107

F17C 2227/03

Heat exchange with the fluid

Definition statement

This place covers:

Method or means for achieving thermal exchange with fluid transferred, the thermal exchange being heating or cooling, direct or indirect or via intermediate fluids, and taking place anywhere.

In this positive example from US20070186564, the part of the scheme related to the actual process gas is restricted to one heat exchanger 114.

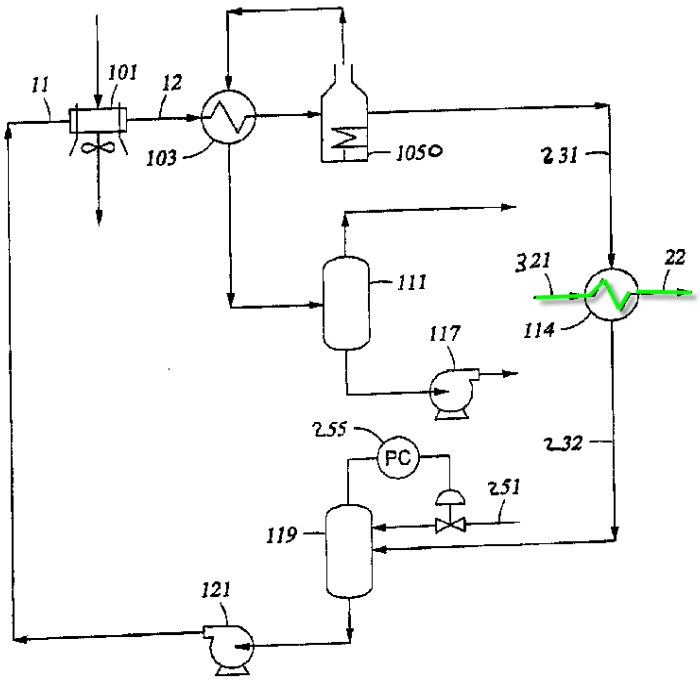

References

Informative references

Attention is drawn to the following places, which may be of interest for search:

Boilers	F25B 33/00
Evaporators; Condensers	F25B 39/00
Subcoolers, desuperheaters or superheaters	F25B 40/00
Heat exchange in general	F28
Steam or vapour condensers	F28B
Heat exchange apparatus, without contact between heat exchange media	F28D

Special rules of classification

The terms "heating" or "cooling" are defined with regard to the classified process gas only.

"Heating" means that heat is transferred to the gas. "Cooling" means that heat is transferred from the gas.

Heating or cooling of external fluid carriers like intermediate fluids are not classified herein.

F17C 2227/0302

by heating

Definition statement

This place covers:

Method or means for heating fluid transferred out of or into a pressure vessel.

In this positive example from US2007186925, a heating element heats and evaporates liquefied gas in the vessel.

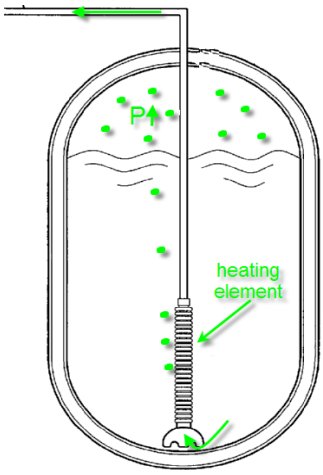

F17C 2227/0304

using an electric heater

Definition statement

This place covers:

Method or means for heating fluid by an electrical heater.

In this positive example from DE102005049252, an electrical heater is mounted on a pipe inside the vessel.

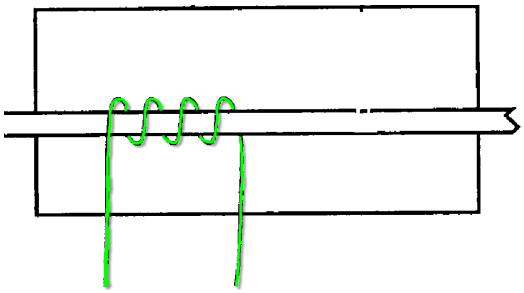

F17C 2227/0306

using the same fluid

Definition statement

This place covers:

Method or means for heating fluid by using the same fluid as the fluid transferred.

In this positive example from WO2005045337, the gaseous and the liquid phase of the fluid exchange heat in an external heat exchanger, the one being heated, the other cooled.

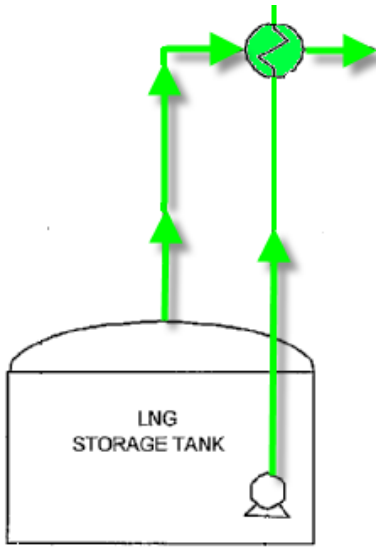

F17C 2227/0309

using another fluid

Definition statement

This place covers:

Method or means for heating fluid, the heat being obtained from another fluid than the fluid transferred.

In this positive example from US4995234, liquefied carbon dioxide exchanges heat with the LNG.

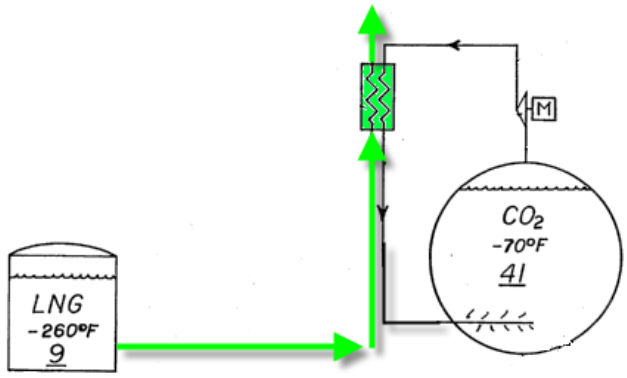

F17C 2227/0311

Air heating

Definition statement

This place covers:

Method or means for heating fluid , the heat being obtained from air.

In this positive example from US2007132116, air is used to vaporize LNG.

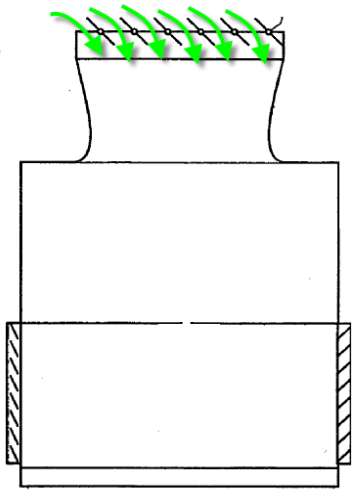

Special rules of classification

The heat source has to be considered, even if there are other intermediate heat carrying fluids.

If the heat source is air, then the document has to be classified herein.

F17C 2227/0313

by forced circulation, e.g. using a fan

Definition statement

This place covers:

Method or means for heating fluid, the heat being obtained from air in a forced circulation, e.g. by using a ventilator.

In this positive example from EP1724514, air is ventilated onto LNG.

F17C 2227/0316

Water heating

Definition statement

This place covers:

Method or means for heating fluid, the heat being obtained from water.

In this positive example from US2006288711, water vaporizes the LNG.

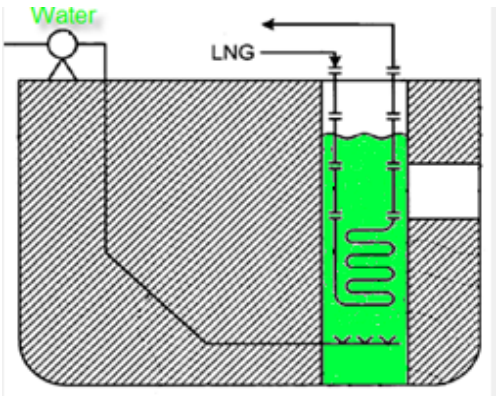

Special rules of classification

The heat source has to be considered, even if there are other intermediate heat carrying fluids.

If the heat source is water, then the document has to be classified herein.

F17C 2227/0318

using seawater

Definition statement

This place covers:

Method or means for heating fluid, the heat being obtained from seawater.

In this positive example from US2006288711, seawater vaporizes the LNG.

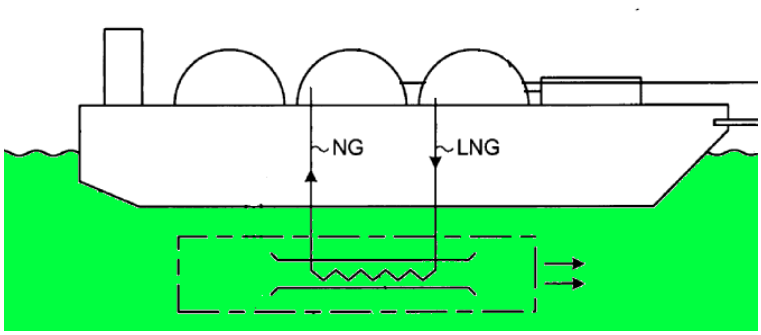

Special rules of classification

The heat source has to be considered, even if there are other intermediate heat carrying fluids.

If the heat source is seawater, then the document has to be classified herein

F17C 2227/032

using geothermal water

Definition statement

This place covers:

Method or means for heating fluid, the heat being obtained from geothermal water.

In this positive example from US2007079617, geothermal water vaporizes the LNG.

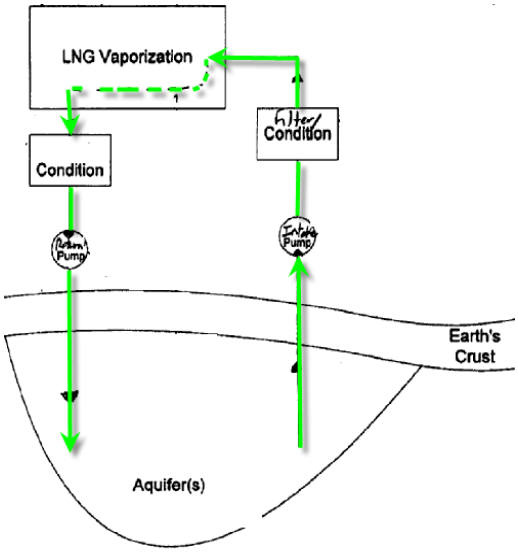

Special rules of classification

The heat source has to be considered, even if there are other intermediate heat carrying fluids.

If the heat source is geothermal water, then the document has to be classified herein

F17C 2227/0323

in a closed loop

Definition statement

This place covers:

Method or means for heating fluid, the heat being obtained from another fluid that circulates in a closed loop. This other fluid is often an intermediate heat carrying fluid, like propane or an alcohol, chosen so as not to freeze in contact with the cryogen.

In this positive example from WO2009068731, an intermediate fluid is used to vaporize LNG.

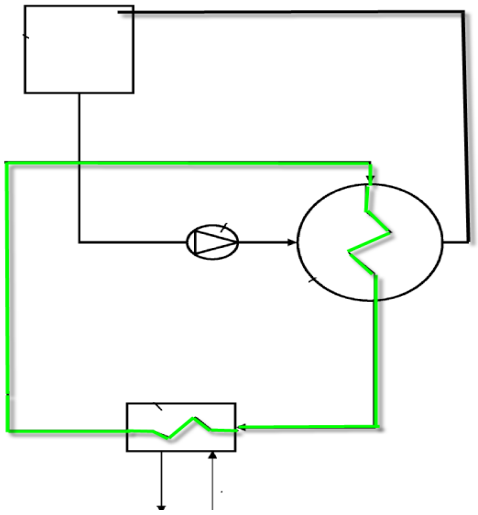

F17C 2227/0327

with recovery of heat

Definition statement

This place covers:

Method or means for heating fluid, the heat being recovered for later reuse.

In this positive example from WO2007019946, LNG is vaporized, and the cold energy used to liquefy oxygen.

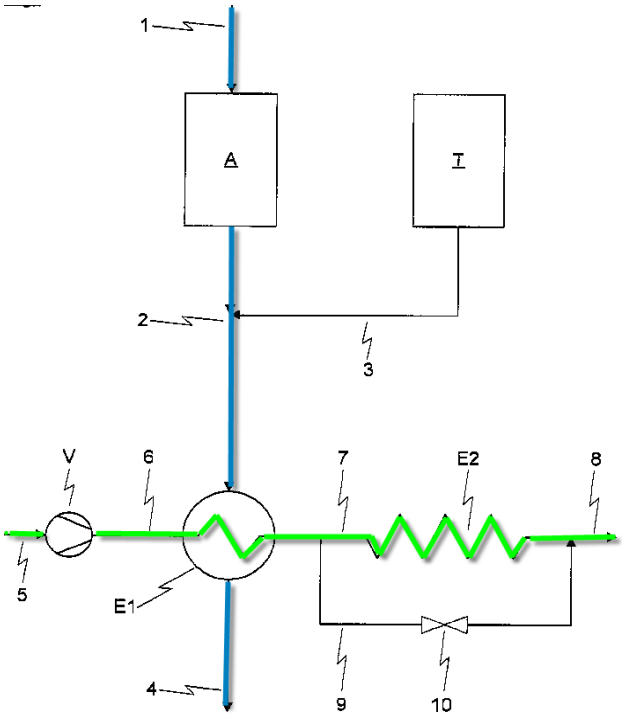

F17C 2227/033

using solar energy

Definition statement

This place covers:

Method or means for heating fluid, the heat being generated by solar energy.

F17C 2227/0332

by burning a combustible

Definition statement

This place covers:

Method or means for heating fluid, the heat being generated by burning a combustible.

In this positive example from WO2009032683, vaporizing of LNG occurs by using a submerged combustion vaporizer.

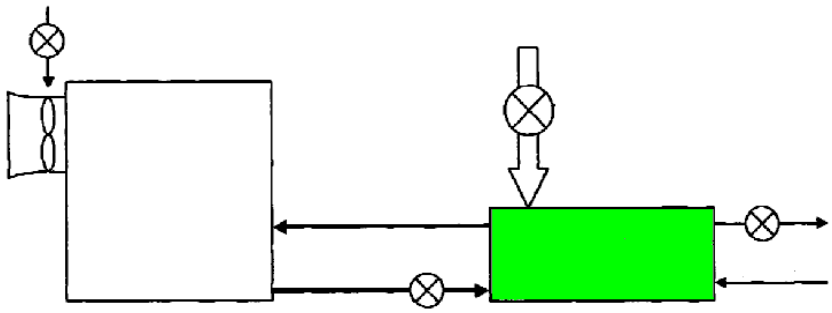

F17C 2227/0334

by radiation means

Definition statement

This place covers:

Method or means for heating fluid, the heat being generated by radiation from e.g. chemical processes.

F17C 2227/0337

by cooling

Definition statement

This place covers:

Method or means for cooling fluid transferred.

References

Informative references

Attention is drawn to the following places, which may be of interest for search:

Refrigeration or cooling	F25
Refrigeration machine	F25B
Liquefaction, solidification or separation of gases or gaseous mixtures by pressure and cold treatment	F25J

F17C 2227/0339

using the same fluid

Definition statement

This place covers:

Method or means for cooling fluid, the cooling effect being obtained by a using the same fluid as the fluid transferred out of or into a pressure vessel.

In this positive example from WO2005045337, the gaseous and the liquid phase of the fluid exchange heat in an external heat exchanger, the one being heated, the other cooled.

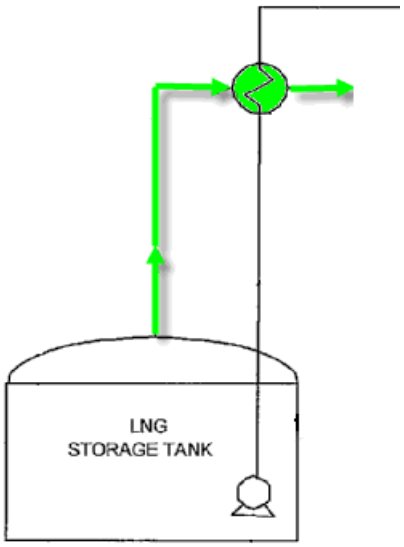

F17C 2227/0341

using another fluid

Definition statement

This place covers:

Method or means for cooling fluid, the cooling effect being obtained from another fluid than the fluid transferred out of or into a pressure.

In this positive example from EP1790904, hydrogen is cooled by nitrogen.

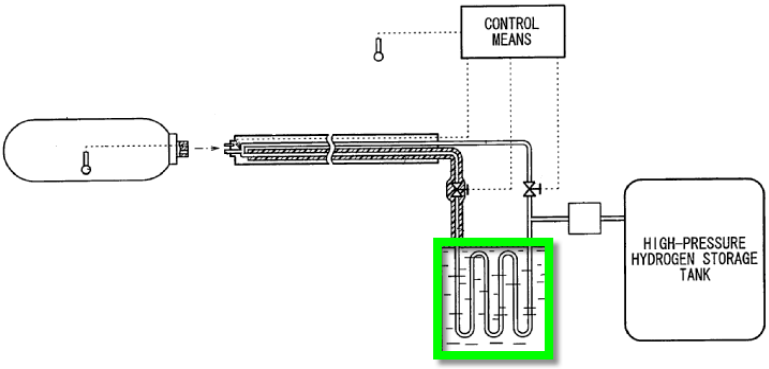

F17C 2227/0344

Air cooling

Definition statement

This place covers:

Method or means for cooling fluid, the cooling effect being obtained from air.

In this positive example from US2005284154, hot nitrogen gas is cooled by air.

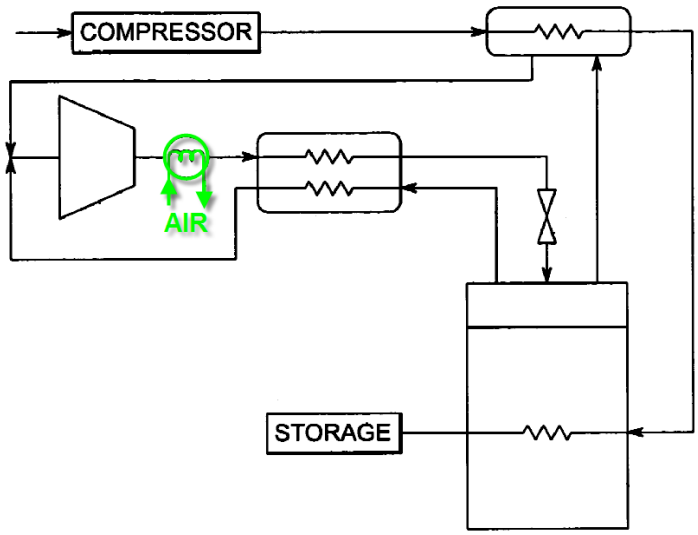

F17C 2227/0346

by forced circulation, e.g. using a fan

Definition statement

This place covers:

Method or means for cooling fluid, the cooling effect being obtained from air in a forced circulation, e.g. by using a ventilator.

In this positive example from EP2110596, the hydrogen storage tank is cooled by a fan.

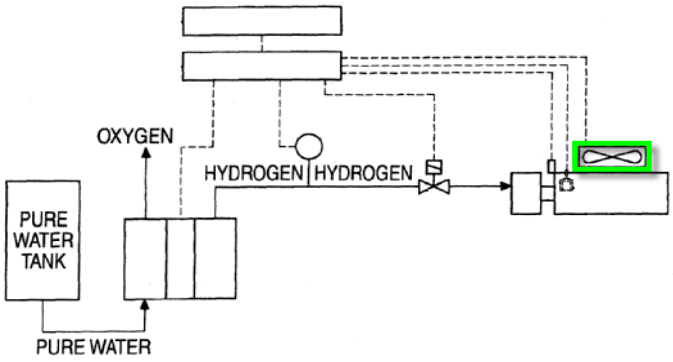

F17C 2227/0348

Water cooling

Definition statement

This place covers:

Method or means for cooling fluid, the cooling effect being obtained from water

In this positive example from US2009114290, gaseous CO_2 is condensed und thus cooled by using water.

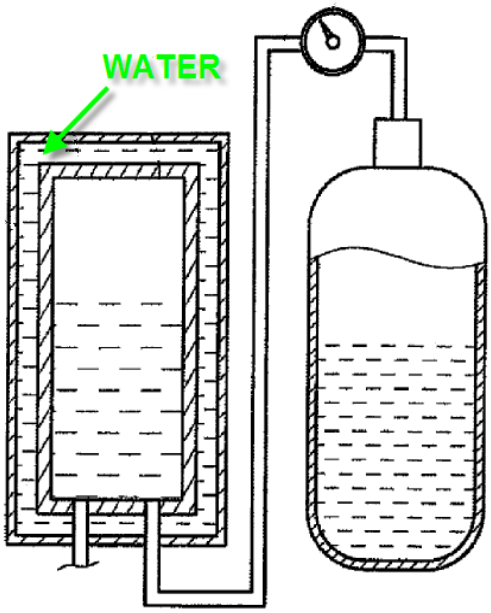

F17C 2227/0351

using seawater

Definition statement

This place covers:

Method or means for cooling fluid, the cooling effect being obtained from seawater.

In this positive example from US2720082, seawater is used to cool the liquefied gas of the storage tanks.

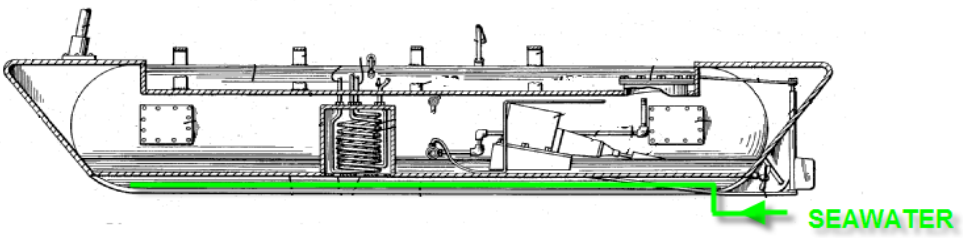

F17C 2227/0353

using cryocooler

Definition statement

This place covers:

Method or means for cooling fluid, the cooling effect being obtained from a cryocooler, which uses e.g. helium or another fluid to generate cryogenic temperature.

In this positive example from US2005204752, a helium cryocooler is disclosed.

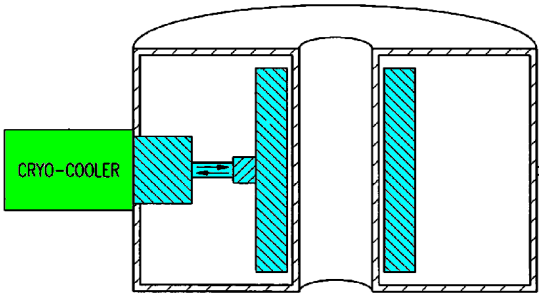

References

Informative references

Attention is drawn to the following places, which may be of interest for search:

Compression machine with several cooling stages	F25B 9/10
Compression machine using a Stirling cycle	F25B 9/14

F17C 2227/0355

in a closed loop

Definition statement

This place covers:

Method or means for cooling fluid, the cooing effect being obtained from another fluid that circulates in a closed loop.

In this positive example from WO2005071333, LNG boil-off gas is cooled in a closed-loop refrigeration system.

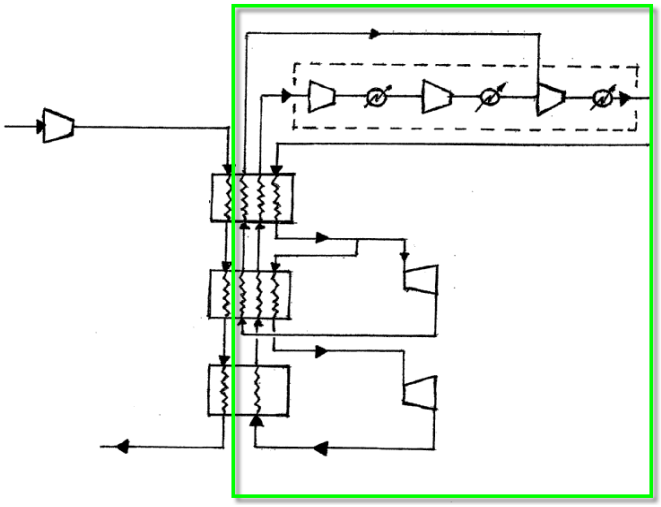

F17C 2227/0358

by expansion

Definition statement

This place covers:

Method or means for cooling fluid, the cooling effect being obtained from expansion of the fluid.

F17C 2227/036

"Joule-Thompson" effect

Definition statement

This place covers:

Method or means for cooling fluid, the cooling effect being obtained from expansion of the fluid, the Joule-Thompson effect being mentioned or clearly implicit like when using a throttle.

Joule-Thompson formula:

$$\mu_{Joule-Thomson} = \frac{\partial T}{\partial p}_{H=const.} = \frac{V}{C_p}(T\alpha - 1)$$

Special rules of classification

The Joule-Thompson effect can either be cooling or heating, depending on the inversion temperature.

F17C 2227/0362

in a turbine

Definition statement

This place covers:

Method or means for cooling fluid, the cooling effect being obtained from expansion in a turbine.

In this positive example from WO2007028221, nitrogen is expanded in a turbine.

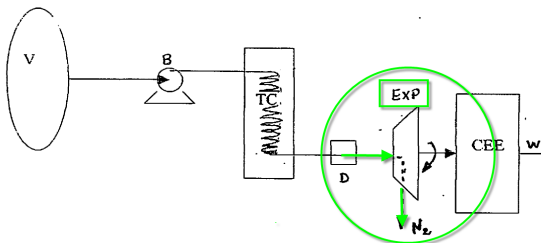

F17C 2227/0365

with recovery of heat

Definition statement

This place covers:

Method or means for cooling fluid, the cooling potential being recovered for later reuse.

F17C 2227/0367

Localisation of heat exchange

Definition statement

This place covers:

Thermal exchange with the fluid, including heating and cooling, the thermal exchange taking place at particular locations.

Special rules of classification

Simple heat loss though vessel wall, without any particular device is not classified in this group or its sub-groups.

F17C 2227/0369

in or on a vessel

Definition statement

This place covers:

Thermal exchange with the fluid, the exchange taking place in or on the pressure vessel.

In this positive example form EP1167862, the heating device is mounted in or on the vessel.

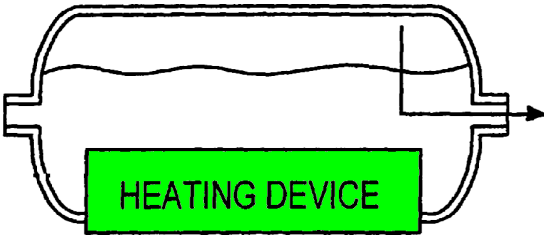

F17C 2227/0372

in the gas

Definition statement

This place covers:

Thermal exchange located in the gas phase of the fluid in the pressure vessel.

In this positive example from DE19720451, a heater is mounted in the gas phase.

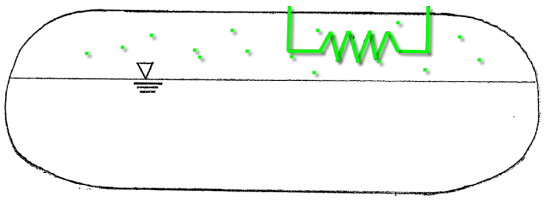

F17C 2227/0374

in the liquid

Definition statement

This place covers:

Thermal exchange located in the liquid phase of the fluid in the pressure vessel.

In this positive example from DE19544593, a heating exchange device is located in the liquid phase.

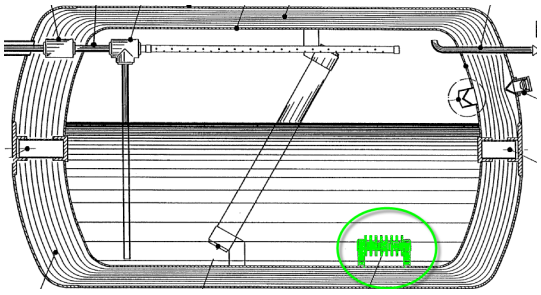

F17C 2227/0376

in wall contact

Definition statement

This place covers:

Thermal exchange with the fluid in the pressure vessel, the thermal exchange device being in contact with the vessel wall.

F17C 2227/0379

inside the vessel

Definition statement

This place covers:

Thermal exchange with the fluid in the pressure vessel, the thermal exchange device being located inside the vessel.

In this positive example from EP2103863, the heat exchange device is distributed all over the spherical inner wall surface.

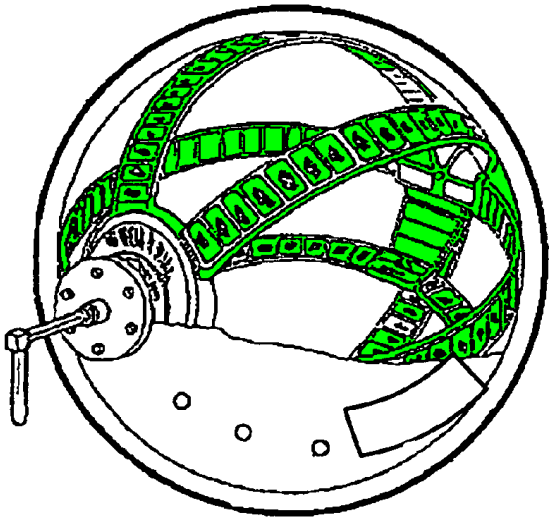

F17C 2227/0381

integrated in the wall

Definition statement

This place covers:

Thermal exchange with the fluid in the pressure vessel, the thermal exchange device being integrated in the wall of the vessel.

In this positive example from WO9612521, the heat exchange device is mounted inside the wall of the vessel.

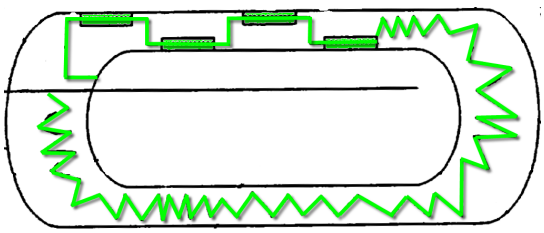

F17C 2227/0383

outside the vessel

Definition statement

This place covers:

Thermal exchange with the fluid in the pressure vessel, the thermal exchange device not being in contact with the vessel.

In this positive example from US2002124575, the heat source is located below the vessel.

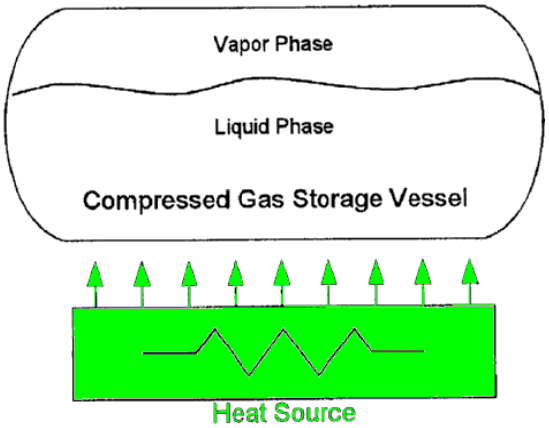

F17C 2227/0386

with a jacket

Definition statement

This place covers:

Thermal exchange with the fluid in the pressure vessel, the thermal exchange device being in form of a dismountable jacket.

In this positive example from FR2897413, the jacket covers the upper part of the vessel.

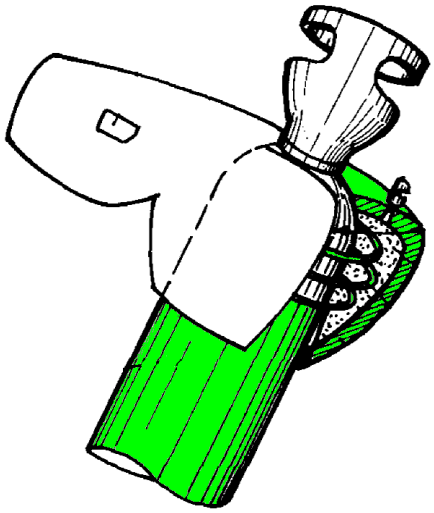

F17C 2227/0388

separate

Definition statement

This place covers:

Thermal exchange with the fluid, including heating or cooling, the thermal exchange taking place at a location remote from the pressure vessel.

F17C 2227/039

on the pipes

Definition statement

This place covers:

Thermal exchange with the fluid, the thermal exchange taking place on pipes.

In this positive example from DE102005049252, the pipe is heated.

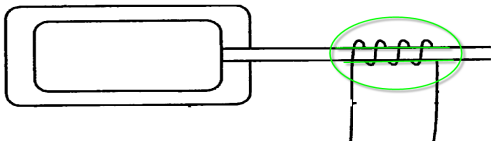

F17C 2227/0393

using a vaporiser

Definition statement

This place covers:

Thermal exchange with the fluid, the thermal exchange being vaporization and taking place in a vaporizer.

In this positive example from US6598408, LNG is vaporized in a vaporizer.

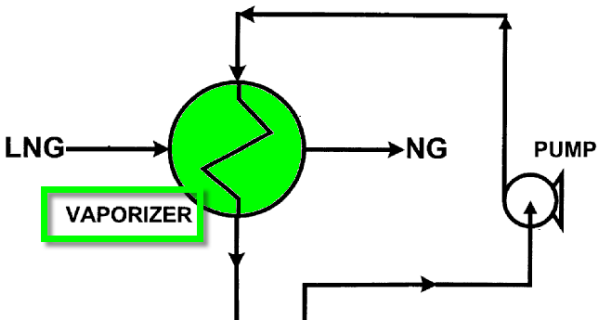

In this positive example from WO03012277, the vaporizer is a compact unit.

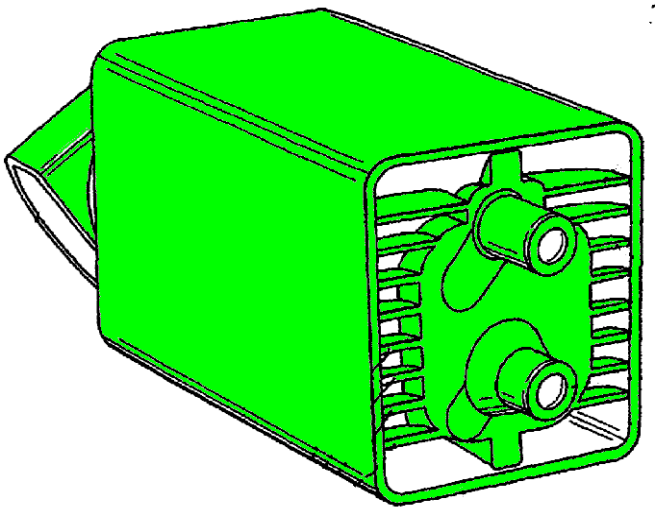

F17C 2227/0395

using a submerged heat exchanger

Definition statement

This place covers:

Thermal exchange with the fluid, the thermal exchange taking place in a submerged a heat exchanger.

In this positive example from US2006288711, seawater vaporizes the LNG.

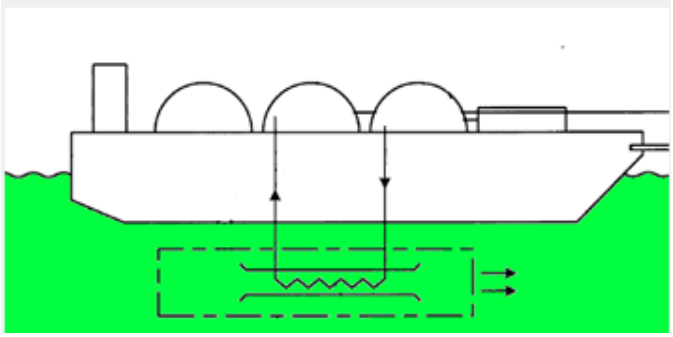

In this negative example from WO2004081441, there is no heat exchanger, but direct heat exchange between seawater and vessel.

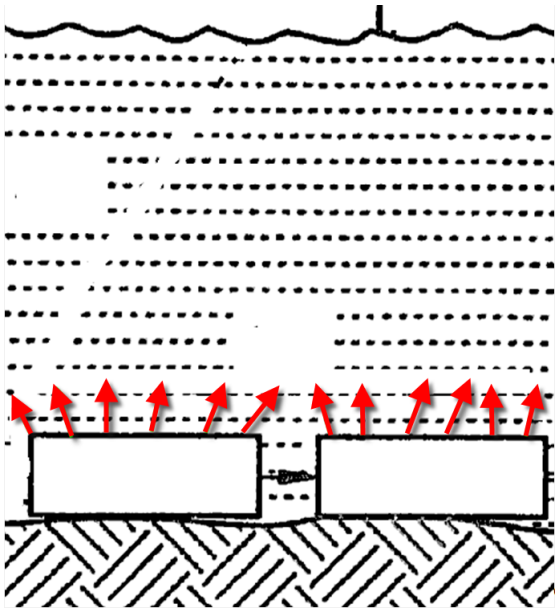

F17C 2227/0397

characterised by fins

Definition statement

This place covers:

Thermal exchange with the fluid, the thermal exchange process being supported by fins or rips.

In this positive example from US4598554, fins surround an vaporizer.

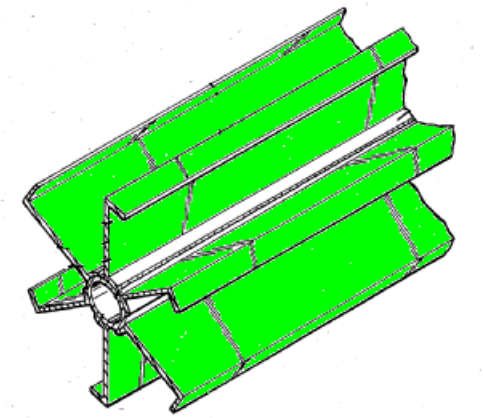

Special rules of classification

Fins or rips to improve strength of the structure without evidence that they increase heat transfer, are not classified here.

Synonyms and Keywords

In patent documents, the following words/expressions are often used as synonyms:

- “fins” and “rips"

F17C 2227/04

Methods for emptying or filling

Definition statement

This place covers:

Method for filling or emptying pressure vessels.

In this negative example from DE748096, a particular alignment of vessels is disclosed (arrangement in series). This does not allow a conclusion how the filling or emptying takes place.

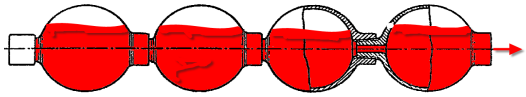

Special rules of classification

When the valve of a pressurized vessel is opened, fluid flows by pressure difference out of the vessel. This standard emptying of a pressure vessel is not classified, unless additional features make the method more specific.

A particular arrangement of vessels, like a serial one, or an arrangement in parallel, is not sufficient to classify here: the way of filling or emptying must be detailed.

F17C 2227/041

vessel by vessel

Definition statement

This place covers:

Method for filling or emptying pressure vessels, the method comprising the filling or emptying of one vessel after another, instead of several vessels at the same time.

In this positive example from FR2874247, vessels are filled one by one.

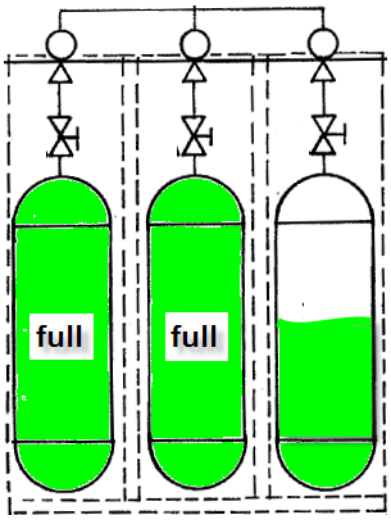

In this negative example from US2006150640, salt caverns empty simultaneously.

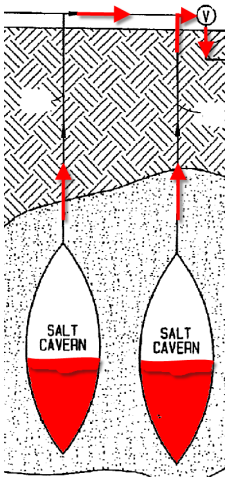

F17C 2227/042

with change-over from one vessel to another

Definition statement

This place covers:

Method for filling or emptying pressure vessels, the method comprising details about a switch-over from a first vessel or group of vessels, to a second vessel or group of vessels, once the filling or emptying of the first vessel or group of vessels is achieved.

In this positive example from FR2857728, a change-over from an emptied vessel to a spare vessel is described.

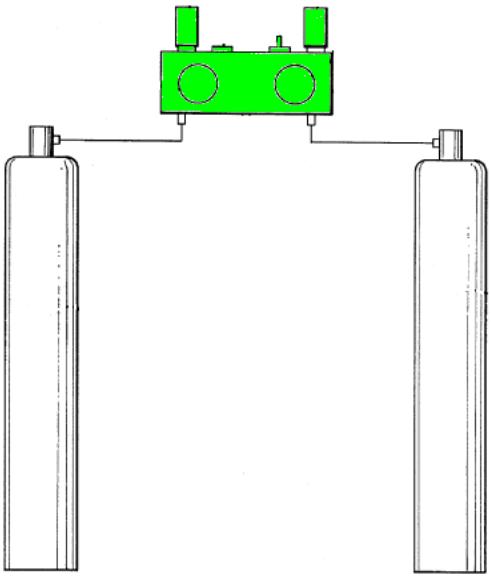

F17C 2227/043

by pressure cascade

Definition statement

This place covers:

Method for filling a pressure vessel with gas by pressure cascade, i.e. from a group of pressure vessels at a different pressure levels each, the filling starting from the vessel at the lowest pressure and ending with the vessel at the highest pressure, so as to systematically obtain gas transfer by pressure difference, with the lowest pressure drop possible.

In this positive example from US2009229701, the filling is of cascade type.

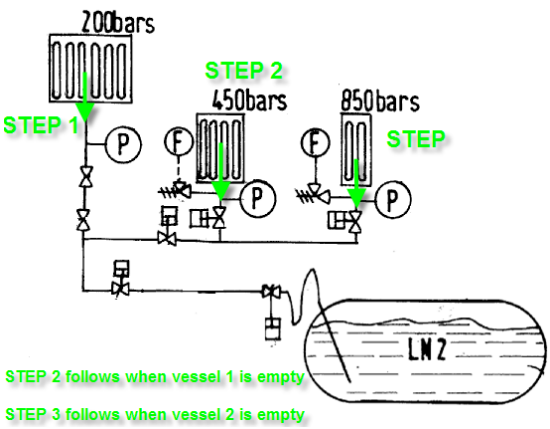

F17C 2227/044

by purging

Definition statement

This place covers:

Method for emptying a pressure vessel or pipes, that includes a step of purging, i.e. washing out residual gas by an inert gas

In this positive example from EP0916891, inert gas replaces residual gas.

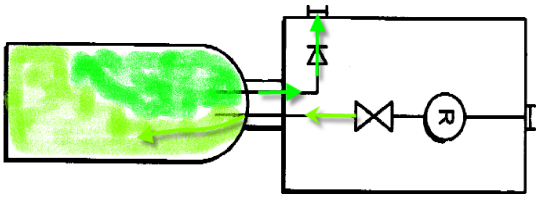

References

Informative references

Attention is drawn to the following places, which may be of interest for search:

Cleaning emptying or filling with liquids bottles, jars, cans, barrels	B64C

Special rules of classification

To be classified here, the intention of purging should be explicit. Replacing a gas by another is not sufficient.

Synonyms and Keywords

In patent documents, the word/expression in the first column is often used instead of the word/ expression in the second column, which is used in the classification scheme of this place:

“wash" “inerting” and “inertizing"	“purge”

F17C 2227/045

by vacuum

Definition statement

This place covers:

Method for emptying a pressure vessel or pipes, that includes a step of evacuating at vacuum level, e.g. with a venturi or vacuum pump, so as to get rid of residual gas.

In this positive example from US2005204752, evacuation and inert gas purging are used in cycles.

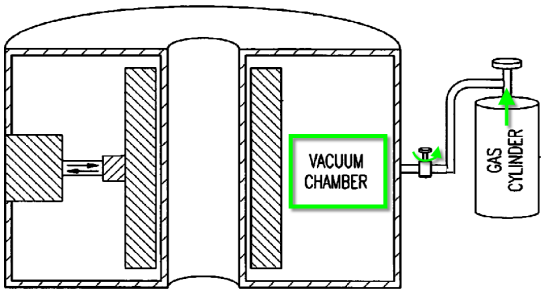

F17C 2227/046

by even emptying or filling

Definition statement

This place covers:

Method for filling or emptying pressure vessels, the method allowing to fill or empty several vessels in parallel.

In this positive example from WO03016765, liquefied gas vessels are evenly emptied.

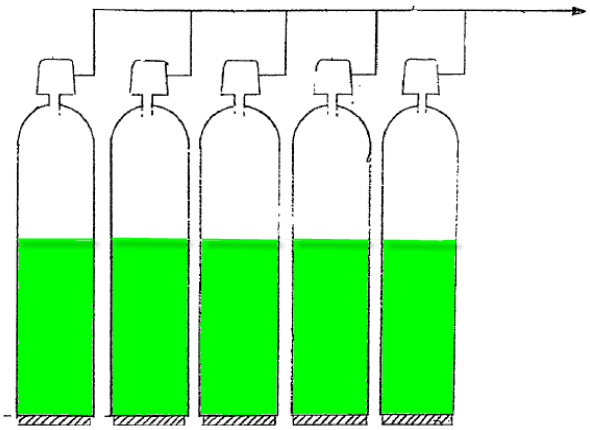

F17C 2227/047

by repeating a process cycle

Definition statement

This place covers:

Method for filling or emptying pressure vessels, the method comprising a step that is sequentially repeated in a process cycle until the filling or emptying is achieved.

In this positive example from DE10247505, the transfer takes sequentially place by small quantities.

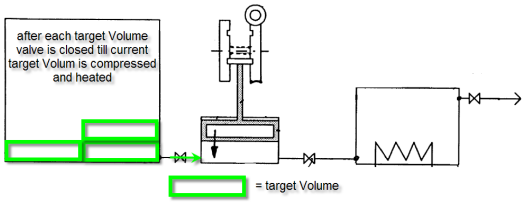

F17C 2227/048

by maintaining residual pressure

Definition statement

This place covers:

Method for emptying a pressure vessel that includes the intentional remainder of a residual pressure in the vessel, which usually prevents the introduction of impurities into the vessel.

In this positive example from EP1400742, a residual pressure valve (RPV) is mounted on the vessel.

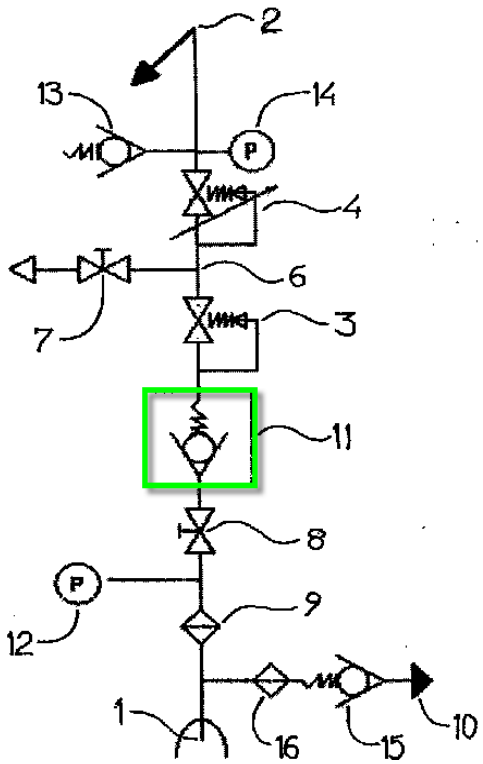

Synonyms and Keywords

In patent documents, the following abbreviations are often used:

RPV	residual pressure valve

F17C 2250/00

Accessories; Control means; Indicating, measuring or monitoring of parameters

Definition statement

This place covers:

Means and accessories supporting the gas storage or the handling of gas in and out of a pressure vessel, or pressure vessels as such, in particular means to control, to indicate and to measure and monitor parameters like temperature, pressure etc...

F17C 2250/01

Intermediate tanks

Definition statement

This place covers:

Intermediate tank situated between a source storage tank and distribution means to a user, the intermediate tank allowing e.g. to individually process smaller buffer quantities of fluid from the storage tank fluid before distributing it.

In this positive example from EP1353112, the intermediate tank is used for the distribution of carbon dioxide

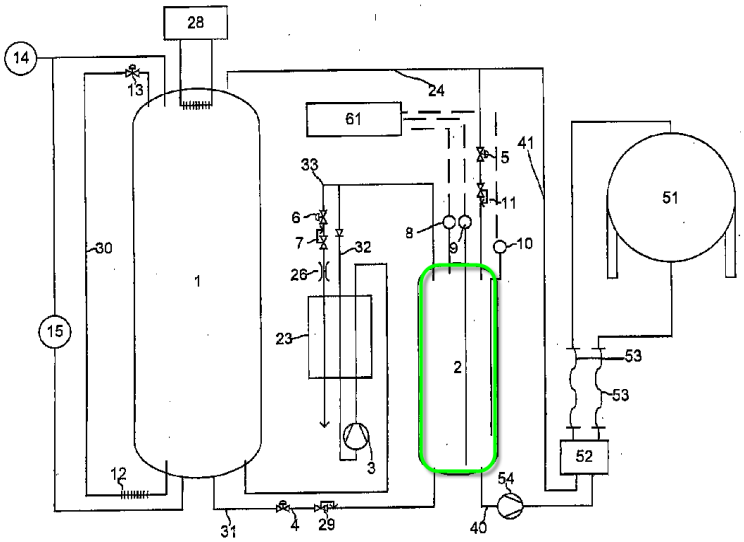

In this negative example from DE10021681, the fluid is directly processed from the storage tank.

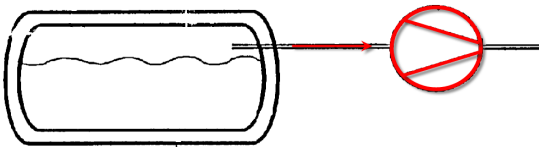

References

Informative references

Attention is drawn to the following places, which may be of interest for search:

Transfer of fluids, i.e. method for emptying or filling	F17C 2227/04

F17C 2250/03

Control means

Definition statement

This place covers:

Means for controlling, the gas storage or handling in and out of a pressure vessel, or the pressure vessel.

F17C 2250/032

using computers

Definition statement

This place covers:

Means for controlling, the means comprising a computer.

In this positive example from GB2440692, a PC is displayed.

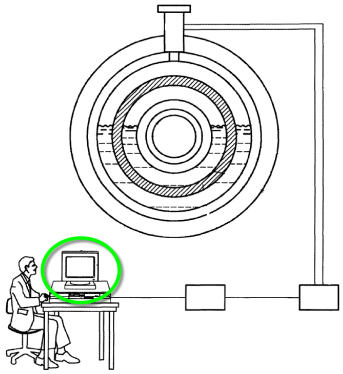

In this positive example from US2002148502, the words CPU, ROM and RAM are visible.

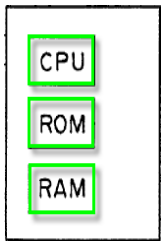

Special rules of classification

The use of a PC, a notebook, a CPU or a chip are sufficient to justify a classification in this group.

Synonyms and Keywords

In patent documents, the following words/expressions are often used with the meaning indicated:

"PC", “notebook”, “CPU”, “processor”, “central unit”, “chip”, “notepad”, “ROM”, and "RAM"	“using computers”.

F17C 2250/034

using wireless transmissions

Definition statement

This place covers:

Means for controlling, the means comprising a wireless transmission or data.

In this positive example from US2009050630, a networks manages fuel cell vehicles.

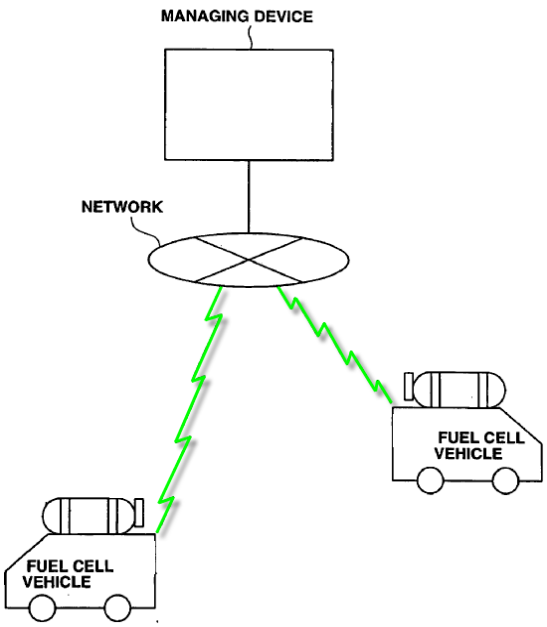

F17C 2250/036

using alarms

Definition statement

This place covers:

Means for controlling, the means triggering an alarm at predefined events. The alarm can be any of any type: visual, acoustic, by odor etc...The triggering event can be of any type as well.

In this positive example from WO9323117, an alarms system is mounted on a pipe.

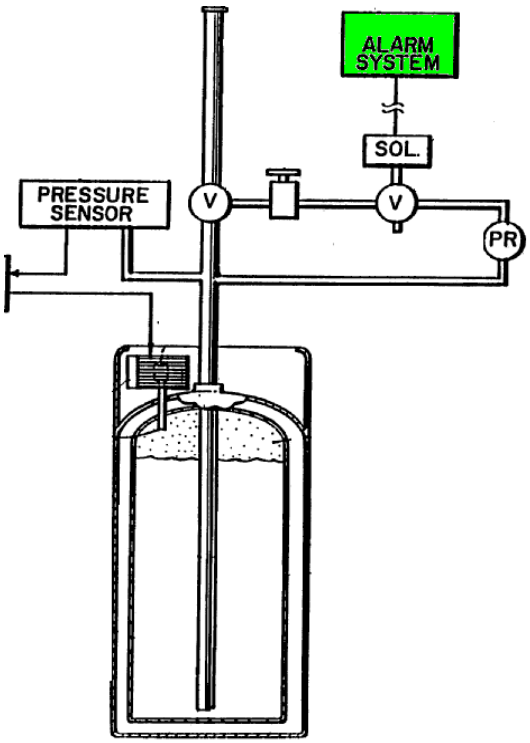

References

Informative references

Attention is drawn to the following places, which may be of interest for search:

Signaling or calling systems, Alarm systems	G08B

F17C 2250/038

using cameras

Definition statement

This place covers:

Means for controlling, the means comprising a camera.

In this positive example from WO2011104736, an control camera is used.

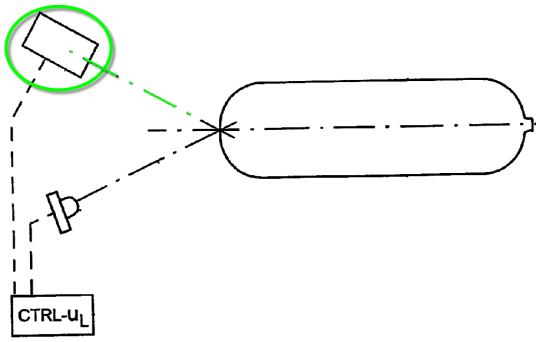

F17C 2250/04

Indicating or measuring of parameters as input values

Definition statement

This place covers:

Means and accessories supporting the gas storage or handling in and out of a pressure vessel, or the pressure vessel, the means dedicated to indicate, measure and monitor parameters like temperature, pressure etc.

References

Informative references

Attention is drawn to the following places, which may be of interest for search:

Sampling, preparing specimen for investigation	G01N 1/00
Analyzing materials by measuring the pressure or volume of a gas or vapor	G01N 7/00
Investigating density	G01N 9/00
Investigating flow properties of materials, e.g. viscosity	G01N 11/00
Measuring magnetic variables also including MRI systems	G01R 33/00
Control of viscosity	G05D 24/00

Special rules of classification

If constraints are used to indicate pressure, put document into constraints (measured parameter) and pressure (indicated parameter) and in F17C 2250/0495 "Measured and indicated parameter not identical"

F17C 2250/0404

Parameters indicated or measured

Definition statement

This place covers:

Parameters indicated or measured by means supporting the gas storage and handling in and out of a pressure vessel.¨

The parameters do not need to be measured directly in or on the pressure vessel.

Special rules of classification

It is not important if a parameter is indicated or measured, as some parameters are indicated as a result of other measured parameters. E.g. a density can be indicated on a display, and be the result of a calculation based on a measured temperature. E.g. a constraint on the vessel wall can be converted into the pressure inside the vessel. In such cases, both, the indicated and the measured parameter are classed in their relevant classes, and the document is additionally classed into F17C 2250/0495 "Measured and indicated parameter not identical".

Some parameters, like the level of content, concern the pressure vessel only, others, like pressure or temperature, can be measured anywhere in a process.

F17C 2250/0408

Level of content in the vessel

Definition statement

This place covers:

Indication or measurement of the level of content in the vessel, like e.g. by using transparent vessel wall, or a spyhole...

References

Informative references

Attention is drawn to the following places, which may be of interest for search:

Indicating or measuring liquid level	G01F 23/00

F17C 2250/0413

with floats

Definition statement

This place covers:

Indication or measurement of the level of content in the vessel, by using a float.

In this positive example from EP1318347, the float is mounted in a portable vessel.

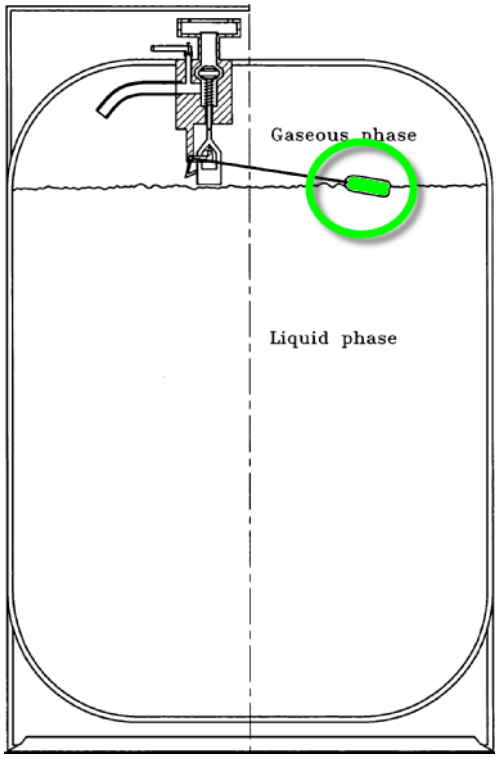

F17C 2250/0417

with electrical means

Definition statement

This place covers:

Indication or measurement of the level of content in the vessel, by using an electrical device.

In this positive example from WO9940553, a sensor is mounted in the vessel.

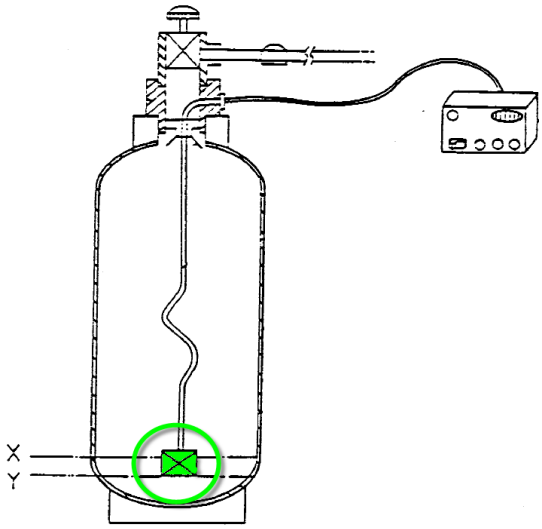

F17C 2250/0421

Mass or weight of the content of the vessel

Definition statement

This place covers:

Indication or measurement of mass of fluid.

In this positive example from FR2865018, the whole vessel is weighted.

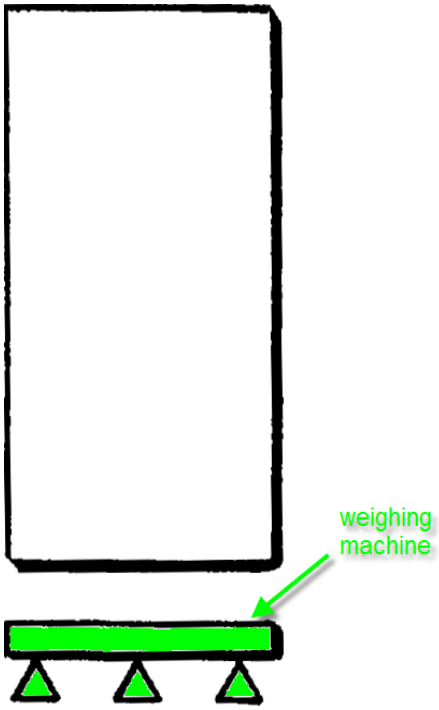

References

Informative references

Attention is drawn to the following places, which may be of interest for search:

Weighing apparatus	G01G

F17C 2250/0426

Volume

Definition statement

This place covers:

Indication or measurement of volume of fluid.

References

Informative references

Attention is drawn to the following places, which may be of interest for search:

Measuring the volume	G01F

F17C 2250/043

Pressure

Definition statement

This place covers:

Indication or measurement of pressure, e.g. by a pressure gauge

In this positive example from WO9323117, the pressure is measured by a sensor.

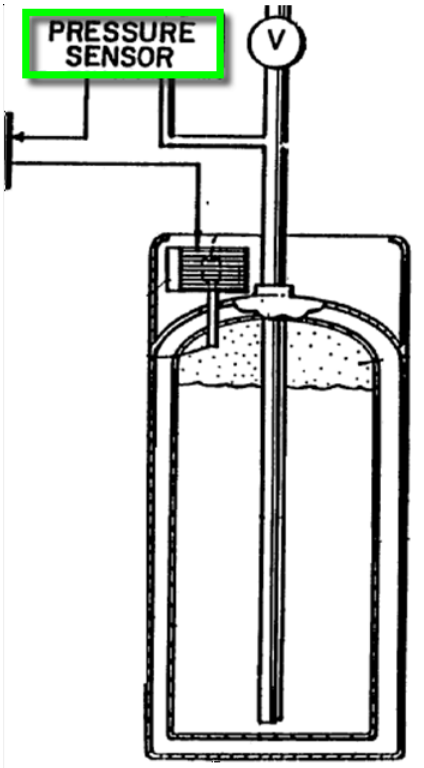

References

Informative references

Attention is drawn to the following places, which may be of interest for search:

Measuring pressure of a fluid	G01L 7/00- G01L 23/00 and G01L 27/00

F17C 2250/0434

Pressure difference

Definition statement

This place covers:

Indication or measurement of a pressure difference, i.e. the difference of pressure between two points of measure.

In this positive example from WO9118266, pressure is measured in the liquid and the gas.

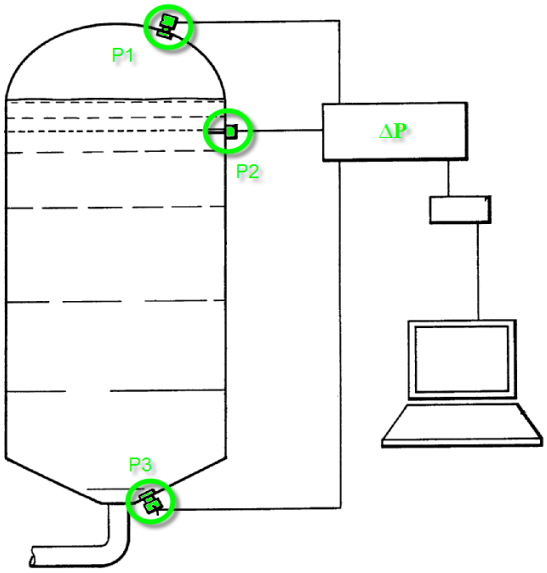

Special rules of classification

The simple pressure difference between a measured pressure and the atmospheric pressure (indicated by "bar g or psi g") does not justify classification in this group.

F17C 2250/0439

Temperature

Definition statement

This place covers:

Indication or measurement of temperature.

In this positive example from US2002124575, a temperature sensor is shown.

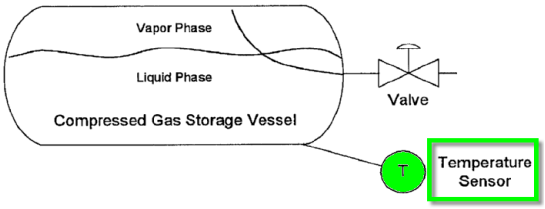

References

Informative references

Attention is drawn to the following places, which may be of interest for search:

Measuring temperature	G01K

F17C 2250/0443

Flow or movement of content

Definition statement

This place covers:

Indication or measurement of flow or movement of fluid.

In this positive example from US5333465, a flow meter is used.

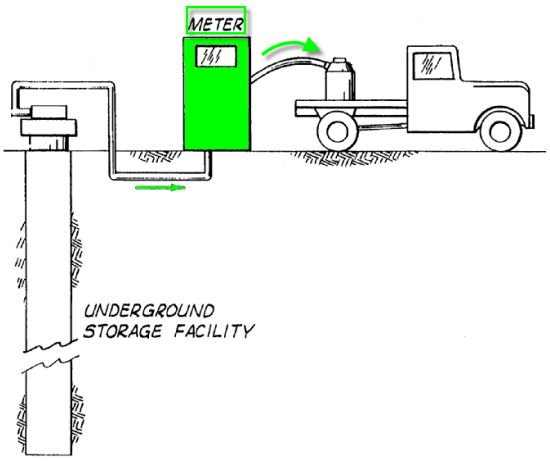

Special rules of classification

Opening a valve is not considered an indication of flow.

F17C 2250/0447

Composition; Humidity

Definition statement

This place covers:

Indication or measurement of composition.

F17C 2250/0452

Concentration of a product

Definition statement

This place covers:

Indication or measurement of a concentration within the fluid, like in % vol.

F17C 2250/0456

Calorific or heating value

Definition statement

This place covers:

Indication or measurement of calorific or heating value, like indicated by the Wobbe index.

F17C 2250/046

Humidity

Definition statement

This place covers:

Indication or measurement of moisture.

In this positive example from EP0271483, a moisture indicator is attached to the closing cap of the gas vessel.

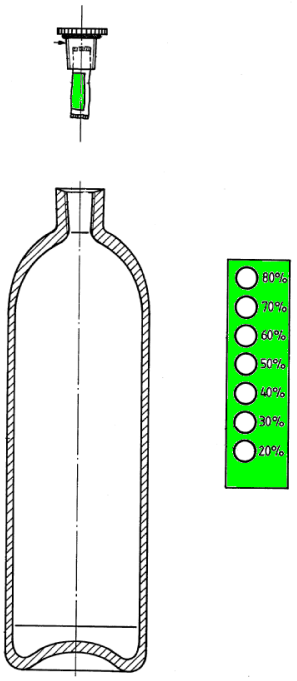

F17C 2250/0465

Vibrations, e.g. of acoustic type

Definition statement

This place covers:

Indication or measurement of vibrations.

In this positive example from US2008104969, an acoustic sensors allows to monitor the fluid level.

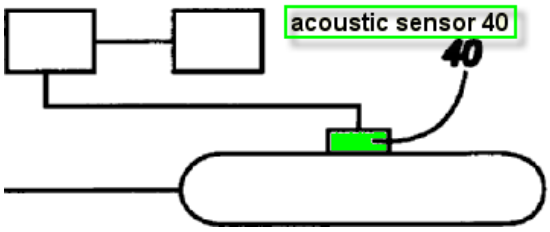

References

Informative references

Attention is drawn to the following places, which may be of interest for search:

Measuring vibrations	G01H

F17C 2250/0469

Constraints, e.g. by gauges

Definition statement

This place covers:

Indication or measurement of constraints, e.g. strain.

In this positive example from DE10154145, constraint gauges are mounted on the vessel.

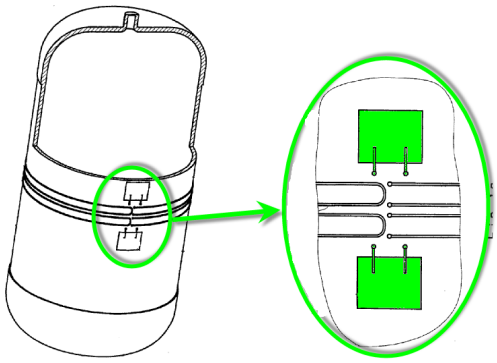

References

Informative references

Attention is drawn to the following places, which may be of interest for search:

Measuring force or stress in general	G01L 1/00

F17C 2250/0473

Time or time periods

Definition statement

This place covers:

Indication or measurement of time or time periods.

In this positive example from US2008150739, time remaining before the vessel is empty is displayed.

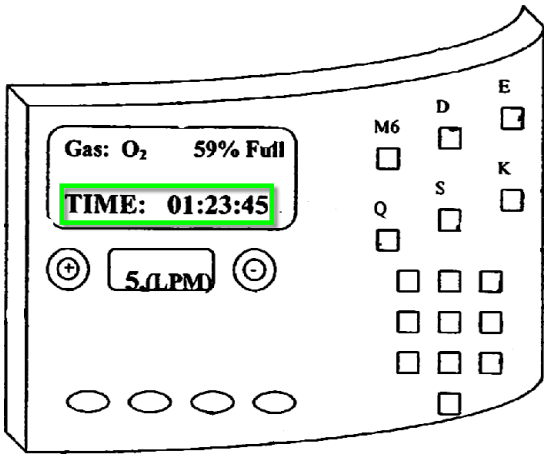

Special rules of classification

Indication of time of the day, like on a clock, does not justify classification herein.

F17C 2250/0478

Position or presence

Definition statement

This place covers:

Indication or measurement of the position or of the presence of items, like e.g. the correct attachment of a dispensing pistol.

In this positive example from US2010192695, the presence of vessels is monitored.

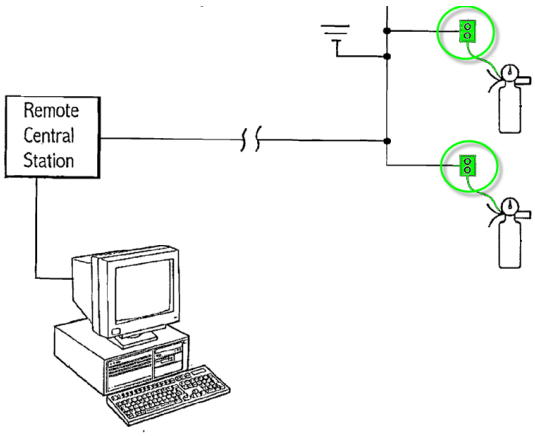

References

Informative references

Attention is drawn to the following places, which may be of interest for search:

Indicating or recording presence, absence, or direction, of movement	G01P 13/00

F17C 2250/0482

Acceleration

Definition statement

This place covers:

Indication or measurement of an acceleration.

In this positive example from US2009050630, an acceleration sensor is connected to a controller.

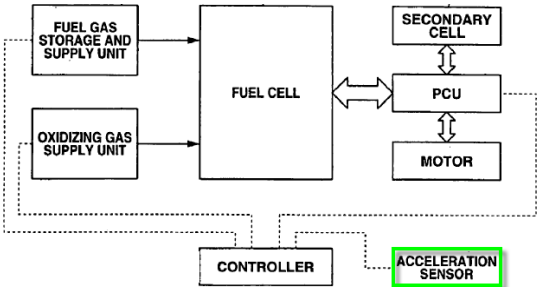

References

Informative references

Attention is drawn to the following places, which may be of interest for search:

Measuring acceleration	G01P 15/00

F17C 2250/0486

Indicating or measuring characterised by the location

Definition statement

This place covers:

Particular locations for measuring parameters.

F17C 2250/0491

Parameters measured at or inside the vessel

Definition statement

This place covers:

Particular location for measuring parameters, the location being at or inside the vessel.

F17C 2250/0495

the indicated parameter is a converted measured parameter

Definition statement

This place covers:

Particular situation when the measured parameter is converted into another parameter that is then displayed.

Special rules of classification

When a parameter is indicated as a result of other measured parameters, e.g. a density indicated on a display is calculated from a measured temperature, both, the indicated and the measured parameter, are classified in their relevant classes, and the document is additionally classified herein.

F17C 2250/04A10

Moisture

Definition statement

This place covers:

Indication or measurement of moisture.

In this positive example from EP0271483, a moisture indicator is attached to the closing cap of the gas vessel.

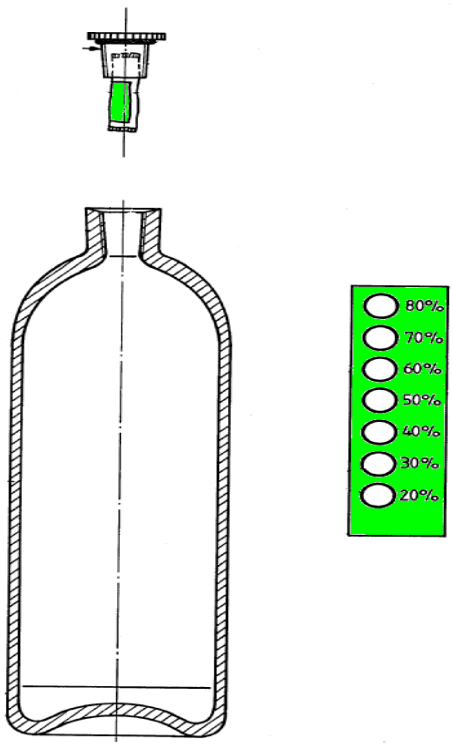

F17C 2250/06

Controlling or regulating of parameters as output values

Definition statement

This place covers:

Means and accessories supporting the gas storage or handling in and out of a pressure vessel, or a pressure vessel, in particular to regulate a parameter, in the sense of reaching and maintaining a set point.

F17C 2250/0605

Parameters

Definition statement

This place covers:

Regulated parameters, for which a set point to be reached and maintained is fixed.

F17C 2250/061

Level of content in the vessel

Definition statement

This place covers:

Regulation of the level of content in the vessel.

In this positive example from WO9103679, the level fluid is to be maintained.

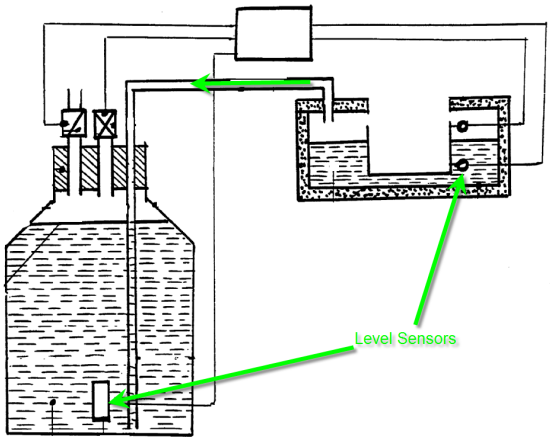

References

Informative references

Attention is drawn to the following places, which may be of interest for search:

Level control, e.g. controlling quantity of material stored in vessel	G05D 9/00

F17C 2250/0615

Mass or weight of the content of the vessel

Definition statement

This place covers:

Regulation of the mass of fluid, like with a mass flow regulator.

F17C 2250/0621

Volume

Definition statement

This place covers:

Regulation of the volume of fluid.

F17C 2250/0626

Pressure

Definition statement

This place covers:

Regulation of the pressure of fluid.

References

Informative references

Attention is drawn to the following places, which may be of interest for search:

Control of fluid pressure	G05D 16/00

F17C 2250/0631

Temperature

Definition statement

This place covers:

Regulation of the temperature of fluid.

In this positive example from US2002124575, a certain temperature is maintained.

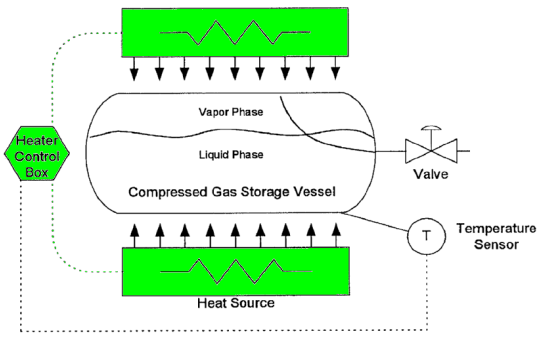

References

Informative references

Attention is drawn to the following places, which may be of interest for search:

Control of temperature	G05D 23/00

F17C 2250/0636

Flow or movement of content

Definition statement

This place covers:

Regulation of the flow of fluid.

In this positive example from GB2062205, a certain flow is maintained with a bypass.

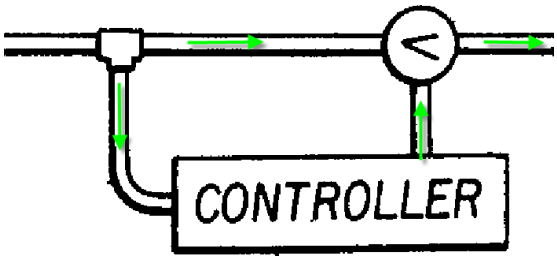

References

Informative references

Attention is drawn to the following places, which may be of interest for search:

Control of flow	G05D 7/00

F17C 2250/0642

Composition; Humidity

Definition statement

This place covers:

Regulation measurement of composition.

In this positive example from US4023617, the composition is regulated.

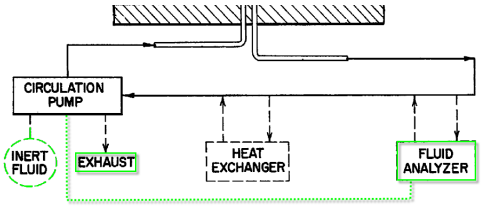

F17C 2250/0647

Concentration of a product

Definition statement

This place covers:

Regulation of a concentration within the fluid, like in % vol.

F17C 2250/0652

Calorific or heating value

Definition statement

This place covers:

Regulation of calorific or heating value, like indicated by the Wobbe index.

F17C 2250/0657

Humidity

Definition statement

This place covers:

Regulation of moisture.

In this positive example from EP0271483, a moisture indicator is attached to the closing cap of the gas vessel.

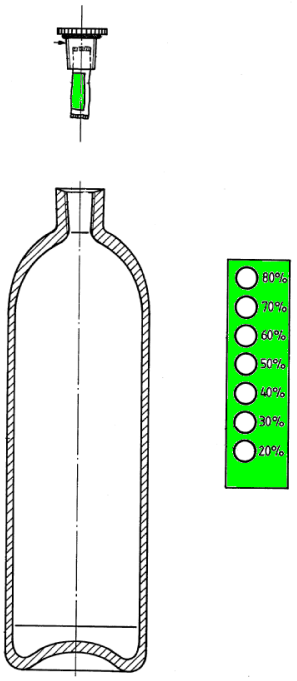

References

Informative references

Attention is drawn to the following places, which may be of interest for search:

Control of humidity	G05D 22/00

F17C 2250/0663

Vibrations, e.g. of acoustic type

Definition statement

This place covers:

Regulation of vibrations.

F17C 2250/0668

Constraints, e.g. by jauges

Definition statement

This place covers:

Regulation of constraints, e.g. strain.

F17C 2250/0673

Time or time periods

Definition statement

This place covers:

Regulation of time or time periods.

F17C 2250/0678

Position or presence

Definition statement

This place covers:

Regulation of localisation of items.

F17C 2250/0684

Acceleration

Definition statement

This place covers:

Regulation of acceleration.

References

Informative references

Attention is drawn to the following places, which may be of interest for search:

Control of acceleration or deceleration	G05D 13/00

F17C 2250/0689

Methods for controlling or regulating

Definition statement

This place covers:

Particular methods for regulating.

F17C 2250/0694

with calculations

Definition statement

This place covers:

Methods for regulating for which the algorithm or formulae on which the regulation is based, are disclosed.

F17C 2250/07

Actions triggered by measured parameters

Definition statement

This place covers:

Particular actions triggered by parameters.

F17C 2250/072

Action when predefined value is reached

Definition statement

This place covers:

Particular actions triggered when a particular value of a parameter is reached, e.g. an alarms starts, a connection is established etc...

Special rules of classification

Any type of action can be considered, not only alarms.

F17C 2250/075

when full

Definition statement

This place covers:

Particular actions triggered in the moment the pressure vessel is full.

In this positive example from EP1318347, the valve closes when the vessel is filled.

F17C 2250/077

when empty

Definition statement

This place covers:

Particular actions triggered in the moment the pressure vessel is empty.

F17C 2260/00

Purposes of gas storage and gas handling

Definition statement

This place covers:

Purposes in relation with gas storage and gas handling, that are intended to be achieved by the technical features disclosed.

Special rules of classification

The classification criteria in this group and its sub-groups are not technical features, but purposes. Various solutions which attend to achieve the same purpose are grouped. From this grouping, prior art achieving the same purpose, i.e. solving the same problem, can be found. These documents may be of interest when assessing inventive activity,

As a consequence, the "purpose" of an invention must not be guessed or imagined, but needs to be explicitly mentioned in the document. Example: if a pressure vessel is made of aluminium, one may imagine a weight reduction is aimed at. But aluminum can be chosen for other reasons, like corrosion or formability. The purpose "reducing weight" should only be classified if this purpose is actually mentioned in the text.

Basic or vague purposes, like "cheaper", "more efficient", "less complex" or "better", are to be not considered.

Purposes can be hidden in a negative formulation, e.g. when the disadvantages or inconvenient aspects of prior art is quoted.

The number of purposes per document should be limited in to maximum 2-4 per document.

When prior art (e.g. in form of patent numbers, summaries or drawings about prior art) is mentioned in a document, its technical features are NOT considered for classification. On the other hand, purposes mentioned in relation with prior art, are usually also valid for the whole document, and not only for the prior art. These purposes can thus be classified for the whole document.

F17C 2260/01

Improving mechanical properties or manufacturing

Definition statement

This place covers:

Purposes to be achieved by the technical features disclosed, these purposes being in relation with mechanical properties or with the manufacturing of pressure vessels

F17C 2260/011

Improving strength

Definition statement

This place covers:

Purpose consisting in improving strength, stability, mechanical resistance of the device.

In this positive example from US4925044, an additional layer allows to "improve the mechanical strength of the tank"" (in the text).

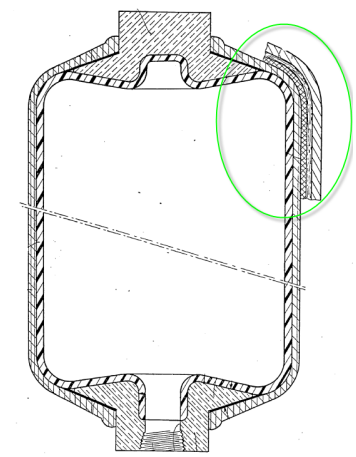

F17C 2260/012

Reducing weight

Definition statement

This place covers:

Purpose consisting in reducing the weight of the device.

In this positive example from US2280501, "It is an object ...to provide a... container...in which the ...weight ...is a minimum" (in the text).

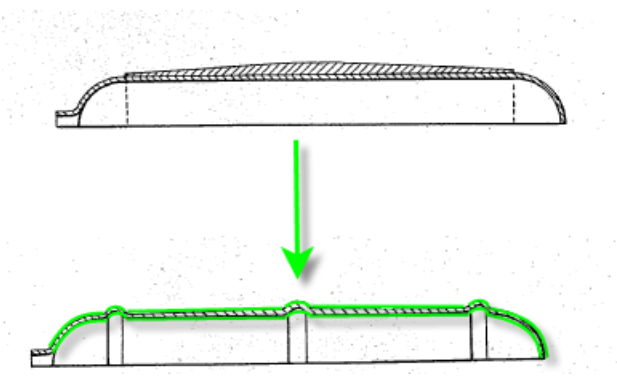

F17C 2260/013

Reducing manufacturing time or effort

Definition statement

This place covers:

Purpose consisting in facilitating the manufacturing of the device so as to reduce the manufacturing time or effort.

In this positive example from EP1520683, the objective " shortening the manufacturing time" (in the text) is achieved.

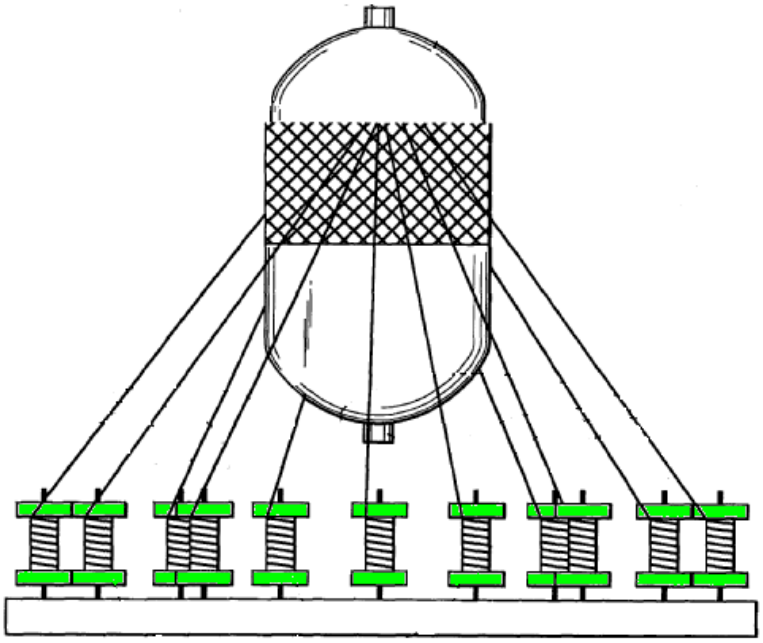

F17C 2260/015

Facilitating maintenance

Definition statement

This place covers:

Purpose consisting in facilitating or simplifying the maintenance of the device.

F17C 2260/016

Preventing slosh

Definition statement

This place covers:

Purpose consisting in reducing or preventing slosh in the pressure vessel.

In this positive example from US2922287, baffles are mounted "to prevent sloshing" (in the text).

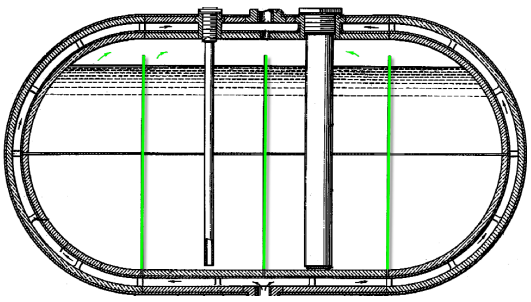

References

Informative references

Attention is drawn to the following places, which may be of interest for search:

Content retaining means	B65D 90/004
Anti-slosh devices	B65D 90/52

Glossary of terms

In this place, the following terms or expressions are used with the meaning indicated:

Slosh	Movement of a liquid, in particular of the free surface of a liquid inside a vessel undergoing motion, like on a ship or in a plane. The liquid, also in motion, can damage or alter the vessel.

Synonyms and Keywords

In patent documents, the following words/expressions are often used as synonyms:

- "slosh" and "swash"

In patent documents, the following words/expressions are often used with the meaning indicated:

"damp"	“slosh”.

F17C 2260/017

by calculation

Definition statement

This place covers:

Purposes achieved in relation with mechanical properties or with manufacturing by applying formulae or calculations.

In this positive example from GB1008317, a formula defines the wall thickness.

a) $s/l = 18.2 \cdot \frac{\sigma s}{E} - 0.2 \cdot s/r$

In this negative example from XP000486893, a chemical formula is disclosed.

$$CaCO_3 + CO_2 + H_2O \Leftrightarrow Ca^{2+} + 2HCO_3^-, \quad K_3 = \frac{[Ca^{2+}][HCO_3^-]^2}{[CO_2]}.$$

Special rules of classification

The presence of calculation or formulae of any kind and related to mechanical aspects, justify a classification in this group.

Chemical formulae of components or chemical reactions, are not classified herein.

F17C 2260/018

Adapting dimensions

Definition statement

This place covers:

Purpose consisting in being able to insert the pressure vessel in an restricted location with a specific geometry, like a car backseat, or a spare wheel compartment.

In this positive example from EP1584859, the vessel is mounted on a car, the shape is for a "better integration" (in the text).

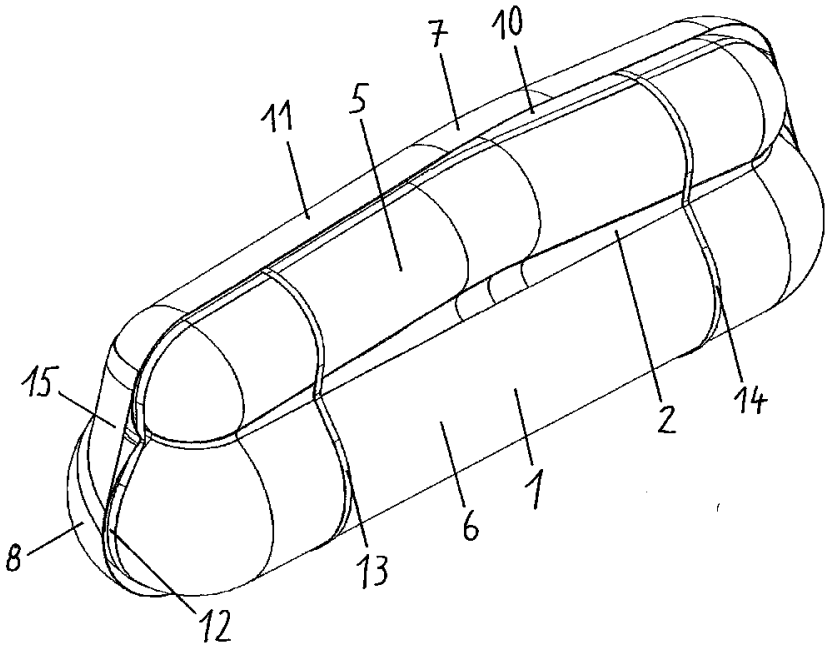

F17C 2260/02

Improving properties related to fluid or fluid transfer

Definition statement

This place covers:

Purposes to be achieved by the technical features disclosed, these purposes being in relation with the fluid or the fluid transfer.

F17C 2260/021

Avoiding over pressurising

Definition statement

This place covers:

Purpose consisting in avoiding a too high pressure inside the pressure vessel.

In this positive example from GB1167296, a space for swelling is foreseen in the bottom "in the case of accidental overpressure" (in the text).

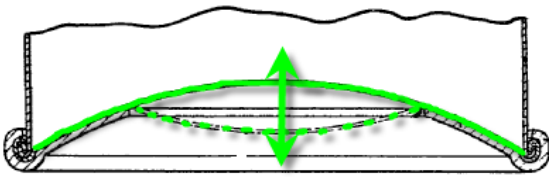

Special rules of classification

Pressure relieve valves, though they avoid overpressurising, are not classified herein, but into F17C 2205/0332.

F17C 2260/022

Avoiding overfilling

Definition statement

This place covers:

Purpose consisting in avoiding overfilling of the pressure vessel.

In this positive example from EP1318347, a device foreseen "to prevent it from being filled beyond a given limit" (in the text).

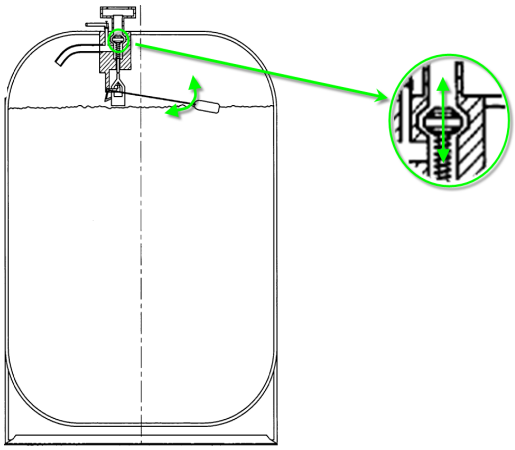

F17C 2260/023

Avoiding overheating

Definition statement

This place covers:

Purpose consisting in avoiding overheating.

In this positive example from US20070000561, surplus heat is evacuated from the vessel "to avoid heat build up " (in the text).

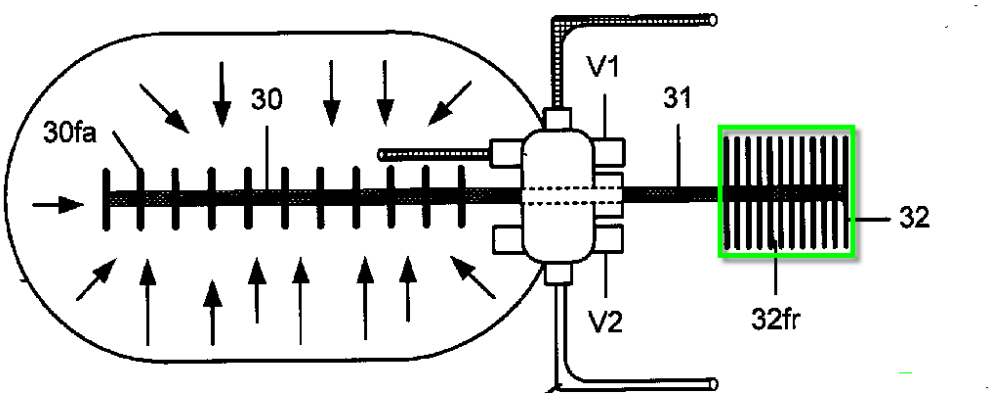

F17C 2260/024

Improving metering

Definition statement

This place covers:

Purpose consisting in improving the metering, i.e. the transfer of a precise dosage of fluid.

In this positive example from US5131440, nitrogen is dispensed on food, with the requirement "to provide a predetermined volume of liquid gas" (in the text).

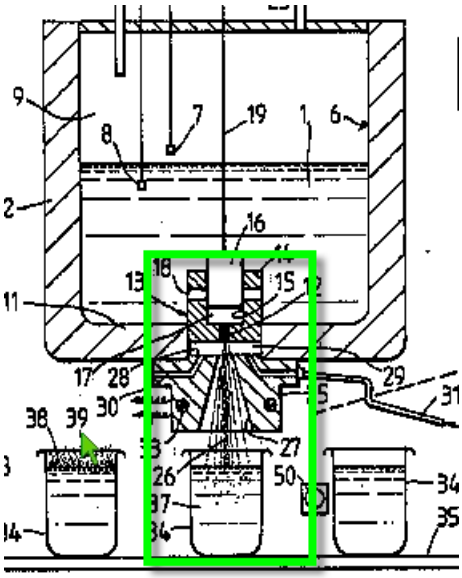

Special rules of classification

Improving the measuring accuracy is not sufficient for classification herein.

F17C 2260/025

Reducing transfer time

Definition statement

This place covers:

Purpose consisting in shortening duration for transferring fluid from or to a vessel, e.g. when refuelling vehicles with liquefied hydrogen.

In this positive example from EP1726869, a heat evacuation system is foreseen to reduce "the time required to refill onboard tanks" (in the text).

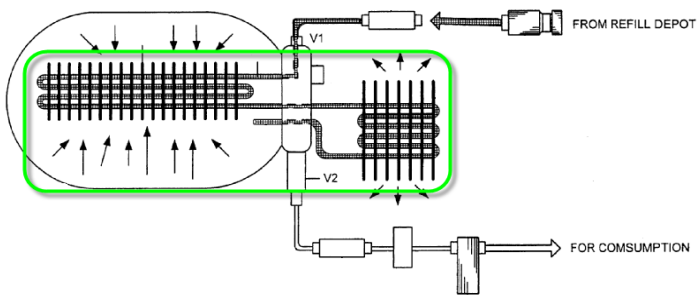

F17C 2260/026

by calculation

Definition statement

This place covers:

Purpose achieved in relation with the fluid or fluid transfer by applying formulae or calculations.

In this positive example from XP002302219, heat transfer is calculated

$$\left.\begin{aligned} \frac{\alpha_i \cdot \chi}{\lambda} &= \frac{40 : 0{,}01}{200} = 0{,}002 \\ \left(\frac{\alpha_i}{\lambda}\right)^2 a \cdot Z &= \left(\frac{40}{200}\right)^2 \cdot 10^{-4} \cdot Z = 4 \cdot 10^{-6} \cdot Z \\ \frac{\Delta T_{wa}}{T_{Ga} - T_{S1}} &= 0{,}85 \end{aligned}\right\} \quad \begin{aligned} 4 \cdot 10^{-6} \cdot Z &= 4 \cdot 10^{-4} \\ Z &= 100 \text{ sec} \end{aligned}$$

In this negative example from XP000486893, a chemical formula is disclosed.

$$CaCO_3 + CO_2 + H_2O \Leftrightarrow Ca^{2+} + 2HCO_3^-, \quad K_3 = \frac{[Ca^{2+}][HCO_3^-]^2}{[CO_2]}.$$

F17C 2260/027

Making transfer independent of vessel orientation

Definition statement

This place covers:

Purpose consisting in making the fluid transfer independent from the changing orientation of the vessel, e.g. in planes or satellites.

In this positive example from DE19910894, liquefied gas can be discharged even if the vessel is upside down, thus overcoming the prior art disadvantage that liquid can only be discharged with a "particular orientation of the vessel" (in the text).

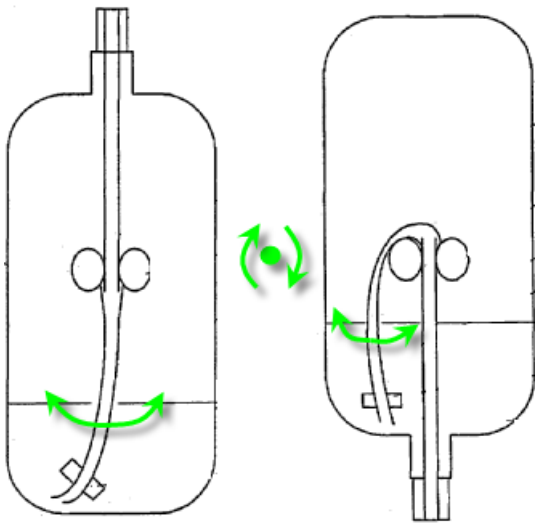

In this positive example from US5279323, traps are foreseen to withdraw liquefied gas so as to be "operable under low-gravity conditions" (in the text)

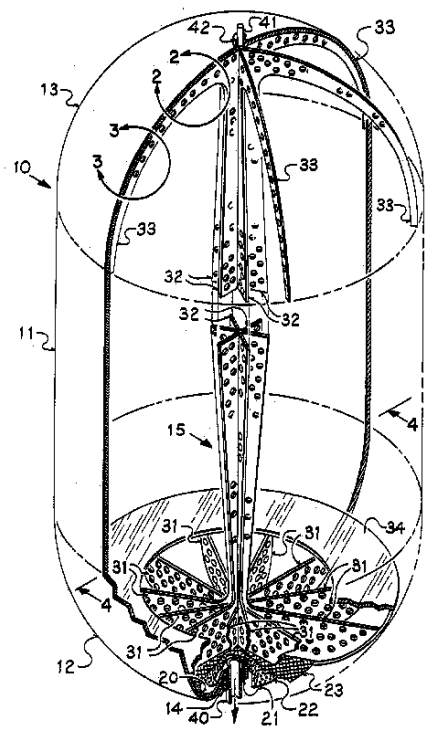

F17C 2260/028

Avoiding unauthorised transfer

Definition statement

This place covers:

Purpose consisting in making fluid transfer only possible for authorised persons.

In this positive example from WO03044426, a connector between a gas control valve and a gas meter is designed with the requirement of "preventing illegal use of public utility gas" (in the text).

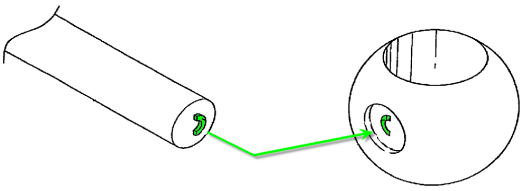

F17C 2260/03

Dealing with losses

Definition statement

This place covers:

Purpose to be achieved by the technical features disclosed, the purpose being in relation with losses.

F17C 2260/031

due to heat transfer

Definition statement

This place covers:

Purpose in relation with losses due to heat transfer.

In this positive example from WO03018344, heat transfer into the tank "generally unwanted" (in the text).

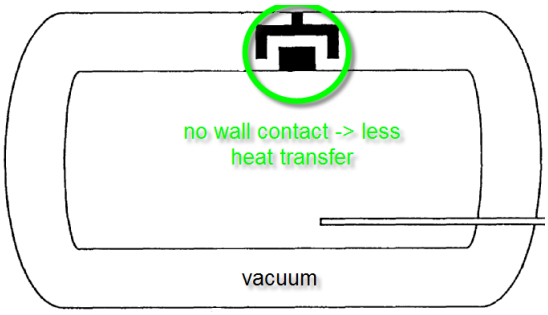

F17C 2260/032

Avoiding freezing or defrosting

Definition statement

This place covers:

Purpose consisting in avoiding ice formation on or removing ice from pipes, valves or vessels.

F17C 2260/033

by enhancing insulation

Definition statement

This place covers:

Purpose consisting in avoiding heat loss by enhancing thermal insulation.

In this positive example from US4835975, thermal insulation reduces heat transfer on a trailer.

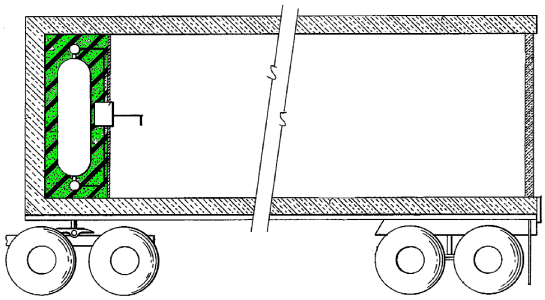

F17C 2260/035

of fluid

Definition statement

This place covers:

Purpose in relation with losses of transferred or stored fluid.

References

Informative references

Attention is drawn to the following places, which may be of interest for search:

Removing gases or liquids enclosed in discarded articles, e.g. aerosol cans	B09B 2220/02
Investigating fluid-tightness of structures	G01M 3/00

Synonyms and Keywords

In patent documents, the following words/expressions are often used as synonyms:

- "loss" and “leak”

In patent documents, the word/expression in the first column is often used instead of the word/ expression in the second column, which is used in the classification scheme of this place:

"seal"	“loss”

F17C 2260/036

Avoiding leaks

Definition statement

This place covers:

Purposes in relation with losses of transferred or stored fluid, the solution being to avoid fluid leaks, e.g. by O-rings.

In this positive example from EP2325543, an oxide layer is formed on the inner face of a resin layer to "ensure gas barrier properties of the tank" (in the text).

F17C 2260/037

Handling leaked fluid

Definition statement

This place covers:

Purposes in relation with losses of transferred or stored fluid, the solution being to handle the leaked fluid.

In this positive example from GB830171, an conduit extracts leaked fluid, "the loss of fluid being much less great" (in the text).

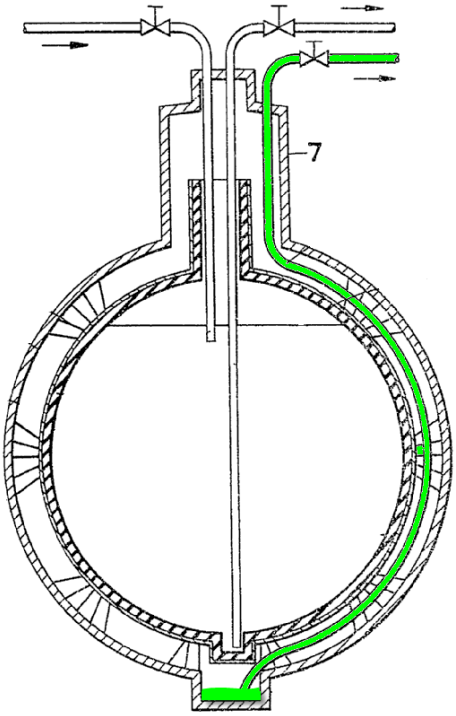

F17C 2260/038

Detecting leaked fluid

Definition statement

This place covers:

Purposes in relation with losses of transferred or stored fluid, the solution detecting leaks.

In this positive example from EP1037269, a leak detector is mounted inside the box.

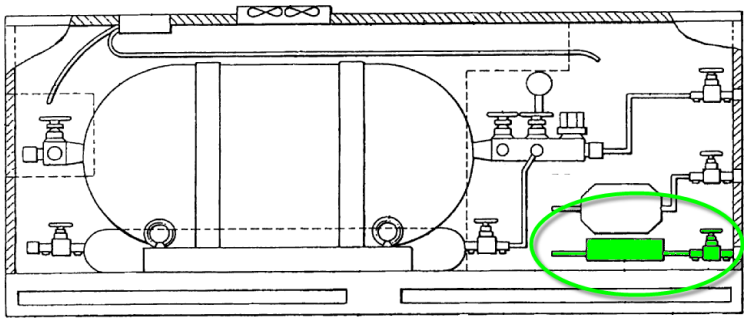

F17C 2260/04

Reducing risks and environmental impact

Definition statement

This place covers:

Purposes to be achieved by the technical features disclosed, these purposes consisting in protecting the environment.

F17C 2260/042

Reducing risk of explosion

Definition statement

This place covers:

Purpose consisting in reducing the risks of explosion or limiting the effects of bursting of vessels.

In this positive example from GB2399052, air pressurizes low pressure oxygen on demand "for its safe storage" (in the text).

F17C 2260/044

Avoiding pollution or contamination

Definition statement

This place covers:

Purpose consisting in reducing the risks of explosion or limiting the effects of bursting of vessels.

In this positive example from GB2399052, air pressurizes low pressure oxygen on demand "for its safe storage" (in the text).

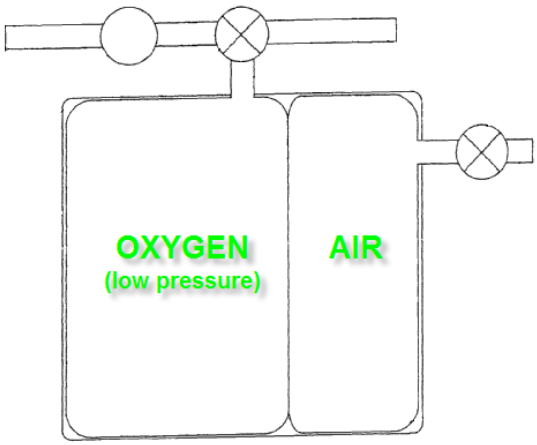

F17C 2260/046

Enhancing energy recovery

Definition statement

This place covers:

Purpose consisting in increasing the energy recovery.

F17C 2260/048

Refurbishing

Definition statement

This place covers:

Purpose consisting in simplifying the refurbishing of the pressure vessel, e.g. washing it, repairing it, so as to reuse it.

References

Informative references

Attention is drawn to the following places, which may be of interest for search:

Removing gases or liquids enclosed in discarded articles, e.g. aerosol cans	B09B 2220/02

F17C 2260/05

Improving chemical properties

Definition statement

This place covers:

Purpose consisting in improving chemical properties of the handled fluid.

In the positive example from DE102006045031, methanol or/and ethanol is added to natural gas to reduce its freezing point.

F17C 2260/053

Reducing corrosion

Definition statement

This place covers:

Purpose consisting in reducing corrosion.

In this positive example from EP0565444, the risk of corrosion - "corrosion of the vessel would take place" (in the text) - is reduced by a sacrificial anode.

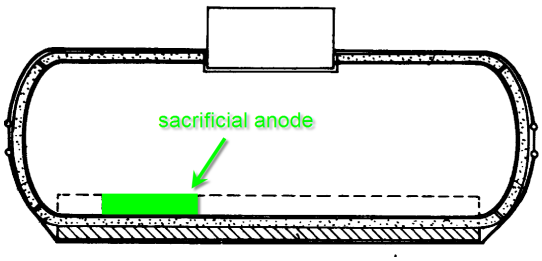

References

Informative references

Attention is drawn to the following places, which may be of interest for search:

Inhibiting corrosion by applying inhibitors to the surface in danger	C23F 11/00

Inhibiting corrosion by anodic or cathodic protection	C23F 13/00

F17C 2260/056

Improving fluid characteristics

Definition statement

This place covers:

Purpose consisting in improving fluid characteristics, like viscosity, calorific value, etc.

F17C 2265/00

Effects achieved by gas storage or gas handling

Definition statement

This place covers:

Effects achieved in relation with gas storage and gas handling.

F17C 2265/01

Purifying the fluid

Definition statement

This place covers:

Effects achieved, the effect being purification of the handled fluid.

F17C 2265/012

by filtering

Definition statement

This place covers:

Purification of the handled fluid by filtering, e.g. by using a filter.

In this positive example from US2424879, a coarse filter is used.

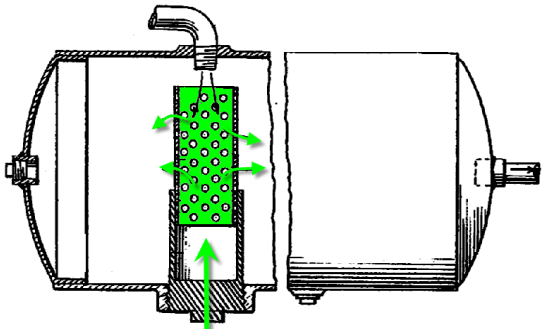

F17C 2265/015

by separating

Definition statement

This place covers:

Purification of the handled fluid by separation.

In this positive example from FR2165729, nitrogen on top is separated from re-liquefied natural gas at the bottom.

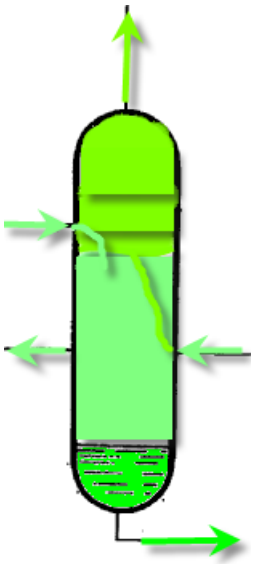

F17C 2265/017

different phases of a same fluid

Definition statement

This place covers:

Purification of the handled fluid by separation of different phases of the same fluid.

In this positive example from FR2165729, liquid and gaseous phases are separated.

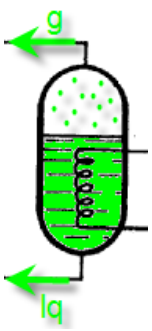

F17C 2265/02

Mixing fluids

Definition statement

This place covers:

Effects achieved, the effect being the mixing of the handled fluid.

References

Informative references

Attention is drawn to the following places, which may be of interest for search:

Mixing, dissolving	B01F
Mixing gases with gases	B01F 3/02
Ratio control	G05D 11/00

F17C 2265/022

identical fluid

Definition statement

This place covers:

Mixing of the handled fluid, by mixing two or more streams of the same fluid, in the same or different phases.

In this positive example from DE4342210, fluid from the bottom of the tank is added to the top.

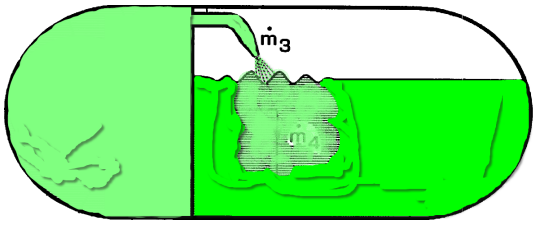

F17C 2265/025

different fluids

Definition statement

This place covers:

Mixing of two different fluids.

In this positive example from EP2236202, oxygen, helium and/or argon are mixed.

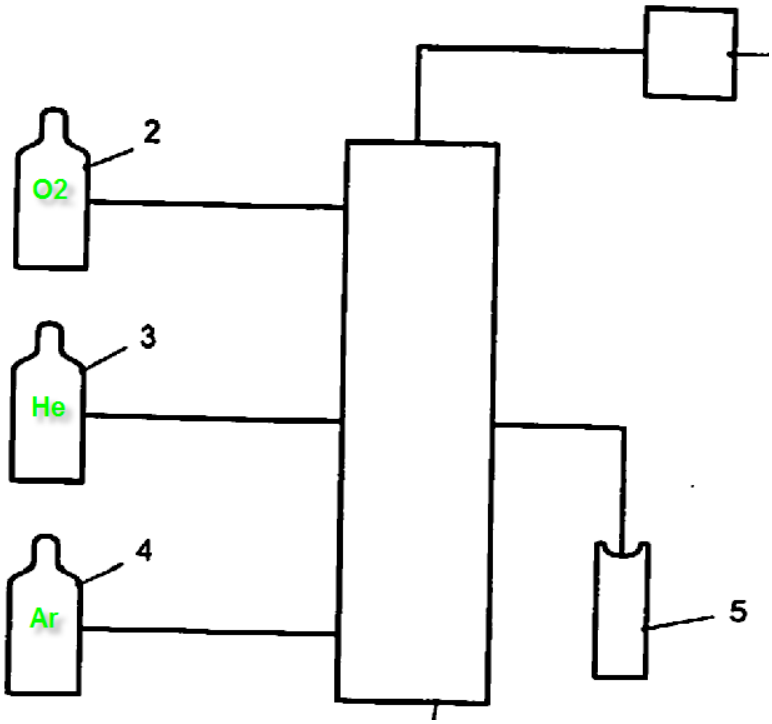

References

Informative references

Attention is drawn to the following places, which may be of interest for search:

Mixing gases with gases	B01F 3/02
Ratio control	G05D 11/00

F17C 2265/027

with odorizing

Definition statement

This place covers:

Mixing of two different fluids, one of the fluids being the handled fluid, the other an odorising additive, allowing to identify scentless fluids.

In this positive example from EP1712831, THT is added to natural gas.

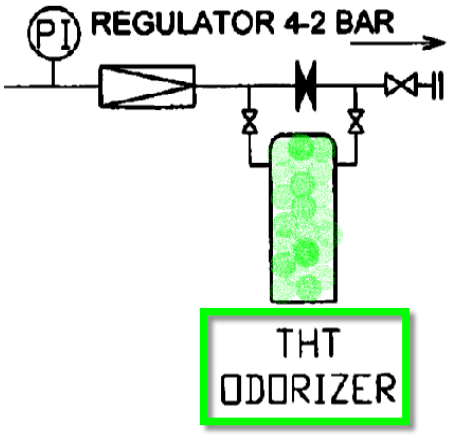

References

Informative references

Attention is drawn to the following places, which may be of interest for search:

Gaseous fuels detectable by the senses	C10L 3/006

F17C 2265/03

Treating the boil-off

Definition statement

This place covers:

Effects achieved, the effect being to treat boil-off of liquefied gas.

In this positive example from DE3245865, boil-off gas is recycled.

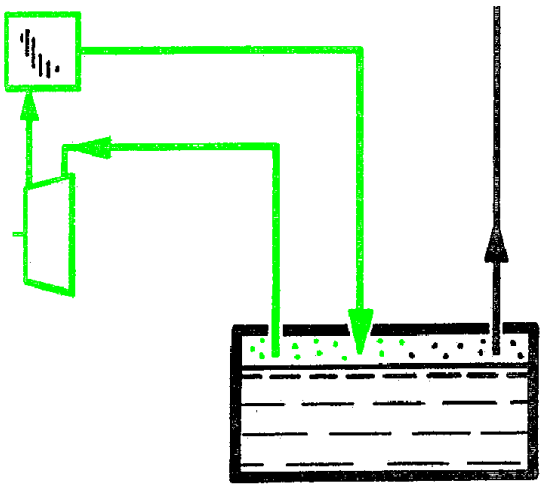

Special rules of classification

Intentionally evaporated liquefied gas, e.g. from regasification units, is not considered to be boil-off, and is not classified herein.

Glossary of terms

In this place, the following terms or expressions are used with the meaning indicated:

Boil-off	Vapour of liquefied gas, evaporating from the free surface of the liquid, due to unintentional heat input into the liquefied gas storage device, and considered as a by-product.

F17C 2265/031

by discharge

Definition statement

This place covers:

Treating boil-off by discharge into the environment, e.g. by flaring.

In this positive example from WO9716678, the BOG is flared.

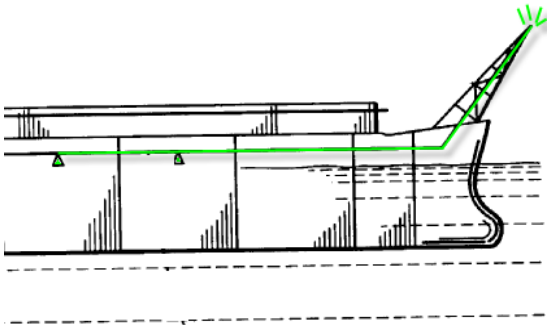

F17C 2265/032

by recovery

Definition statement

This place covers:

Treating boil-off so as to recover or recycle it.

In this positive example from US6382240, the boil-off is reused.

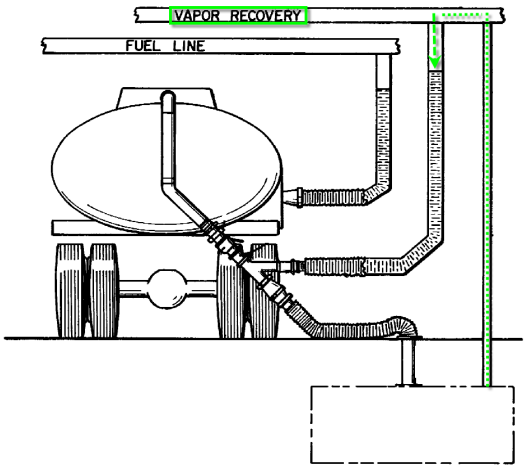

F17C 2265/033

with cooling

Definition statement

This place covers:

Treating boil-off so as to recover or recycle it, the boil-off being cooled.

F17C 2265/034

with condensing the gas phase

Definition statement

This place covers:

Treating boil-off so as to recover or recycle it, the boil-off being cooled and condensed.

In this positive example from DE102010000946, boil-off is cooled and condensed.

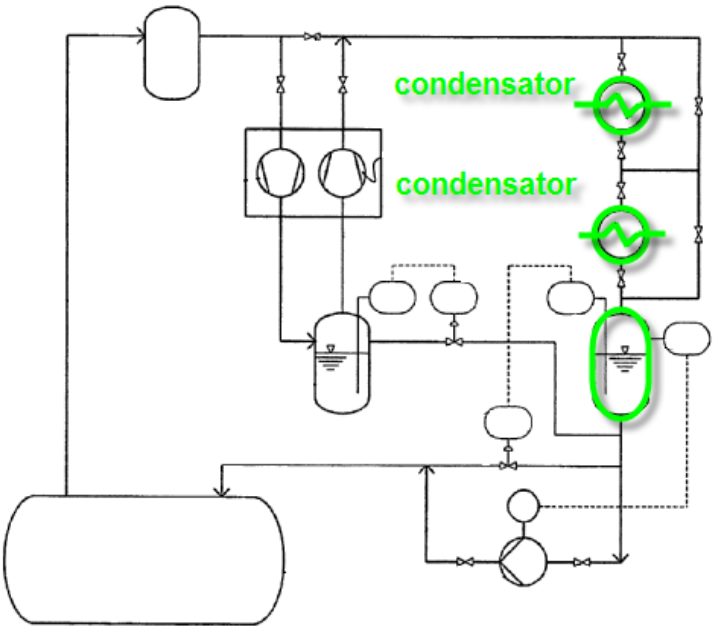

F17C 2265/035

with subcooling the liquid phase

Definition statement

This place covers:

Treating boil-off so as to recover or recycle it, the boil-off being cooled, re-condensed and sub-cooled.

Special rules of classification

If boil-off is avoided by entirely sub-cooling the liquid phase so that no gas boils off, then the document should not be classified herein. Only boil-off gas that has been sub-cooled after recondensation should be classified.

F17C 2265/036

with heating

Definition statement

This place covers:

Treating boil-off so as to recover or recycle it, the boil-off being heated

In this positive example from WO2011061169, the boil-off is heated.

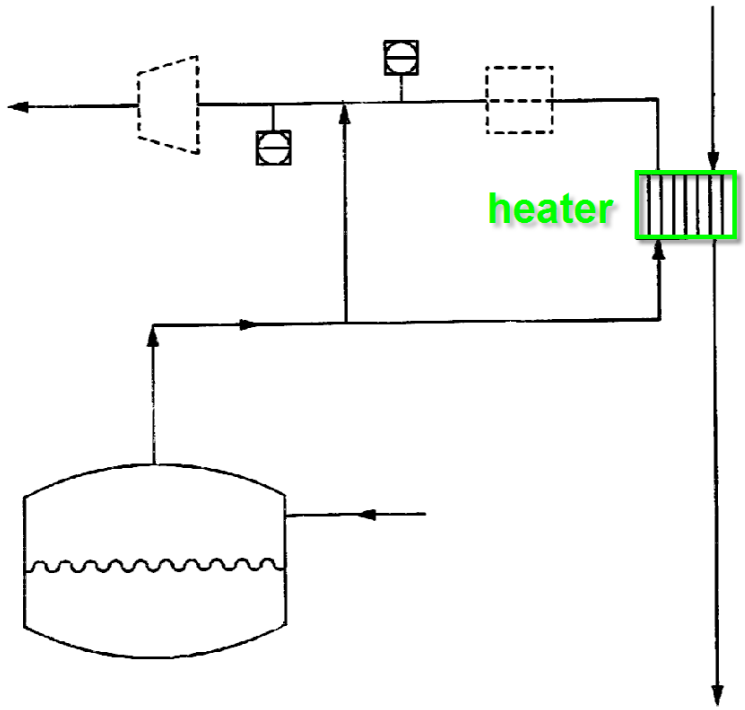

F17C 2265/037

with pressurising

Definition statement

This place covers:

Treating boil-off so as to recover or recycle it, the boil-off being pressurized.

In this positive example from WO2006031634, the boil-off is pressurized.

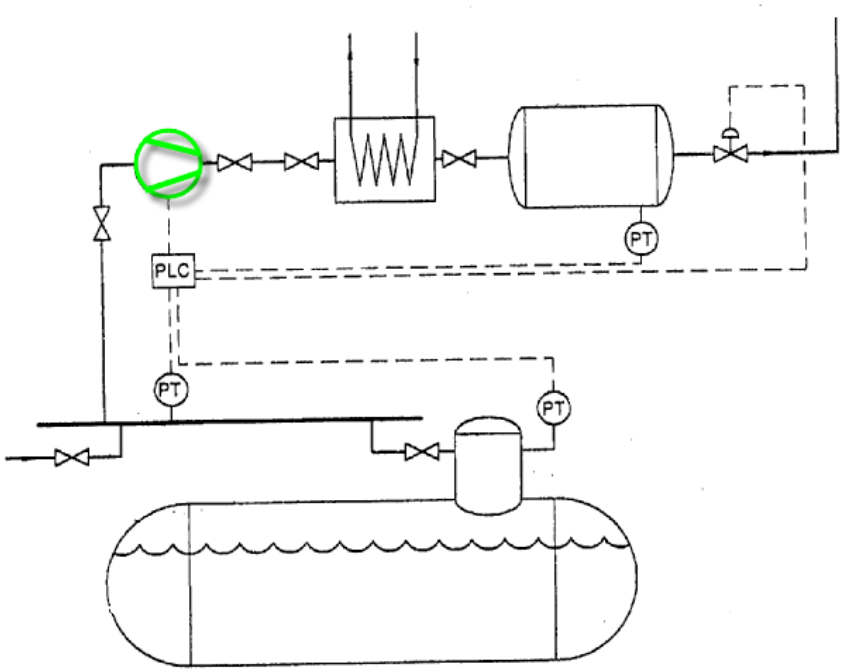

F17C 2265/038

with expanding

Definition statement

This place covers:

Treating boil-off so as to recover or recycle it, the boil-off being expanded.

In this positive example from us2007009369, the boil-off is expanded.

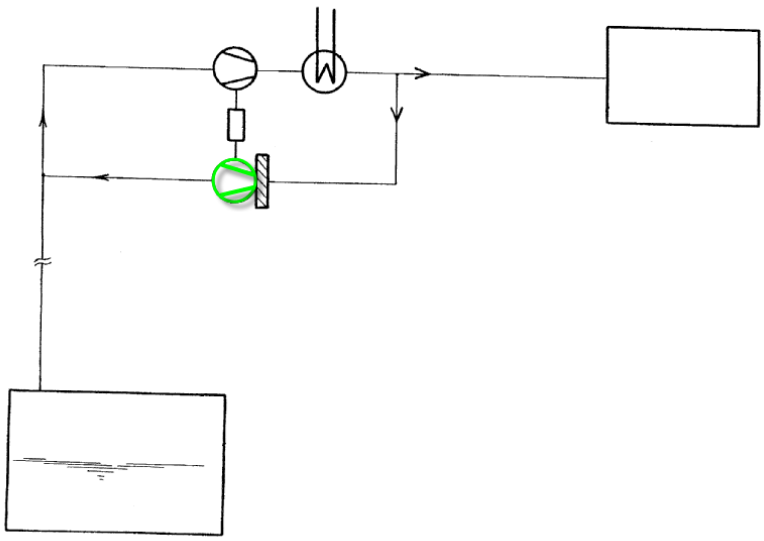

F17C 2265/04

using an independent energy source, e.g. battery

Definition statement

This place covers:

Effects achieved, the effect being independency by using an autonomous energy source, like a battery or a fuel cell.

In this positive example from WO2010038069, an energy source is mounted on a trailer.

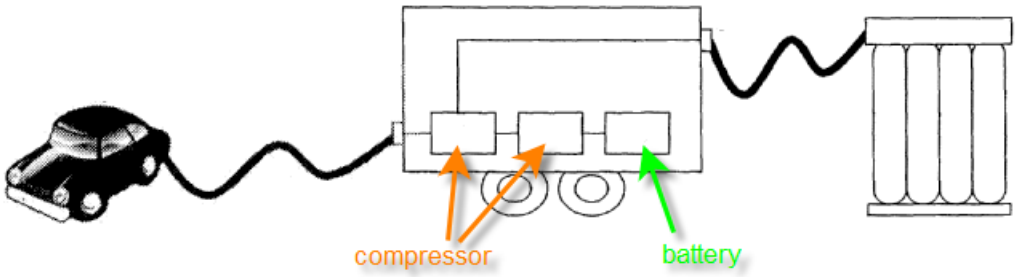

F17C 2265/05

Regasification

Definition statement

This place covers:

Effects achieved, the effect being regasification, i.e. industrial scale vaporisation of liquefied gas, mostly LNG.

In this positive example from US2937504, LNG is vaporized after discharge from a ship.

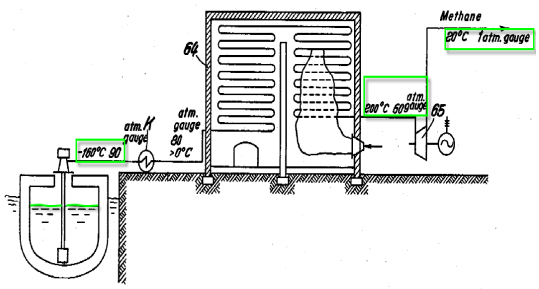

Special rules of classification

Only vaporisation in form of processes at industrial scale are classified herein. Vaporised gases are often fed into pipelines after regasification.

F17C 2265/06

Fluid distribution

Definition statement

This place covers:

Effects achieved, the effect being the fluid distribution, the transport from the production site to the user, or intermediate steps thereof.

References

Informative references

Attention is drawn to the following places, which may be of interest for search:

Apparatus or devices for transferring liquids	**B67D5/00**

F17C 2265/061

for supply of supplying vehicles

Definition statement

This place covers:

Fluid distribution phase from a production or regasification site, starting from very large volumes, e.g. filling of LNG carrier ships at a production site.

In this positive example from US2009115190, liquefied gas is charged on ship at a refinery.

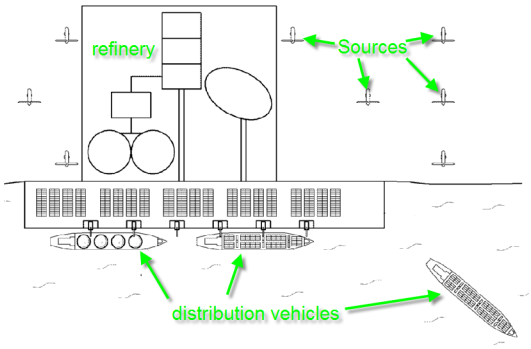

F17C 2265/063

for supply of refueling stations

Definition statement

This place covers:

Fluid distribution phase to a fluid supply station, with large volumes, e.g. from a trailer to a fuel supply station.

In this positive example from FR2896302, the fluid is discharged in a refueling tank above ground.

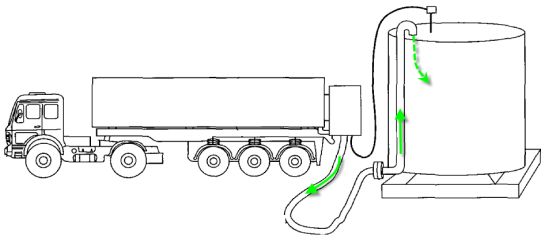

In this positive example from WO2006008299, the fluid is discharged into an underground refueling tank.

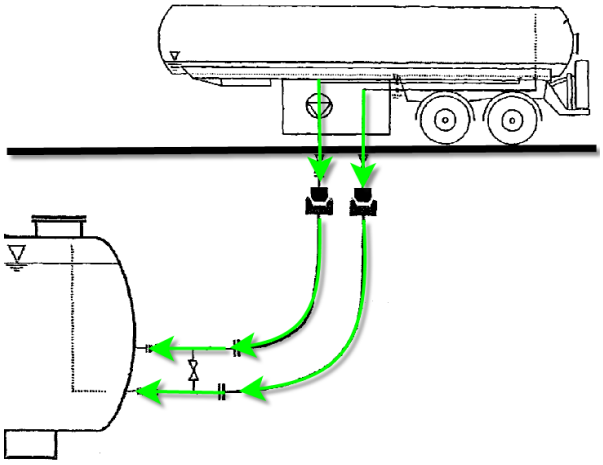

F17C 2265/065

for refueling vehicle fuel tanks

Definition statement

This place covers:

Fluid distribution phase from a refuelling station to a vehicle fuel tank, with small volumes.

In this positive example from WO03006874, the fluid is discharged into a car.

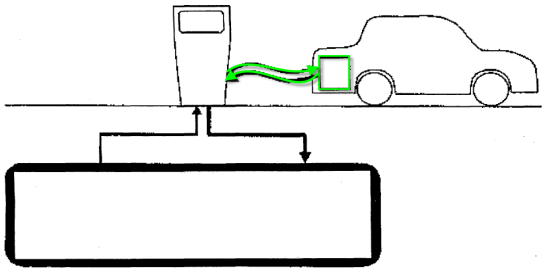

F17C 2265/066

for feeding engines for propulsion

Definition statement

This place covers:

Fluid distribution phase with details of the transfer from the vehicle fuel tank to the propulsion unit, e.g. in cars or on ships.

In this positive example from US6390075, the fluid distribution inside the car is disclosed.

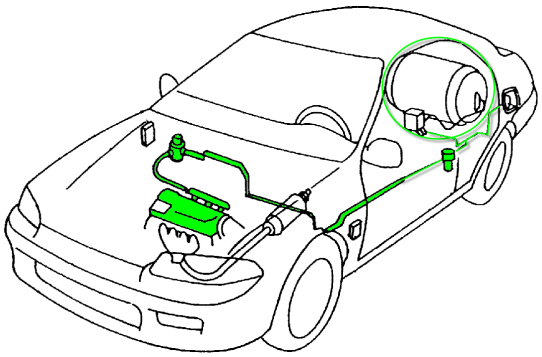

In this negative example US2003150218, only a standard principle scheme is disclosed.

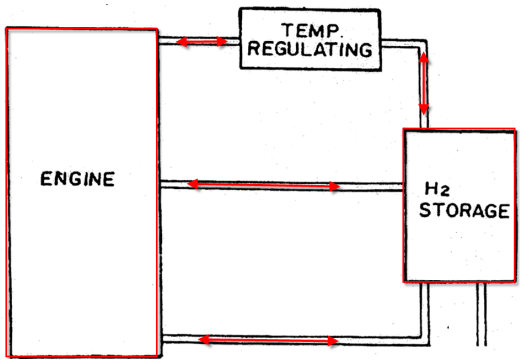

References

Informative references

Attention is drawn to the following places, which may be of interest for search:

Gas tanks	B60K 15/00
Arrangement in connection with fuel supply of combustion engines; Mounting or construction of fuel tanks, in particular	B60K 15/03006
Supplying combustion engines in general	F02M
Apparatus for supplying engines with non-liquid fuels, e.g. gaseous fuels stored in liquid form	F02M 21/00

Special rules of classification

Detailed features related to the discharge of the vessel and the transfer of the fluid should be disclosed.

F17C 2265/068

Distribution pipeline networks

Definition statement

This place covers:

Fluid distribution with details of the transfer from vessels into a pipeline or within a pipeline network.

In this positive example from WO9932837, fluid is loaded into a pipeline network.

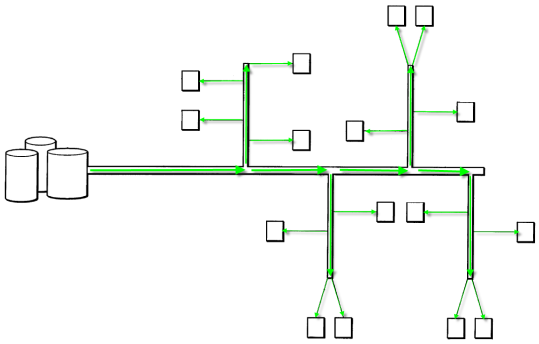

In this negative example from US3092063, fluid is discharged into a local pipe network on a ship.

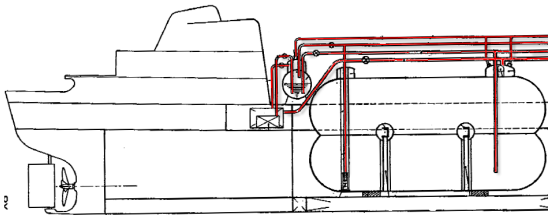

References

Informative references

Attention is drawn to the following places, which may be of interest for search:

Pipeline systems	F17D

F17C 2265/07

Generating electrical power as side effect

Definition statement

This place covers:

Effects achieved, the effect being the generation of electrical power as a by-product of gas storage and handling.

In this positive example from EP2405176, electrical power is generated as side effect.

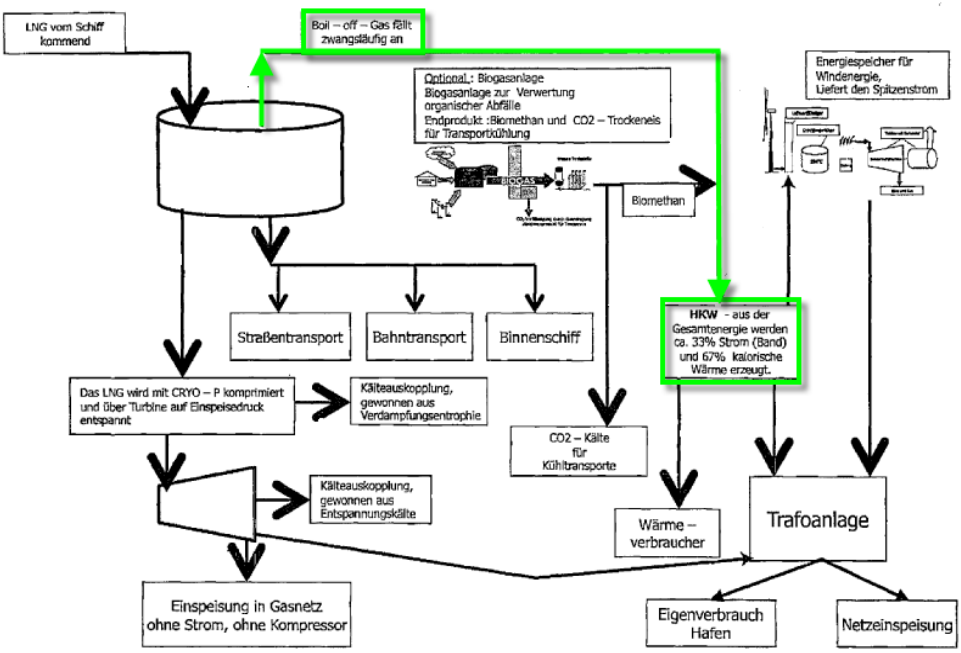

References

Informative references

Attention is drawn to the following places, which may be of interest for search:

Generation conversion or distribution of electric power	H02
System for storing electric energy	H02J
Dynamo-electric machines	H02K
Generators	H02N
Other energy conversion or management systems reducing greenhouse gases emissions	Y02E 70/00

F17C 2270/00

Applications

Definition statement

This place covers:

Applications and tasks in relation with pressure vessels for compressed, liquefied or solidified gas.

F17C 2270/01

for fluid transport or storage

Definition statement

This place covers:

Applications in relation with storage or transport of compressed, liquefied or solidified gas.

F17C 2270/0102

on or in the water

Definition statement

This place covers:

Storage or transport of compressed, liquefied or solidified gas on or in the water.

In this positive example from WO2005032942, LNG is stored/transported in a tanker and then transferred on a floating structure.

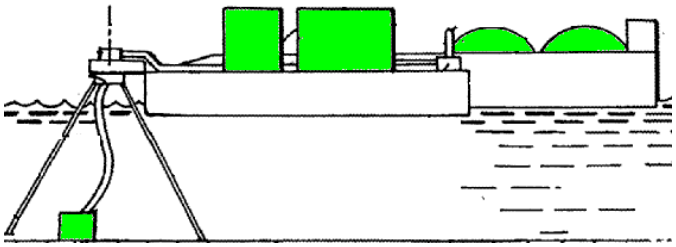

References

Informative references

Attention is drawn to the following places, which may be of interest for search:

Ships or other waterborne vessels	B63
Panels	B63B 3/68
Ships with pressurised content	B63B 25/14
Heat insulated ships	B63B 25/16

F17C 2270/0105

Ships

Definition statement

This place covers:

Storage or transport on ships.

In this positive example from FR2116193, liquefied gas is stored and transported in a tanker.

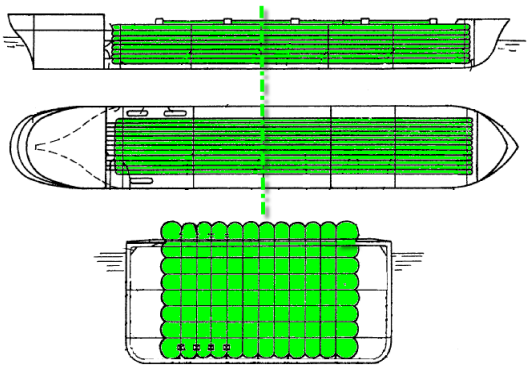

F17C 2270/0107

Wall panels

Definition statement

This place covers:

Storage or transport on ships, the ships comprising wall panels.

In this positive example from GB1332820, wall panels are used for insulation.

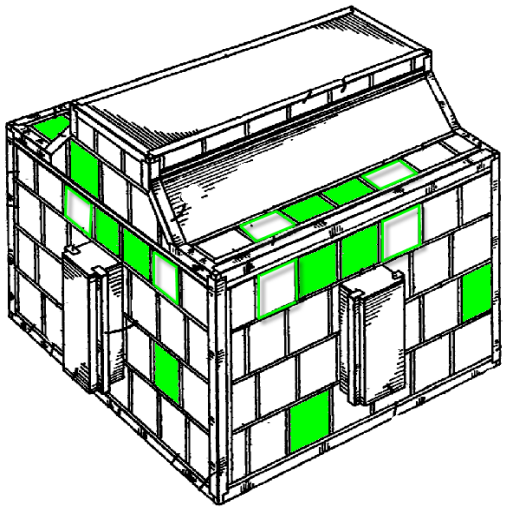

References

Informative references

Attention is drawn to the following places, which may be of interest for search:

Linings of large containers	B65D 90/04 - B65D 90/048

F17C 2270/011

Barges

Definition statement

This place covers:

Storage or transport on barges, i.e. units pulled by ships.

In this positive example from CA2283008, the gas storage system is on top of the deck of the barge.

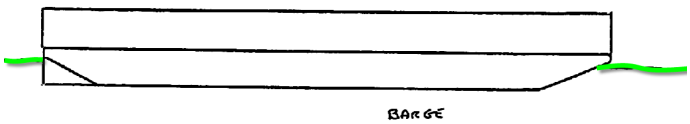

F17C 2270/0113

floating

Definition statement

This place covers:

Storage or transport on barges, the barges floating on the water surface.

In this positive example from WO2004000636, the floating barges can be pulled into a floating haven.

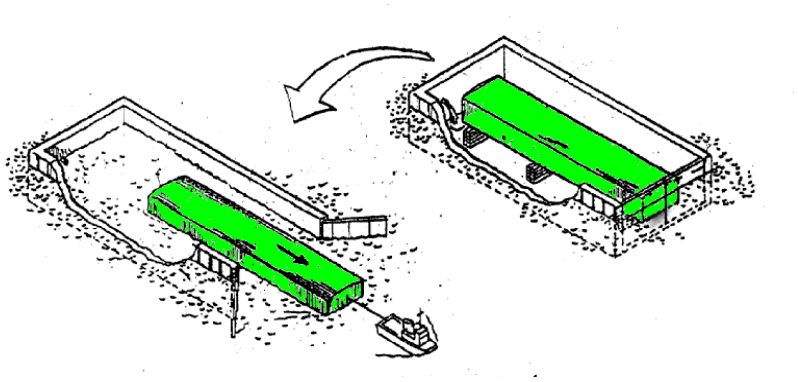

F17C 2270/0115

immerged

Definition statement

This place covers:

Storage or transport on barges, the barges being located below water surface.

In this positive example from US2732687, the barge is immersed in the water.

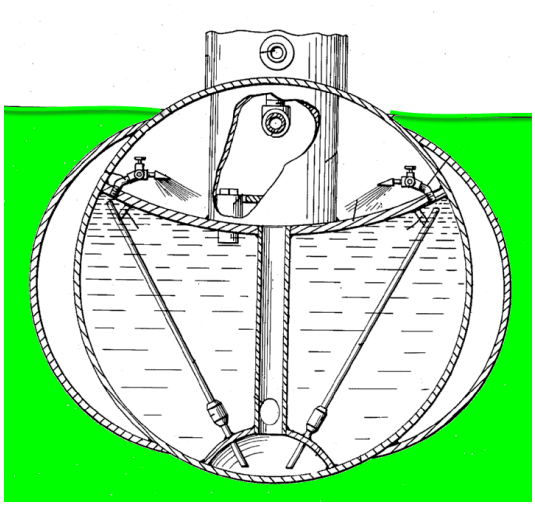

F17C 2270/0118

Offshore

Definition statement

This place covers:

Storage offshore, often in flat sea near the coast.

In this positive example from US2009293506, the storage tanks are located in a semi-submersible offshore structure near the coast.

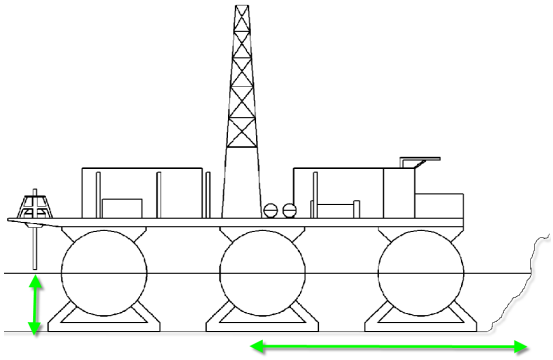

F17C 2270/0121

Platforms

Definition statement

This place covers:

Offshore storage on immobile platforms, usually for processing.

In this positive example from US6517286, the offshore gas production platform is situated above the gas source.

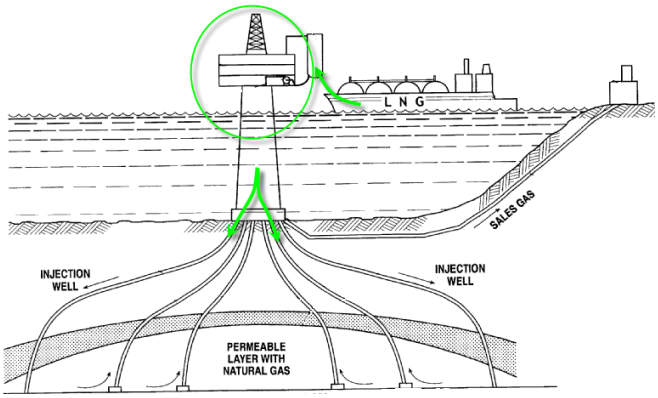

References

Informative references

Attention is drawn to the following places, which may be of interest for search:

Artificial islands mounted on piles or like supports, e.g. platforms on raisable legs	E02B 17/00

F17C 2270/0123

Terminals

Definition statement

This place covers:

Offshore storage using terminals, usually for temporary storage.

In this positive example from WO2006039485, LNG is offloaded to a temporary offshore tank.

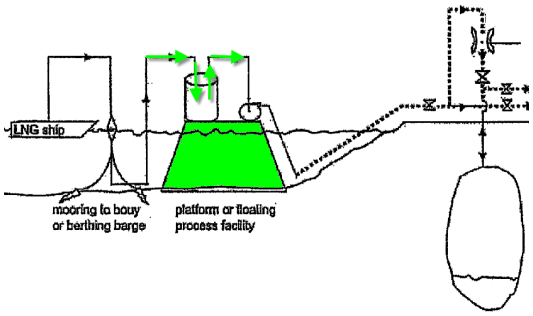

F17C 2270/0126

Buoys

Definition statement

This place covers:

Offshore device using buoys, small floating devices attached to the sea floor for fluid distribution.

In this positive example from US2005042035, LNG is transferred to buoys anchored to the seabed.

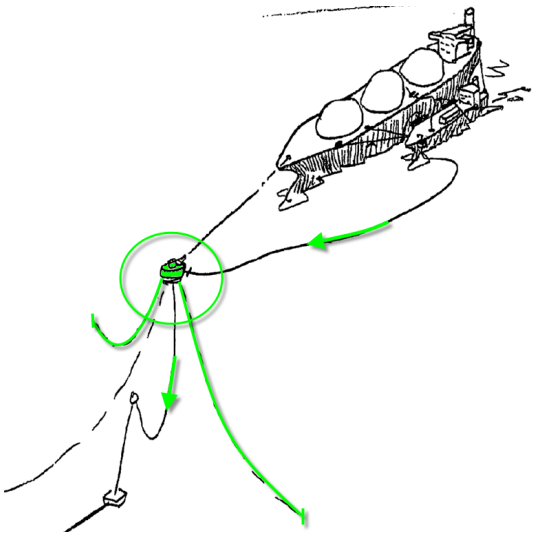

References

Informative references

Attention is drawn to the following places, which may be of interest for search:

Buoys	B63B 22/00

F17C 2270/0128

Storage in depth

Definition statement

This place covers:

Offshore storage in depth, using vessels or deep sea water pressure and temperature for containment.

In this positive example from EP0728537, liquefied CO_2 is stored in bags at high depth.

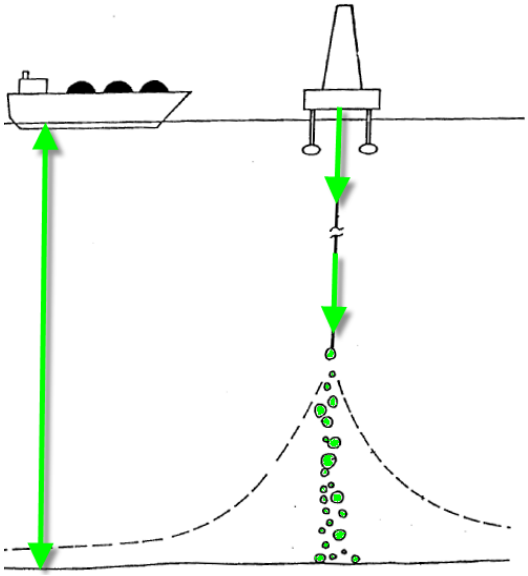

In this positive example from DE743163, the vessel is located on the sea floor.

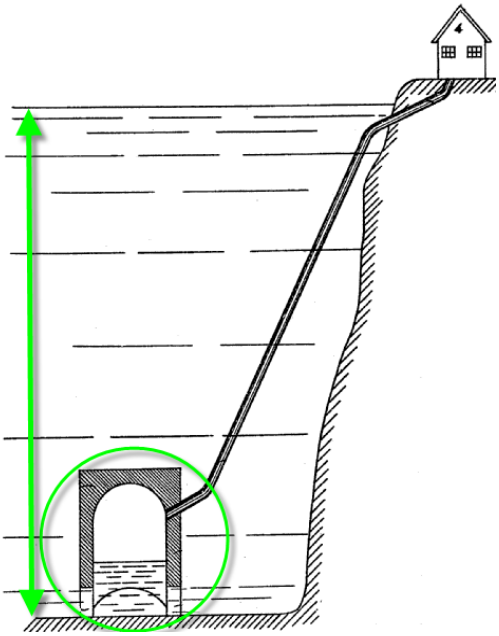

References

Informative references

Attention is drawn to the following places, which may be of interest for search:

Sea dumping waste	B09B 1/002
CO_2 capture or storage with Subterranean or submarine CO_2 storage	Y02C 10/14

F17C 2270/0131

Submarines

Definition statement

This place covers:

Storage or transport in submarines.

In this positive example from US3640237, fluid is stored in a large submarine tank.

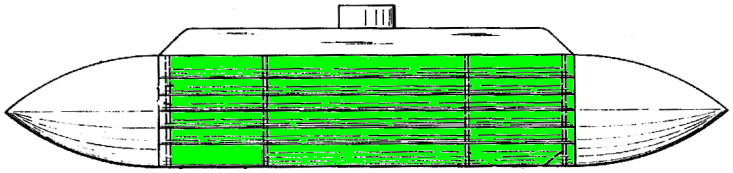

F17C 2270/0134

placed above the ground

Definition statement

This place covers:

Storage of compressed, liquefied or solidified gas on or above the ground.

In this positive example from US3438532, the tank is placed on the ground and supported by pillars.

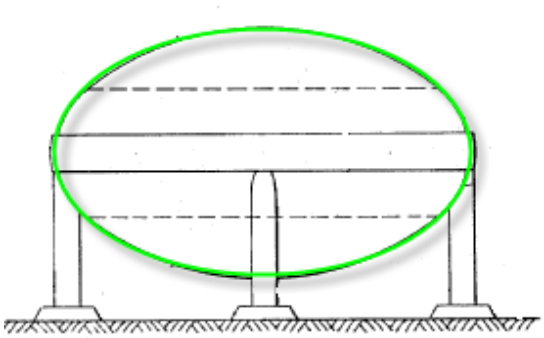

F17C 2270/0136

Terminals

Definition statement

This place covers:

Storage above ground using terminals, e.g. for temporary storage.

In this positive example from US2005061395, fluid is stored in an onshore terminal.

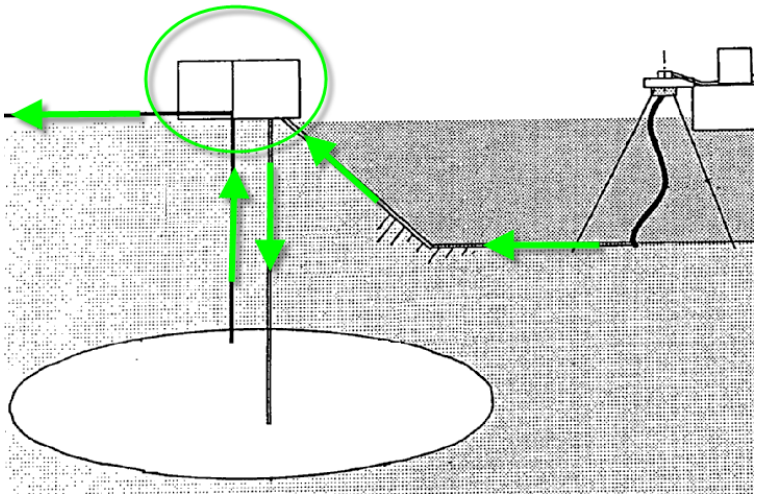

F17C 2270/0139

Fuel stations

Definition statement

This place covers:

Storage in refuelling stations for vehicles.

In this positive example from WO02064395, a fuel station for cars is disclosed.

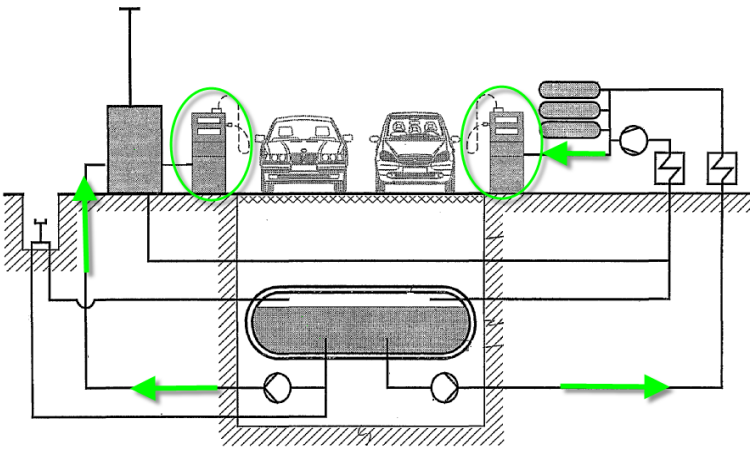

Additionally, gaseous hydrogen is stored above the ground and cryogenic hydrogen is stored underground.

References

Informative references

Attention is drawn to the following places, which may be of interest for search:

Supplying fuel to vehicles	B60S 5/02

F17C 2270/0142

placed underground

Definition statement

This place covers:

Storage of compressed, liquefied or solidified gas at least partially below the ground.

In this positive example from US2117314, the lower tank part is in the ground.

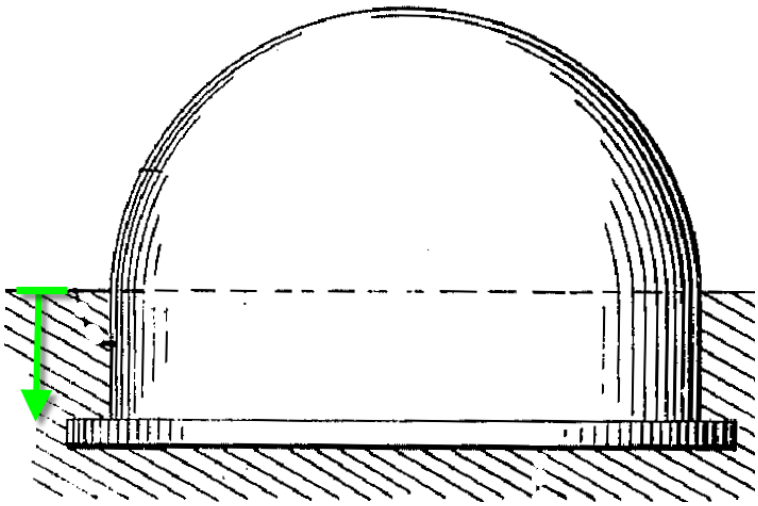

In this positive example from WO02064395, cryogenic hydrogen is stored underground (and gaseous hydrogen above the ground).

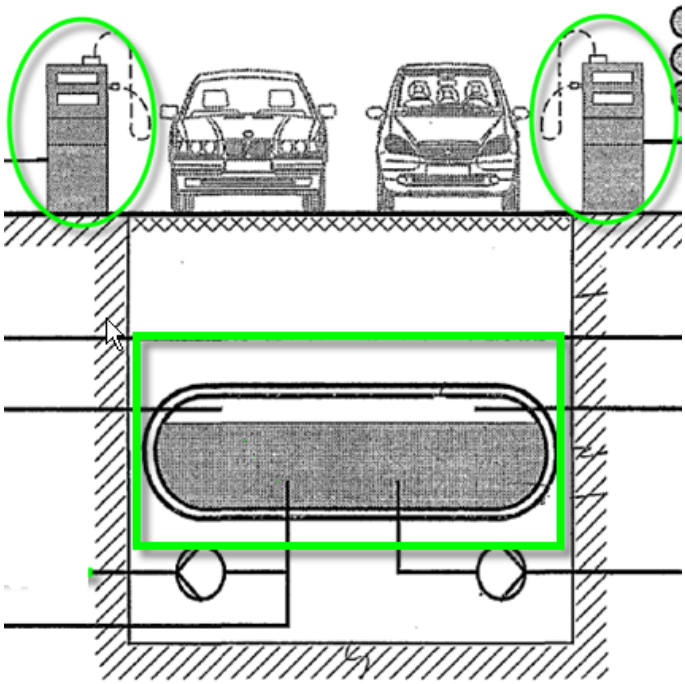

References

Informative references

Attention is drawn to the following places, which may be of interest for search:

Storing fluids in natural or artificial cavities or chambers in the earth	B65G 5/00

F17C 2270/0144

Type of cavity

Definition statement

This place covers:

Particular ways of storing below the ground.

F17C 2270/0147

by burying vessels

Definition statement

This place covers:

Storing below the ground by at least partially burying an existing vessel.

In this positive example from DE9310032U, the whole vessel is buried in the ground.

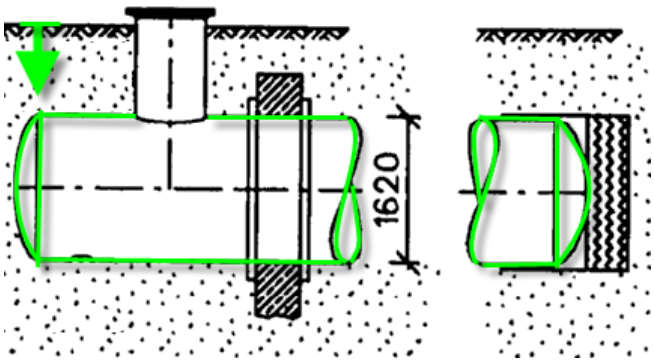

F17C 2270/0149

by digging cavities

Definition statement

This place covers:

Storing below the ground by using a man-made cavity, e.g. a mine.

In this positive example from GB2435505, an vessel is placed into a mine.

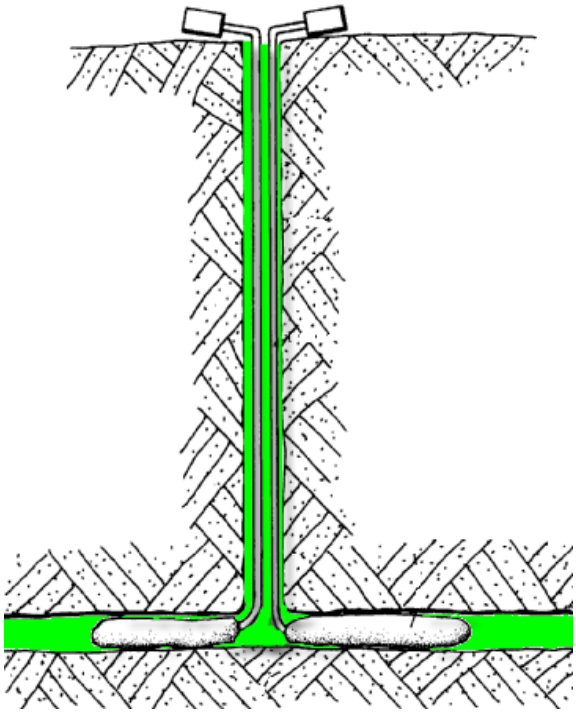

F17C 2270/0152

Salt caverns

Definition statement

This place covers:

Storing below the ground by using a man-made cavity, the man-made cavern having previously been a salt cavern which has been purged from salt.

In this positive example from US2003115889, LNG is stored in an uncompensated salt cavern.

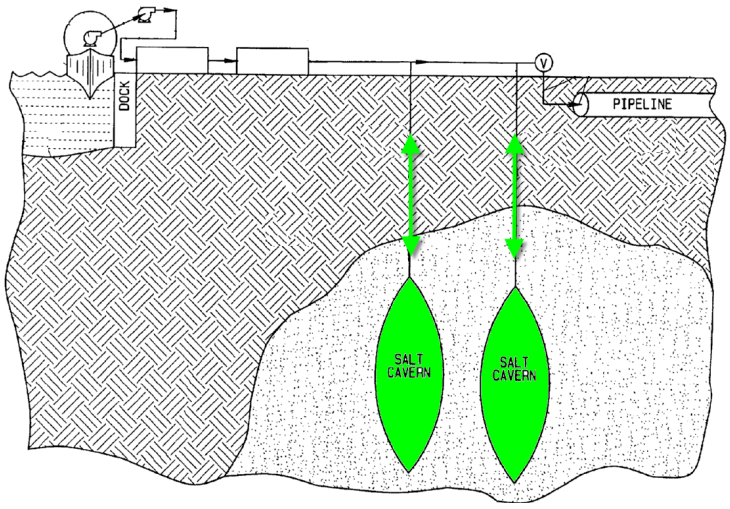

F17C 2270/0155

by using natural cavities

Definition statement

This place covers:

Storing below the ground by using a natural cavity.

In this positive example from US2005061395, the natural cavity is a former oil bed.

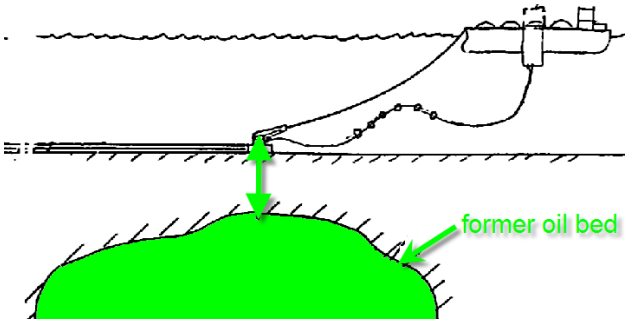

F17C 2270/0157

Location of cavity

Definition statement

This place covers:

Location of the cavity.

F17C 2270/016

onshore

Definition statement

This place covers:

Location of the cavity, the location being under land surface.

In this positive example from US2005061395, the cavity is mainly located under land surface.

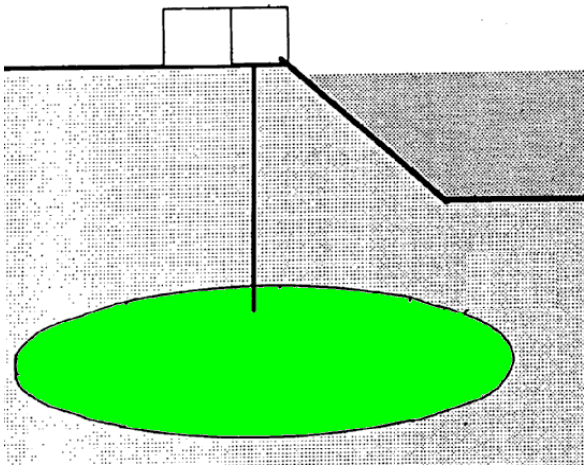

F17C 2270/0163

offshore

Definition statement

This place covers:

Location of the cavity, the location being under sea surface.

In this positive example from US2005061395, the cavity is located under the bottom of the sea.

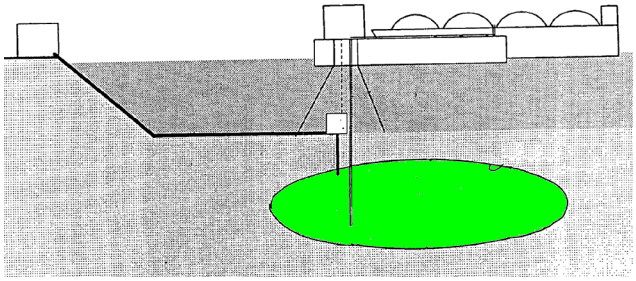

F17C 2270/0165

on the road

Definition statement

This place covers:

Storage or transport of compressed, liquefied or solidified gas on the road.

F17C 2270/0168

by vehicles

Definition statement

This place covers:

Storage or transport by a vehicle.

In this positive example from DE3201660, the fluid is transported on a trailer.

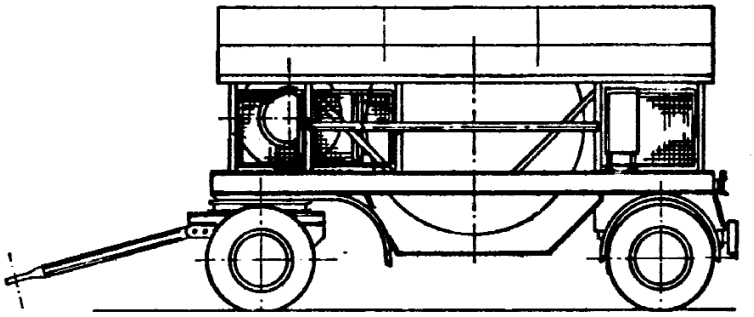

In this positive example from GB191796, a vessel is mounted on a bicycle.

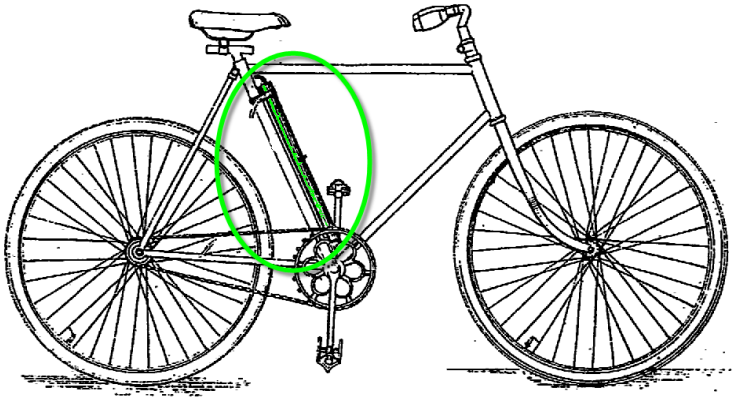

References

Informative references

Attention is drawn to the following places, which may be of interest for search:

Vehicles in general	B60
Arrangement in connection with fuel supply of combustion engines; Mounting or construction of fuel tanks, in particular	B60K 15/00, B60K 15/00
Gas tanks	B60K 15/03006
Mounting of gas tanks	B60K 15/07
Hand propelled vehicles	B62B
Vehicle drawn by animals	B62C
Motor vehicles, Trailers	B62D
Cycles	B62H- B62M

Special rules of classification

Documents that contain the term" vehicle" should be classified herein, and in more specific subclasses if the type of vehicle (e.g. car or bike) is disclosed.

F17C 2270/0171

Trucks

Definition statement

This place covers:

Storage or transport by a vehicle, the vehicle being a truck or its trailer.

In this positive example from FR2056952, the truck transports methane.

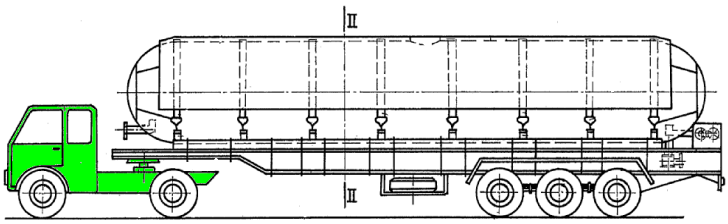

F17C 2270/0173

Railways

Definition statement

This place covers:

Storage or transport by a vehicle, the vehicle being on rail.

In this positive example from GB627137, the wagon transports liquid oxygen or liquid nitrogen.

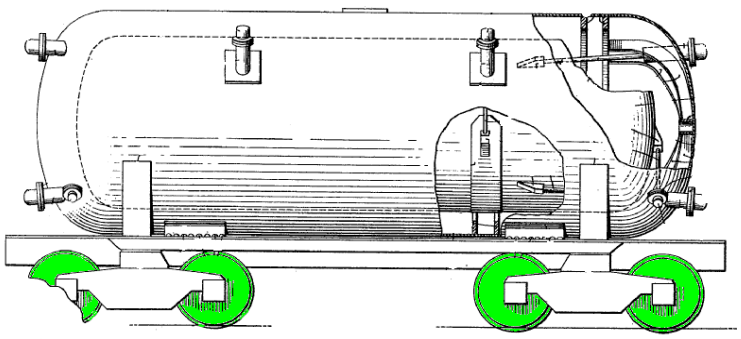

References

Informative references

Attention is drawn to the following places, which may be of interest for search:

Railways in general	B61
Tank wagons for carrying fluent materials	B61D 5/00

F17C 2270/0176

Buses

Definition statement

This place covers:

Storage or transport by a vehicle, the vehicle being a bus.

In this positive example from WO0037847, the vessel is mounted on the chassis of a bus.

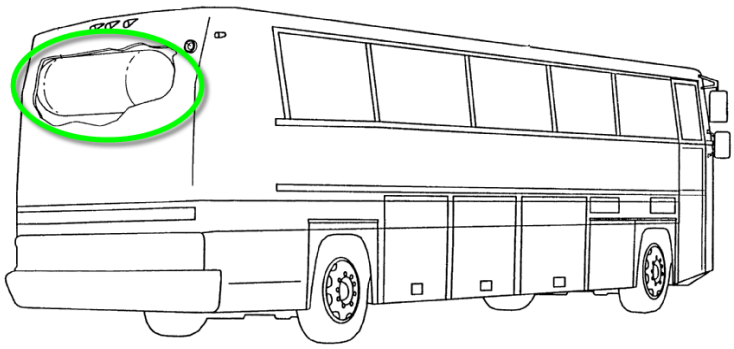

F17C 2270/0178

Cars

Definition statement

This place covers:

Storage or transport by a vehicle, the vehicle being a car.

In this positive example from US6418962, the vessel is attached to the chassis of a passenger car.

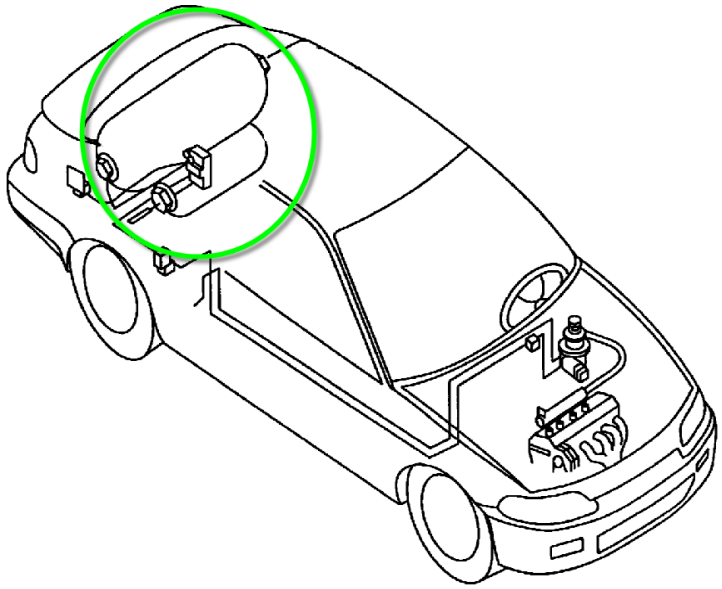

F17C 2270/0181

Airbags

Definition statement

This place covers:

Filling of gas vessels part of an airbag system on a vehicle, to open the airbag.

In this positive example from US6247725, the gas is intended to inflate an airbag.

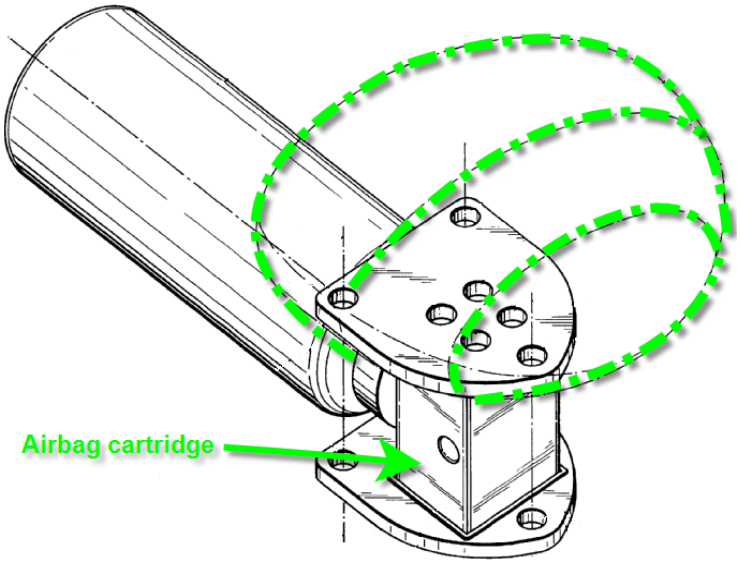

References

Informative references

Attention is drawn to the following places, which may be of interest for search:

Airbag	B60R 21/16
Using instantaneous release of stored pressurized gas	B60R 21/268

Special rules of classification

Only the manufacturing and filling step of gas airbags should be classified herein. Vessels integrated in vehicles and their activation should exclusively be classified in B60R.

F17C 2270/0184

Fuel cells

Definition statement

This place covers:

Vessels for a fuel cell within a vehicle.

In this positive example from US2002088806, hydrogen is used to feed a fuel cell.

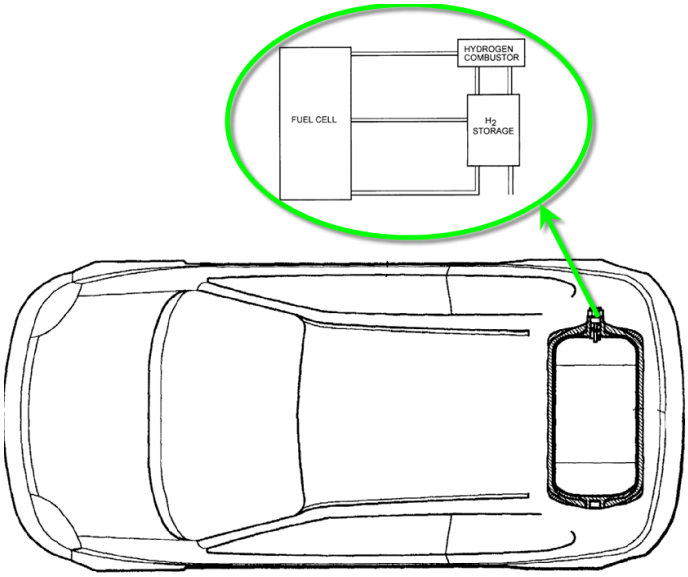

References

Informative references

Attention is drawn to the following places, which may be of interest for search:

Fuel cells and manufacture thereof	H01M 8/00

F17C 2270/0186

in the air or in space

Definition statement

This place covers:

Storage or transport of compressed, liquefied or solidified gas in the air or in space.

In this positive example from US6334589, the vessel is on a launch vehicle.

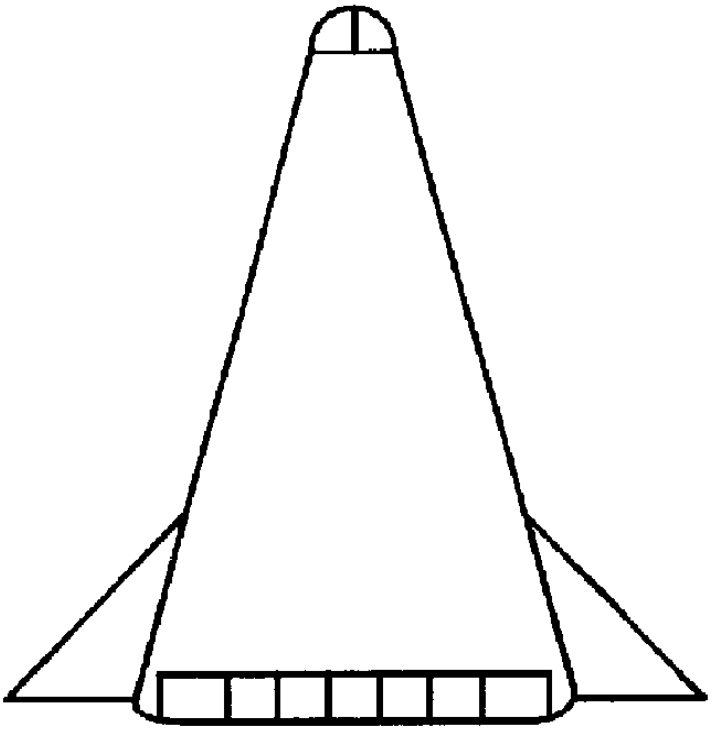

F17C 2270/0189

Planes

Definition statement

This place covers:

Storage or transport by planes or helicopters.

In this positive example from US2541371, vessels are mounted on the wings.

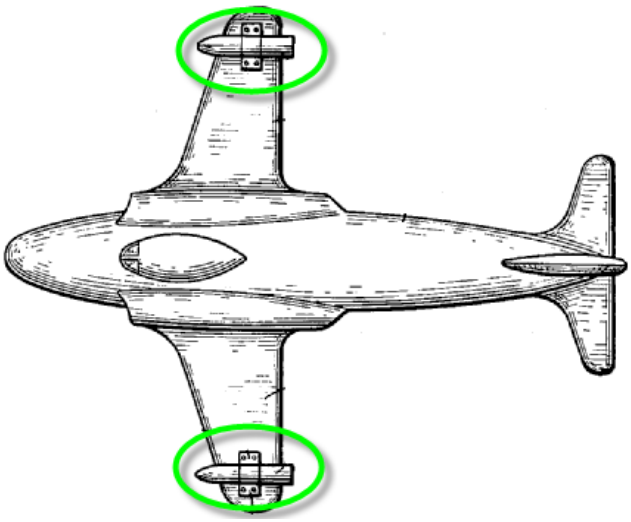

References

Informative references

Attention is drawn to the following places, which may be of interest for search:

Equipment for fitting in or to aircraft	B64D

F17C 2270/0192

Hot air balloons

Definition statement

This place covers:

Storage or transport by hot-air balloons.

In this positive example from DE10032564, helium is used to fly an airship.

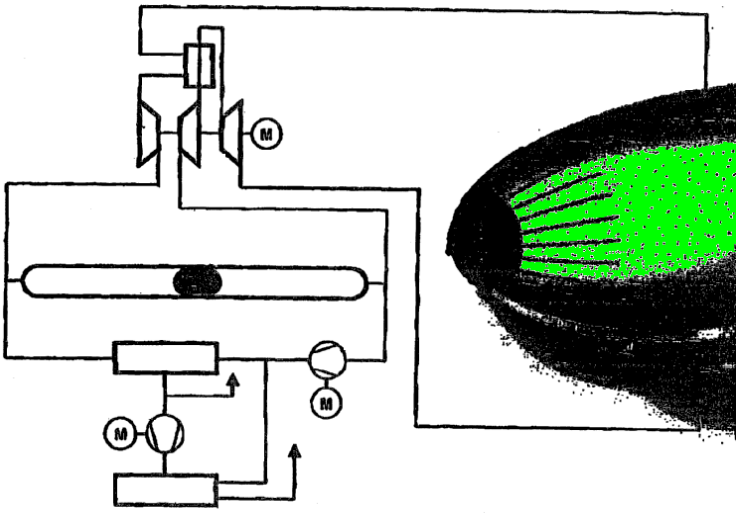

F17C 2270/0194

for use under microgravity conditions, e.g. space

Definition statement

This place covers:

Storage or transport in space, i.e. under microgravity conditions, e.g. in satellites.

In this positive example from US2010187364, a cryogenic propellant fuels a satellite.

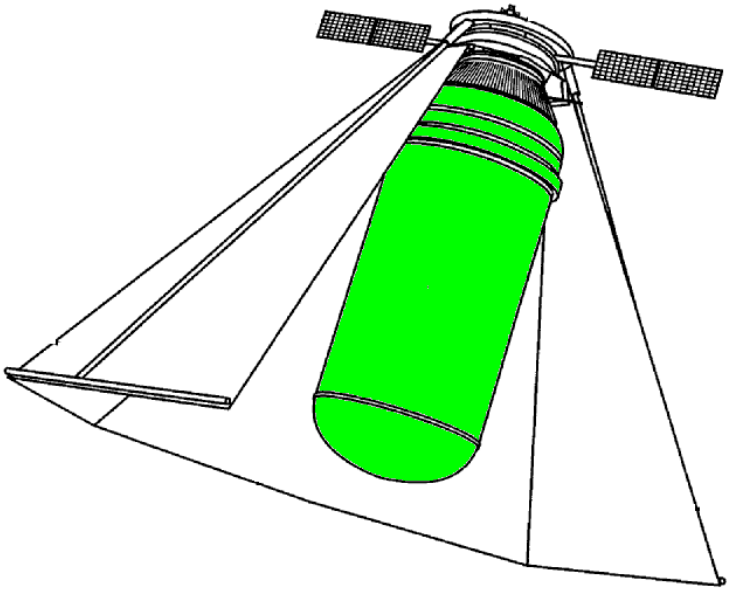

F17C 2270/0197

Rockets

Definition statement

This place covers:

Storage and transport in rockets

In this positive example from US3697021, a liquid oxygen tank serves the propulsion engines of a rocket with oxygen.

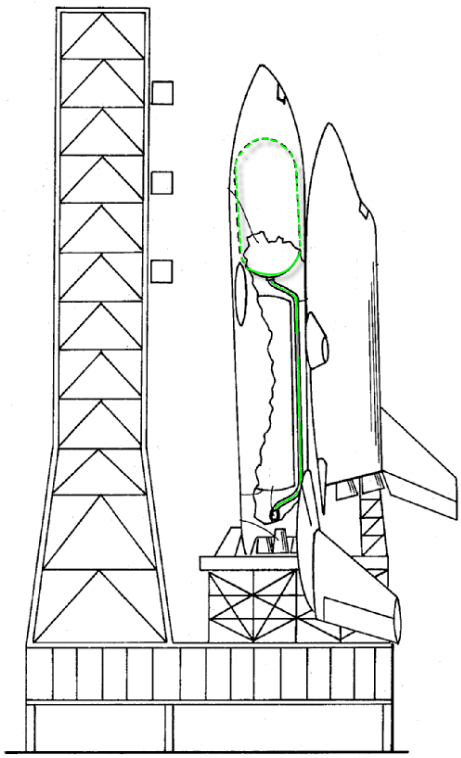

F17C 2270/02

for medical applications

Definition statement

This place covers:

Applications in relation with storage or transport or transfer of compressed, liquefied or solidified gas in the medical field.

In this positive example from WO9966254, hyperpolarized gases is used for MR imaging.

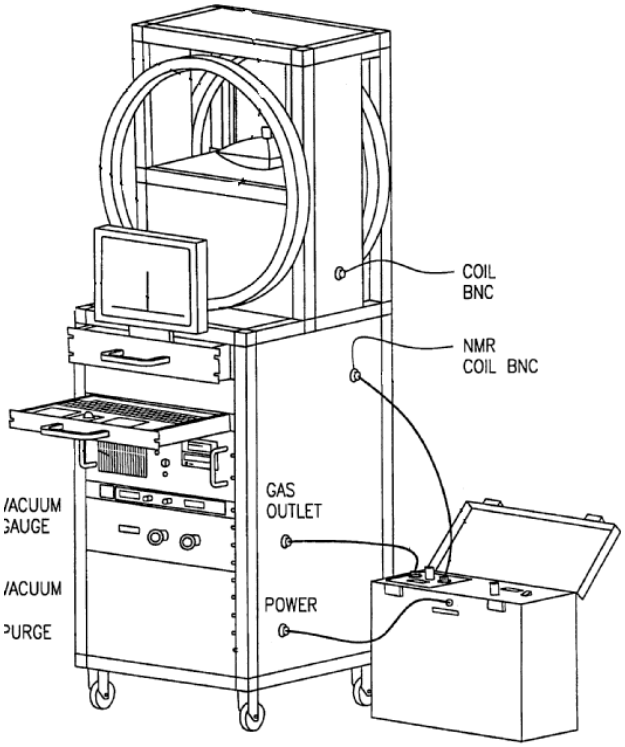

References

Informative references

Attention is drawn to the following places, which may be of interest for search:

Preservation of bodies of humans or animals	A01N 1/00
Casings for storing test samples in the field of diagnosis, surgery	A61B 10/0096
Containers for medical purposes	A61J 1/00

F17C 2270/025

Breathing

Definition statement

This place covers:

Storage or transport or transfer of compressed, liquefied or solidified gas related to breathing.

In this positive example from US2003005933, the patient transports its vessel with medical gases.

References

Informative references

Attention is drawn to the following places, which may be of interest for search:

Respiratory apparatus for life saving	A62B 7/00
Component parts for respiratory or breathing apparatus for life saving	A62B 9/00
Breathing masks or helmets	A62B 18/00
Cartridges with absorbing substances for respiratory apparatus	A62B 19/00
Devices for storing respiratory or breathing apparatus	A62B 25/00

F17C 2270/05

for industrial use

Definition statement

This place covers:

Applications in relation with storage or transport or transfer of compressed, liquefied or solidified gas in industrial fields.

References

Informative references

Attention is drawn to the following places, which may be of interest for search:

Hydraulic engineering	E02B
Combustion apparatus using fluent fuel	F23C

Feeding fuel to combustion apparatus	F23K

Special rules of classification

The expression "for industrial use" in a document does not justify its classification in this group. A specific industrial use must be disclosed.

F17C 2270/0509

"Dewar" vessels

Definition statement

This place covers:

Storage of liquefied gas in a dewar vessel.

In this positive example from DE102005003284, the Dewar vessel contains nitrogen.

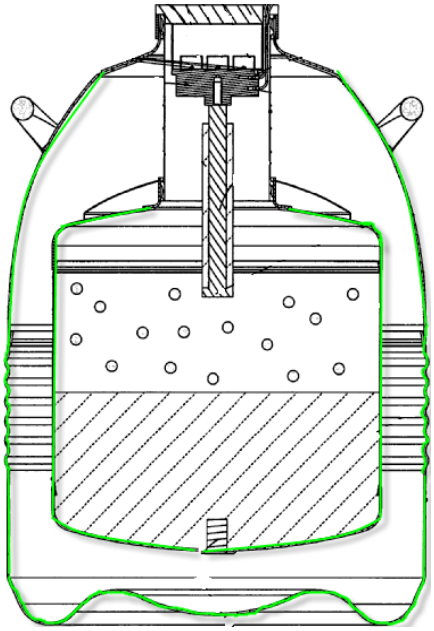

References

Informative references

Attention is drawn to the following places, which may be of interest for search:

Preservation of bodies of humans or animals	A01N 1/00
Vacuum jacket vessels	A47J 41/02
Casings for storing test samples in the field of diagnosis, surgery	A61B 10/0096

F17C 2270/0518

Semiconductors

Definition statement

This place covers:

Storage or transport or transfer in the semiconductor industry.

In this positive example from EP1910733, ammonia vapor is used in a semiconductor manufacturing application.

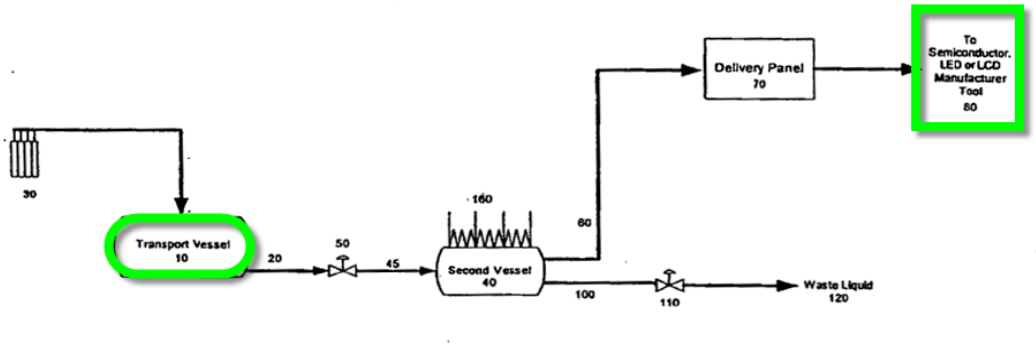

F17C 2270/0527

Supra-conductors

Definition statement

This place covers:

Storage or transport or transfer in the supra-conductor industry.

In this positive example from GB2335973, helium is used to cool a superconducting magnet.

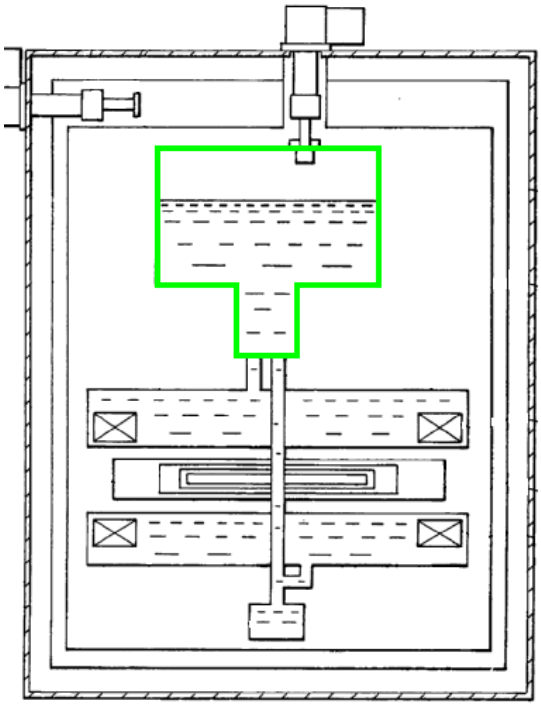

For cooling a superconducting

References

Informative references

Attention is drawn to the following places, which may be of interest for search:

Generation; Conversion or distribution of electric power	H02

F17C 2270/0536

Magnetic resonance imaging

Definition statement

This place covers:

Storage or transport or transfer in the supra-conductor industry related to MRI (Magnetic Resonance Imaging).

In this positive example from US2007101742, helium cools the magnetic coils.

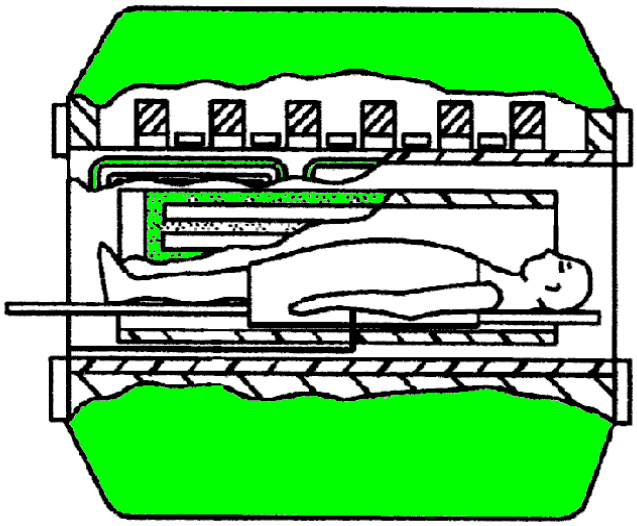

References

Informative references

Attention is drawn to the following places, which may be of interest for search:

Superconducting magnets or coils	H01F 6/00

Synonyms and Keywords

In patent documents, the following abbreviations are often used:

MRI	Magnetic Resonance Imaging
MRT	Magnetic Resonance Tomography

F17C 2270/0545

Tools

Definition statement

This place covers:

Storage or transport or transfer related to tools.

In this positive example from WO2009105097, propane torches are disclosed.

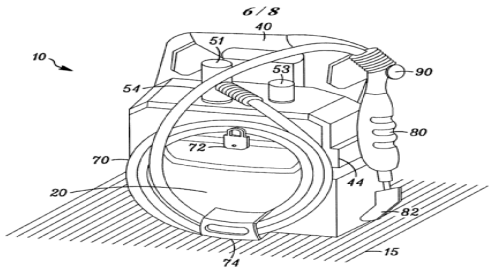

FIG. 10

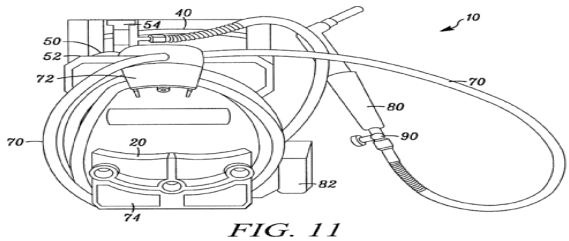

FIG. 11

In this positive example from EP1467842, a nailing tool uses gas cartridges.

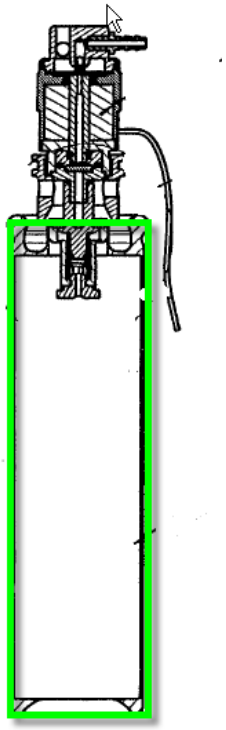

References

Informative references

Attention is drawn to the following places, which may be of interest for search:

Hand or portable tools	B25
Hand nailing tools operated by fluid pressure	B25C 1/04
Hand nailing tools operated by combustion pressure	B25C 1/08
Stapling tools operated by fluid pressure	B25C 5/13

Portable percussive tools with fluid pressure drive	B25D 9/00

F17C 2270/0554

Hydraulic applications

Definition statement

This place covers:

Storage or transport or transfer related to hydraulics.

In this positive example from DE102006045445, the vessel is used as a hydraulic accumulator in a hydraulic circuit.

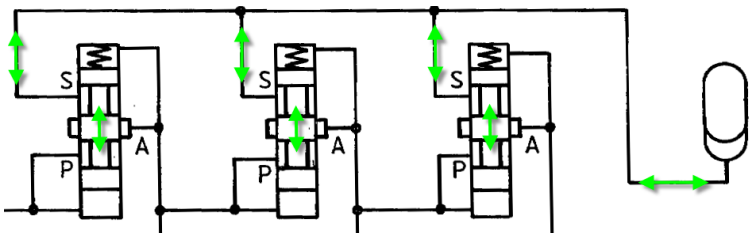

F17C 2270/0563

Pneumatic applications

Definition statement

This place covers:

The storage or transport is in relation with pneumatics.

In this positive example from US4870994, air is used to power several tools.

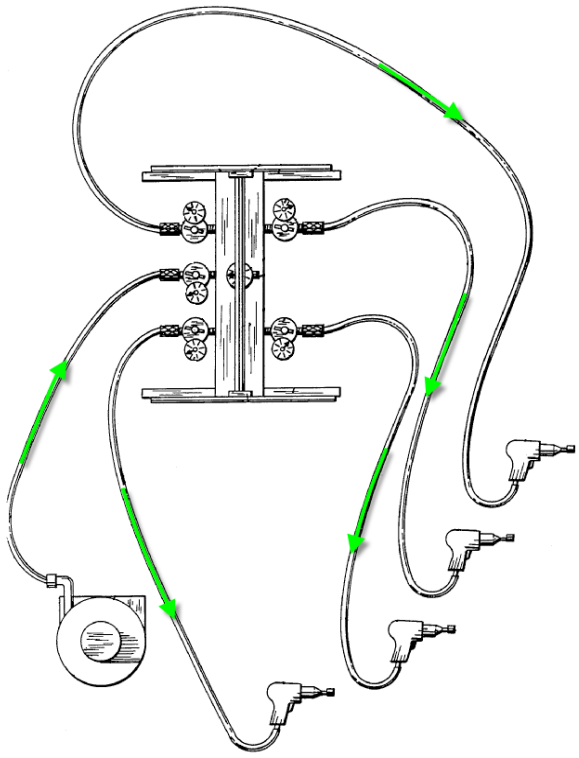

F17C 2270/0572

Isostatic presses

Definition statement

This place covers:

Storage or transport or transfer related to isostatic presses

In this positive example from WO2010102645, an isostatic press is disclosed.

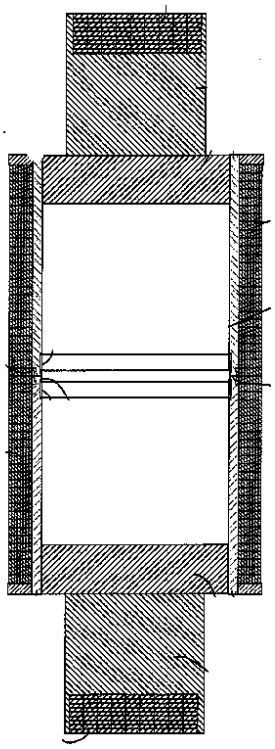

References

Informative references

Attention is drawn to the following places, which may be of interest for search:

Presses in general	B30B

Special rules of classification

Warning about pending reorganisation: Isostatic presses should be exclusively classified in B30B.

F17C 2270/0581

Power plants

Definition statement

This place covers:

Storage or transport or transfer related to the generation of electrical energy in power plants.

In this positive example from GB1343187, compressed air from an underground cavity feeds a power plant.

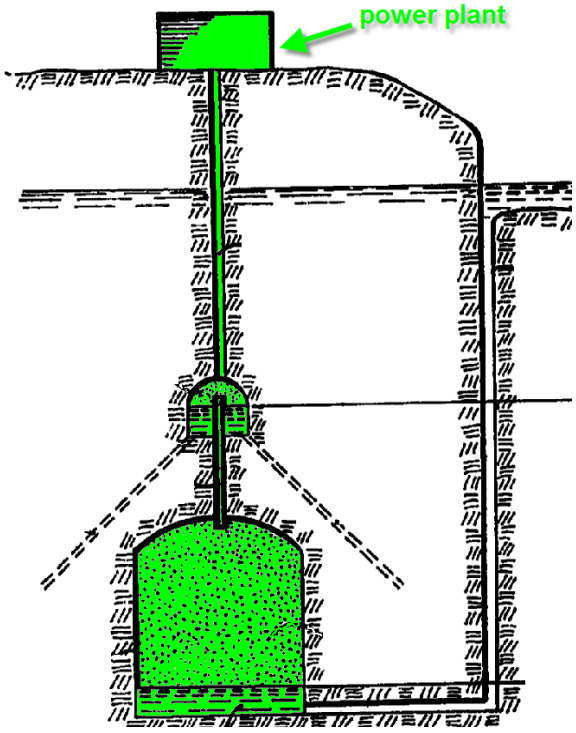

References

Informative references

Attention is drawn to the following places, which may be of interest for search:

Generation conversion or distribution of electric power	H02
System for storing electric energy	H02J
Dynamo-electric machines	H02K
Generators	H02N
Other energy conversion or management systems reducing greenhouse gases emissions	Y02E 70/00

F17C 2270/059

Mass botteling, e.g. merry belts

Definition statement

This place covers:

Storage or transport or transfer related to industrial filling of vessels e.g. on merry-belts or fill carousels.

In this positive example from US2009032133, containers are filled at industrial scale with liquefied carbonic gas.

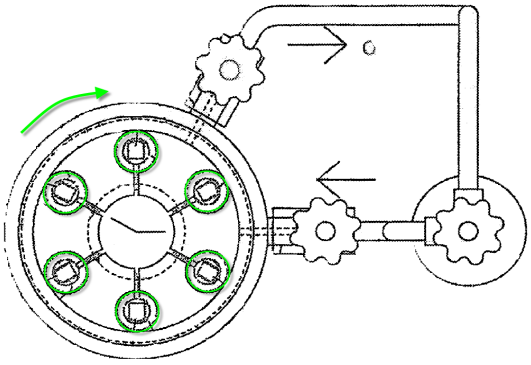

F17C 2270/07

for household use

Definition statement

This place covers:

Applications in relation with storage or transport or transfer of compressed, liquefied or solidified gas for household use.

References

Informative references

Attention is drawn to the following places, which may be of interest for search:

Apparatus or devices for dispensing beverages on draught	B67D 1/00

Special rules of classification

The expression "for household use" in a document does not justify its classification in this group. A specific household use must be disclosed.

F17C 2270/0709

Camping gas

Definition statement

This place covers:

Storage or transport or transfer related to camping.

In this positive example from DE3814446, the vessel is used in a burner for a blowlamp or a gas stove.

References

Informative references

Attention is drawn to the following places, which may be of interest for search:

Stoves and ranges for gaseous fuels	F24C 3/00
Stoves and ranges for liquid fuels	F24C 5/00

F17C 2270/0718

Aerosols

Definition statement

This place covers:

Storage or transport or transfer related to aerosols

In this positive example from EP1712291, the propellant is a carbonic acid gas.

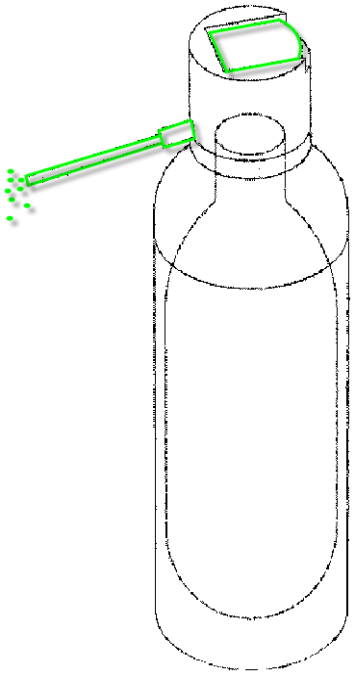

In this positive example from WO2004113787, the container is a classical aerosol can.

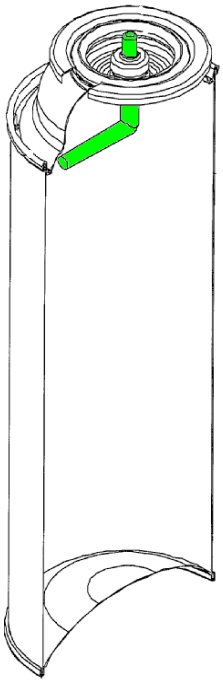

References

Informative references

Attention is drawn to the following places, which may be of interest for search:

Spraying apparatus, Atomising apparatus, nozzles	B05B
Packaging articles or materials under special atmospheric or gaseous conditions; Adding propellants to aerosol containers	B65B 31/00

Containers for delivery of liquid or semi-liquid contents by internal gaseous pressure, i.e. aerosol containers	B65D 83/14

Special rules of classification

Warning about pending reorganisation: Aerosols should be exclusively classified in B65D.

F17C 2270/0727

Thermos flasks

Definition statement

This place covers:

Storage or transport related to thermos flasks.

Special rules of classification

Warning about pending reorganisation: Thermos flasks should be exclusively classified in B65D.

F17C 2270/0736

Capsules, e.g. CO_2

Definition statement

This place covers:

Storage or transport or transfer related to small capsules or cartridges.

In this positive example from GB494878, liquid CO_2 is stored in the capsule to expel liquid from the bigger container.

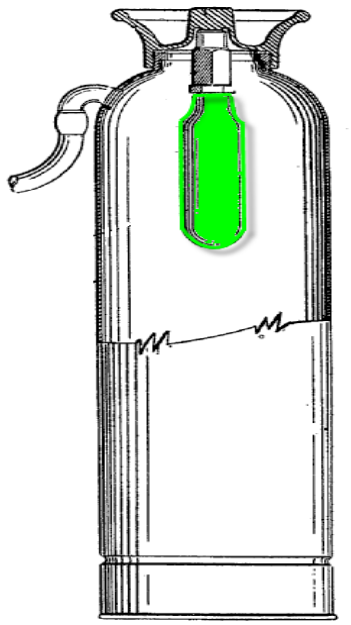

F17C 2270/0745

Gas bottles

Definition statement

This place covers:

Storage or transport related to standard gas cylinders containing gas, e.g. LPG bottles.

In this positive example from GB2031573, gas bottle contains propane or butane.

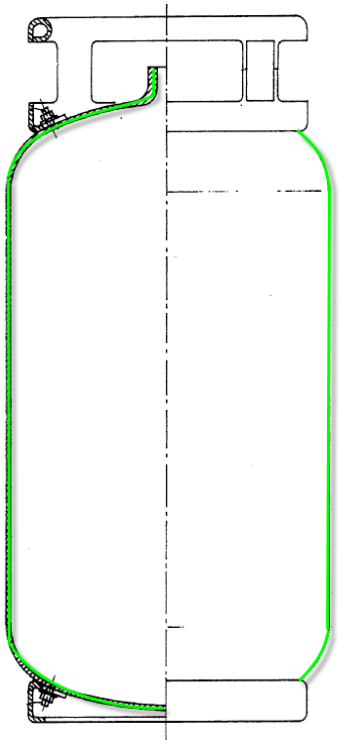

F17C 2270/0754

Fire extinguishers

Definition statement

This place covers:

Storage or transport related to fire extinguishers.

In this positive example from EP1658883, the extinguisher contains CO_2.

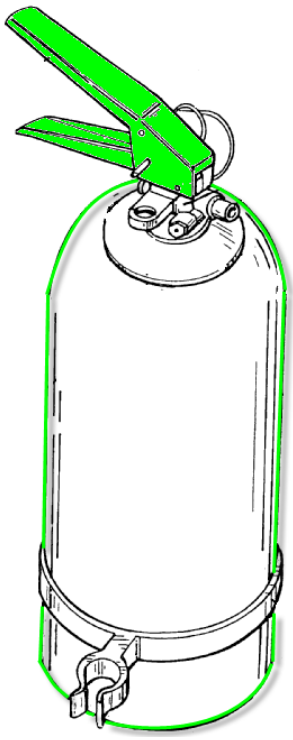

References

Informative references

Attention is drawn to the following places, which may be of interest for search:

Fire fighting	A62C
Portable extinguishers which are permanently pressurised or pressurised immediately before use	A62C 13/00
Permanently installed equipment	A62C 35/00

F17C 2270/0763

Fuel cells

Definition statement

This place covers:

Storage or transport related to fuel cells.

In this positive example from US2005115637, the fuel cell alimented by a fuel cell gas vessel powers a laptop.

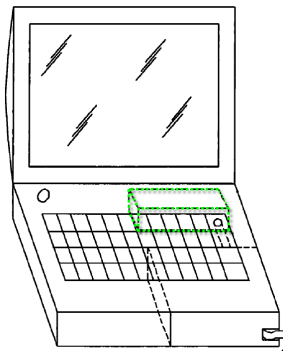

References

Informative references

Attention is drawn to the following places, which may be of interest for search:

Fuel cells and manufacture thereof	H01M 8/00

Special rules of classification

Only fuel cells not related to vehicle propulsion are classified herein.

F17C 2270/0772

Inflation devices, e.g. for rescue vests or tyres

Definition statement

This place covers:

Storage or transport or transfer related to inflating devices.

In this positive example from US2366140, a life raft may be inflated.

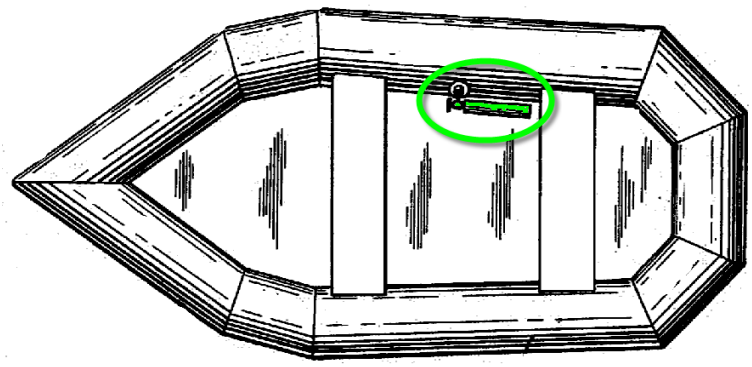

F17C 2270/0781

Diving equipments

Definition statement

This place covers:

Storage or transport or transfer related to diving.

In this positive example from US4181126, the gas allows the diver to breathe under water.

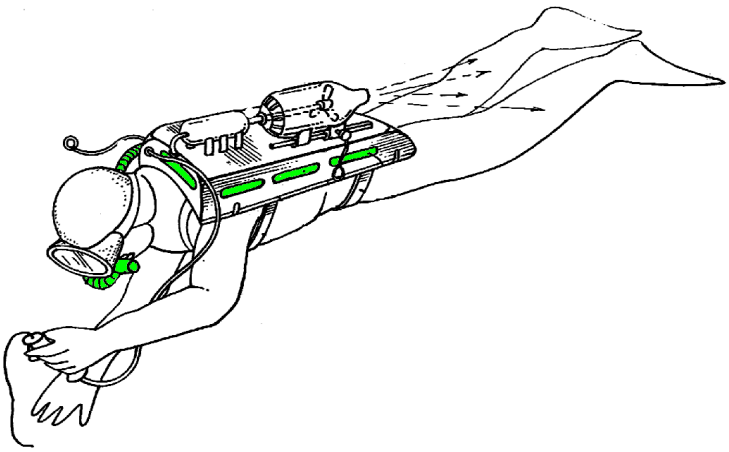

References

Informative references

Attention is drawn to the following places, which may be of interest for search:

Divers equipment	B63C 11/00

F17C 2270/079

Respiration devices for rescuing

Definition statement

This place covers:

Storage or transport or transfer related to breathing in rescue situations.
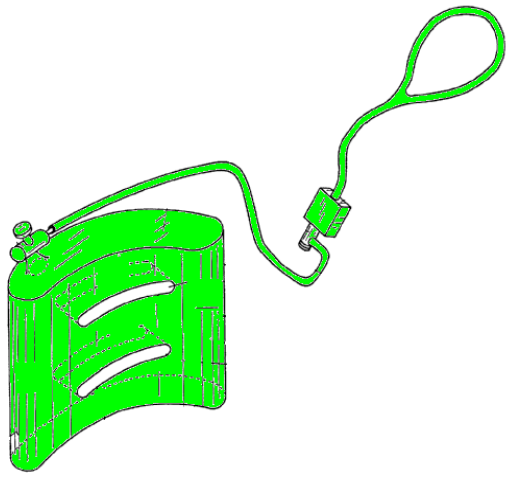
In this positive example from US2003005933, the vessel is used in rescuing situations.