F16M

FRAMES, CASINGS, OR BEDS OF ENGINES OR OTHER MACHINES OR APPARATUS NOT SPECIFIC TO AN ENGINE, MACHINE, OR APPARATUS PROVIDED FOR ELSEWHERE; STANDS OR SUPPORTS

Definition statement

This place covers:

Frames, casings, beds for machines or engines not otherwise provided for in the classification. The machines or engines are attached to the frames, casings or beds in order to provide stability to the machines or engines, and also to make easier the use, the handling and the transportation of the machines or engines. This subclass also covers stands or support for one or more articles not otherwise provided for in the classification. The stands or supports can lie on the floor, can be attached to another object, can be attached to a human body, or can be attached to the wall or the ceiling. The object attached is heldi or resting steady on the support or stand and can also possibly move relatively to the surface on which the support is attached or lies thanks to the different degrees of freedom that the support of stand allows.

References

Informative references

Attention is drawn to the following places, which may be of interest for search:

Furniture in general	A47B
Desk provided with computers	A47B 21/007
Book or Notebook rest holder	A47B 23/042
Chairs, sofas, beds	A47C
Support to show or support objects in shops, restaurants etc.	A47F, A47F 3/00, A47F 5/00, A47F 7/00
Support to hang frames and mirrors	A47G 1/16
Support for Christmas trees	A47G 33/12
Support for medical instrument	A61B 90/00
Dental work stand	A61G 15/14
Stand for blood infusion device	A61M 5/1414
Support for laboratory devices	B01L 9/00
Supports for painting articles	B05B 13/0285 , B25H 1/0007
Tool support for machine tools	B23Q 1/25
XY translation tables	B23Q 1/54
Holding, supporting or positioning device removable from a machine tools	B23Q 3/00
Work benches, portable stands	B25H 1/00
Storage means for tools or instruments	B25H 3/00
Seat for vehicles	B60N 2/00
Arrangements for holding or mounting articles in a vehicle	B60R 11/00
Lifting means provided on a vehicle	B60S 9/00
Dolly	B62B 3/00
Lifting Jacks	B66F 1/06

Camera dolly	B66F 11/048
Foldable scaffold	E04G 1/34
Structure allowing erecting telescopic mast	E04H 12/18
Sockets or holder for poles or posts	E04H 12/22
Device for locking portable objects	E05B 73/00, A47F
Fixation means	F16B
Support for lighting devices	F21V 21/00
Support for ventilation/heating/air-conditioning systems	F24F 13/32
Solar panel supports	F24J 2/52
Support for measuring arrangements	G01B 5/0002
Supports specially adapted for a measuring instrument or a set of measuring instruments	G01D 11/30
Supports for optical elements (telescopes, periscopes)	G02B 23/16
Accessories (support) for cameras	G03B 17/56
Projectors and accessories	G03B 21/00
Constructional details of laptops	G06F 1/1601
Surveillance camera	G08B 13/196
Arrangements for displaying variable information	G09F
Supports for musical instruments	G10G 5/00
Supports for measuring instruments	G12B 5/00, G12B 9/00
Antenna supports	H01Q 1/00
Supports for electric motor	H02K 5/00
Support for solar panel	H02S 20/00
Casings for radio	H04B 1/08
Supports for phones	H04M 1/02
Accessories for video cameras for television	H04N 5/225
Constructional details of display screens (television)	H04N 5/64
Video projectors	H04N 5/7475
Supports for loudspeaker	H04R 1/02
Supports for microphones	H04R 1/08
Details of casings for electric apparatus	H05K 5/00

F16M 1/00

Frames or casings of engines, machines or apparatus; Frames serving as machinery beds

Definition statement

This place covers:

This group concerns frames or casings for machines or engines or the like, in order to make easier handling, transportation, fixation or use of the machines or engines or the like.

Illustrative example of subject matter classified in this group: DE102009052748

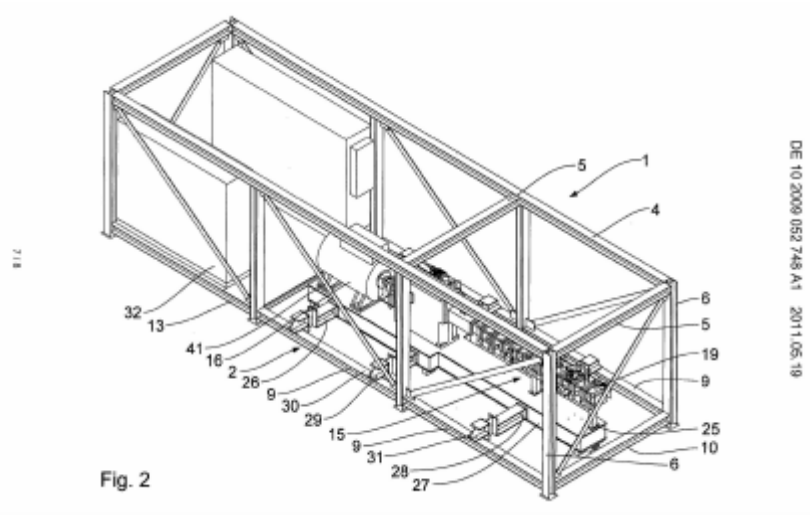

References

Informative references

Attention is drawn to the following places, which may be of interest for search:

Chassis frames in vehicles	B62D 21/00

F16M 1/02

for reciprocating engines or similar machines

Definition statement

This place covers:

Crankcase or casings for reciprocating engines in general. If the crankcase is used in relation with a special type of engine (e.g. internal combustion engine) then it has to be classified in the specific domain and not in F16M 1/02.

References

Limiting references

This place does not cover:

Casings for internal combustion engines	F02F 7/00

F16M 1/022

of tunnel type, i.e. wherein the crankshaft can only be introduced axially (for engines or machines with star-shaped cylinder arrangement F16M 1/023)

References

Informative references

Attention is drawn to the following places, which may be of interest for search:

Engines or machines with star-shaped cylinder arrangement	F16M 1/023

F16M 1/04

for rotary engines or similar machines

Definition statement

This place covers:

Crankcase or casings for rotary engines in general. If the crankcase is used in relation with a special type of engine, then it has to be classified in the specific domain and not in F16M 1/02.

References

Informative references

Attention is drawn to the following places, which may be of interest for search:

Electrical and mechanical couplings	H01R 13/00

F16M 3/00

Portable or wheeled frames or beds, e.g. for emergency power-supply aggregates, compressor sets (construction of vehicles in general B60 - B62)

Definition statement

This place covers:

Illustrative example of subject matter classified in this group: EP0976967

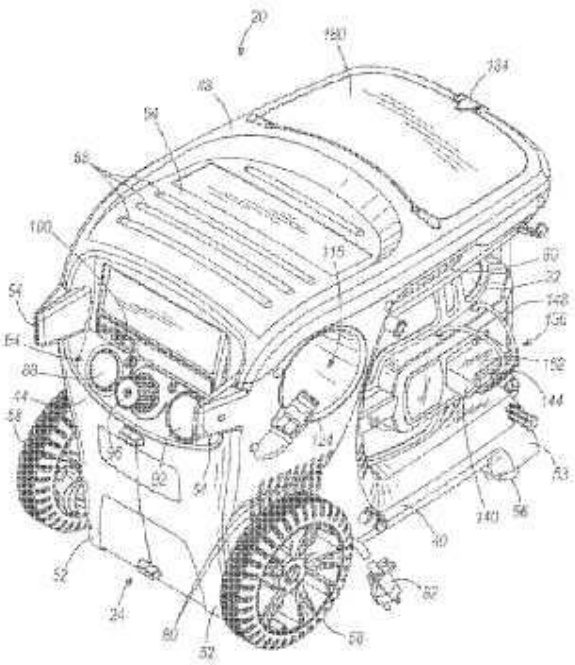

FIG. 1

References

Informative references

Attention is drawn to the following places, which may be of interest for search:

Construction of vehicles in general	B60- B62
Portable electric generator	F02B 63/04
Mobile piston pumps	F04B 35/06

F16M 5/00

Engine beds, i.e. means for supporting engines or machines on foundations

Definition statement

This place covers:

Illustrative example of subject matter classified in this group: EP1832799

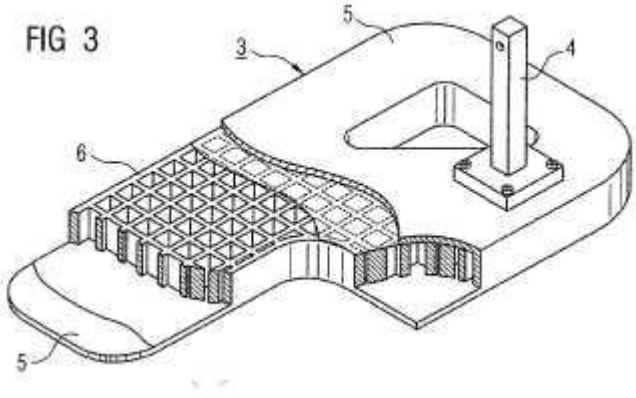

and: US2005263669

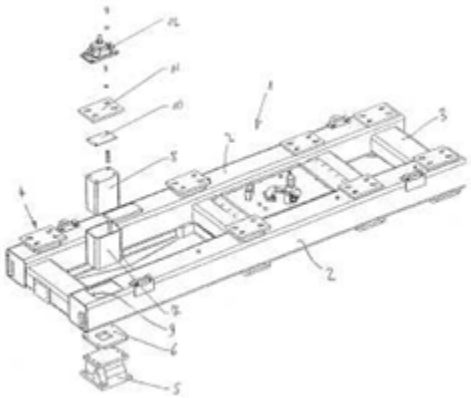

References

Informative references

Attention is drawn to the following places, which may be of interest for search:

Machine beds	B23Q 1/015
Supports for engines in vehicles	B60K 5/12

F16M 7/00

Details of attaching or adjusting engine beds, frames, or supporting-legs on foundation or base; Attaching non-moving engine parts, e.g. cylinder blocks (elastic or equivalent mounting for absorbing vibrations F16F, especially F16F 15/04)

Definition statement

This place covers:

Illustrative example of subject matter classified in this group: US2009032654

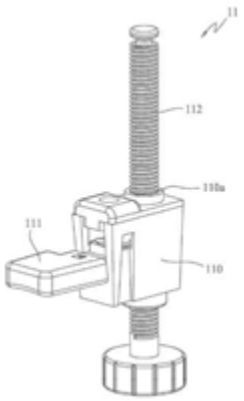

References

Informative references

Attention is drawn to the following places, which may be of interest for search:

Levelling devices for furniture	A47B 91/02
Supports for engines in vehicles	B60K 5/12
Supporting arrangements for washing machines	D06F 39/125
Elastic or equivalent mounting for absorbing vibrations	F16F, F16F 15/04

F16M 9/00

Special layout of foundations with respect to machinery to be supported (foundations for machinery E02D 27/44)

Definition statement

This place covers:

Illustrative example of subject matter classified in this group: GB1440426

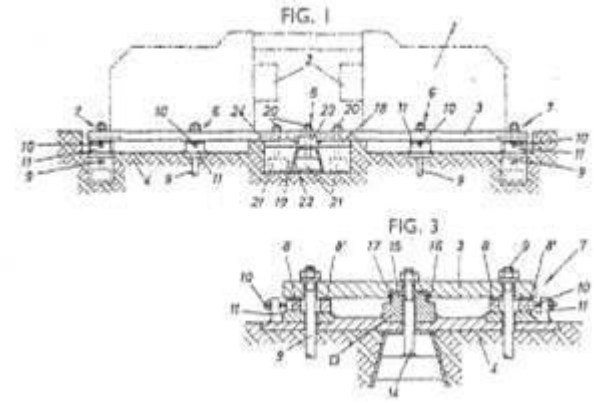

References

Informative references

Attention is drawn to the following places, which may be of interest for search:

Foundations for machinery	E02D 27/44

F16M 11/00

Stands or trestles as supports for apparatus or articles placed thereon {Stands for scientific apparatus such as gravitational force meters} (without heads F16K 13/00; easels or stands for blackboard or the like A47B 97/04; show-stands A47F 7/00; for workmen E04G 1/32; {sockets or holders for poles or posts E04H 12/22} ; supporting, suspending for lighting devices F21V 21/00; special modifications for particular apparatus or articles, see the appropriate subclasses)

Definition statement

This place covers:

F16M 11/00 and F16M 13/00 and the depending lower groups are used to classify the features in relation:

- With the place where the support is to be fixed, attached or rests;
- With the movements of the object that the support allows.

References

Informative references

Attention is drawn to the following places, which may be of interest for search:

Easels or stands for blackboard or the like	A47B 97/04

Show-stands	A47F 7/00
For workmen	E04G 1/32
Sockets or holders for poles or posts	E04H 12/22
Supporting, suspending for lighting devices	F21V 21/00

Special rules of classification

F16M 11/00 should not be used to classify any documents, because if a document fits in F16M 11/00, there is a more relevant class in one of the subgroups of F16M 11/00 or in Indexing Code F16M 2200/08. It is in

this relevant subgroup or Indexing Code that the document should be classified.

F16M 2200/00 is used to classify other type of features than the one of F16M 11/00 or F16M 13/00.

The following method should be followed to classify a document under F16M 11/00, F16M 13/00, F16M 2200/00 and the depending lower groups.

The following items should be first identified:

- The stand or support (S),
- The apparatus (A) to be supported,
- The surface or the object (F) on or to which the support S should be fixed, attached or rest.

-Once these items are identified, two portions of the support should be then identified:

- The head: includes the means for attachment of the apparatus A and when existing, the first cinematically independent joint assembly directly attached to the latter.
- The undercarriage: includes everything making up the stand S under the head but not including this one.

-Then the first feature to be classified is where the support S should be fixed, attached or rest. This can be done after having identified the surface or object F defined before:

- If the support S is attached or fixed to a wall, a post, a ceiling or another object then the support S should be classified in F16M 13/02 or a depending lower group;
- If the support S is meant to support a handheld apparatus A, a class should be given in F16M 13/00, F16M 13/005 or F16M 13/04;
- If the support S is meant to be attached or held by a person , F16M 13/04 should be given;
- If the support S is connected to an arrangement for propelling the support, e.g. dolly with wheels, camera moving on a cable or on rails, it should be classified in F16M 11/42 and the depending lower groups;
- If none of these cases are verified (e.g. for a stand simply resting on the floor), it is not necessary to classify this feature. If details of the foot or base of the stand or support are interesting (constructional feature, cable arrangement...) F16M 2200/08 should be given. The fact that only groups in F16M 11/00 and depending lower groups will be given to a document means that this one will rest on the floor, and cannot be attached or fixed to an other object or wall or ceiling or person body..

-Then, the movements allowed by the head and the means of attachment of the apparatus A with the support S should be classified in F16M 11/02 and the depending lower groups.

-Then, the movements allowed by the undercarriage should be classified in F16M 11/20 and the depending lower groups.

-The additional relevant information should also be classified in the parallel scheme F16M 2200/00 or in the groups F16M 11/16, F16M 11/18.

Additional remarks:

- If it is not clear how the support is to be used, e.g. no clear orientations in the space and therefore a precise definition of the movement can be done then general groups should be given.
- If the product to be supported is not described and therefore the head can not be defined, only classes for the undercarriage should be given.

F16M 11/02

Heads

Definition statement

This place covers:

Means for attachment of an apparatus and when existing, the first cinematically independent joint assembly directly attached to the latter.

Particular case: If the support only consist of the connection and no movement of the object to be supported is allowed by the support once attached, then the head will be the attachment and the rest of the support is an undercarriage.

F16M 11/04

Means for attachment of apparatus; Means allowing adjustment of the apparatus relatively to the stand

Definition statement

This place covers:

The supports which do not allow any movement of the apparatus to be supported and which allow a permanent connection of the apparatus e.g. by screws, this connection is considered as being the head. Then the undercarriage (monolithic bloc not allowing any movements) should be classified in F16M 11/22 and eventually in F16M 2200/08 in case of other special features of the foot or base stand.

Illustrative example: JP2010175998

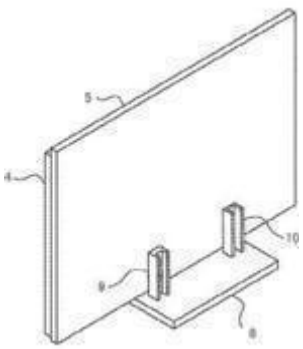

Special rules of classification

Balancing means should be classified in the new scheme in F16M 2200/04 and lower dependent groups and arms: in F16M 2200/06 lower dependent groups

F16M 11/041

{Allowing quick release of the apparatus}

Definition statement

This place covers:

Illustrative example of subject matter classified in this group: ep2196720

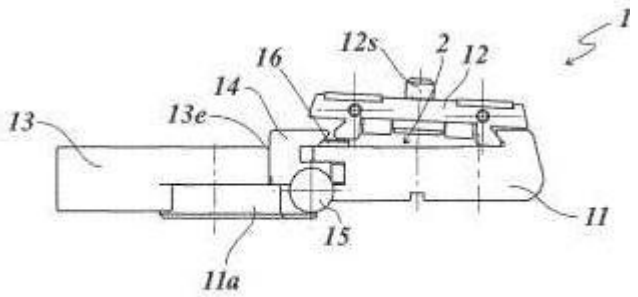

Fig. 7

F16M 11/043

{Allowing translations}

Definition statement

This place covers:

F16M 11/043 should be used when the translation possible is not clearly defined with respect to the direction and that it is possible that the supports be positioned such that translation in all three directions is possible. If the support can only be used such that the translation is always a translation as defined in one of the dependent groups then this group should be given.

Illustrative example: EP2288960

Fig. 4

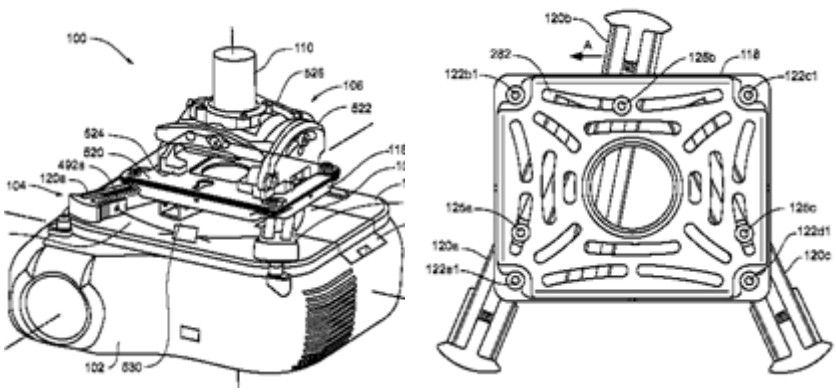

F16M 11/045

{adapted to left-right translation movement}

Definition statement

This place covers:

Illustrative example of subject matter classified in this group:

Platform x-y: jp2297004

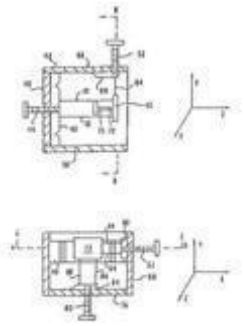

F16M 11/046

{adapted to upward-downward translation movement}

Definition statement

This place covers:

Illustrative example of subject matter classified in this group: US2011108698

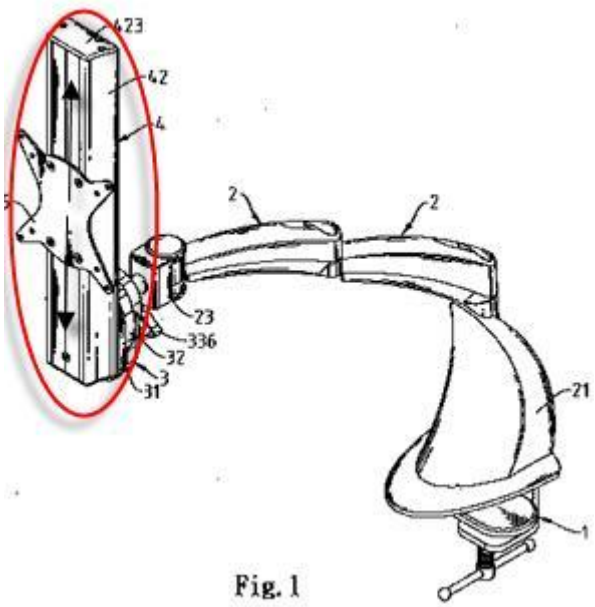

Fig. 1

and: EP1570203

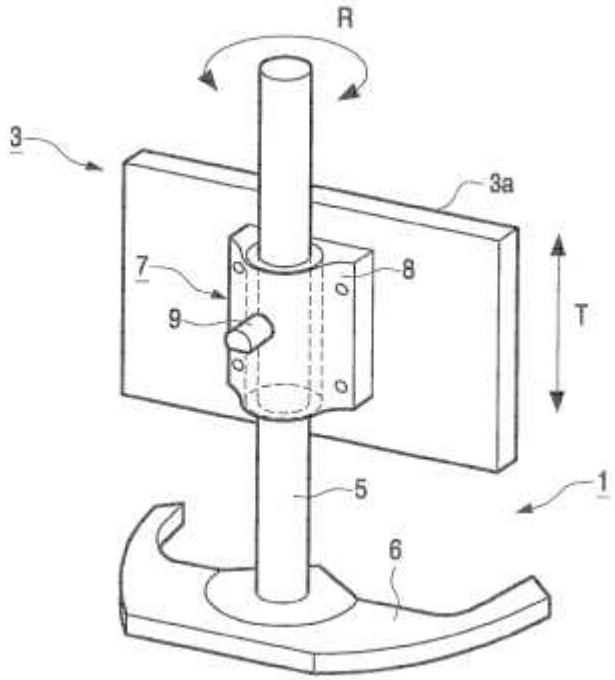

F16M 11/048

{adapted to forward-backward translation movement}

Definition statement

This place covers:

Illustrative example of subject matter classified in this group:

Platform x-y: jp2297004

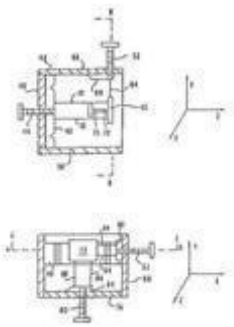

F16M 11/06

allowing pivoting

Definition statement

This place covers:

comprises heads which are generally described without any special applications and therefore not necessarily restricted to a rotation around a horizontal or a vertical axis.

F16M 11/08

around a vertical axis, {e.g. panoramic heads (F16M 11/12 takes precedence)}

Definition statement

This place covers:

Illustrative example of subject matter classified in this group:

Pan: US2009073643

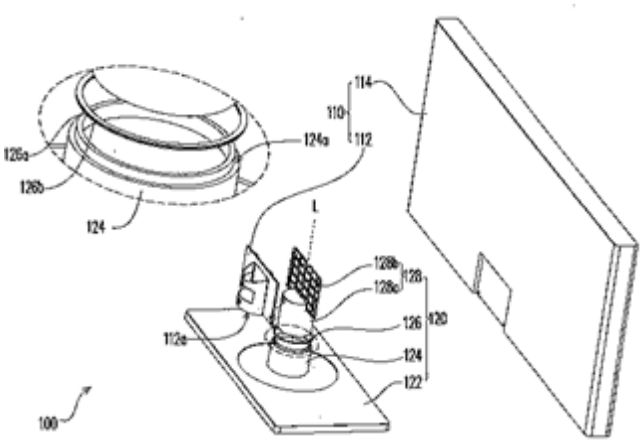

and: EP1570203

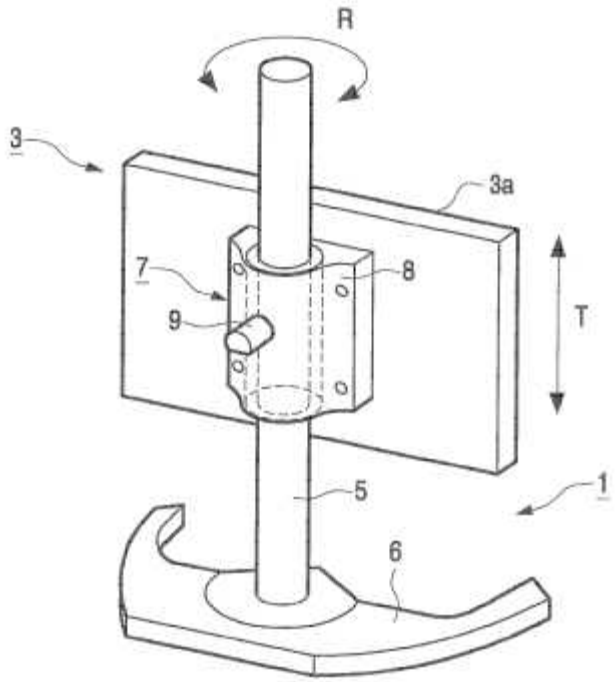

F16M 11/10

around a horizontal axis {(F16M 11/12 takes precedence)}

Definition statement

This place covers:

Only contains heads allowing tilting movement.

Illustrative examples of subject matter classified in this group: EP2329645

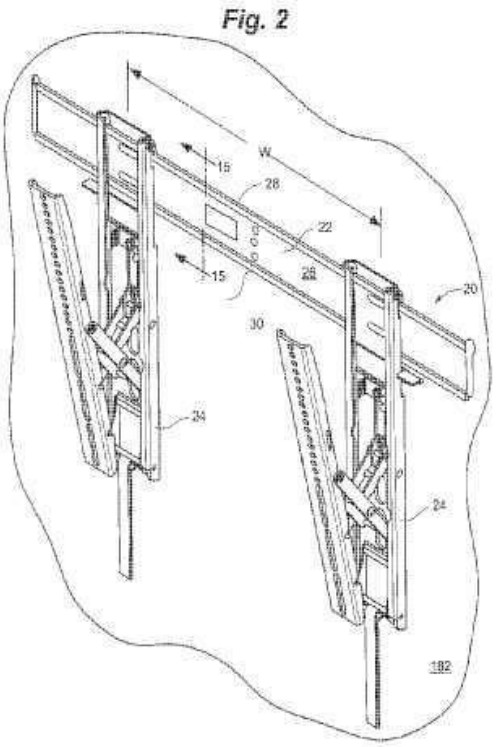

and: US2010193647

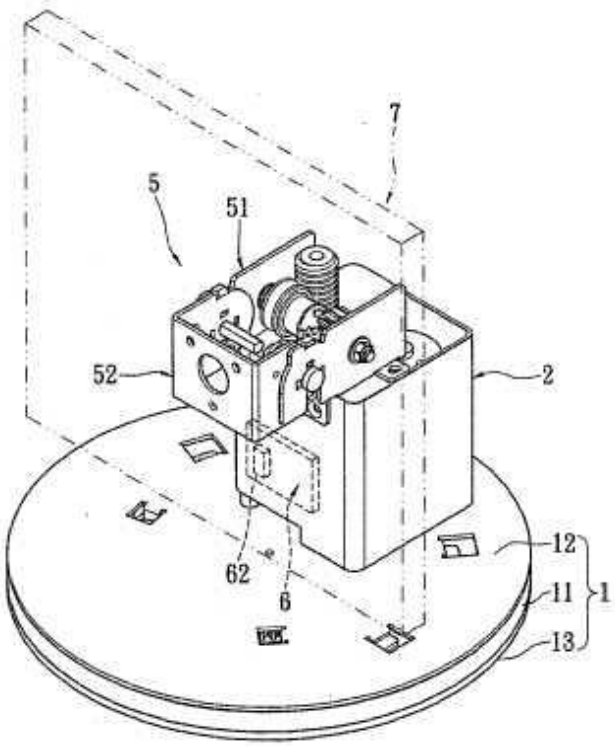

F16M 11/105

{the horizontal axis being the roll axis, e.g. for creating a landscape-portrait rotation}

Definition statement

This place covers:

Illustrative example of subject matter classified in this group: EP2307784

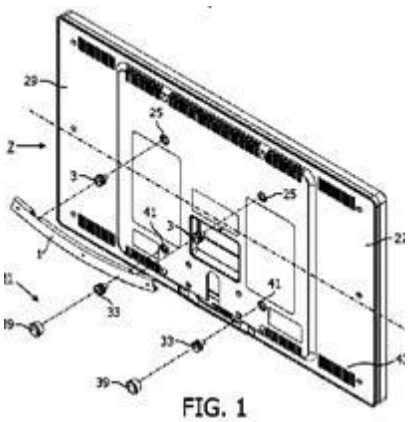

FIG. 1

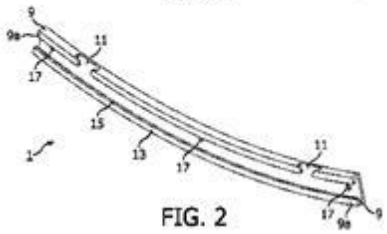

FIG. 2

F16M 11/12

in more than one direction

Definition statement

This place covers:

Only the joints allowing tilting rolling and panning (the three possible rotations)

F16M 11/121

{constituted of several dependent joints}

Definition statement

This place covers:

Illustrative example of subject matter classified in this group: WO2010018241

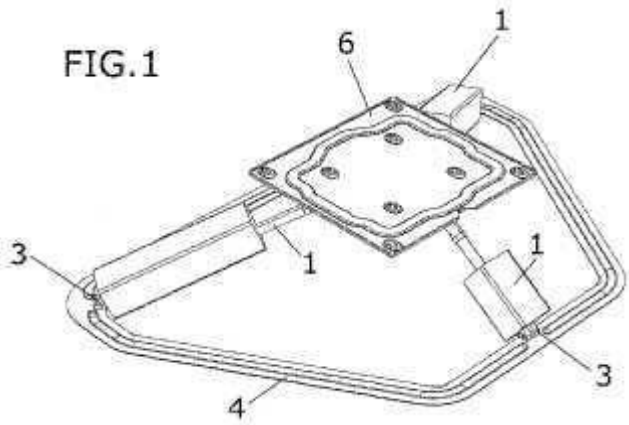

and: US2008072699

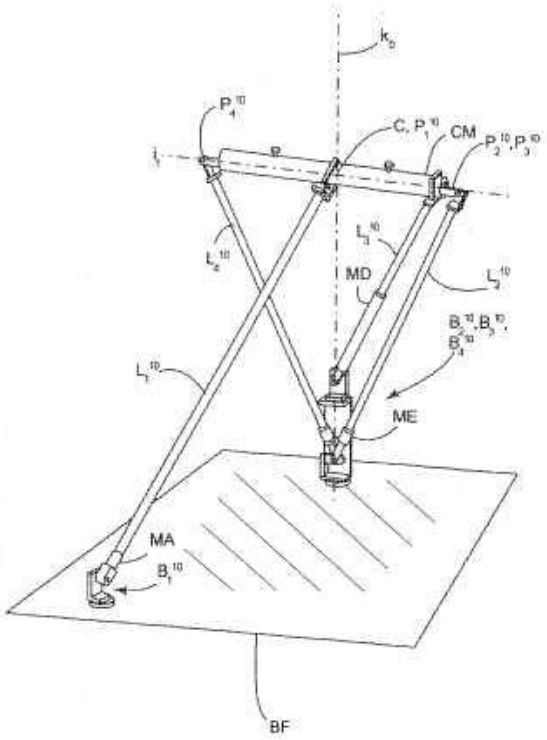

F16M 11/123

{the axis of rotation intersecting in a single point, e.g. by using gimbals}

Definition statement

This place covers:

Illustrative example of subject matter classified in this group: GB2469344

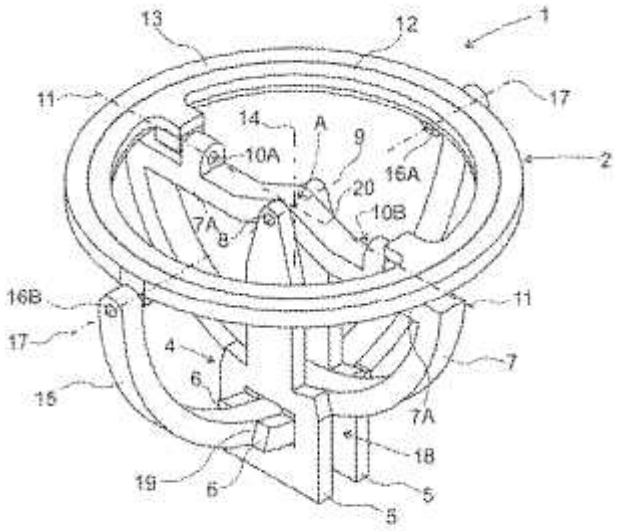

FIG 1

F16M 11/125

{for tilting and rolling (F16M 11/14 takes precedence)}

Special rules of classification

F16M 11/14 takes precedence

F16M 11/126

{for tilting and panning (F16M 11/14 takes precedence)}

Special rules of classification

F16M 11/14 takes precedence

F16M 11/128

{for panning and rolling (F16M 11/14 takes precedence)}

Special rules of classification

F16M 11/14 takes precedence

F16M 11/14

with ball-joint (ball-jointed hinges F16C 11/06 {adjustable mountings employing universal joints for lighting devices F21V 21/26 - F21V 21/30})

Definition statement

This place covers:

Illustrative example of subject matter classified in this group: us2011020055

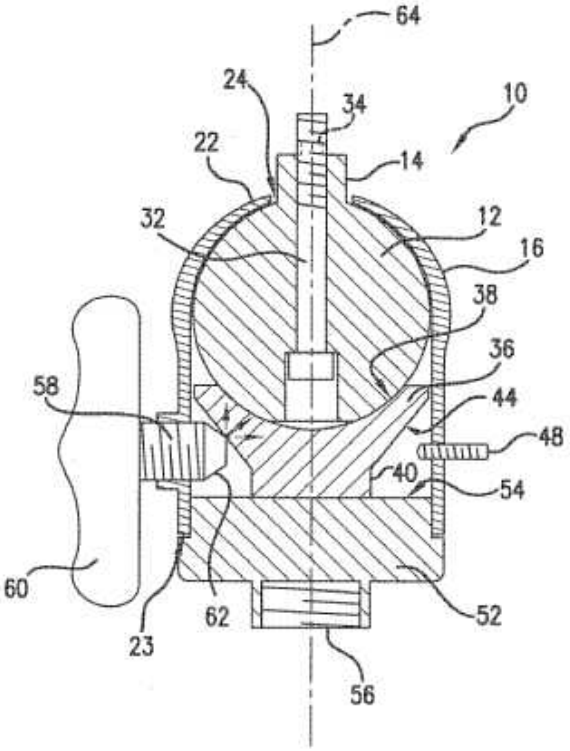

References

Informative references

Attention is drawn to the following places, which may be of interest for search:

Ball jointed hinges	F16C 11/06
Adjustable mountings employing universal joints for lighting devices	F21V 21/26 - F21V 21/30

Special rules of classification

F16M 11/14 takes precedence over F16M 11/125, F16M 11/126 and F16M 11/128

F16M 11/20

Undercarriages with or without wheels

Definition statement

This place covers:

Definition of undercarriage:

everything making up the stand under the head but not including this one (see definition of head in F16M 11/02).

References

Informative references

Attention is drawn to the following places, which may be of interest for search:

Supporting elements for portable lighting devices	F21L 15/08
Lighting	F21V
Supporting arrangements for lighting devices	F21V 21/00

Special rules of classification

F16M 11/20 should not be used to classify any documents, because if a document fits in F16M 11/20, there is a more relevant class in one of the subgroups of F16M 11/20. It is in this relevant subgroup(s) that the document should be classified.

If the undercarriage is monolithic (not allowing any movement), it should be classified in F16M 11/22 like e.g.: JP2010175998

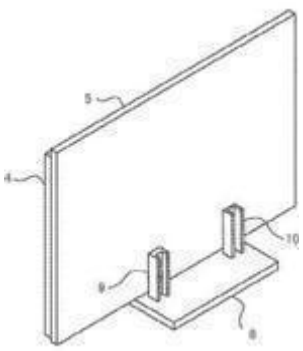

F16M 11/2007

{comprising means allowing pivoting adjustment}

Definition statement

This place covers:

Undercarriages which are generally described without any special applications and therefore not necessarily restricted to a rotation around a horizontal or a vertical axis.

F16M 11/2014

{around a vertical axis (F16M 11/2035 takes precedence)}

Definition statement

This place covers:

Illustrative example of subject matter classified in this group: US2010193647

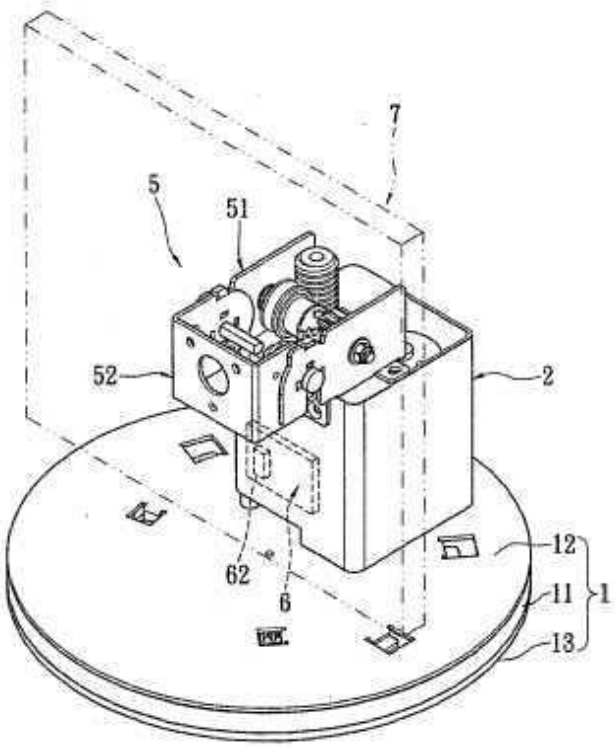

and: WO2008002728

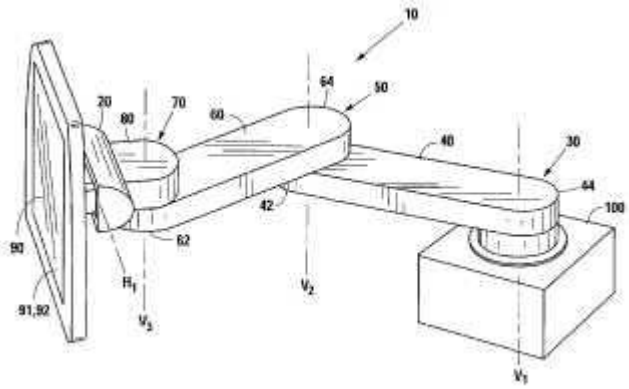

Special rules of classification

F16M 11/2035 takes precedence

F16M 11/2035

{in more than one direction}

Definition statement

This place covers:

Contains the undercarriages constituted of several independent joints and/or allowing tilting, panning and rolling.

Illustrative example of subject matter classified in this group: US2007164176

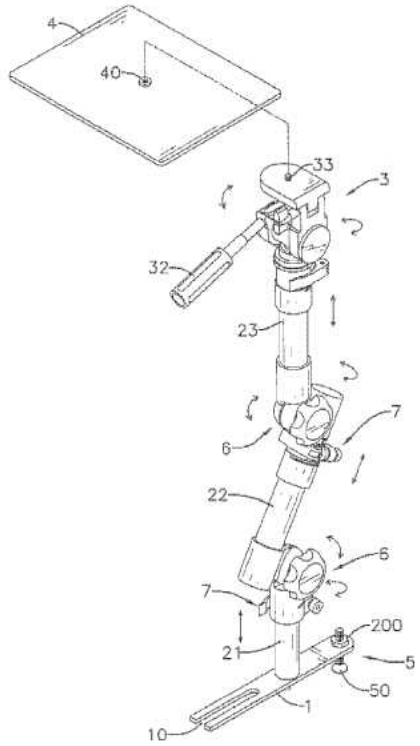

Special rules of classification

F16M 11/2035 takes precedence over F16M 11/2014 and F16M 11/2021

F16M 11/2057

{for tilting and rolling (F16M 11/2078 takes precedence)}

Special rules of classification

F16M 11/2078 takes precedence

F16M 11/2064

{for tilting and panning (F16M 11/2078 takes precedence)}

Definition statement

This place covers:

Illustrative example of subject matter classified in this group: US2007217134

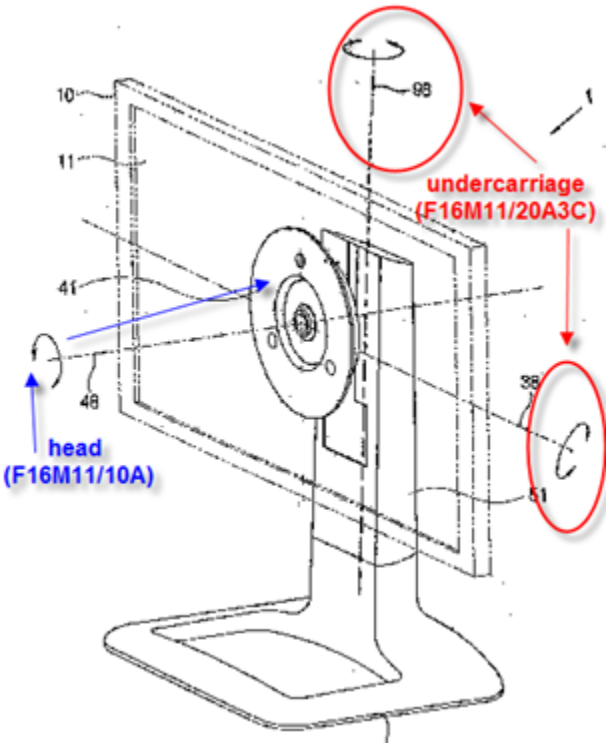

Special rules of classification

F16M 11/2078 takes precedence

F16M 11/2071

{for panning and rolling (F16M 11/2078 takes precedence)}

Definition statement

This place covers:

F16M 11/2078 takes precedence

F16M 11/2078

{with ball-joint (ball-jointed hinges F16C 11/06)}

Definition statement

This place covers:

Illustrative example of subject matter classified in this group: US2006237608

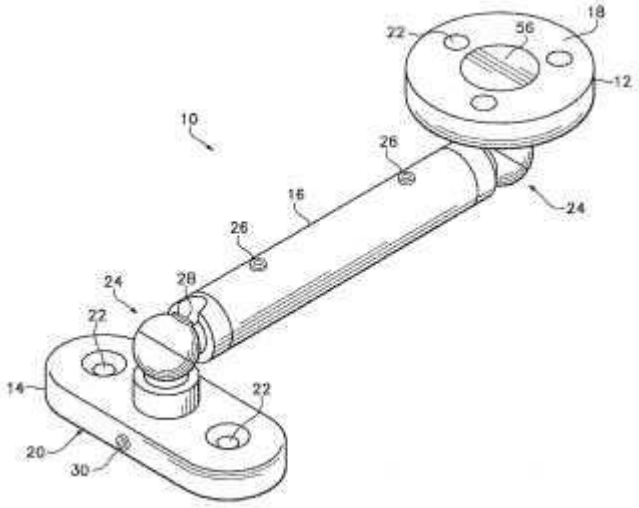

References

Limiting references

This place does not cover:

Ball-jointed hinges	F16C 11/06

Special rules of classification

F16M 11/2078 takes precedence over F16M 11/2057, F16M 11/2064 and F16M 11/2071

F16M 11/2092

{comprising means allowing depth adjustment, i.e. forward-backward translation of the head relatively to the undercarriage}

Definition statement

This place covers:

Illustrative example of subject matter classified in this group: EP2108180

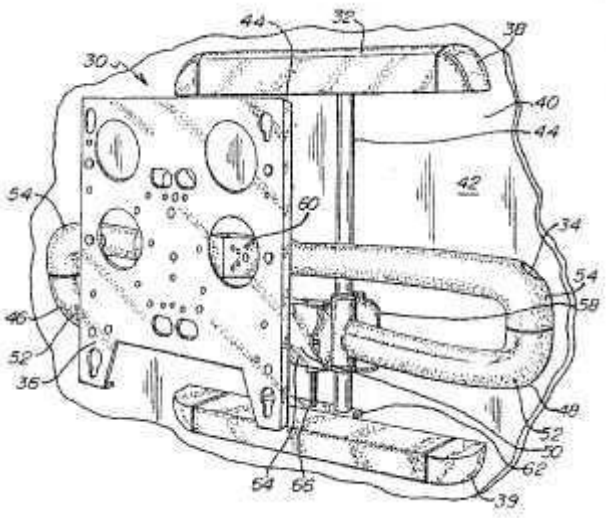

and: US2009050763

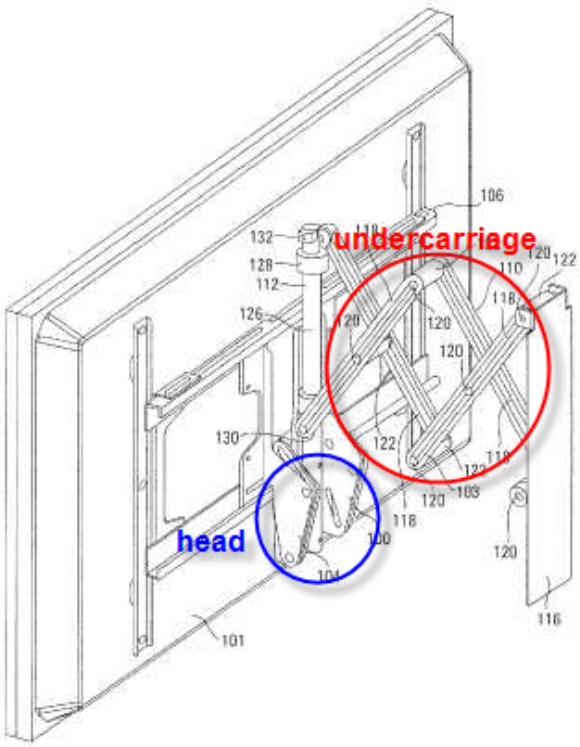

F16M 11/22

with approximately constant height, e.g. with constant length of column or of legs (F16M 11/42 takes precedence)

Special rules of classification

F16M 11/42 takes precedence.

See also F16M 11/00 and F16M 11/20.

Here are supports with monolithic undercarriage not allowing any movement. Other details of this undercarriage should be classified under F16M 2200/08.

F16M 11/24

changeable in height or length of legs, also for transport only, {e.g. by means of tubes screwed into each other} (F16M 11/42 takes precedence)

Definition statement

This place covers:

Illustrative example of subject matter classified in this group: US2008302926

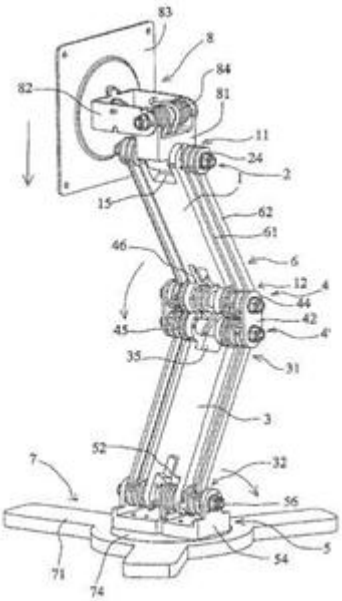

F16M 11/242

{by spreading of the legs (F16M 11/32 takes precedence)}

Definition statement

This place covers:

Duopod or bipod, and supports having more than three legs not having telescopic legs.

Illustrative example

WO2009125194

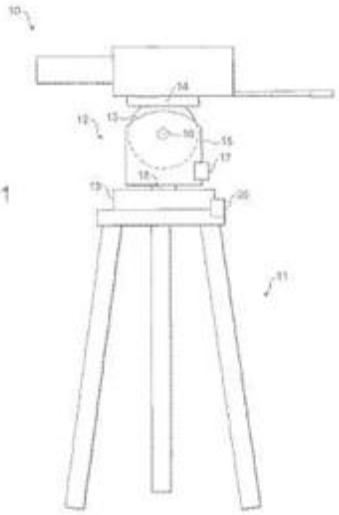

Special rules of classification

F16M 11/32 takes precedence.

F16M 11/245

{Members limiting spreading of legs, e.g. "umbrella legs" (for supports with three or more telescoping legs F16M 11/34)}

Definition statement

This place covers:

Illustrative example of subject matter classified in this group

in the drawing of document EP2315552 here below, the circle is showing the "umbrella legs" construction.

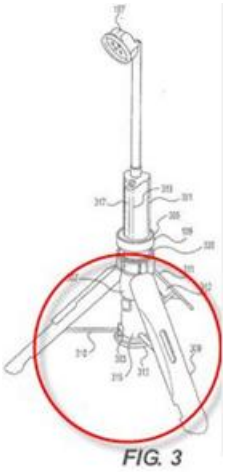

Special rules of classification

For supports with three or more telescoping legs: F16M 11/34 takes precedence.

F16M 11/247

{Members preventing slipping of the feet (for supports with three or more telescoping legs F16M 11/36)}

Special rules of classification

For supports with three or more telescoping legs: F16M 11/36 takes precedence.

F16M 11/26

by telescoping, with or without folding (details concerning the constructional features of telescoping parts only F16B 7/10)

Definition statement

This place covers:

Contains bipod

Illustratvie example: US2006278797

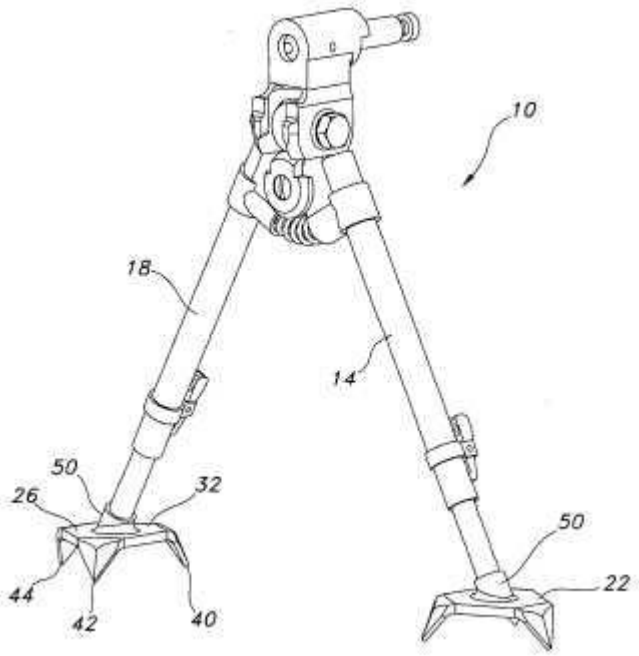

Relationships with other classification places

Locking of telescopic tubes: F16B 7/10 F16B 7/14 F16B 2007/16

F16M 11/28

Undercarriages for supports with one single telescoping pillar

Definition statement

This place covers:

contains monopod (illustrative example: US5458306)

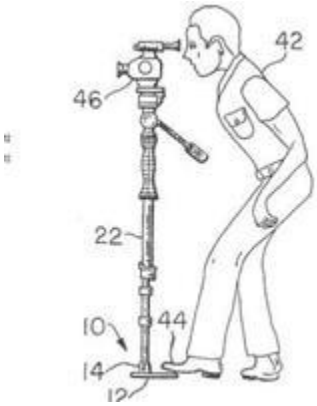

or stand having one single telescopic column. The foot can be a tripod (with telescopic legs or not) and the single telescopic column can be the central column. Example: US2005092878

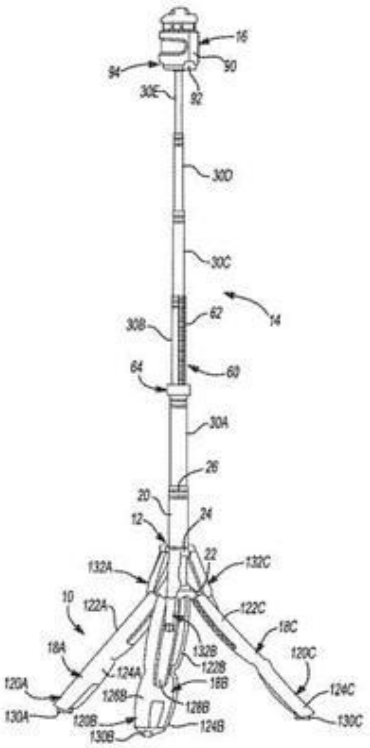

and: US2011079692

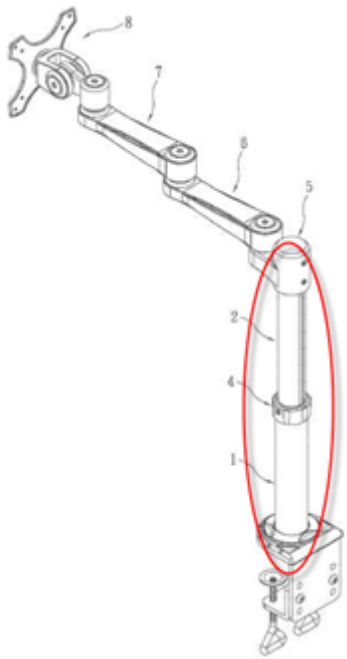

F16M 11/30

with co-moving side-struts

Definition statement

This place covers:

Illustrative example of subject matter classified in this group: US2008087775

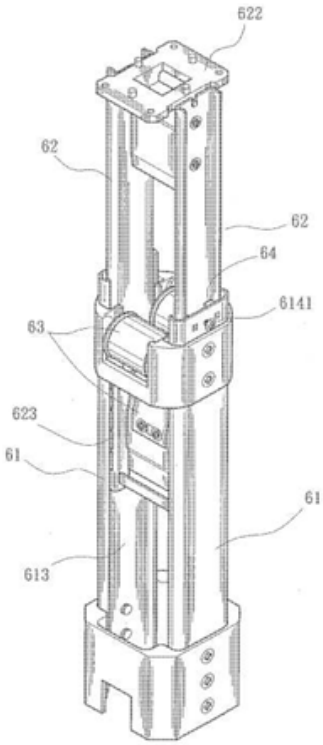

F16M 11/32

Undercarriages for supports with three or more telescoping legs

Definition statement

This place covers:

Only tripod or supports having more than three legs and having telescopic legs as the title reads are classified here.

Special rules of classification

F16M 11/32 takes precedence over F16M 11/242

F16M 11/34

Members limiting spreading of legs, {e.g. "umbrella legs"}

Definition statement

This place covers:

Illustrative example of subject matter classified in this group: WO2010111544

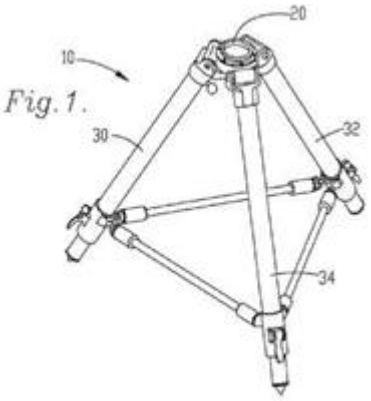

Special rules of classification

F16M 11/34 takes precedence over F16M 11/245

F16M 11/36

Members preventing slipping of the feet

Special rules of classification

F16M 11/36 takes precedence over F16M 11/247

F16M 11/38

by folding, {e.g. pivoting or scissors tong mechanisms}

Definition statement

This place covers:

Undercarriage that can be folded for e.g. transportation needs, see illustrative example: US2011114805 (here the head is element 50 and the first pivot under 50, the rest (30) is the undercarriage)

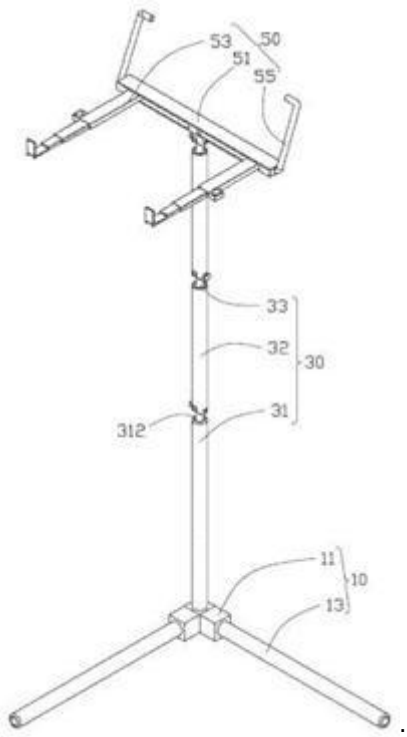

.

and: WO2010024538 (here the head is the connection with the plate 10, and the undercarriage the rest)

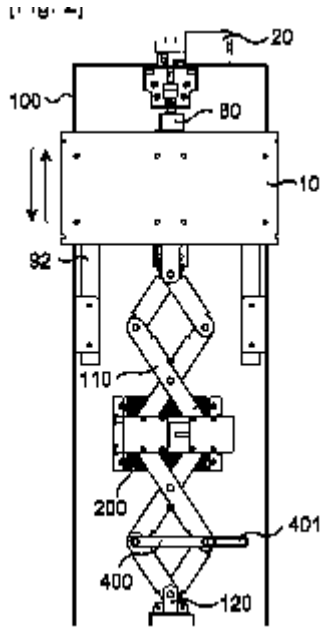

F16M 11/40

by means of coilable or bendable legs {or spiral shaped legs}

Definition statement

This place covers:

Illustrative example of subject matter classified in this group: US2010301188

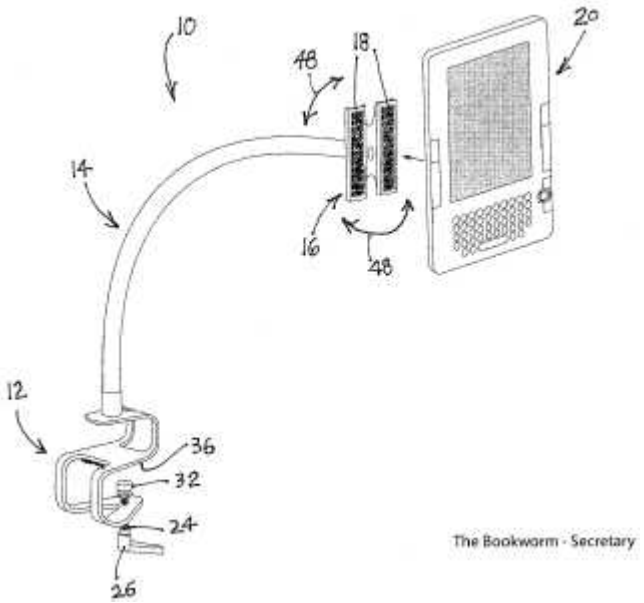

and: US2010220992

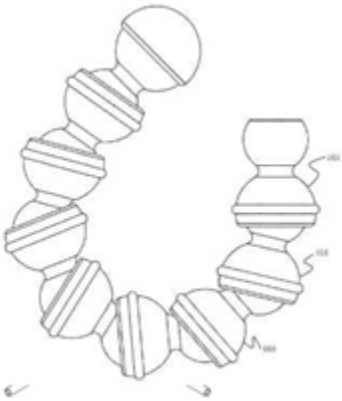

F16M 11/42

with arrangement for propelling the support {stands on wheels}

Definition statement

This place covers:

Illustrative example of subject matter classified in this group: DE102008047898

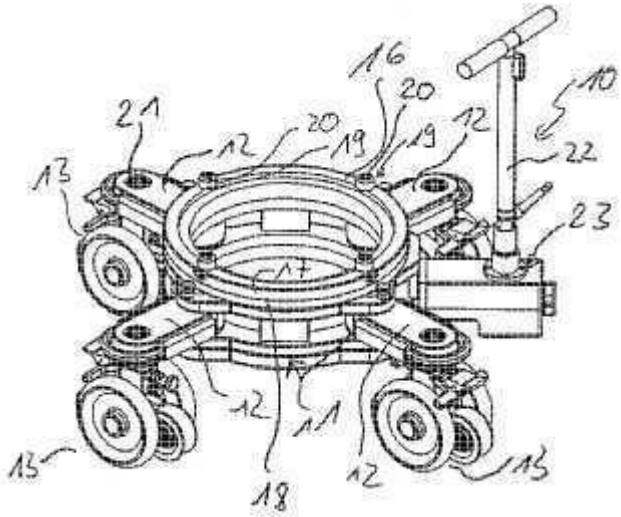

and: DE102007020980

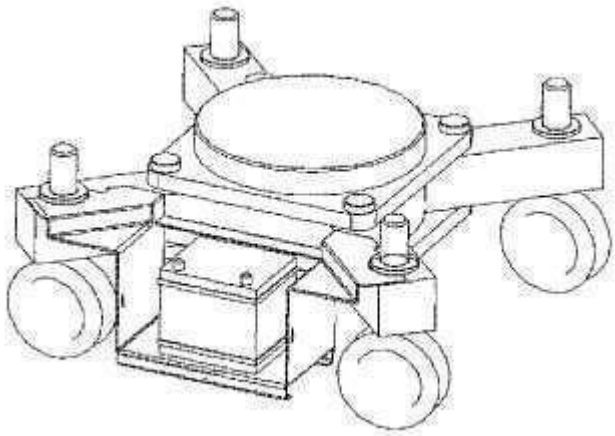

References

Informative references

Attention is drawn to the following places, which may be of interest for search:

Rollers in general	B60B 33/06
Dolly	B62B 3/00
Rollers for containers	B65D 90/18
Camera attached to hanging cables	H04N 5/225, B66C 13/085

F16M 11/425

{along guiding means}

Definition statement

This place covers:

Illustrative example of subject matter classified in this group: US2009315288

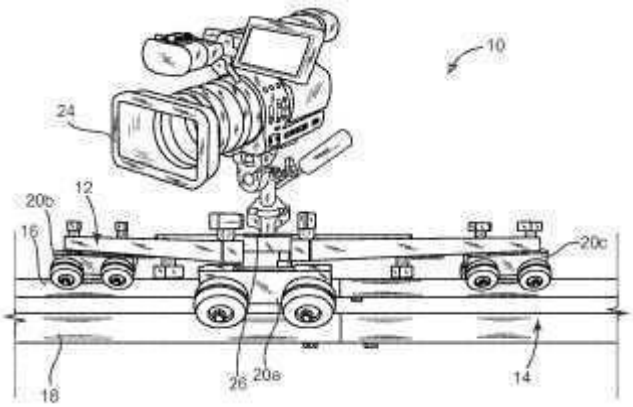

and: EP2115342

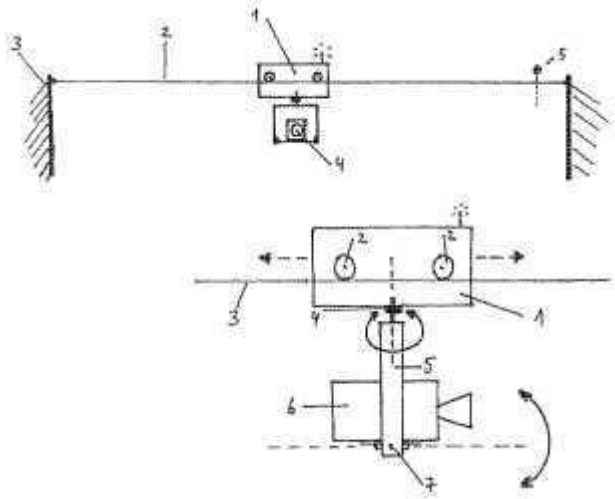

F16M 13/00

Other supports for positioning apparatus or articles (heads thereof F16M 11/02; {undercarriages thereof F16M 11/20} ; adapted to be stuck in the ground A45F 3/44; {sockets or holders for poles or posts E04H 12/22}); Means for steadying hand-held apparatus or articles {(supports for measuring instruments G01D 11/30; supports for casings of remote control switching devices H01H 9/025)}

Definition statement

This place covers:

In F16M 13/00, the objects to be supported are hand-held apparatus (e.g. pda, tablet, gps, small portable screens, radio) and these objects are lying or resting on a support. The supports need also to be hand held support. A heavy tripod for a camera (which is a handheld apparatus) is not classified in F16M 13/00 and depending lower groups as this support is not handheld. A support classified in F16M 13/00 can also be classified in F16M 13/022, e.g. a support provided with suction cup for a GPS apparatus.

This group only contains support separated from the object to be supported contrary to F16M 13/005 and only support for handheld apparatus.

Illustrative example: US2009230161

References

Informative references

Attention is drawn to the following places, which may be of interest for search:

Adapted to be stuck on the ground	A45F 3/44
Holder for fastening hand article, attached to the garment	A45F 5/02
Book or Notebook rest holder	A47B 23/042
Show stands	A47F
Sockets or holders for poles or posts	E04H 12/22
Supports for measuring instruments	G01D 11/30
Docking station for laptop	G06F 1/1632
Pager with belt clip	G08B 3/1058, H04B 1/088
Supports for casings of remote control switching devices	H01H 9/025

Special rules of classification

For more details of how to classify in F16M 11/00, F16M 13/00 and F16M 2200/00 see the Special Rules of Classification of the main group F16M 11/00.

Detail of the head is to be classified in F16M 11/02.

Detail of the undercarriage is to be classified in F16M 11/20.

F16M 13/005

{integral with the apparatus or articles to be supported}

Definition statement

This place covers:

The support is integrated in the object.

For support integrated in the object see the illustrative example: US2009314915

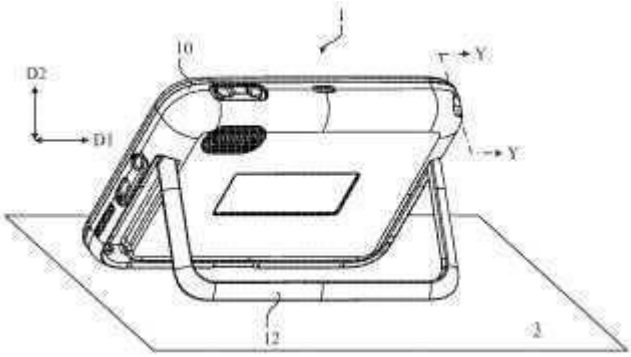

and: US2010133414

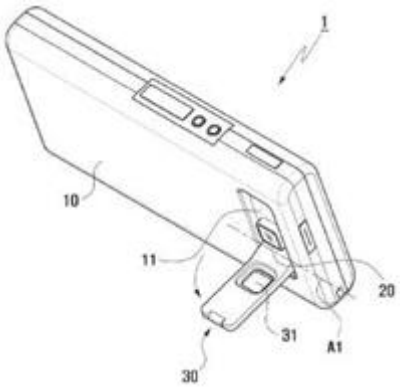

Special rules of classification

The possible movements allowed by this support should still be classified under the head groups (F16M 11/02 and lower groups) and if necessary under the undercarriage groups (F16M 11/20 and lower groups).

F16M 13/02

for supporting on, or attaching to, an object, e.g. tree, gate, window-frame, cycle

Definition statement

This place covers:

The supports are attached to a wall or at another object like e.g. a post.

Support attached to the wall, see the illustrative example: WO2011003115

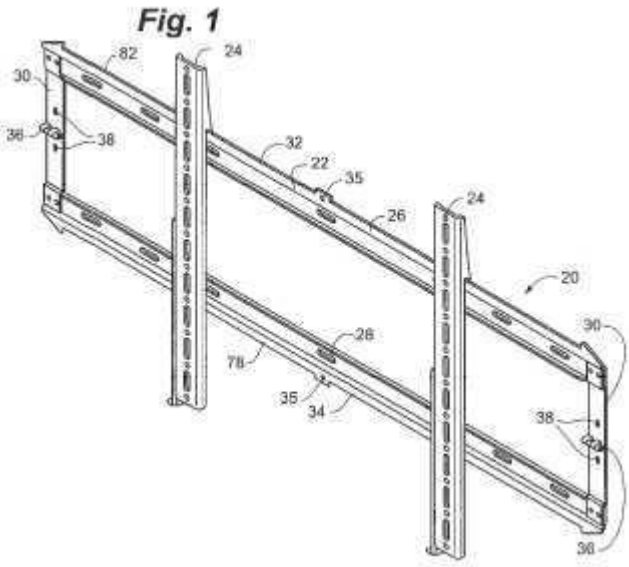

References

Informative references

Attention is drawn to the following places, which may be of interest for search:

Holding, supporting or positioning device removable from a machine tools	B23Q 3/00

Clamps	F16B 2/02
Suction cups	F16B 47/00
Pager with belt clip	G08B 3/1058, H04B 1/088

F16M 13/022

{repositionable}

Definition statement

This place covers:

Supports easily repositionable using e.g. clamps; see the illustrative example: US2010264281

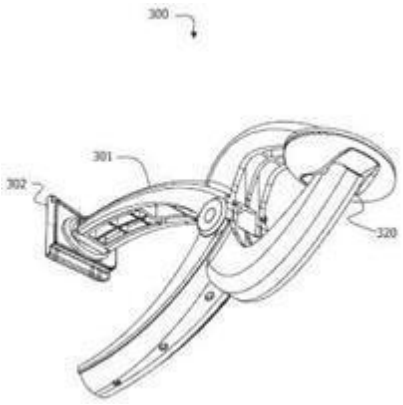

or suction cups: US2011/0024587

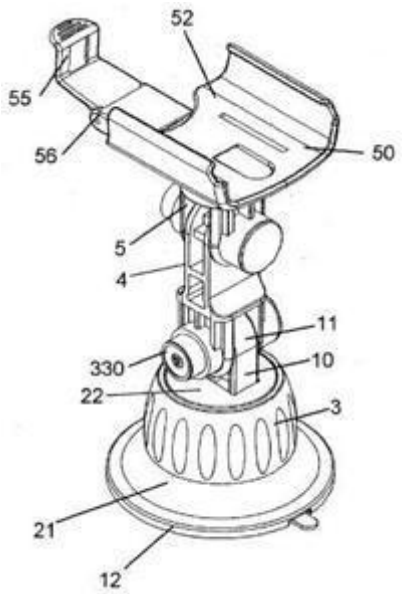

F16M 13/027

{Ceiling supports}

Definition statement

This place covers:

See the illustrative example: EP2288960

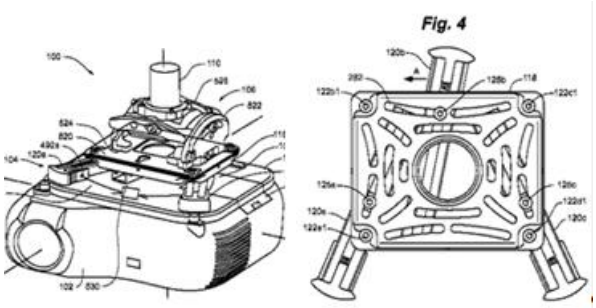

F16M 13/04

for supporting on, or holding steady relative to, a person, e.g. by chains, {e.g. rifle butt or pistol grip supports, supports attached to the chest or head (apparatus or arrangements for taking photographs or for projecting or viewing them G03B)}

Definition statement

This place covers:

Illustrative example of subject matter classified in this group: US2010254696

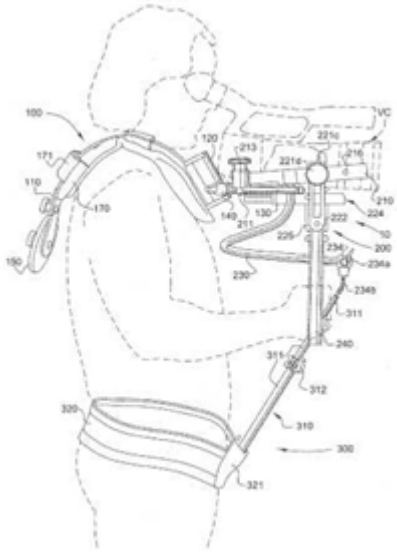

References

Informative references

Attention is drawn to the following places, which may be of interest for search:

Holder for fastening hand article, attached to the garment	A45F 5/02

Goggles	G02C
Apparatus or arrangement for taking photographs or for projecting or viewing them	G03B
Details of accessories for cameras	G03B 17/56
Pager with belt clip	G08B 3/1058, H04B 1/088