F01D

NON-POSITIVE DISPLACEMENT MACHINES OR ENGINES, e.g. STEAM TURBINES (machines or engines for liquids F03; non-positive displacement pumps F04D)

Definition statement

This place covers:

- Non-positive-displacement engines for elastic fluids, e.g. steam turbines,
- Non-positive-displacement engines for liquids and elastic fluids,
- Non-positive-displacement machines for elastic fluids,
- Non-positive-displacement machines for liquids and elastic fluids.

References

Limiting references

This place does not cover:

Machines or engines for liquids	F03
Non-positive-displacement pumps	F04D

Special rules of classification

In this subclass the indexing scheme F05D is used as follows:

F05D 2200/00: mathematical features

F05D 2210/00: working fluid

F05D 2220/00: application

F05D 2230/00: manufacture

F05D 2240/00:components

F05D 2250/00: geometry

F05D 2260/00: function

F05D 2270/00: control

F05D 2300/00: materials

F01D 1/00

Non-positive-displacement machines or engines, e.g. steam turbines (wit working-fluid flows in opposite axial directions for balancing axial thrust F01D 3/02; with other than pure rotation F01D 23/00; turbines characterised by their use in special steam systems, cycles, or processes, regulating devices therefor F01K)

Definition statement

This place covers:

Non-positive-displacement machines or engines, e.g. steam turbines: i.e. machine or engine that uses an impeller or propeller and through which fluid is moved

Relationships with other classification places

Machines or engines with working-fluid flows in opposite axial directions for balancing axial thrust F01D 3/02, with other than pure rotation F01D 23/00, turbines characterised by their use in special steam systems, cycles, or processes, regulating devices therefor F01K

References

Limiting references

This place does not cover:

Machines or engines with working-fluid flows in opposite axial directions for balancing axial thrust	F01D 3/02
Machines or engines with other than pure rotation	F01D 23/00
Turbines characterised by their use in special steam systems, cycles, or processes, regulating devices therefor	F01K

F01D 1/02

with stationary working-fluid guiding means and bladed or like rotor, {e.g. multi-bladed impulse steam turbines} (F01D 1/24 takes precedence; without stationary working-fluid guiding means F01D 1/18)

References

Limiting references

This place does not cover:

Machines or engines without stationary working-fluid guiding means	F01D 1/18

Special rules of classification

F01D 1/24 takes precedence

F01D 1/32

with pressure velocity transformation exclusively in rotor, e.g. the rotor rotating under the influence of jets issuing from the rotor, {e.g. Heron turbines (the working fluid being a combustion products F02C 3/165; jet propulsion plants per se F02K)}

Definition statement

This place covers:

Aspects of working fluid being guided through a rotor construction such that the action of the expelled working fluid jet creates a reaction on the rotor, i.e. a turning motion is induced upon the rotor

References

Limiting references

This place does not cover:

The working fluid being a combustion product	F02C 3/165
Jet propulsion plants per se	F02K

Special rules of classification

Illustrative example of subject matter classified in F01D 1/32

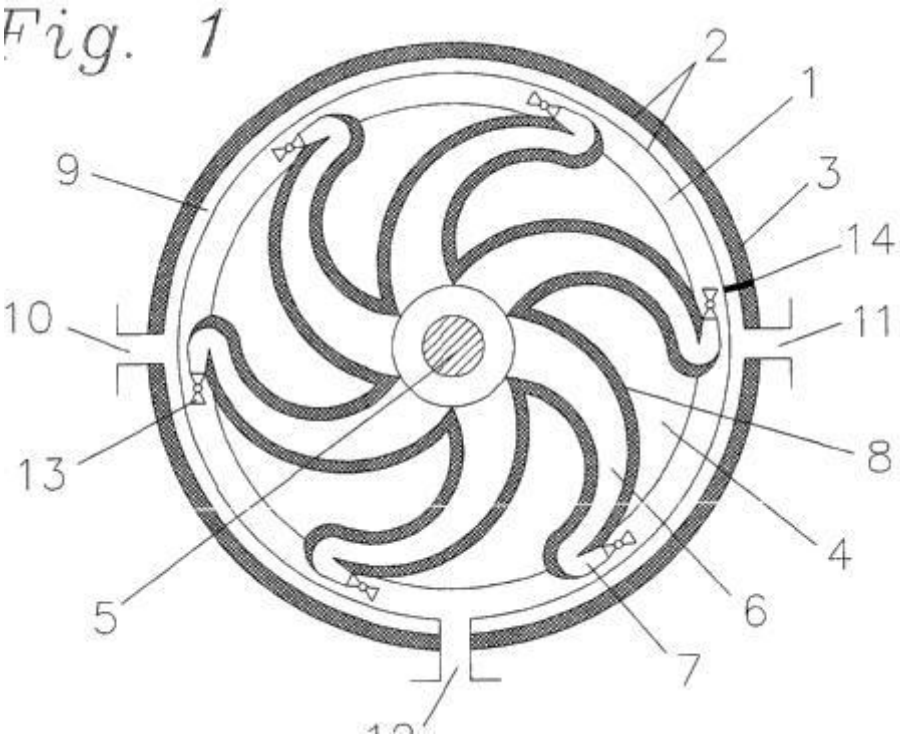

taken from DE102009005872

F01D 1/36

using fluid friction

Definition statement

This place covers:

Aspects of extracting power from working fluid by making use of the viscous forces within the fluid, usually by the provision of a stack of closely arranged plates through which the working fluid is forced, such as e.g. a Tesla turbine

Special rules of classification

Illustrative example of subject matter classified in F01D 1/36

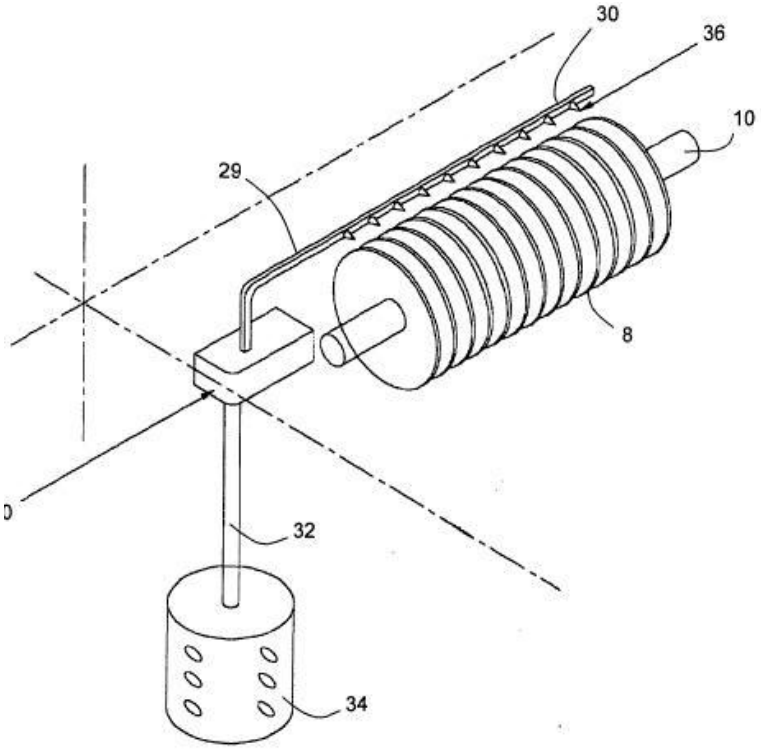

taken from WO2009150427

F01D 1/38

of the screw type

Special rules of classification

Illustrative example of subject matter classified in F01D 1/38

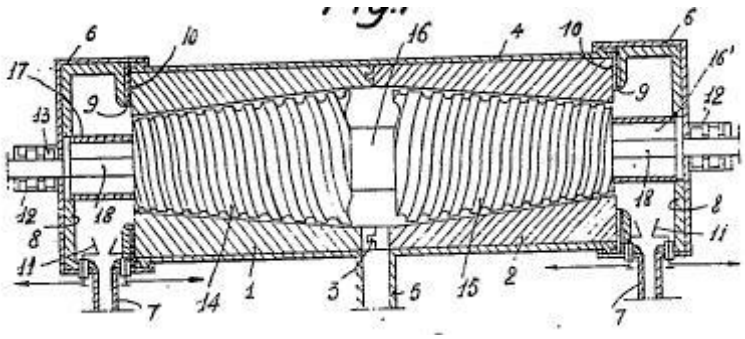

taken from FR937311

F01D 3/02

characterised by having one fluid flow in one axial direction and another fluid flow in the opposite direction

Special rules of classification

Illustrative example of subject matter classified in F01D 3/02

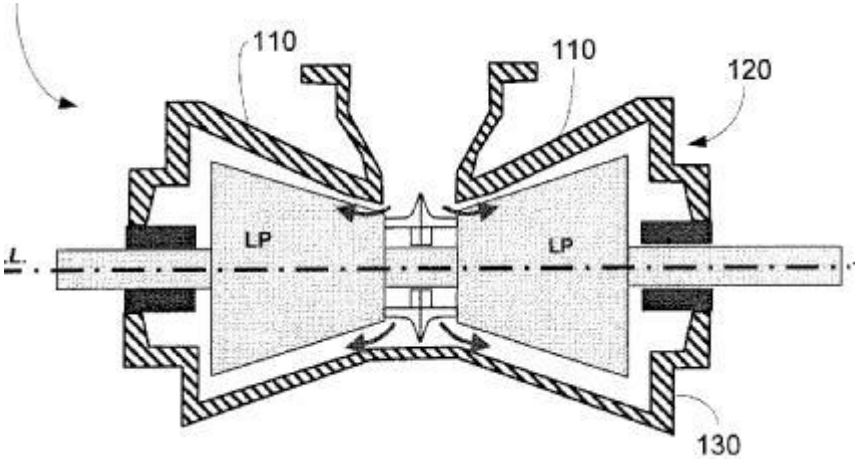

taken from FR937311

F01D 3/04

axial thrust being compensated by thrust-balancing dummy piston or the like

Special rules of classification

Illustrative example of subject matter classified in F01D 3/04

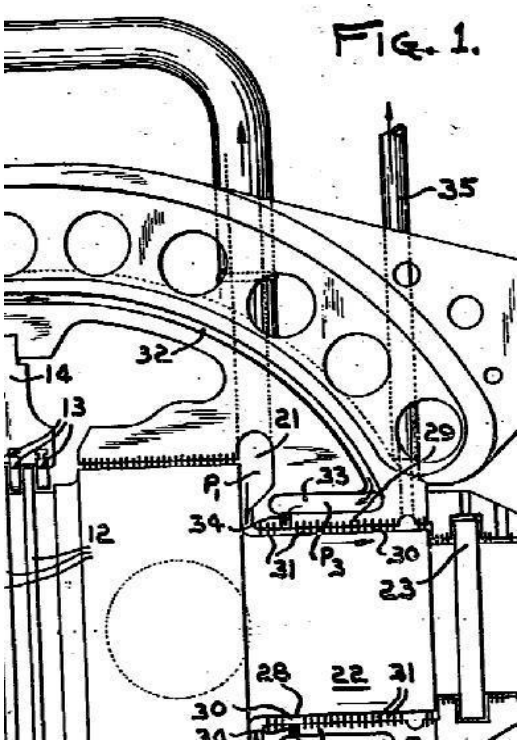

taken from US2326112

F01D 5/00

Blades; Blade-carrying members (nozzle boxes F01D 9/02); Heating, heat-insulating, cooling or anti-vibration means on the blades or the members {(special arrangements in rotors dealing with breaking off of part thereof F01D 21/045)}

References

Informative references

Attention is drawn to the following places, which may be of interest for search:

Nozzle boxes	F01D 9/02
Special arrangements in rotors dealing with breaking off of part thereof	F01D 21/045

F01D 5/005

{Repairing methods or devices}

References

Informative references

Attention is drawn to the following places, which may be of interest for search:

Restoring or reconditioning fractured or cracked metal turbine components, e.g. blades or rotors	B23P 6/045
Maintenance management and planing of maintenance routines	G05B 23/00

F01D 5/021

{for flow machines or engines with only one axial stage (for more than one stage F01D 5/06)}

References

Informative references

Attention is drawn to the following places, which may be of interest for search:

For more than one stage	F01D 5/06

Special rules of classification

Illustrative example of subject matter classified in F01D 5/021

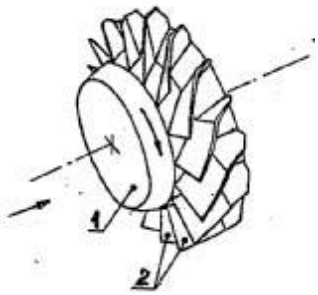

taken from GB944166

F01D 5/022

{with concentric rows of axial blades}

Special rules of classification

Illustrative example of subject matter classified in F01D 5/022

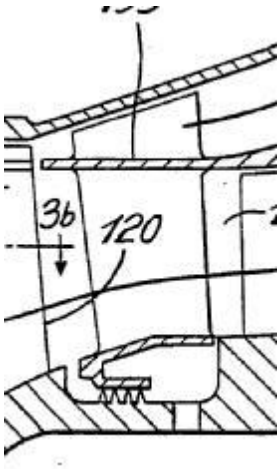

taken from US6578351

F01D 5/023

{of the screw type}

Special rules of classification

Illustrative example of subject matter classified in F01D 5/023

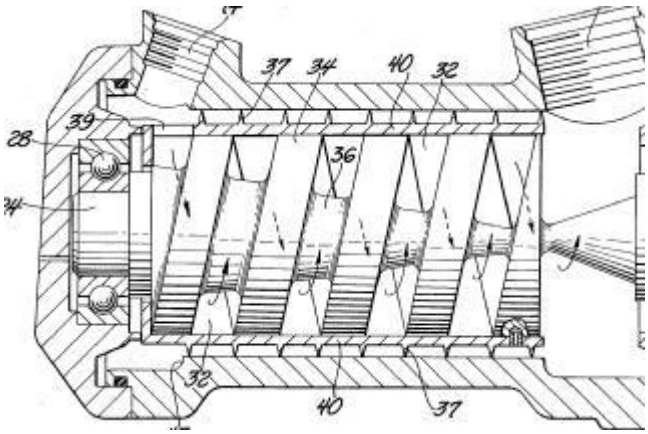

taken from US4500254

F01D 5/025

{Fixing blade carrying members on shafts (attachment of a member on a shaft in general F16D 1/06; for non-positive displacement pumps F04D 29/00)}

References

Informative references

Attention is drawn to the following places, which may be of interest for search:

For non-positive displacement pumps	F04D 29/00
Attachment of a member on a shaft in general	F16D 1/06

Special rules of classification

Illustrative example of subject matter classified in F01D 5/025

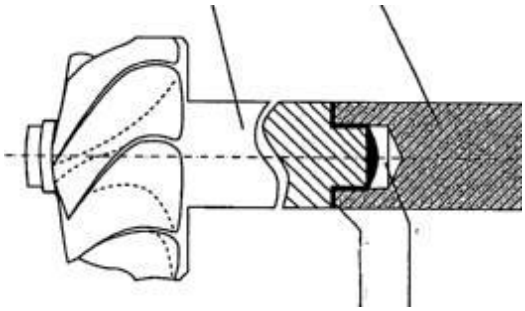

taken from US2010297468

F01D 5/026

{Shaft to shaft connections}

Special rules of classification

Illustrative example of subject matter classified in F01D 5/026

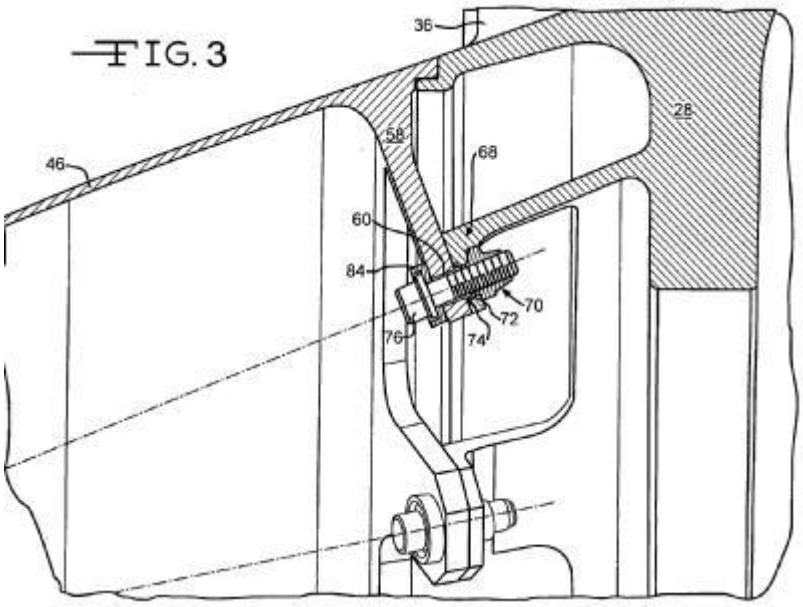

taken from US2010226786

F01D 5/028

{the rotor disc being formed of sheet laminae (rotor blade aggregates of unitary construction F01D 5/34)}

Definition statement

This place covers:

Rotor discs which are made by stacking several sheets of metallic or composite plate like elements together and attaching them to each other, e.g. by gluing or clamping in order to form a single rotor disk or a stacked rotor assembly.

References

Informative references

Attention is drawn to the following places, which may be of interest for search:

Rotor blade aggregates of unitary construction such as bladed disks (BLISKS) or other integrally manufactured rotor and disc arrangements, e.g. machined from a billet, manufactured by composite materials or manufactured individually and finally joined to a non separable unit, e.g. by friction welding	F01D 5/34

Special rules of classification

Illustrative example of subject matter classified in F01D 5/028

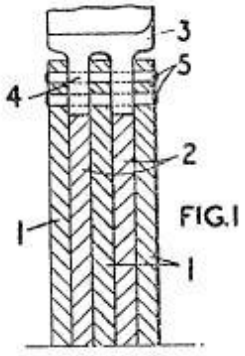

taken from GB630395

F01D 5/03

Annular blade-carrying members having blades on the inner periphery of the annulus and extending inwardly radially, i.e. inverted rotors

Special rules of classification

Illustrative example of subject matter classified in F01D 5/03

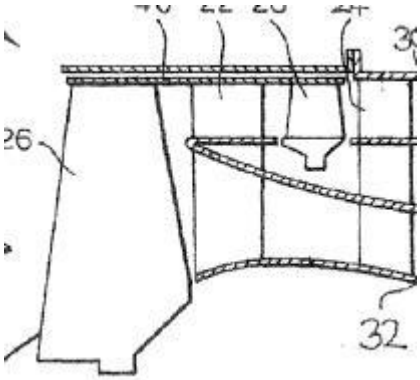

taken from US2006016172

F01D 5/04

for radial-flow machines or engines

Special rules of classification

Illustrative example of subject matter classified in F01D 5/04

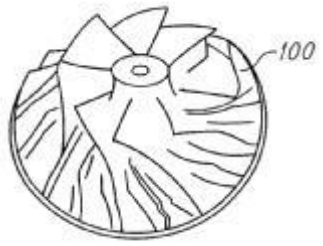

taken from JP59113202

F01D 5/041

{of the Ljungström type}

Definition statement

This place covers:

Ljungström type machines in which the working fluid usually flows radially outwardly between two counter rotating bladed plates or more generally speaking turbines in which the fluid is expanded in a radial direction passing through consecutive turbine stages, wherein the turbine blades are mounted in circular alternating rows on plate like structures

Special rules of classification

Illustrative example of subject matter classified in F01D 5/041

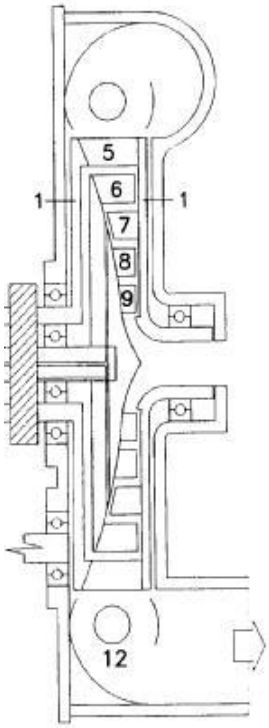

taken from EP811752

F01D 5/045

{the wheel comprising two adjacent bladed wheel portions, e.g. with interengaging blades for damping vibrations}

Special rules of classification

Illustrative example of subject matter classified in F01D 5/045

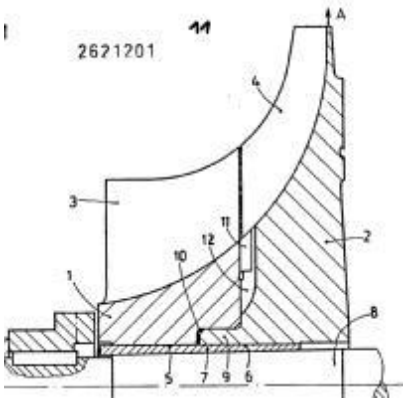

taken from US4183719

F01D 5/16

for counteracting blade vibration

Definition statement

This place covers:

All aspects of blade vibration and countermeasures thereof if related to the blade itself and its construction

References

Informative references

Attention is drawn to the following places, which may be of interest for search:

Measuring mechanical vibrations	G01H

Special rules of classification

Illustrative example of subject matter classified in F01D 5/16

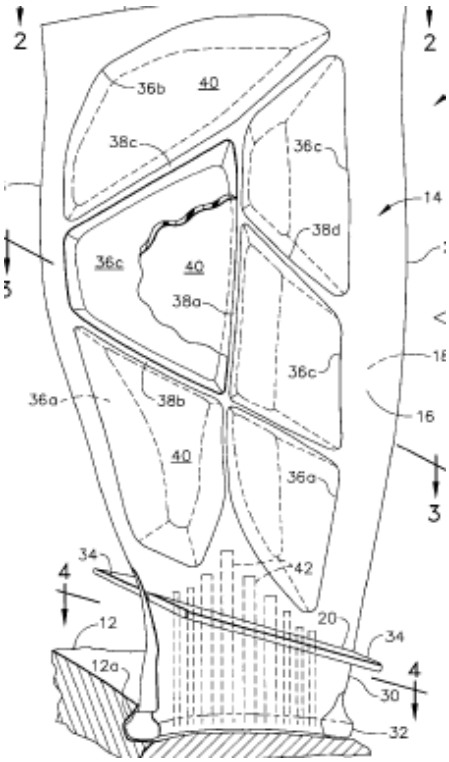

taken from US6033186

F01D 5/186

{Film cooling (F01D 5/187 takes precedence)}

Definition statement

This place covers:

All aspects of film cooled blades, arrangement and shape of film cooling holes

Special rules of classification

Illustrative example of subject matter classified in F01D 5/186

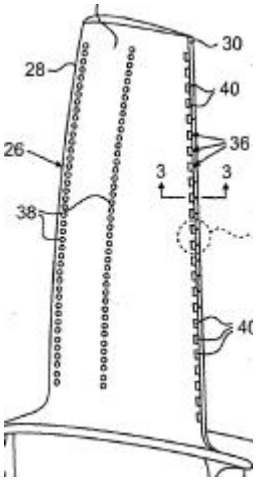

taken from EP2267276

Glossary of terms

In this place, the following terms or expressions are used with the meaning indicated:

Shower head (cooling)	ditto
Film cooling	expression used in order to describe the cooling technology used in order to cool a blade with an external layer of coolant

F01D 5/187

{Convection cooling}

Special rules of classification

Illustrative example of subject matter classified in F01D 5/187

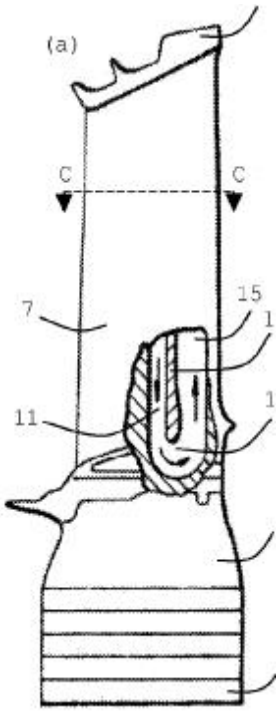

taken from EP2299058

F01D 5/188

{with an insert in the blade cavity to guide the cooling fluid, e.g. forming a separation wall}

Special rules of classification

Illustrative example of subject matter classified in F01D 5/188

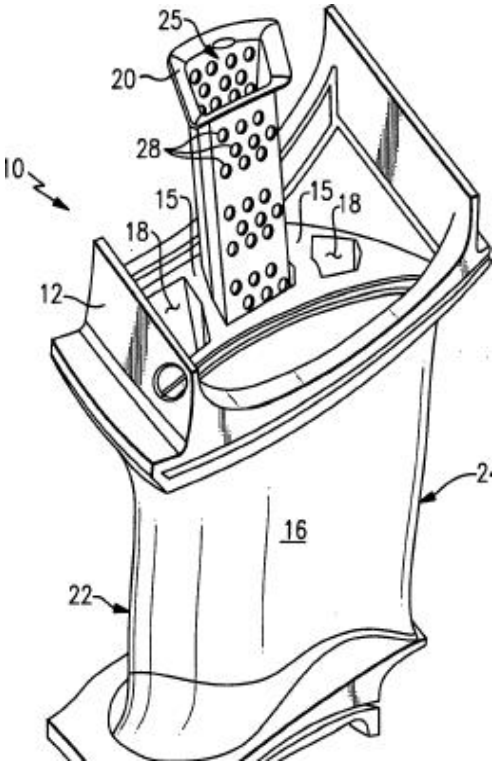

taken from EP2107214

F01D 5/189

{the insert having a tubular cross-section, e.g. airfoil shape}

Special rules of classification

Illustrative example of subject matter classified in F01D 5/189

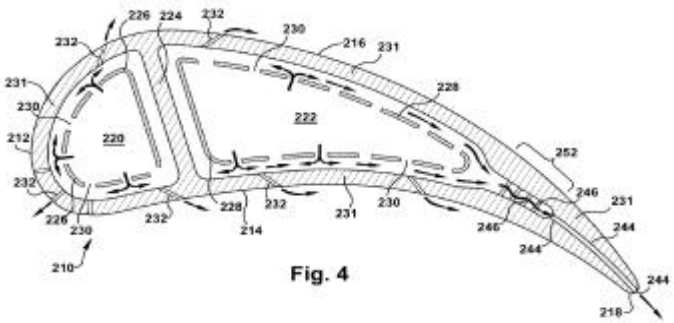

Fig. 4

taken from US2010124499

F01D 5/20

Specially-shaped blade tips to seal space between tips and stator {(F01D 5/225 takes precedence)}

Special rules of classification

Illustrative example of subject matter classified in F01D 5/20

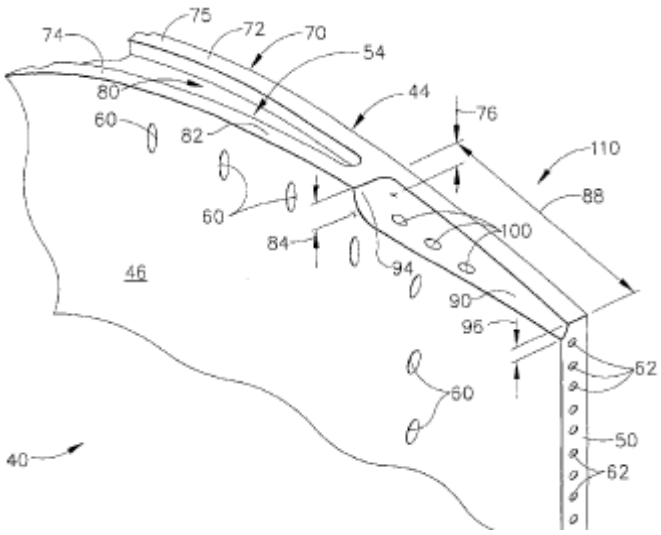

taken from EP1367222

F01D 5/22

Blade-to-blade connections, {e.g. for damping vibrations}

References

Informative references

Attention is drawn to the following places, which may be of interest for search:

In combination with seals	F01D 11/005 and lower subclasses

Special rules of classification

Illustrative example of subject matter classified in F01D 5/22

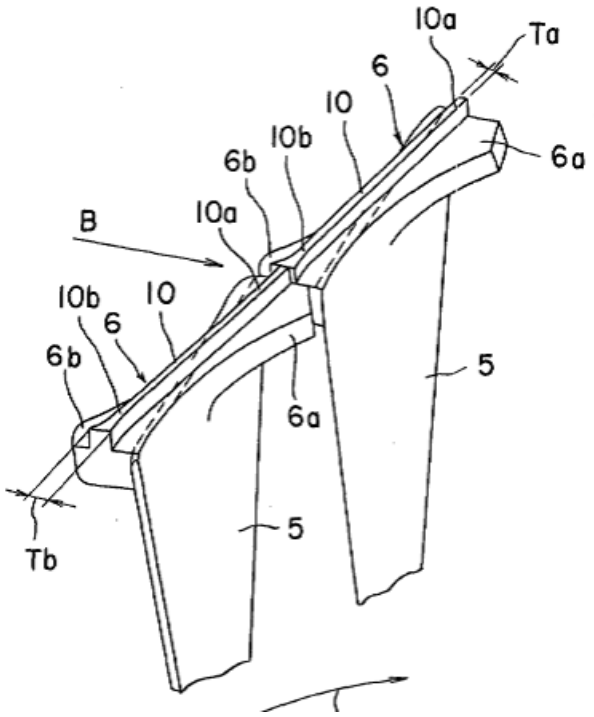

taken from US6402474

F05D 2260/96

allocate this Indexing Code if document is addressing vibrations and damping thereof

F01D 5/24

using wire or the like

Special rules of classification

Illustrative example of subject matter classified in F01D 5/24

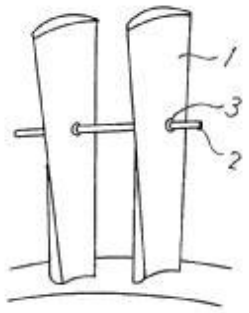

taken from JP59108804

F01D 5/26

Antivibration means not restricted to blade form or construction or to blade-to-blade connections {or to the use of particular materials}

References

Informative references

Attention is drawn to the following places, which may be of interest for search:

Measuring mechanical vibrations	G01H

Special rules of classification

Illustrative example of subject matter classified in F01D 5/26

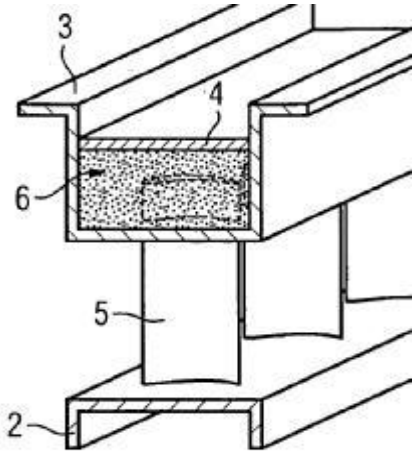

taken from EP1980715

F01D 5/28

Selecting particular materials; {Particular measures relating thereto;} Measures against erosion or corrosion

References

Informative references

Attention is drawn to the following places, which may be of interest for search:

Making articles from metallic powder	B22F

F01D 5/282

{Selecting composite materials, e.g. blades with reinforcing filaments}

Relationships with other classification places

Shaping/repair of composites	B29C

Special rules of classification

Indexing Code-codes for fibers, materials, resin etc. in F05D 2300/00

F01D 5/288

{Protective coatings for blades}

References

Informative references

Attention is drawn to the following places, which may be of interest for search:

Coatings in general	C23C 28/00

Special rules of classification

Composition of the coating(s) is covered by C23C 28/00

F01D 5/3007

{of axial insertion type}

Special rules of classification

Illustrative example of subject matter classified in F01D 5/3007

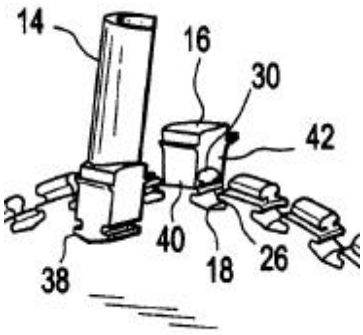

taken from EP2233696

F01D 5/3015

{with side plates}

Special rules of classification

Illustrative example of subject matter classified in F01D 5/3015

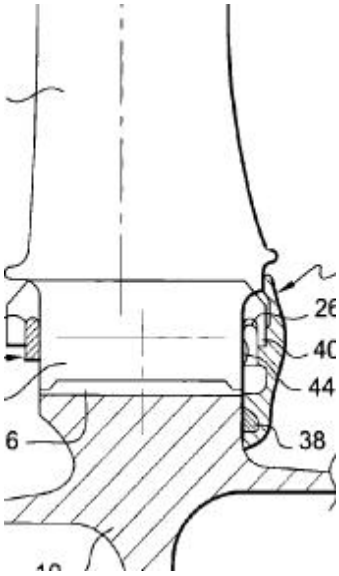

taken from EP1895103

F01D 7/00

Rotors with blades adjustable in operation; Control thereof (for reversing F01D 1/30)

Definition statement

This place covers:

Rotors with blades adjustable in operation, e.g. unshrouded fans with a single rotor or two counter-rotating rotors

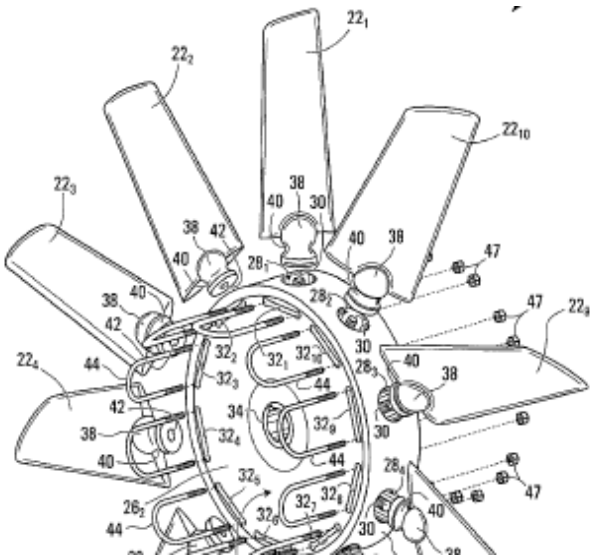

taken from US2006188375

References

Limiting references

This place does not cover:

Rotors for reversing	F01D 1/30

F01D 9/00

Stators (non-fluid guiding aspects of casings, regulating, controlling, or safety aspects, see the relevant groups)

Definition statement

This place covers:

Stators, i.e. stationary fluid guiding arrangements such as nozzles etc

References

Informative references

Attention is drawn to the following places, which may be of interest for search:

Safety	F01D 21/00
Casings	F01D 25/24 and F01D 25/26
Regulation or control	F02C 9/00

F01D 9/047

{Nozzle boxes}

Definition statement

This place covers:

Nozzle boxes, i.e. usually a bladed section of a guiding apparatus with inner and outer shrouds segments that when assembled with several other nozzle boxes results in a stator structure. Two or four nozzle boxes form a complete circular fluid supply assembly

Special rules of classification

Illustrative example of subject matter classified in F01D 9/047

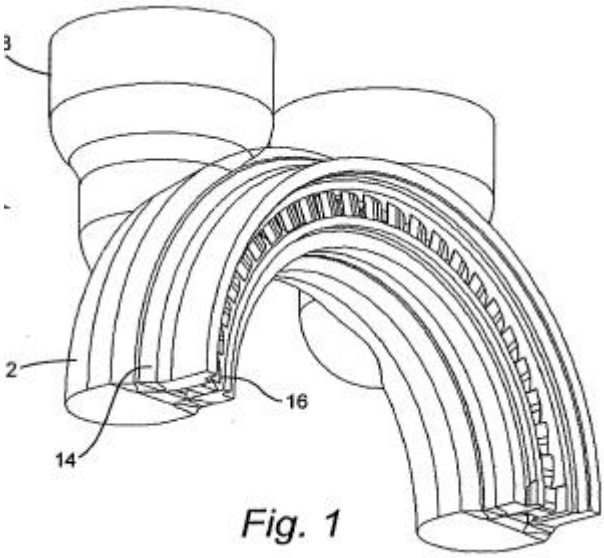

taken from EP1703083

F01D 9/048

{for radial admission}

Definition statement

This place covers:

Nozzles or nozzles boxes forming a ring or a sector and in which working fluid is supplied radially onto a turbine stage or a turbine wheel

Special rules of classification

Illustrative example of subject matter classified in F01D 9/048

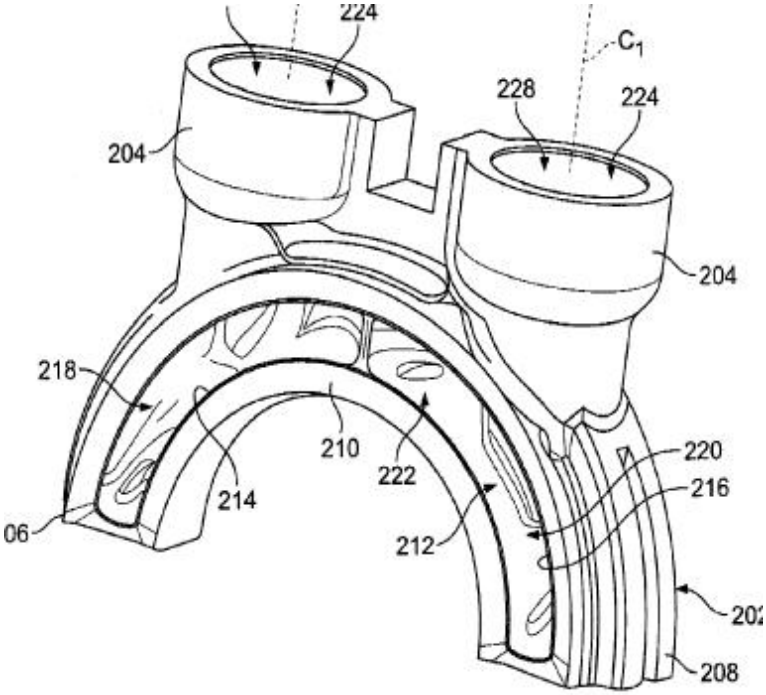

taken from US200805689

F01D 9/06

Fluid supply conduits to nozzles or the like

Definition statement

This place covers:

The fluid conduits themselves, i.e. anything that supplies fluid into the casing of the turbine or ducts fluid around the casing, e.g. from a bleed valve to the user or a hot section of the turbine

Special rules of classification

Illustrative example of subject matter classified in F01D 9/06

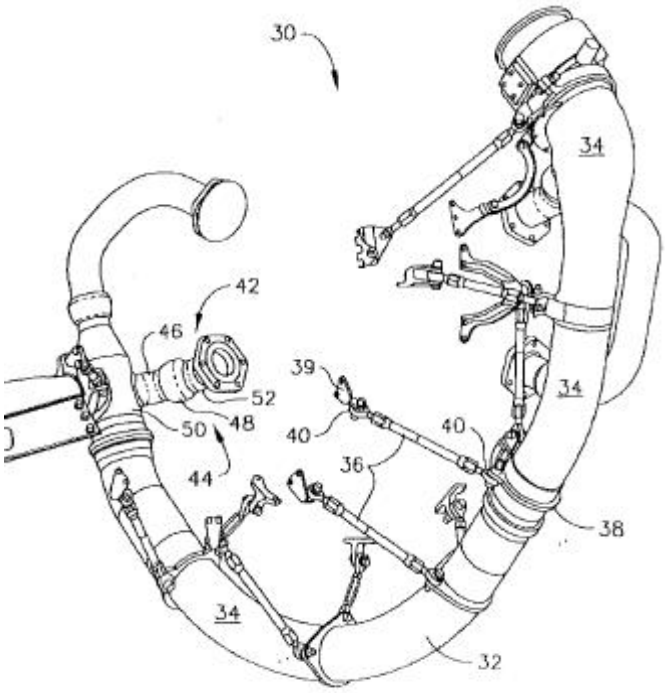

taken from EP967376

F01D 9/065

{Fluid supply or removal conduits traversing the working fluid flow, e.g. for lubrication-, cooling-, or sealing fluids (see also F01D 25/16, F01D 25/24 and F01D 25/26)}

References

Informative references

Attention is drawn to the following places, which may be of interest for search:

Bearings	F01D 25/16
Casings	F01D 25/24
Double casings	F01D 25/26

Special rules of classification

Illustrative example of subject matter classified in F01D 9/065

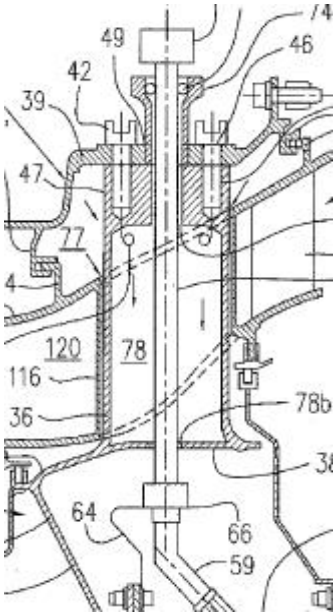

taken from US2010275572

F01D 11/00

Preventing or minimising internal leakage of working-fluid, e.g. between stages (sealings in general F16J {sealing arrangements for transition ducts of combustor cans F01D 9/023})

References

Limiting references

This place does not cover:

Sealing issues related to centrifugal compressors	F04D
Sealing in general	F16J

Informative references

Attention is drawn to the following places, which may be of interest for search:

Sealing arrangements for transition ducts of combustor cans	F01D 9/023

F01D 11/001

{for sealing space between stator blade and rotor}

Special rules of classification

Illustrative example of subject matter classified in F01D 11/00

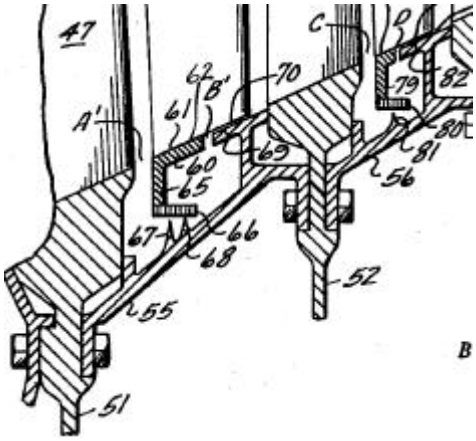

taken from US3146938

F01D 11/003

{by packing rings; Mechanical seals}

Special rules of classification

Illustrative example of subject matter classified in F01D 11/003

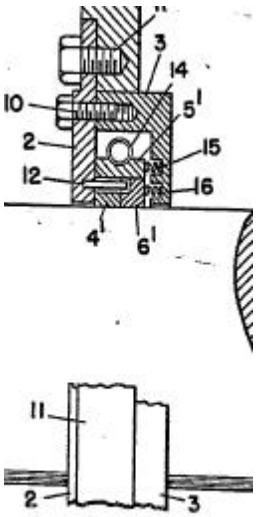

taken from GB866636

F01D 11/20

Actively adjusting tip-clearance

References

Informative references

Attention is drawn to the following places, which may be of interest for search:

Blade tip magnetic field sensors	G01P 3/487

F01D 11/24

by selectively cooling-heating stator or rotor components

Special rules of classification

Illustrative example of subject matter classified in F01D 11/24

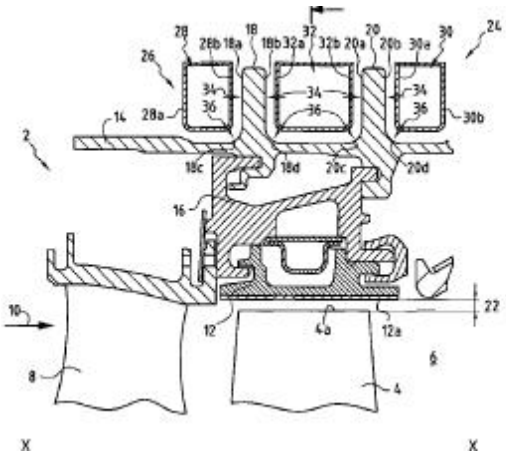

taken from EP1555394

F01D 13/00

Combinations of two or more machines or engines (F01D 15/00 takes precedence; regulating or controlling, see the relevant groups; combinations of two or more pumps F04; fluid gearing F16H)

References

Limiting references

This place does not cover:

Adaptations of machines or engines for special use; Combinations of engines with devices driven thereby	F01D 15/00

Informative references

Attention is drawn to the following places, which may be of interest for search:

Combinations of two or more pumps	F04D
Fluid gearing	F16H

F01D 13/003

{with at least two independent shafts, i.e. cross-compound}

Special rules of classification

Illustrative example of subject matter classified in F01D 13/003

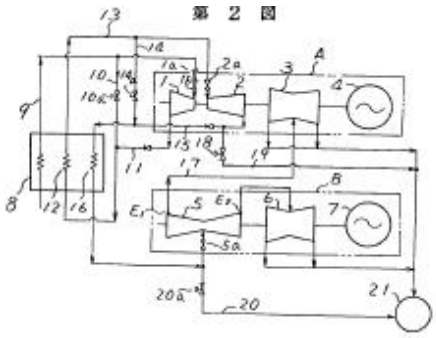

taken from JP359003104

F01D 13/006

{one being a reverse turbine}

Definition statement

This place covers:

Machines or engines containing a separate turbine for reverse operation

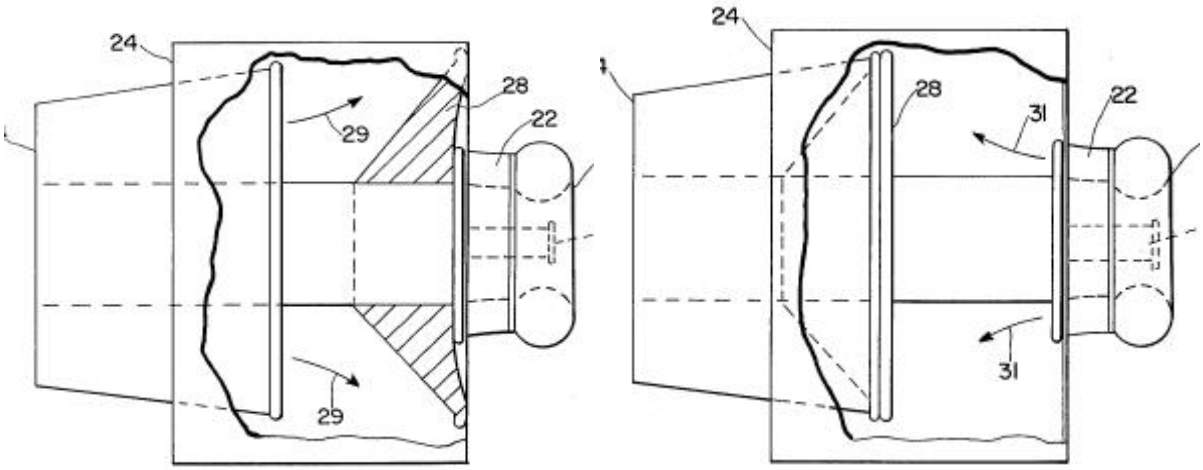

taken from US4245467

F01D 13/02

Working-fluid interconnection of machines or engines

Special rules of classification

Illustrative example of subject matter classified in F01D 13/02

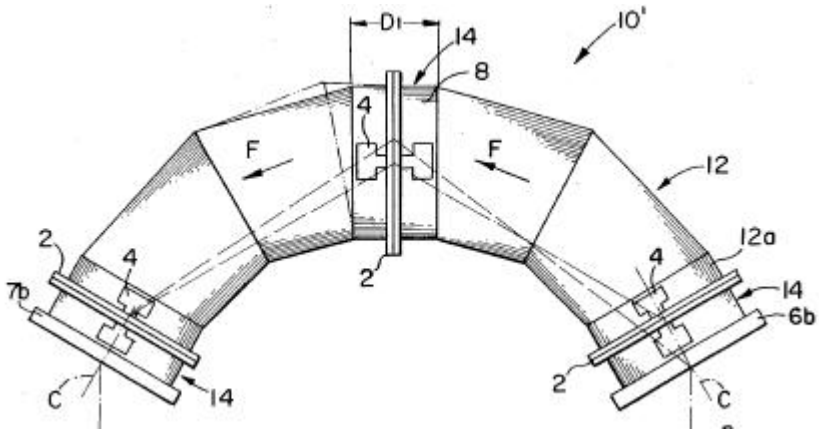

taken from US4986732

F01D 15/00

Adaptations of machines or engines for special use; Combinations of engines with devices driven thereby (regulating or controlling see the relevant groups; aspects predominantly concerning driven devices, see the relevant classes for the devices)

Definition statement

This place covers:

Adaptation off machines or engines for special use, combinations of engines with devices driven thereby: gas turbines in combination with pumps, electrical generators, turbines specifically adapted for driving vehicles, air turbines used in compressed air driven power tools or dentistry applications

References

Informative references

Attention is drawn to the following places, which may be of interest for search:

Dental machines	A61C 1/00
Portable grinding machines	B24B 23/00

F01D 15/10

Adaptations for driving, or combinations with, electric generators

References

Informative references

Attention is drawn to the following places, which may be of interest for search:

Features relating to the electrical generator	H02K

F01D 17/00

Regulating or controlling by varying flow (for reversing F01D 1/30; by varying rotor-blade position F01D 7/00; specially for starting F01D 19/00; shutting-down F01D 21/00; regulating or controlling in general G05 {specially adapted for hand-held tools or the like F01D 15/06})

References

Informative references

Attention is drawn to the following places, which may be of interest for search:

Regulating or controlling by varying flow for reversing	F01D 1/30
Specially for starting	F01D 19/00
Shutting-down	F01D 21/00
Regulating or controlling in general	G05

F01D 17/06

responsive to speed

References

Informative references

Attention is drawn to the following places, which may be of interest for search:

Measurement of rotational speed	G01P

F01D 17/08

responsive to condition of working-fluid, e.g. pressure

References

Informative references

Attention is drawn to the following places, which may be of interest for search:

Pressure sensors	G01L

F01D 17/165

{for radial flow, i.e. the vanes turning around axes which are essentially parallel to the rotor centre line (F01D 17/167 takes precedence)}

Definition statement

This place covers:

Vanes assemblies usually activated by a unison ring or the like in which the vanes are turning uniformly around an axis that is parallel to the rotor main axis, e.g. like in a conventional automotive turbocharger assembly

Special rules of classification

If specific for turbochargers classify also in F05D 2220/40 as additional information or F02C 6/12 as invention information

Illustrative example of subject matter classified in F01D 17/165

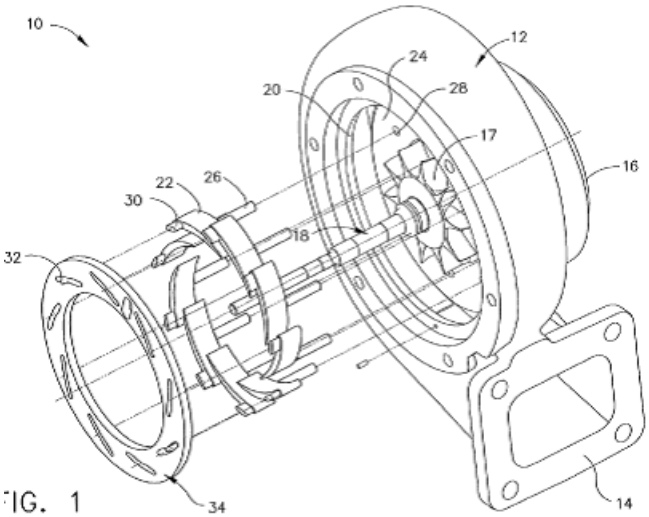

FIG. 1

taken from US2003014972

F01D 17/167

{of vanes moving in translation}

Special rules of classification

If specific for turbochargers classify also in F05D 2220/40 as additional information or F02C 6/12 as invention information

F01D 19/00

Starting of machines or engines; Regulating, controlling, or safety means in connection therewith (warming-up before starting F01D 25/10; turning or inching gear F01D 25/34)

References

Informative references

Attention is drawn to the following places, which may be of interest for search:

Warming-up before starting	F01D 25/10
Turning or inching gear	F01D 25/34
Control of a generator (circuit) during starting/stopping of driving means	H02P 9/08

F01D 21/00

Shutting-down of machines or engines, e.g. in emergency; Regulating, controlling, or safety means not otherwise provided for

Definition statement

This place covers:

Shutting-down of machines or engines, e.g. in emergency; regulating, controlling, or safety means not otherwise provided for, e.g. shutting down operations or methods should be classified in here if none of the sub groups apply

F01D 21/003

{Arrangements for testing or measuring (for measuring vibrations G01H)}

Relationships with other classification places

Measurements by optical means	G01B
Measuring vibrations	G01H
Measuring linear or angular speed	G01P

F01D 21/16

Trip gear

Definition statement

This place covers:

Trip mechanisms for trip valves

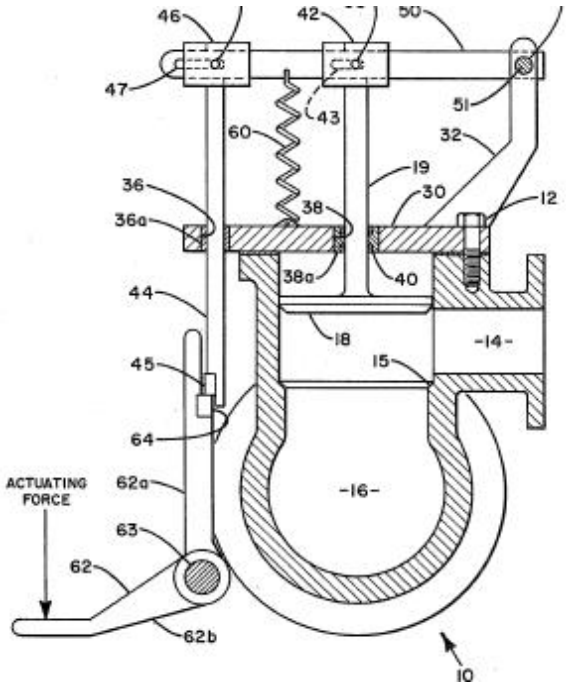

taken from US4379544

F01D 23/00

Non-positive-displacement machines or engines with movement other than pure rotation, e.g. of endless-chain type

Definition statement

This place covers:

Illustrative example of subject matter classified in this group:

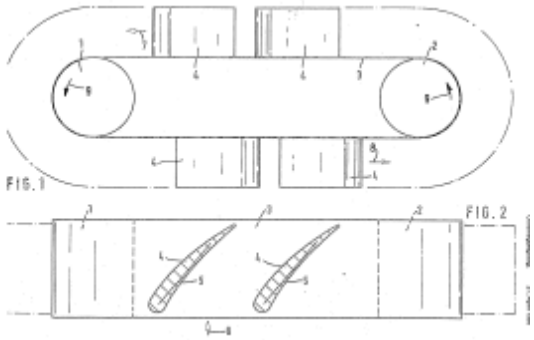

taken from DE3139802

F01D 25/002

{Cleaning of turbomachines}

References

Informative references

Attention is drawn to the following places, which may be of interest for search:

Cleaning in general	B08B
Administration of workflow	G06Q 10/00

F01D 25/16

Arrangement of bearings; Supporting or mounting bearings in casings (bearings per se F16C)

References

Informative references

Attention is drawn to the following places, which may be of interest for search:

Bearings in general	F16C

Special rules of classification

Illustrative example of subject matter classified in F01D 25/16

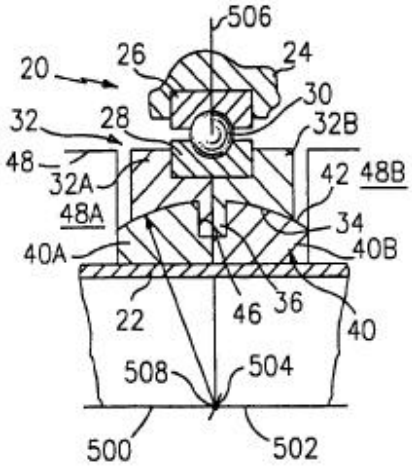

representative image taken from EP1013896

This subgroup also contains features relating to turbochargers.

If information is presented about the overall bearing configuration see also F02C 7/06.

If specific for turbochargers classify also in F05D 2220/40

F01D 25/162

{Bearing supports}

Special rules of classification

Illustrative example of subject matter classified in F01D 25/162

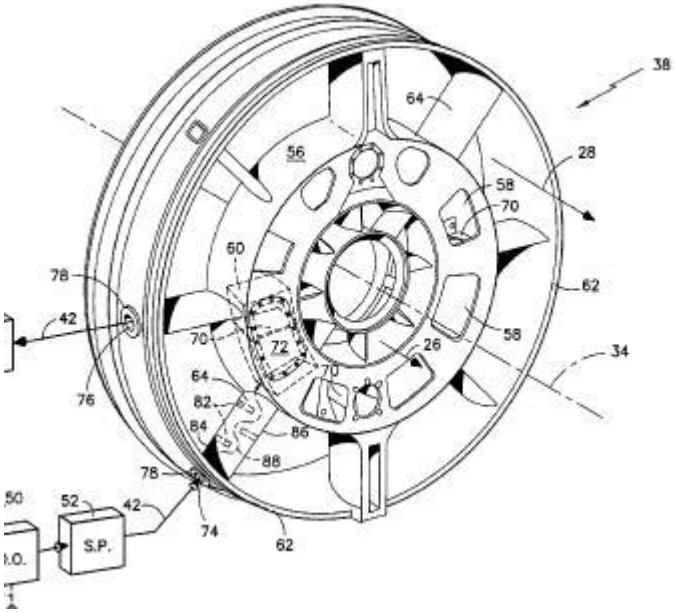

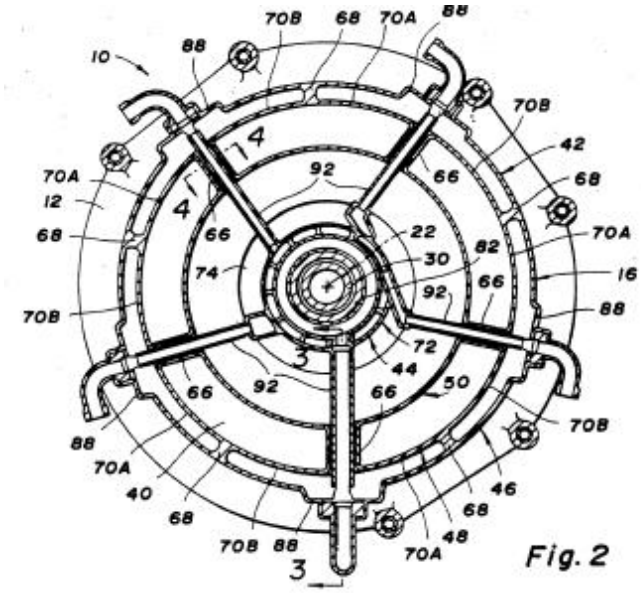

taken from EP1630358 and US5080555

F01D 25/164

{Flexible supports; Vibration damping means associated with the bearing}

Special rules of classification

Illustrative example of subject matter classified in F01D 25/164

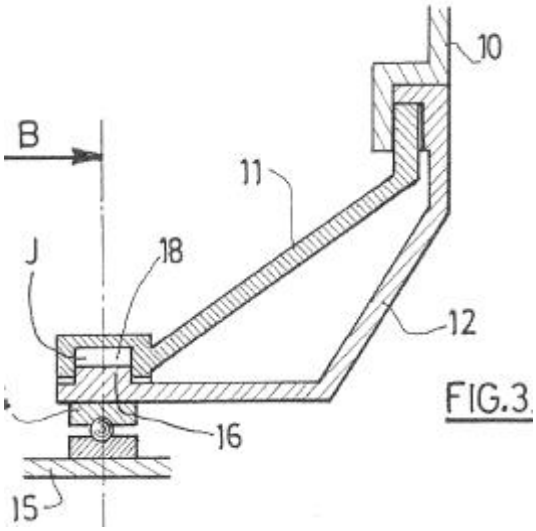

taken from EP1553324

F01D 25/166

{Sliding contact bearing (gas bearings F01D 25/22)}

References

Informative references

Attention is drawn to the following places, which may be of interest for search:

Gas bearings in turbomachines	F01D 25/22

Special rules of classification

Illustrative example of subject matter classified in F01D 25/166

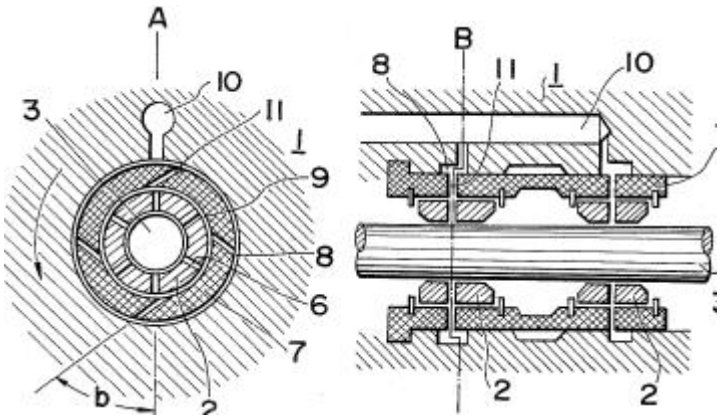

taken from US4371219

F01D 25/168

{for axial load mainly}

Special rules of classification

Illustrative example of subject matter classified in F01D 25/168

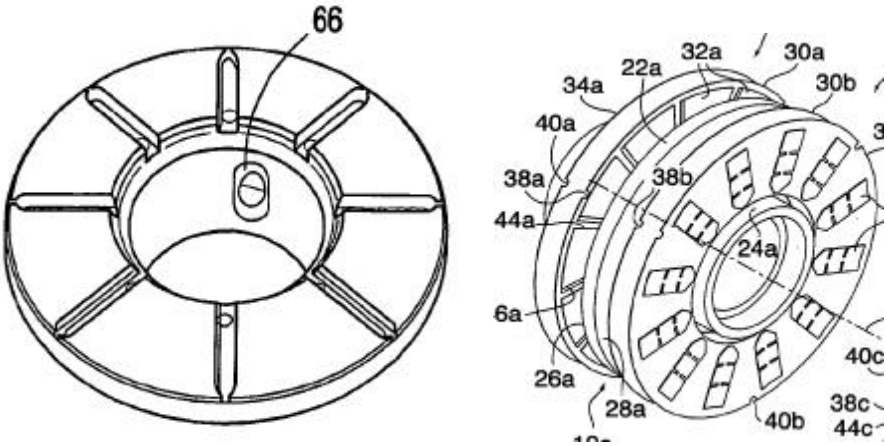

taken from US2005047690 and US2005147335

F01D 25/18

Lubricating arrangements (of machines or engines in general F01M)

Definition statement

This place covers:

Aspects related to lubrication of the engine such as lubrication circuits, lubricant supply, scavenging and the like, covers also features relating to turbochargers and lubrication thereof

References

Informative references

Attention is drawn to the following places, which may be of interest for search:

Lubricating arrangements of machines or engines in general	F01M

Special rules of classification

If specific for turbochargers classify also in F05D 2220/40

F01D 25/24

Casings (modified for heating or cooling F01D 25/14); Casing parts, e.g. diaphragms, casing fastenings (casings for rotary machines or engines in general F16M {special arrangements in stators dealing with breaking-off of part of rotor F01D 21/045})

Definition statement

This place covers:

Casings for turbomachinery and also features relating to turbocharger casings.

References

Informative references

Attention is drawn to the following places, which may be of interest for search:

Special arrangements in stators dealing with breaking-off of part of rotor	F01D 21/045
Casings modified for heating or cooling	F01D 25/14
Casings for rotary machines or engines in general	F16M

Special rules of classification

If specific for turbochargers classify also in F05D 2220/40

F01D 25/285

{Temporary support structures, e.g. for testing, assembling, installing, repairing; Assembly methods using such structures}

References

Informative references

Attention is drawn to the following places, which may be of interest for search:

Devices holding or positioning work or tools	B23Q
Tools for holding and clamping	B25B

Special rules of classification

Illustrative example of subject matter classified in F01D 25/285

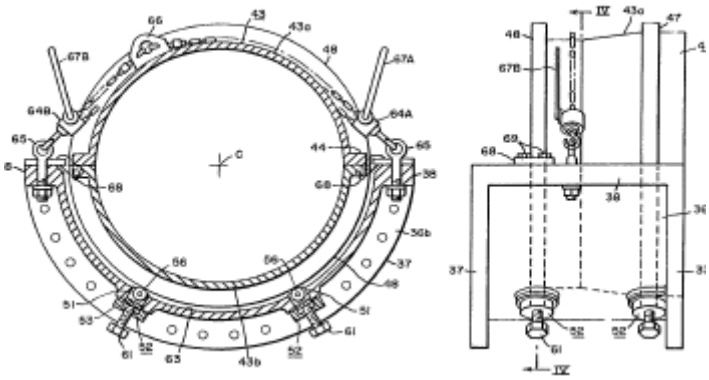

taken from GB1211313

F01D 25/30

Exhaust heads, chambers, or the like

References

Informative references

Attention is drawn to the following places, which may be of interest for search:

Silencing or noise abatement in jet pipes or walls	F02K 1/827
Noise attenuators in general	G10K 11/00

Special rules of classification

Illustrative example of subject matter classified in F01D 25/30

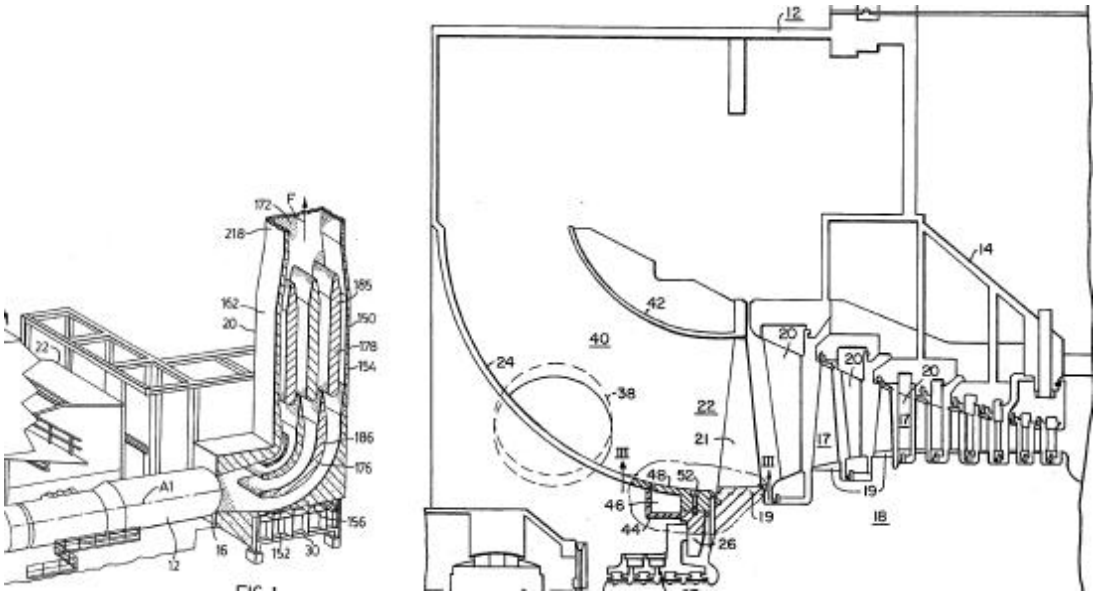

taken from EP1262666 and US3945760

- Classify in F05D 2260/96 in case of noise suppression.

F01D 25/305

{with fluid, e.g. liquid injection}

Definition statement

This place covers:

Exhaust heads or chambers or diffusers comprising an additional injection of fluid such as air or liquids for any desired purpose such as cooling, cleaning of exhaust, deswirling etc.

Special rules of classification

Illustrative example of subject matter classified in F01D 25/305

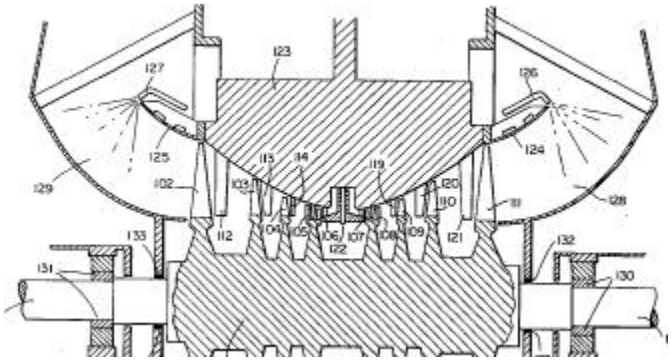

taken from US3885822

F01D 25/34

Turning or inching gear

Definition statement

This place covers:

Auxiliary equipment for rotating the rotor of a gas or steam turbine at low rpm, e.g. for inspection purposes or prevention of sagging and the like

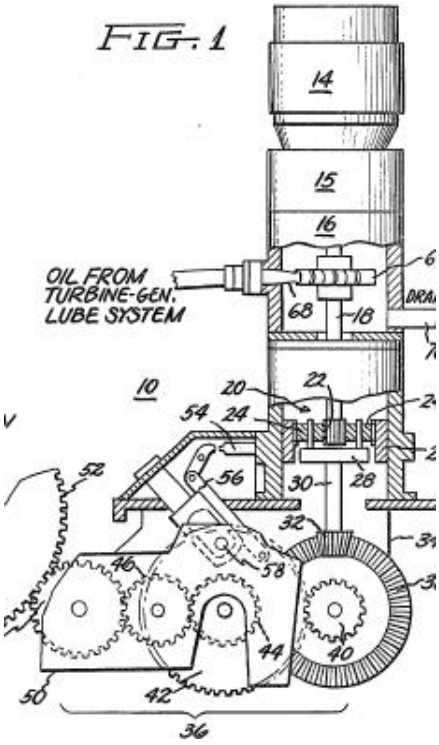

taken from US4430575