E05B

LOCKS; ACCESSORIES THEREFOR; HANDCUFFS

Definition statement

This place covers:

Locks for swingable, slidable, or otherwise movable wings, e.g. doors or windows, for restricting access, which are usually, but not necessarily always, unlocked by means of a key or equivalent means, e.g. combination means, electrical means, etc. It also covers handles or knobs for wings, including handles for wings which do not operate the locking mechanism. It additionally covers latching or locking means for other movable structures such as drawers, lids of chests, vehicle doors, vehicle lids for luggage or engine compartments, to which the locking means covered by this subclass may be applied. It further covers devices for locking clothing, locks specially adapted for bicycles, locks for locking portable objects against unauthorised removal and handcuffs.

Relationships with other classification places

- Bolts or fastening devices for wings, specially for doors or windows: E05C;
- Hinges or other suspension devices for door, windows or wings: E05D;
- Devices for moving wings into open or closed positions: E05F;
- Safes or strong-rooms: E05G;
- Door, windows, shutters, roller blinds, gate: E06B
- Individual entry or exist registers: G07C 9/00

References

Limiting references

This place does not cover:

Buckles; Similar fasteners for interconnecting straps or the like	A44B 11/00
Devices for fastening or securing constructional elements or machine parts together	F16B
Electronic locks	G07C 9/00

Application-oriented references

Examples of places where the subject matter of this place is covered when specially adapted, used for a particular purpose, or incorporated in a larger system:

Door latches for dish washers	A47L 15/4259
Locking devices for vehicle seats, e.g. for back rests or for locking a seat relative to the floor	B60N 2/00
Locking devices for container closures	B65D 55/02
Locking or fastening means for lids or covers of refuse receptacles	B65F 1/1615
Locks for washing machines	D06F 39/14
Locking of doors, covers, guards acting in conjunction with the control or operation of a machine	F16P 3/08
Latches for doors specially adapted for stoves	F24C 15/022

Glossary of terms

In this place, the following terms or expressions are used with the meaning indicated:

Bolt	means a sliding, pivoted, or otherwise movable member such as is normally carried by a door to hold it shut by engagement with a keeper on the frame. It may be operated by hand directly or through mechanism or by a key; it may be a latch (see below);
Frame	means any member to which a wing may be held by a fastening device. It does not include a framework forming part of the wing, but it may be another wing.
Hasp	means a member hinged to the frame or wing so that it can be moved towards the face of the wing or frame and secured thereto, e.g. by a turn-button, by a padlock and staple.
Latch	means a bolt arranged to be moved to the releasing position against the force of a spring, or some other returning force, when a wing meets the frame on closing, so that it does not have to be operated by hand to secure the wing, but only to open it.
Lock	means primarily a device for releasing or securing any member, which requires a key or a permutation mechanism for release. In groups E05B 1/00- E05B 9/00, E05B 13/00- E05B 17/00, E05B 39/00- E05B 47/00, E05B 51/00, E05B 53/00, E05B 63/00 and E05B 65/00 however, the term "lock" may include other fastening devices.
Wing	is a general term for swingable, slidable, or otherwise movable doors or windows. This term also includes other movable structures such as drawers, lids of chests, car boots, or car bonnets, to which the operating, mounting, latching, or locking means covered by this class may be applied.

E05B 1/00

Knobs or handles for wings ({specially adapted for vehicle doors E05B 85/10}; for furniture A47B 95/02); Knobs, handles or press buttons for locks or latches on wings (E05B 5/00, E05B 7/00 take precedence)

Definition statement

This place covers:

Knobs, handles or push-buttons for wings. The handles can be movable or non-movable

References

Limiting references

This place does not cover:

Handles completely let into the surface of the wing	E05B 5/00
Handles pivoted about an axis parallel to the wing	E05B 7/00
Handles for vehicles	E05B 85/10 - E05B 85/18
Handles for suitcases or travelling bags	A45C 13/26
Handles for carrying purposes	A45F 5/10
Handles for hand implements, e.g. for tools	B21G 1/00

Handgrips or straps for passengers in vehicles	B60N 3/02
Handles for containers	B65D 25/28
Handles for sacks or bags	B65D 33/06
Straps provided with handles for bundling articles	B65D 63/18
Controlling members for hand actuation, e.g. handles	G05G 1/00

Application-oriented references

Examples of places where the subject matter of this place is covered when specially adapted, used for a particular purpose, or incorporated in a larger system:

Handles for furniture	A47B 95/02

Informative references

Attention is drawn to the following places, which may be of interest for search:

Methods or apparatus for disinfecting materials	A61L 2/00
Details of refrigerator doors	F25D 23/028

E05B 3/00

Fastening {knobs or} handles to lock or latch parts {(E05B 79/06 takes precedence)}

Definition statement

This place covers:

Fastening the knob or handle to lock or latch parts, in particular to the lock spindle, as well as fastening the spindle to the lock follower.

References

Limiting references

This place does not cover:

Mounting handles to a vehicle wing	E05B 79/06

Informative references

Attention is drawn to the following places, which may be of interest for search:

Mounting of handles which do not operate the bolt	E05B 1/0015
Fastening locks or fasteners or parts thereof to the wing	E05B 9/08

E05B 5/00

Handles completely let into the surface of the wing {(E05B 85/10 takes precedence)}

Definition statement

This place covers:

Handles which are flush when mounted to a wing and pop-out handles.

References

Limiting references

This place does not cover:

Handles for vehicles	E05B 85/10 - E05B 85/18

Informative references

Attention is drawn to the following places, which may be of interest for search:

Handles combined with bolt movement	E05C 1/00, E05C 3/00

E05B 7/00

Handles pivoted about an axis parallel to the wing (E05B 5/00, {E05B 85/14} take precedence; {combined with bolt movement E05C 1/00, E05C 3/00})

Definition statement

This place covers:

Handles pivoted about an axis parallel to the wing

References

Limiting references

This place does not cover:

Handles for vehicles	E05B 85/10 - E05B 85/18

Informative references

Attention is drawn to the following places, which may be of interest for search:

Handles combined with bolt movement	E05C 1/00, E05C 3/00

E05B 9/00

Lock casings or latch-mechanism casings; {Fastening locks or fasteners or parts thereof to the wing} (padlock casings E05B 67/02; for vehicles E05B 79/04, E05B 85/02)

Definition statement

This place covers:

Lock or latch mechanism casings of latch bolt locks, of dead bolt locks and of cylinder locks;

Face plates;

Fastening of locks or parts thereof to the wing;

Coupling devices for the two halves of a double cylinder lock.

This group has the following structure:

Faceplates or front plates	E05B 9/002
Casing of latch bolt or dead bolt locks	E05B 9/02
Casing of cylinder locks	E05B 9/04
Fastening locks or fasteners or parts thereof, e.g. the casings of latch bolt or dead bolt locks to the wing	E05B 9/08
Fastening of lock cylinders to the wing	E05B 9/084
Fastening plugs or cores to an outer stator	E05B 9/086
Coupling devices for the two halves of double cylinder locks	E05B 9/10

References

Limiting references

This place does not cover:

Padlock casings	E05B 67/02
Mounting of lock casings to the vehicles	E05B 79/04
Lock cylinder arrangements vehicles	E05B 85/06

Informative references

Attention is drawn to the following places, which may be of interest for search:

Handles which do not operate the bolt	E05B 1/0015
Fastening locks for glass wings	E05B 65/0025

E05B 11/00

Devices preventing keys from being removed from the lock; {Devices preventing falling or pushing out of keys (preventing turning of the key E05B 13/00; keyhole guards E05B 17/14; E05B 35/086 takes precedence)}

References

Limiting references

This place does not cover:

Using a pair of interlocked keys	E05B 35/086

Informative references

Attention is drawn to the following places, which may be of interest for search:

Preventing turning of the key	E05B 13/00
Keyholes guards	E05B 17/14

E05B 13/00

Devices preventing the key or the handle or both from being used {(covers or guards for keyholes E05B 17/14)}

Definition statement

This place covers:

Covers preventing access to the handle or key;

Devices for locking the handle;

Devices for disconnecting the handle;

References

Limiting references

This place does not cover:

Electrically locking the handle	E05B 47/0657
Electrically disconnecting the handle	E05B 47/0676
Disconnecting the handle in a lock in which a sliding latch is used as a locking bolt	E05B 55/06

Informative references

Attention is drawn to the following places, which may be of interest for search:

Closures or guards for keyholes	E05B 17/14

E05B 15/00

Other details of locks; Parts for engagement by bolts of fastening devices (fastening devices for wings other than locks or associated with locks E05C)

Definition statement

This place covers:

Other details and parts of locks according to the following structure:

Devices for aligning wing and frame; Anti-rattling devices	E05B 15/0006
Followers; bearings therefor	E05B 15/0013
Energy storage by movement of the wing	E05B 15/002
Adaptors cooperating with and acting on keys inserted in an existing lock	E05B 15/0026
Spindles for handles, i.e. square spindles	E05B 15/0033
Lost motion connections	E05B 15/004
Ratchet mechanisms	E05B 15/0046
Means providing a stable position for lock parts	E05B 15/0053
Toggle levers	E05B 15/0086
Gravity actuated lock parts	E05B 15/0093
Escutcheon plates	E05B 15/02
Striking plates, keepers	E05B 15/0205
Spring arrangement in locks	E05B 15/04
Lock wards	E05B 15/06
Key guides	E05B 15/08
Bolts of locks	E05B 15/10
Tumblers	E05B 15/14
Use of special materials for parts of the locks	E05B 15/16

Relationships with other classification places

- Bolts or fastening devices for wings, specially for doors or windows: E05C.

References

Limiting references

This place does not cover:

Spring biasing means for moving the handle	E05B 3/065
Using special materials for keys	E05B 19/26
Electric strikers	E05B 47/0046
Gravity mechanisms for brief- or suitcases	E05B 65/5292
Staples for padlocks	E05B 67/383
Gravity arrangements related to vehicle accidents	E05B 77/06, E05B 77/12
Anti-rattling means in vehicles	E05B 77/36

Strikers for vehicles	E05B 85/04
Bolts or detents for vehicle locks	E05B 85/20
Strikers for espagnolette locks	E05C 9/1808
Securing part is formed by a spring, e.g. snaps	E05C 19/06
Finger plates	E06B 7/285

Informative references

Attention is drawn to the following places, which may be of interest for search:

Wound springs	E05B 2015/0403
Modifying spring characteristic or tension	E05B 2015/0431
Attachments or mountings; Mounting of springs	E05B 2015/0437
Units of springs; Two or more springs working together	E05B 2015/0448
Folded springs	E05B 2015/0451
Torsion springs of bar type	E05B 2015/0455
Leaf springs; Non-wound wire springs	E05B 2015/0458
Ring springs	E05B 2015/0462
Cup- or dished-disc springs	E05B 2015/0465
Made of one piece with a lock part	E05B 2015/0468
Made of rubber, plastics or the like	E05B 2015/0472
Heavy springs which cannot be operated by hand	E05B 2015/0482
A single spring working on more than one part	E05B 2015/0486
Overcenter springs	E05B 2015/0493
Springs actuated by cams or the like	E05B 2015/0496
For the whole lock	E05B 2015/1642
For bolts	E05B 2015/165
For escutcheons	E05B 2015/1657
For lock housing	E05B 2015/1664
For strikers	E05B 2015/1671
For handle bearings	E05B 2015/1678
Toggle fasteners	E05C 19/14

E05B 17/00

Accessories in connection with locks (buffers E05F 5/00; means for preventing rattling of wings E05F 7/04; means for taking the weight of the wing E05F 7/06)

Definition statement

This place covers:

Accessories in connection with locks according to the following structure:

Lock assembling or manufacturing	E05B 17/0004

Defrosting, heating devices	E05B 17/0016
Weather or dirt protection	E05B 17/002
Devices for forcing the wing against its seat or to initiate opening of the wing	E05B 17/0025
Damping means	E05B 17/0041
Silencing devices, noise reduction	E05B 17/0045
Preventing accidental lock-out	E05B 17/005
Fraction or shear lines	E05B 17/0054
Insulating, e.g. for limiting heat transfer	E05B 17/0075
Devices for coupling the turning cylinder with the bolt operating member	E05B 17/04
Templates or apparatus for installing locks	E05B 17/06
Lubricating devices	E05B 17/08
Illuminating devices	E05B 17/10
Devices for removing key stuck in the lock	E05B 17/12
Closures or guards for keyholes	E05B 17/14 - E05B 17/188
Means independent of the locking mechanism for preventing unauthorised opening, e.g. by attack	E05B 17/20
Means for operating or controlling locking mechanisms, e.g. switches, indicators	E05B 17/22

Relationships with other classification places

- Bolts or fastening devices for wings, specially for doors or windows: E05C.

References

Limiting references

This place does not cover:

Preventing dirt into the striker	E05B 15/029
Illuminating devices attached to key rings	E05B 17/103
With means carried by the lock for interlocking with the keeper	E05B 63/12
Additional locking for safes responsive to attack	E05B 65/0082
Weather protection for vehicles	E05B 77/34
Noise prevention, anti-rattling means in vehicles	E05B 77/36
Cushion elements in vehicles	E05B 77/38
Vehicle locks elements covered by a silencing coating	E05B 77/40
Means for damping the movement of vehicle lock parts	E05B 77/42
Burglar prevention in vehicles, e.g. by opening by unauthorised tool	E05B 77/44
For assisting closing vehicle doors	E05B 81/20
Making locksmith's goods of sheet metal, e.g. handles	B21D 53/38
Drill jibs for work pieces	B23B 47/28
Assembling in general	B23P 21/00

Slotted or mortise work	B27F 5/12
Using toothed wheels between lock cylinder and operating bars in espagnolette locks	E05C 9/023
Templates for hinges	E05D 11/0009
Anti-tampering devices for hinges	E05D 11/0018
Stops or buffers preventing slamming of the wings	E05F 5/02
Means for taking the weight of the wing	E05F 7/06

Informative references

Attention is drawn to the following places, which may be of interest for search:

Devices for holding pieces while being painted	B05B 13/0292
Means for preventing rattling of the wing	E05F 7/04
Switches associated with locking means of the closing member	H01H 3/163

E05B 19/00

Keys; Accessories therefor (making keys, see the relevant places, e.g. B21D 53/42 {or B23P 15/005}; milling grooves in keys B23C 3/35); {(E05B 11/005 takes precedence; illuminating devices E05B 17/103; key rings A44B 15/00; key cases A45C 11/32; key holders A47G 29/10)}

Definition statement

This place covers:

Keys for locks and accessories therefor and it has the following structure:

Key safes, i.e. lockable container for safe storage of one or a few keys	E05B 19/0005
Key decoders	E05B 19/0011
Key profiles	E05B 19/0017
Construction of the key head, attaching the head to the shank	E05B 19/04
Double or multiple keys	E05B 19/14
Keys adjustable before use	E05B 19/18
Skeleton keys; devices for picking up locks	E05B 19/20
Keys indicating whether the last operation was locking or unlocking	**E05B18/22**
Key distinguishing marks	E05B 19/24
Use of special materials for keys	E05B 19/26

Relationships with other classification places

- Individual entry or exist registers G07C 9/00.

References

Limiting references

This place does not cover:

Keys with magnets	E05B 47/0045
Mechanical keys for electric permutation locks	E05B 49/00
Key rings	A44B 15/00
Key cases; e.g. purses for keys or small cases for extendable/retractable storage of several keys or shanks (however for single keys/shanks E05B 19/0082, E05B 19/043, E05B 19/046)	A45C 11/32
Key holders; boards or cabinets for key storage	A47G 29/10
Rescue tools with forcing action	A62B 3/005
Making keys	B21D 53/42
Milling grooves in keys	B23C 3/35
Key manufacturing	B23P 15/005
Non-mechanical keys for electronic locks	G07C 9/00944

Informative references

Attention is drawn to the following places, which may be of interest for search:

Illuminating devices on keys	E05B 17/103
Locks for use with special keys	E05B 35/00

E05B 21/00

Locks with {lamelliform} tumblers {which are not set by the insertion of the key and which are} not following the movement of the bolt {, e.g. Chubb-locks}

Definition statement

This place covers:

Locks with plate tumblers wherein, when the correct key is inserted into the lock, the tumblers are not immediately moved to their unlocked positions. Only when the key is thereafter turned, the tumblers are moved to their unlocked positions. The movement of the tumblers does not follow the movement of the bolt, which means that the tumblers usually are mounted to the lock housing. This group has the following structure:

Chubb locks	E05B 21/00
Cylinder locks, e.g. Protector locks	E05B 21/06
Cylinder locks of the sliding-plate tumble type	E05B 21/063
Cylinder locks of the rotary-disc tumbler type	E05B 21/066

EP 0 903 455 A2

FIG.1

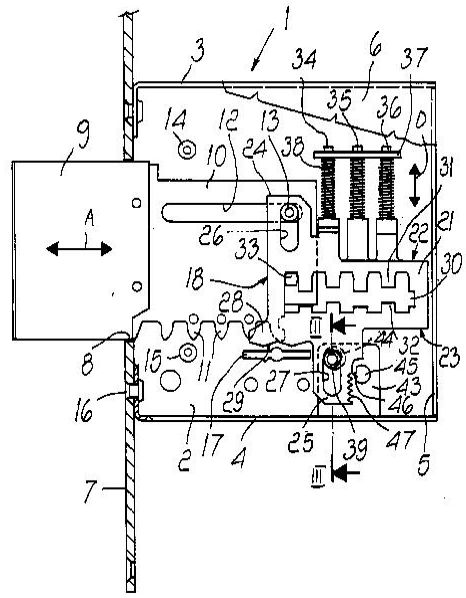

EP0903455

Special rules of classification

E05B 21/00 should contain locks with tumblers moved by rotation of the key in which, when the key is turned, the movement of the tumblers is independent of the movement of the bolt, e.g. the tumblers are guided in the lock casing for movement in a direction perpendicularly to the movement direction of the bolt.

E05B 21/06

Cylinder locks, e.g. Protector locks

Definition statement

This place covers:

Cylinder locks wherein the tumblers are not set by pushing the key in.

Fig. I

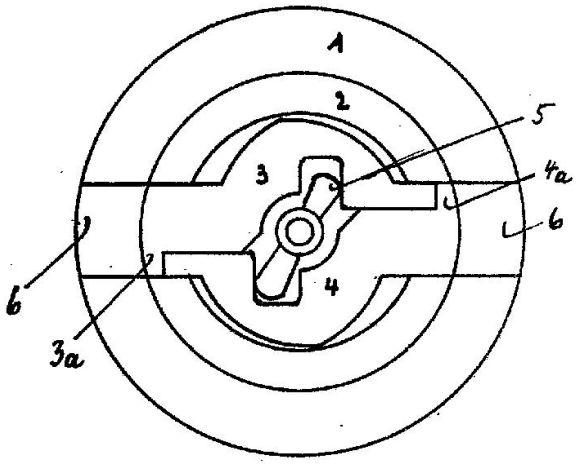

DE560425

E05B 21/066

{of the rotary-disc tumbler type (tumblers which are set by inserting the key E05B 29/0013)}

Definition statement

This place covers:

Cylinder locks with rotary-disc tumblers wherein the tumblers are not set by pushing the key in.

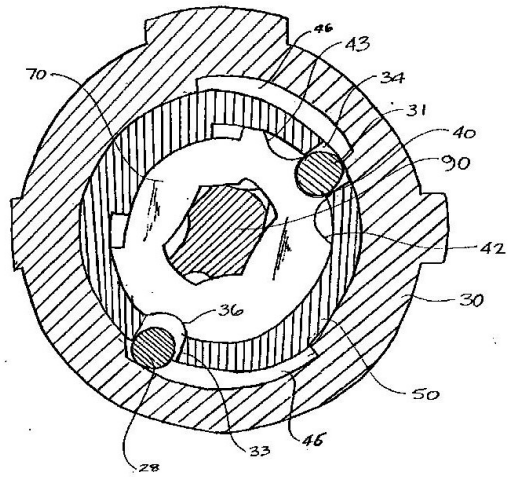

Fig. 3

EP0978608

Special rules of classification

Cylinder locks with rotary tumblers, such that when the key is inserted into the lock the tumblers are set should be classified in E05B 29/0013.

E05B 23/00

Locks with {lamelliform} tumblers {which are not set by the insertion of the key and which are} following the movement of the bolt

Definition statement

This place covers:

Locks, other than cylinder locks, wherein when the key is turned to move the bolt the tumblers follow the movement of the bolt, e.g. the tumblers are pivotally mounted on the bolt.

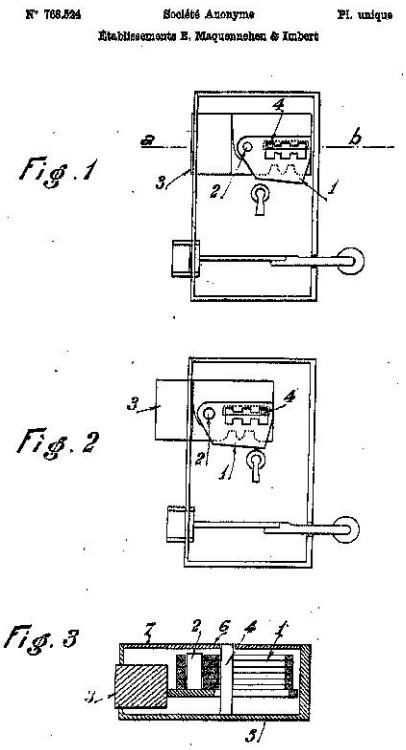

FR768524

E05B 27/00

Cylinder locks {and other locks} with tumbler pins which are set by pushing the key in {(fastening of cylinders, rotors, plugs or cores E05B 9/084; with magnetic tumblers E05B 47/0044; with electromagnetic control E05B 47/0611)}

Definition statement

This place covers:

Cylinder locks with tumbler pins or balls which are set by pushing the key in and parts thereof, i.e. rotors, stators and tumblers.

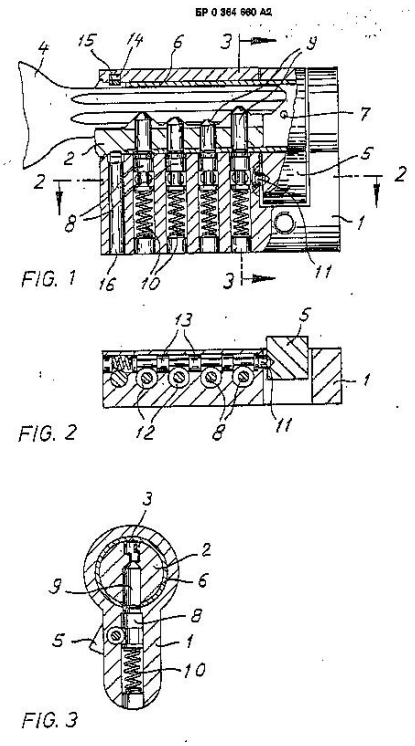

EP0364660

References

Limiting references

This place does not cover:

Lock cylinder arrangements vehicles	E05B 85/06

Informative references

Attention is drawn to the following places, which may be of interest for search:

Casing of cylinder locks	E05B 9/04
Fastening of lock cylinders to the wing	E05B 9/084
Fastening plugs or cores to an outer stator	E05B 9/086
Coupling devices for the two halves of double cylinder locks	E05B 9/10
Cylinder locks with magnetic tumblers	E05B 47/0044
Cylinder locks with electromagnetic control	E05B 47/0611

E05B 29/00

Cylinder locks {and other locks} with plate tumblers which are set by pushing the key in {(fastening of cylinders, rotors, plugs or cores E05B 9/084; with magnetic tumblers E05B 47/0044; with electromagnetic control E05B 47/0611)}

Definition statement

This place covers:

Cylinder locks with plate tumblers which are set by pushing the key in. The plate tumblers can slide, rotate or float, e.g. slide and rotate.

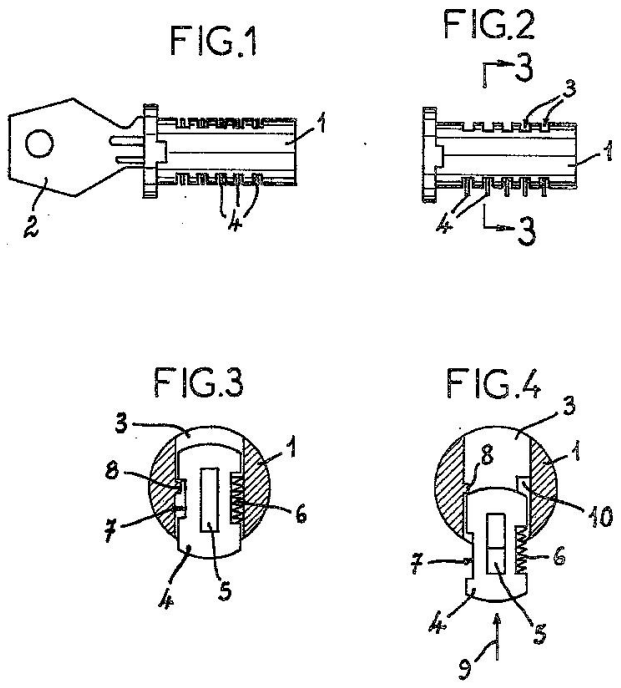

FR768524

References

Limiting references

This place does not cover:

Lock cylinder arrangements vehicles	E05B 85/06

Informative references

Attention is drawn to the following places, which may be of interest for search:

Casing of cylinder locks	E05B 9/04
Fastening of lock cylinders to the wing	E05B 9/084
Fastening plugs or cores to an outer stator	E05B 9/086
Coupling devices for the two halves of double cylinder locks	E05B 9/10
Cylinder locks with magnetic tumblers	E05B 47/0044
Cylinder locks with electromagnetic control	E05B 47/0611

E05B 29/0013

{with rotating plate tumblers (E05B 29/0033 takes precedence; plate tumblers which are not set by inserting the key E05B 21/06)}

Definition statement

This place covers:

Cylinder locks with rotary tumblers, wherein, when the key is inserted into the lock the tumblers are set to the right combination.

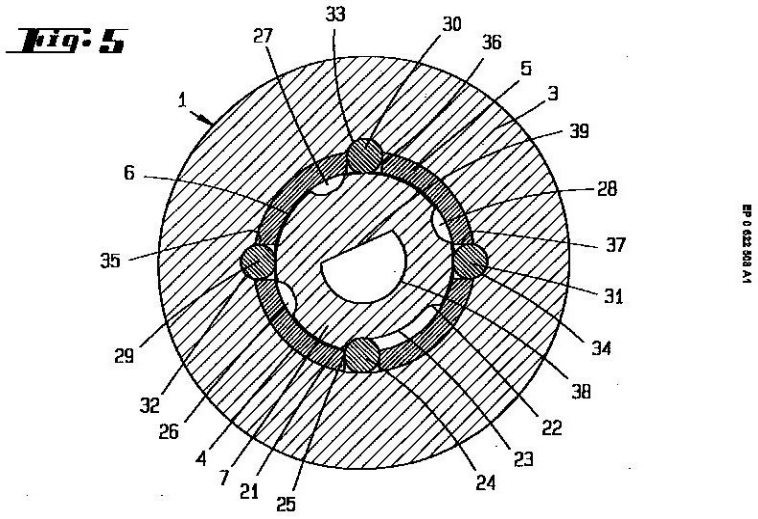

EP0622508

Special rules of classification

Cylinder locks with rotary tumblers, wherein, when the key is inserted into the lock the tumblers are not set, e.g. do not move, and when during rotation of the key the tumblers are set to the right combination should be classified in E05B 21/066.

E05B 31/00

Cylinder locks with both tumbler pins or balls and plate tumblers

Definition statement

This place covers:

Cylinder locks with both tumbler pins or balls and plate tumblers which are set by pushing the key in.

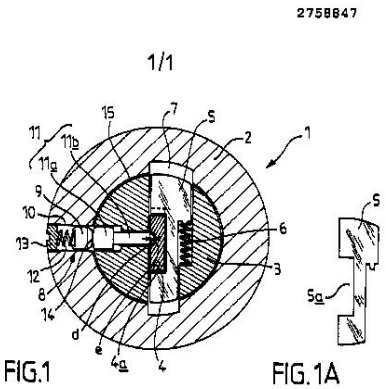

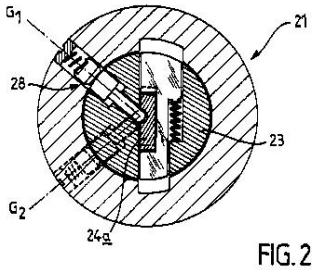

FR2758847

E05B 33/00

Cylinder locks in which the bolt is moved by means other than the key

Definition statement

This place covers:

Cylinder locks with tumblers which are set by pushing the key in and wherein the rotor is moved by means other than the key.

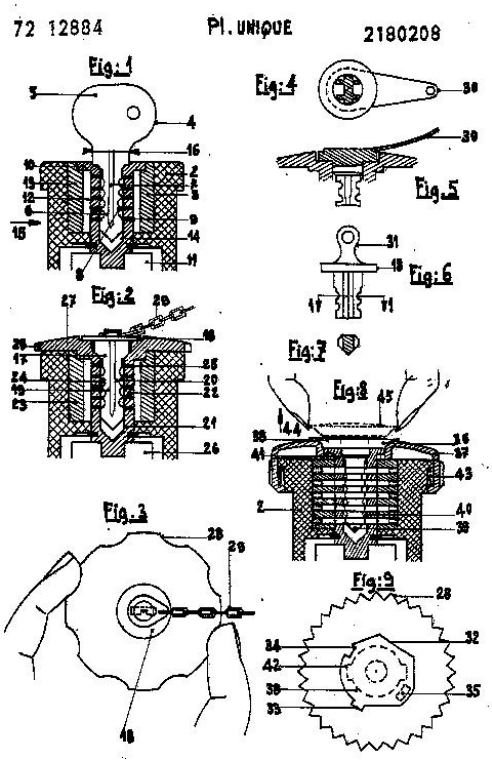

FR2180208

References

Informative references

Attention is drawn to the following places, which may be of interest for search:

Cylinder locks operated by handles, e.g. by knobs	E05B 2009/046
Cylinder locks with electromagnetic control operated by handles, e.g. knobs	E05B 47/0615

E05B 35/00

Locks for use with special keys or a plurality of keys; {keys therefor}

Definition statement

This place covers:

This group has the following structure:

With key identifying function	E05B 35/001
For flexible keys	E05B 35/002

For keys with movable bits	E05B 35/003
For rack- or pinion-like keys	E05B 35/006
The key being a perforated card or the like	E05B 35/007
For simple tool-like keys	E05B 35/008
Which can be shifted laterally or rotated about an axis perpendicular to the key axis	E05B 35/02
For screw keys	E05B 35/06
Operable by a plurality of key	E05B 35/08
With master and pass keys	E05B 35/10
Requiring the use of two keys	E05B 35/12
With keys that different parts operate separate mechanisms	E05B 35/14

References

Limiting references

This place does not cover:

Keys adjustable before use	E05B 19/18
Mechanical locks operated by cards having magnets	E05B 47/0043
Keys with magnets	E05B 47/0045
Mechanical keys for electric permutation locks	E05B 49/00
Non-mechanical keys for electronic locks	G07C 9/00944

Informative references

Attention is drawn to the following places, which may be of interest for search:

Key; accessories therefor	E05B 19/00
Cylinder locks with tumbler pins or balls	E05B 27/00
Cylinder locks with plate tumblers	E05B 29/00

E05B 37/00

Permutation {or combination} locks ({handles with combination locks E05B 13/103; keyhole guards with combination locks E05B 17/145; alarms therefor E05B 45/061}; electric permutation locks E05B 49/00; {for container closures B65D 55/145; combination switches H01H 27/10}); Puzzle locks

Definition statement

This place covers:

Mechanical combination locks, padlocks with combination locks and puzzle locks.

Relationships with other classification places

- Individual entry or exist registers G07C 9/00.

References

Limiting references

This place does not cover:

Electric permutation locks	E05B 49/00
Electronic permutation locks	G07C 9/00
Combination switches	H01H 27/10

Application-oriented references

Examples of places where the subject matter of this place is covered when specially adapted, used for a particular purpose, or incorporated in a larger system:

Permutation locks for container closures	B65D 55/145

Informative references

Attention is drawn to the following places, which may be of interest for search:

Handles with combination locks	E05B 13/103
Keyhole guards with combination locks	E05B 17/145
Alarms for combination locks	E05B 45/061

E05B 39/00

Locks giving indication of {authorised} or unauthorised unlocking {(with key identification means E05B 35/001; alarm locks E05B 45/00)}

Definition statement

This place covers:

Locks with means giving indication of authorised or unauthorised unlocking and also locks with non-electronic counting or registering devices.

Relationships with other classification places

- Means for indicating unauthorised opening of container closures B65D
- Registering indicating or recording the time G07C 1/00;
- Seals G09F 3/00;

References

Limiting references

This place does not cover:

Closures for postal containers with special means for indicating unauthorised opening	B65D 27/30
Locking devices for container closures with means for indicating unauthorised opening	B65D 55/02
Time recording locks (electronically)	G07C 1/32
Security seals	G09F 3/03

Informative references

Attention is drawn to the following places, which may be of interest for search:

Locks with key identification function	E05B 35/001
Alarm locks	E05B 45/00
Vehicle locks with means for sealing	E05B 83/14

Special rules of classification

As a general rule, if the means for giving indication for unauthorised opening has to be broken and cannot be reused without being replaced, it is not considered as a lock in the sense of E05B, but as a seal in the sense of G09F 3/00.

E05B 41/00

Locks with visible indication as to whether the lock is locked or unlocked {(indicator lights E05B 17/10)}

References

Informative references

Attention is drawn to the following places, which may be of interest for search:

Illuminating devices	E05B 17/10
Switches, indicators	E05B 17/22

E05B 43/00

Time locks, {e.g. locks with delaying means} (clocks or clock mechanisms with attached or built-in means operating any device at preselected times or after a predetermined time interval G04B 23/00 {time recording locks G07C 1/32})

Definition statement

This place covers:

Time locks, e.g. with delaying means and timers devices controlling electrically operated locks.

Relationships with other classification places

- Mechanically driven clocks or watches G04B 23/00
- Registering indicating or recording the time G07C 1/00;
- Time medicine dispensers A61G 7/00;

References

Limiting references

This place does not cover:

Medicine programmed dispensers	A61J 7/04
Time recording locks (electronically)	G07C 1/32

Informative references

Attention is drawn to the following places, which may be of interest for search:

Time locks	E05B 43/00
Electrically operated locks	E05B 47/00
Electric permutation locks	E05B 49/00

E05B 45/00

Alarms locks (alarm devices actuated by tampering with fastenings, in general G08B; {vehicle fittings actuating a signalling device B60R 25/10; bicycle appliances indicating unauthorised use B62H 5/20})

Definition statement

This place covers:

Locks provided with mechanical or electrically operated alarms, including chain, cables or padlock with alarms.

Relationships with other classification places

- Alarms systems G08B
- Vehicle fittings preventing or indicating unauthorised used or theft B60R 25/00;
- Appliances indicating unauthorised use or theft of cycles B62H 5/00;
- Safe or strong rooms E05G 1/00;

References

Limiting references

This place does not cover:

Vehicle theft alarms	B60R 25/10
Bicycle theft alarms	B62H 5/20
Safe or strong rooms with alarms	E05G 1/10
Alarm devices (other than the lock itself) actuated by tampering with fasteners	G08B 13/06

Informative references

Attention is drawn to the following places, which may be of interest for search:

Electric operated locks	E05B 47/00
Electric permutation locks	E05B 49/00
Detonating alarm devices in general	G08B 3/14

E05B 47/00

Operating or controlling locks or other fastening devices by electric or magnetic means (electric permutation locks E05B 49/00; holding in open position or limiting movement of wings by magnetic or electromagnetic attraction E05C 17/56; {E05B 17/0029, E05B 17/147, E05B 81/00, E05C 19/16 take precedence})

Definition statement

This place covers:

Locks or other fastening devices comprising electric or magnetic means for operation or control the lock functions. It has the following main structure:

E05B 49/00

Electric permutation locks; Circuits therefor; {Mechanical aspects of electronic locks; Mechanical keys therefor (arrangements for sensing or reading record carriers G06K 7/00, G06K 9/00; mechanisms including electronic locks actuated by nonmechanical keys such as passive and active electrical keys and other data carriers G07C 9/00, G07F 7/00; electronic switching H03K 17/00)}

Definition statement

This place covers:

Electric permutation locks and mechanical keys therefor. It has the following main structure:

Keys with mechanical characteristics	E05B 49/002
Keys actuating mechanical switches	E05B 49/004
Keys actuating opto-electronic devices	E05B 49/006

Relationships with other classification places

- Methods of sensing or reading record carriers G06K 7/00;
- Recognition of data, record carriers G07F 7/00;
- Mechanisms including electronic locks actuated by non mechanical keys such as passive and active electrical keys: G07C 9/00
- Mechanism actuated by coded cards: G07F 7/00
- Electronic switching or gating: H03K 17/00

References

Limiting references

This place does not cover:

Electric operated or controlled locks	E05B 47/00
Electronic locks actuated by non mechanical keys	G07C 9/00
Non-mechanical keys for electronic locks	G07C 9/00944

Application-oriented references

Examples of places where the subject matter of this place is covered when specially adapted, used for a particular purpose, or incorporated in a larger system:

Key operated switches	H01H 27/00

E05B 51/00

Operating or controlling locks or other fastening devices by other non-mechanical means

Definition statement

This place covers:

Operating or controlling locks or other fastening devices by other non-purely mechanical means, such as e.g. by bimetallic or memory-shaped elements, or by pneumatic or hydraulic means.

References

Limiting references

This place does not cover:

Opening a panic door under force or pressure on the surface of the door	E05B 65/102
Locking several vehicle wings simultaneously by pneumatic or hydraulic means	E05B 77/50
Pneumatic or hydraulic driven locks for vehicles and actuators or circuits therefor	E05B 81/10
Hydraulic power locks for wing closers	E05F 3/223
Power operated mechanism for wings with pressure medium	E05F 15/50

Informative references

Attention is drawn to the following places, which may be of interest for search:

Thermo-electric actuators	E05B 47/0009

E05B 53/00

Operation or control of locks by mechanical transmissions, e.g. from a distance

Definition statement

This place covers:

Locks operated by mechanical transmission including foot-operated locks and locks operated by flexible means, e.g. cables or Bowden cables.

Relationships with other classification places

- Bolts or fastening devices for wings, specially for doors or windows: E05C;
- Devices for moving wings into open or closed positions: E05F;

References

Limiting references

This place does not cover:

Flexible connections between lock parts in vehicles	E05B 79/20
Mechanical operating mechanisms for wings	E05F 9/00, E05F 11/00

Application-oriented references

Examples of places where the subject matter of this place is covered when specially adapted, used for a particular purpose, or incorporated in a larger system:

Means for transmitting linear movement in a flexible sheathing, e.g. Bowden mechanisms	F16C 1/10

Informative references

Attention is drawn to the following places, which may be of interest for search:

For simultaneously actuated bolts	E05B 63/14
For car boot lids or bonnets	E05B 83/24
For fuel inlet covers	E05B 83/34

E05B 55/00

Locks in which a sliding latch is used also as a locking bolt

Definition statement

This place covers:

Locks in which a sliding latch is used also as a locking bolt, e.g. cylindrical or tubular locks. It includes also locks in which the handle can be disconnected or locks in which the bolt is secured by the action of a trigger member cooperating with the frame.

References

Limiting references

This place does not cover:

Electrically disconnecting the handle	E05B 47/0676
A latch bolt being initially retained in an intermediate position and subsequently projected to its full extend when the wing is closed	E05B 63/202

Informative references

Attention is drawn to the following places, which may be of interest for search:

Devices for disconnecting the handle	E05B 13/005, E05B 13/101
Cylindrical or tubular latches	E05C 1/163

E05B 57/00

Locks in which a pivoted latch is used also as locking means

Definition statement

This place covers:

Locks in which a pivoted latch is also can be dead locked.

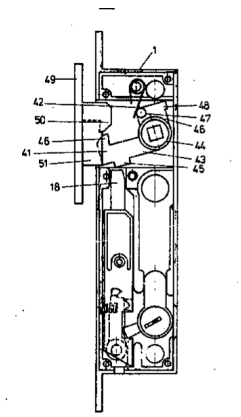

AU556425

E05B 59/00

Locks with latches separate from the lock-bolts or with a plurality of latches or lock-bolts

Definition statement

This place covers:

Locks with latches in addition to lock-bolts or dead bolts.

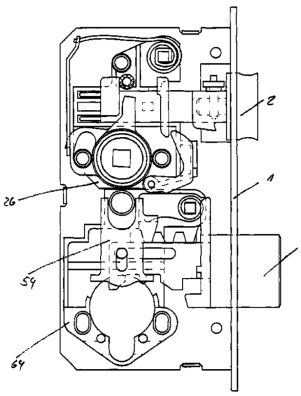

EP0792980

Relationships with other classification places

- Bolts or fastening devices for wings, specially for doors or windows: E05C.

References

Informative references

Attention is drawn to the following places, which may be of interest for search:

Bolts with multiple head	E05B 15/108
Locks in which a sliding latch is used also as a locking bolt	E05B 55/00
Other locks with provision for latching	E05B 61/00
Locks with a rotary bolt without provision of latching	E05B 63/0013
Locks with a pivoting bolt without provision of latching	E05B 63/0017
Mortise locks	E05B 63/08
Locks with several bolts	E05B 63/14
Automatic locks	E05B 63/20
Espagnolette locks	E05C 9/00

E05B 61/00

Other locks with provision for latching

Definition statement

This place covers:

Locks which provision of latching not covered by the groups E05B 55/00, E05B 57/00 or E05B 59/00.

E05B 63/00

Locks {or fastenings} with special structural characteristics

Definition statement

This place covers:

Locks or fastenings with special structural characteristics

Relationships with other classification places

Bolts or fastening devices for wings, specially for doors or windows: E05C

References

Application-oriented references

Examples of places where the subject matter of this place is covered when specially adapted, used for a particular purpose, or incorporated in a larger system:

Using bolts interlocking with notches for attaching vehicle seats to the vehicle chassis	B60N 2/01533
Safety devices for wings opening about a vertical as well as a horizontal axis	E05D 15/526

E05B 65/00

Locks {or fastenings} for special use {(for dishwashers A47L 15/4259; hatch fastenings B63B 19/24; for container closures B65D 55/02; for elevator doors B66B 13/16; for lids or covers of refuse receptacles B65F 1/1615; for laundry washing machines D06F 37/42, D06F 39/14; for two wings E05C 7/00; safety devices F16P 3/08; for furnaces F24C 15/022; coin freed locks G07F 17/12, G07F 17/14; switches operated by key or combination H01H 27/00)}

Definition statement

This place covers:

Locks or fastenings for special use.

References

Limiting references

This place does not cover:

Insulating, e.g. for limiting heat transfer	E05B 17/0075
Locks for vehicles	E05B 77/00 – E05B 85/00
Locks for sliding doors of vehicles	E05B 83/04, E05B 83/40
Buckles, similar fasteners for interconnecting straps	A44B 11/00
Slide fasteners	A44B 19/00
Door latches for dish washers	A47L 15/4259
Locking devices for vehicle seats	B60N 2/00
Hatch fastening in ships	B63B 19/24
Locking devices for container closures	B65D 55/02
Locking or fastening means for lids or covers of refuse receptacles	B65F 1/1615
Safety arrangements for laundry washing machines	D06F 37/42
Securing means for doors of laundry washing machines	D06F 39/14
Locks for two wings	E05C 7/00
Holding sliding wings open	E05C 17/60
Devices for holding the wing by magnetic attraction	E05C 19/16
Magnetic gaskets	E05C 19/161
Locking of doors, covers, guards acting in conjunction with the control or operation of a machine	F16P 3/08
Latches for doors specially adapted for stoves	F24C 15/022
Coin freed locks	G07F 17/12, G07F 17/14
Switches operated by a key	H01H 27/00

Application-oriented references

Examples of places where the subject matter of this place is covered when specially adapted, used for a particular purpose, or incorporated in a larger system:

Weight arrangement in locks	E05B 15/0093

Arrangements of fasteners for travelling bags	A45C 13/10
Drawers for tables, cabinets or like furniture	A47B 88/00
Coffin closures	A61G 17/02
Arrangement of water tight doors in bulkheads	B63B 43/24
Applications of locks for container closures	B65D 55/14
Locking devices for elevator doors or gates	B66B 13/16
Locking devices for manhole covers	E02D 29/1427
Connections for building structures with ratatable locking means	E04B 1/6183
Vertically sliding sectional doors	E05D 15/24
Wire gates	E06B 11/021
Gasproof doors or similar closures	**E06B57/14**
Covers or closures for pressure vessels	F16J 13/00
Details of doors or covers of refrigerators	F25D 23/028
Latching mechanisms for covers of portable computers	G06F 1/1679
Enclosures for switching arrangements	H02B 1/063

Informative references

Attention is drawn to the following places, which may be of interest for search:

Locks with fracturable glass or the like	E05B 39/025
Locks with visible indication as to whether the lock is locked or unlocked	E05B 41/00
Toggle fasteners	E05C 19/14

E05B 67/00

Padlocks (permutation locks E05B 37/00; {steering wheel padlocks B60R 25/022}); Details thereof

Definition statement

This place covers:

Padlocks; Details thereof

References

Limiting references

This place does not cover:

Permutation padlocks	E05B 37/0068, E05B 37/025, E05B 37/10, E05B 37/14
Chain cables or padlocks with alarms	E05B 45/005

Application-oriented references

Examples of places where the subject matter of this place is covered when specially adapted, used for a particular purpose, or incorporated in a larger system:

Anti-theft devices for vehicles operating on steering mechanism	B60R 25/02

Informative references

Attention is drawn to the following places, which may be of interest for search:

Hasp locks	E05B 65/48
Lockable hangers or hanger racks	E05B 69/006
Hasp fastenings	E05C 19/08

E05B 69/00

Devices for locking clothing; Lockable clothing holders or hangers ({anti-theft monitors E05B 73/0017; shoe hangers, clothing}, dress or hat holders in general A47G 25/00)

Definition statement

This place covers:

Devices for locking clothing, shoes, lockable hangers or hanger racks and lockable clothing hooks.

Relationships with other classification places

Shoe hangers, clothing, dress or hat holders: A47G 25/00

References

Limiting references

This place does not cover:

Chain cables or padlocks with alarms	E05B 45/005
Anti-theft tags or monitors	E05B 73/0017
Coin freed containers for clothing	G07F 17/12

Application-oriented references

Examples of places where the subject matter of this place is covered when specially adapted, used for a particular purpose, or incorporated in a larger system:

Shoe hangers	A47G 25/005
Dress holders	A47G 25/02
Cloth hooks	A47G 25/06
Hat holders	A47G 25/10
Clothing hangers	A47G 25/12

E05B 71/00

Locks specially adapted for bicycles, other than padlocks ({locks integral with holders for parking or storing bicycles B62H 3/00}; locks integral with cycles B62H 5/00)

Definition statement

This place covers:

Locks specially adapted for bicycles, other than padlocks

Relationships with other classification places

Locks integral with cycles, cycles stands: B62H

References

Limiting references

This place does not cover:

Locks integral with holders for parking bicycles	B62H 3/00
Locks integral with cycles	B62H 5/00
Supporting devices for attaching articles to cycles	B62J 11/00

E05B 73/00

Devices for locking portable objects against unauthorised removal; Miscellaneous locking devices {(motorcycle helmets A42B 3/0413, B62J 11/005; gun racks A47B 81/005; showcases with theft protection A47F 3/002; anti-theft means for peg-boards, grids or rods for hanging merchandise A47F 5/0861; show stands, hangers, shelves with provision against unauthorised removal A47F 7/024; for self-service hand-carts A47F 10/04; locking skis A63C 11/004; locking bolts, nuts or pins F16B 41/00)}

Definition statement

This place covers:

Devices for locking portable objects against unauthorised removal; Miscellaneous locking devices

Relationships with other classification places

- Special furniture, fittings or accessories for shops: A47F
- Vehicle fittings: B60R

References

Limiting references

This place does not cover:

Locks specially adapted for bicycles	E05B 71/00
Anti-theft arrangements for helmets	A42B 3/0413
Devices for storing or displaying riffles or guns	A47B 81/005
Show cases with theft protection	A47F 3/002

Anti-theft means for display panels	A47F 5/0861
Show stands with provision for preventing unauthorised removal	A47F 7/024
Anti-theft devices for skis or ski equipment	A63C 11/004
Covers cups or guards for traction coupling, hitches	B60D 1/60
Supporting devices for attaching articles to cycles	B62J 11/00

Application-oriented references

Examples of places where the subject matter of this place is covered when specially adapted, used for a particular purpose, or incorporated in a larger system:

Walking sticks with locks	A45B 1/04
Umbrella stands or holders	A47G 25/12
Cases for storing record carrier discs	G11B 33/0405

Informative references

Attention is drawn to the following places, which may be of interest for search:

Chain or cable locks	E05B 67/003
Lockable hangers or hanger racks	E05B 69/006
Hasp fastenings	E05C 19/08

E05B 75/00

Handcuffs {Finger cuffs; Leg irons; Handcuff holsters; Means for locking prisoners in automobiles (retaining devices for the body or body parts A61F 5/37)}

Definition statement

This place covers:

Handcuffs; Finger cuffs; Leg irons; Handcuff holsters; Means for locking prisoners in automobiles

References

Application-oriented references

Examples of places where the subject matter of this place is covered when specially adapted, used for a particular purpose, or incorporated in a larger system:

Restraining devices for body parts	A61F 5/37

E05B 77/00

Vehicle locks characterised by special functions or purposes (locks specially adapted for bicycles E05B 71/00; locking arrangements for non-fixed vehicle roofs B60J 7/185)

Glossary of terms

In this place, the following terms or expressions are used with the meaning indicated:

latching/unlatching	holding/release of a bolt element that a wing or door can be opened. A typical vehicle lock is unlatched when a detent, pawl or ratchet releases the fork shaped bolt
locking/unlocking	preventing/allowing an unlatching action. In the locked state an unlatching action, normally done by actuating a handle or grip, is prevented. A locked door or wing is at least prevented from being unlatched from outside of the vehicle

E05B 77/02

for accident situations

Definition statement

This place covers:

Locks designed to perform or prevent certain functions in case of accidents

E05B 77/04

Preventing unwanted lock actuation, e.g. unlatching, at the moment of collision

Definition statement

This place covers:

Locks, where an unwanted unlatching is prevented in case of an accident. One particular example is that a door handle could be accidentally actuated in case of a collision against the side door of a vehicle.

One way of preventing such an unwanted actuation is the provision of an extra long bowden cable. The extra length thereby prevents unwanted actuation, if a vehicle part is deformed.

The figure shows another construction, which should avoid actuation at the moment of a collision. Two parallel connecting rods (10, 11) are provided, such that if one of the rods (10,11) would be deformed

during an accident, then it could not cause the lever (9) to turn since the second lever (11) would resist this by an equal force acting to turn the lever (9) in the opposite direction.

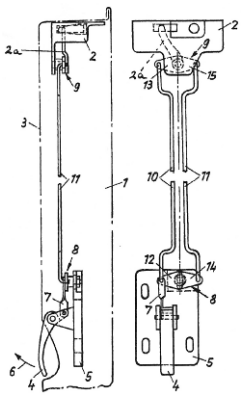

E05B 77/06

by means of inertial forces

Definition statement

This place covers:

Means for preventing actuation caused by inertial forces acting on lock parts in case of an accident. Typically, a weight arrangement is used, which is actuated in order to block a handle against movement at the moment of collision.

The figure shows an example whereby at the moment of a collision a force (29b) would cause a mass-lever (30) to rotate counterclockwise. A blocking member (34) of the mass-lever (30) thereby prevents the handle (37) to be actuated by an inertial force (32b).

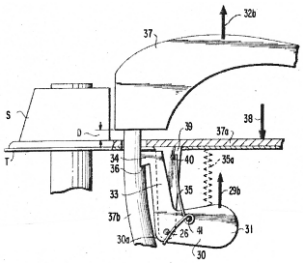

E05B 77/08

Arrangements for protection of pedestrians

Definition statement

This place covers:

Locks designed for pedestrian protection. In practice, it almost always concerns engine compartment locks (E05B 83/24)

The example in the figure concerns an active front hood system, whereby both the hinge part (41) and the lock (25) are designed such that they are automatically raising the hood (13) in case of a collision with a pedestrian. This allows the front zone of the vehicle to deform easier.

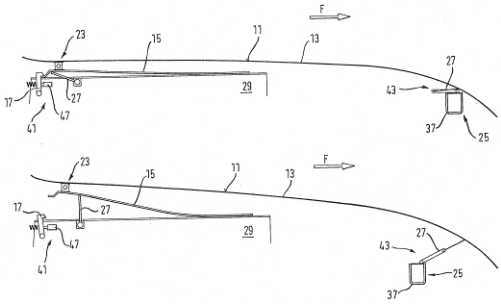

References

Informative references

Attention is drawn to the following places, which may be of interest for search:

Arrangements or fittings on vehicles for protecting non-occupants of a vehicle, e.g. pedestrians, in case of accidents	B60R 21/34

E05B 77/10

Allowing opening in case of deformed bodywork, e.g. by preventing deformation of lock parts

Definition statement

This place covers:

The general problem that a wing/door is frequently deformed at an accident. In this subgroup the lock is protected in such a way that it can be unlatched/unlocked even if the door is deformed. This is often achieved by protective plates, shields and reinforcements.

Another alternative is to design lock parts in order to be deformed in a controlled way, such that they can still function after an accident. In the figure the bolt (8) and the detent (13) are provided with deformation zones (17, 25, 26). In case of an accident the bolt and the detent will not break. They will rather be deformed plastically such that they will still function properly after the collision.

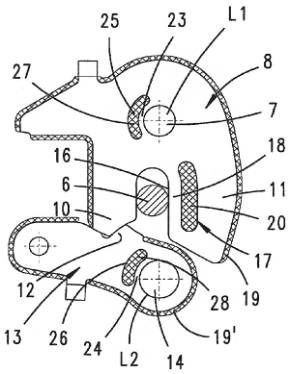

E05B 77/12

Automatic locking or unlocking at the moment of collision

Definition statement

This place covers:

Arrangements whereby a particular action is forced to take place in case of an accident. The situation is more or less the opposite of E05B 77/04 in which a particular action is prevented.

A typical example is that a locking or an unlocking action is initiated at the accident. The choice of action depends on the security philosophy. Sometimes an unlocked door, which allows easy escape, is preferred and sometimes the preference is a locked door, which prevents (unwanted) opening of the door.

Another frequent example from this class is locks which after an accident remain locked for a certain time and then automatically move to an unlocked condition.

The example of the figure shows a system whereby a sensing means (50) is designed to pivot in case of an accident. This releases the bolt element (26) which is moved by a spring (52) into a striker (56). The door is therefore automatically locked at the moment of an accident.

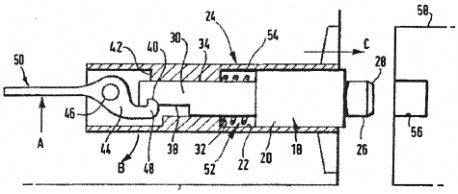

E05B 77/14

Specially controlled locking actions in case of open doors or in case of doors moved from an open to a closed position, e.g. lock-out prevention or self-cancelling

Definition statement

This place covers:

Locks which usually concern the problem that vehicle keys can be left inside the vehicle, if the door would be accidentally closed in a locked condition.

E05B 77/16

Preventing locking with the bolt in the unlatched position, i.e. when the door is open

Definition statement

This place covers:

Locks in which the bolt position is sensed e.g. mechanically, magnetically or electrically. An unlatched bolt should thereby indicate an open door, and in this situation the locking system is blocked in order to make it possible to lock the door only after it has been closed.

The example of the figure illustrates this by a detent (20) having a cam (46) and a locking lever (24) having a shoulder (48).

When the bolt (14) is in its open position, the locking lever (24) cannot move to the locked position, since the shoulder (48) of the locking lever (24) is blocked by the cam (46) on the detent.

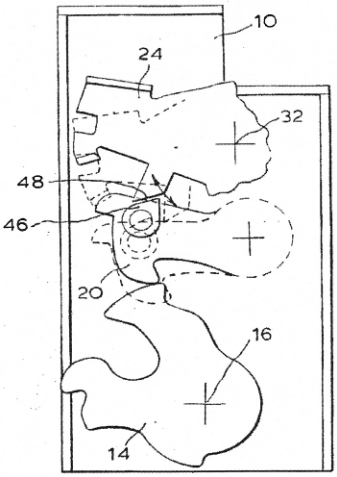

E05B 77/18

Keyless locking with self-cancellation, e.g. resulting in an unlocking action when the door is being closed

Definition statement

This place covers:

Locks where the closing of the door always results in an unlocking action. The lock will thus never be in a locked state after having closed the door. This means that the door can always be unlatched after closing.

E05B 77/20

Override of self-cancellation, e.g. by actuation of the handle while the door is being closed

Definition statement

This place covers:

Arrangements whereby the automatic unlocking action can be prevented by overriding means, which require an additional action by the user, e.g. that the door handle is actuated during the closing of the door.

The user can thus decide, that the door should remain locked after closing, but this choice requires that a certain action is carried out during the closing. This makes it less likely, that the door is by mistake closed in a locked state.

According to the exemplifying figures, a lever (60) is actuated by a handle and can be used for unlatching the lock, if a release lever (64) can hit a pin (42) on the detent.

A locking lever (66) can move the release lever (64) to a locked position in which it will not hit the pin (42) as shown in the lower figure. A cam element (92a, 92b) rotates together with the actual latch bolt.

If the lock is brought to the locked position when the door and thereby also the bolt are in the open position, then the closing of the door will rotate the bolt to the latched position. The cam (92b) will therefore act on an intermediate element (94), which brings the locking lever (66) back to the unlocked position.

If however the handle lever (60) is actuated during the closing of the door, then the cam (92b) will not be able to contact the intermediate3 element (94) as shown in the right-hand figure. The lock will thereby stay in the locked position.

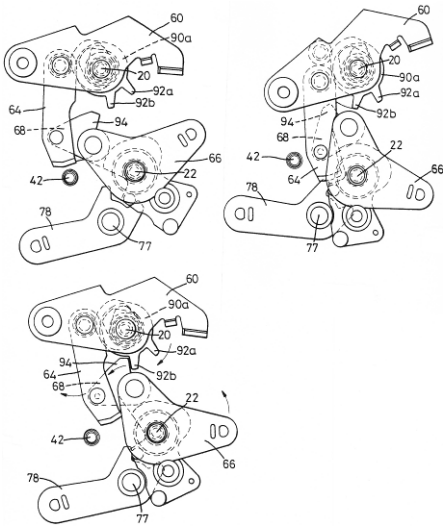

E05B 77/22

Functions related to actuation of locks from the passenger compartment of the vehicle

Definition statement

This place covers:

Certain functions linked to the inside actuation of locks.

References

Informative references

Attention is drawn to the following places, which may be of interest for search:

Sill-buttons, garnish buttons or inside door lock knobs	E05B 85/08
Inner door handles	E05B 85/12

Special rules of classification

Constructional details of the inside actuation means, e.g. inner door handles, sill buttons or lock knobs, are classified in group E05B 85/08 and E05B 85/12.

E05B 77/24

preventing use of an inner door handle, sill button, lock knob or the like

Definition statement

This place covers:

Essentially the subjects "child safety" and "super-locking/double-locking". Even though the general purpose of preventing an inside handle from being used is the same for these both functions, there is one fundamental difference.

Child safety prevents the use of an inside handle at any time, i.e. the inside handle can never be used regardless if the door is unlocked or locked from the outside. A double-locked/super-locked door has an inside handle, which cannot be used, when the door is locked from the outside.

E05B 77/26

specially adapted for child safety

Definition statement

This place covers:

Locks which prevent all use of an inside handle, when the child safety is activated. This means that the inside handle cannot be used regardless if the door is unlocked or locked from the outside.

The figure shows a child safety arrangement with an actuation button (7) of the push-push type. Every time the button (7) is pushed, the system changes between an active and an inactive state.

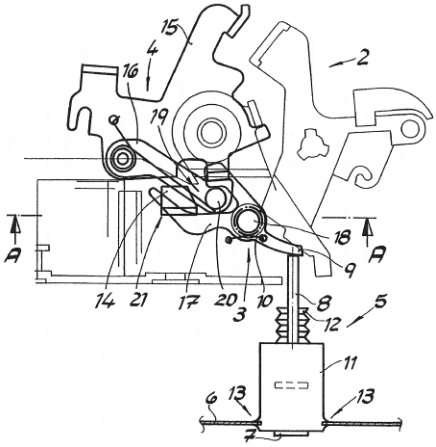

E05B 77/28

for anti-theft purposes, e.g. double-locking or super-locking

Definition statement

This place covers:

Locks having an inside handle, which cannot be used, when the door is locked from the outside. It is therefore not possible to open the door by breaking a window in order to reach the inside handle.

The double-locking can be achieved either by uncoupling or blocking of the inside lock system and inside handle.

In the figure, an example of a blocking system is shown. A double-lock arrangement (9, 12) prevents any actuation of an inside lock knob rod (7).

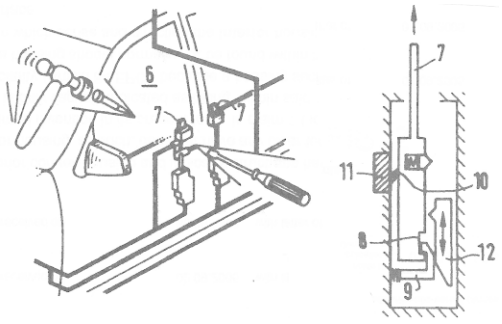

E05B 77/30

allowing opening by means of an inner door handle, even if the door is locked

Definition statement

This place covers:

A combined unlocking and unlatching function of the inside door handle. This is sometimes achieved by one single actuation of the handle. Another possibility is that a first actuation of the handle unlocks the door and that the second actuation unlatches the door.

The figure shows an example of an inside handle (7), which can be moved from a neutral position (A) to an unlatching position (B). If the door would be locked, then the same handle can be moved from the neutral position (A) to an intermediate position (C) and back to the neutral position (A) in order to unlock the lock. The handle can thereafter be actuated one more time to position (C) for unlatching.

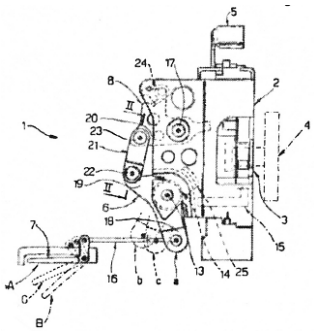

E05B 77/32

allowing simultaneous actuation of locking or unlocking elements and a handle, e.g. preventing interference between an unlocking and an unlatching action

Definition statement

This place covers:

Arrangements addressing the well known problem that an unlocking (or locking) action can fail, if the handle of the door is actuated at the same time.

Often a second unlocking action is required. This problem is normally avoided by an energy accumulation arrangement of springs.

E05B 77/34

Protection against water, e.g. against water ingress (closures or guards for keyholes E05B 17/14)

Definition statement

This place covers:

Means offering protection against weather influence. This can for example be achieved by a totally closed lock housing or by arranging some parts of the lock in a "wet compartment" and other parts in a "dry compartment". Another type of weather protection concerns means preventing freezing of the lock in cold conditions.

In the figure, a "wet area" (N) of the lock comprises the main lock elements, i.e. the bolt (3a) and the detent (3b). A sensing arrangement (7a, 7b) for determination of the detent position is housed in a "dry

area" (T) o the lock. A single thin link rod (50) extends from the "wet area" to the "dry area" through a small opening (80).

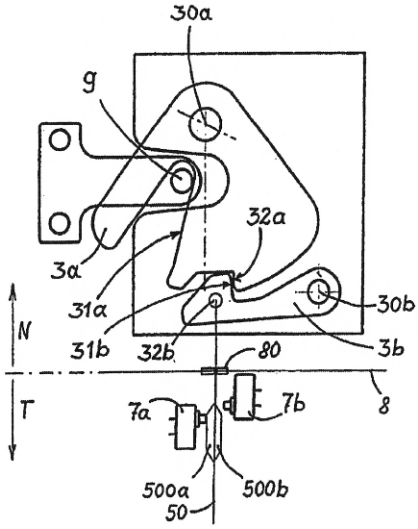

References

Limiting references

This place does not cover:

Closures or guards for keyholes	E05B 17/14

E05B 77/36

Noise prevention; Anti-rattling means

Definition statement

This place covers:

Ways of reducing noise and vibrations in locks. The example in the figure shows a lever element (8) of a lock. The end positions of the lever are defined by stretching of cord elements (3, 3a). The use of cords for this purpose reduces the noise of the lever (8) reaching its end position.

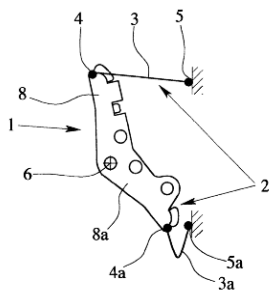

E05B 77/38

Cushion elements, elastic guiding elements or holding elements, e.g. for cushioning or damping the impact of the bolt against the striker during closing of the wing

Definition statement

This place covers:

Elastic blocks, elastic guiding elements etc. which are typically placed in the zone of engagement between the bolt and the striker. One function of such blocks can thus be to make an impact between moving elements softer.

Another purpose can be to hold for example a striker firmly fixed in the latched position. This prevents noise due to rattling.

In the figure, an elastic cushion means (30, 40) defines a seat for firmly holding the striker (2).

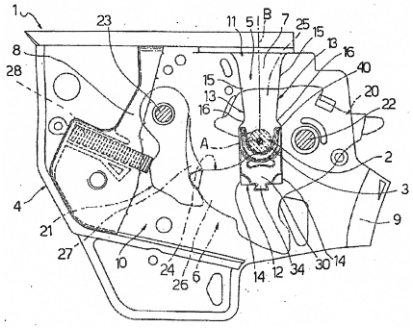

E05B 77/40

Lock elements covered by silencing layers, e.g. coatings

Definition statement

This place covers:

Bolts, strikers, detents etc. which are covered by a (thin) anti-noise coating/layer. One rather typical example is a metal bolt with a plastic coating.

According to the exemplifying figure, a coating (16) of elastically deformable material allows any direct contact between the base plate (2) of the striker and the bodywork of the vehicle. The noise produced during closing of the lock is thereby reduced.

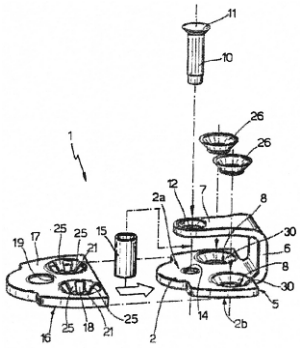

E05B 77/42

Means for damping the movement of lock parts, e.g. slowing down the return movement of a handle (E05B 77/38 takes precedence)

Definition statement

This place covers:

Arrangements for damping of movements. This class does however not cover elastic blocks/guides (E05B 77/38). It is rather directed to dampers, for example of the fluid type. A typical example is a damper, which slows down the return movement of a handle.

The return movement of the handle in the figure is slowed down by a fluid damper (30).

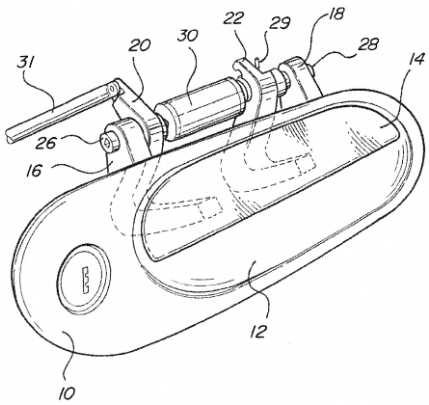

E05B 77/44

Burglar prevention, e.g. protecting against opening by unauthorised tools (E05B 77/28 takes precedence)

Definition statement

This place covers:

Locks where an arrangement has been provided, which prevents manipulation by burglar tools. Typical examples are protective shields, completely closed casings, or plates which deflect tools away from the essential lock parts.

The figure shows a hollow shield (34) which covers and protects the locking lever (14) and the linkage (20,24) between the locking lever (14) and the lock cylinder (30).

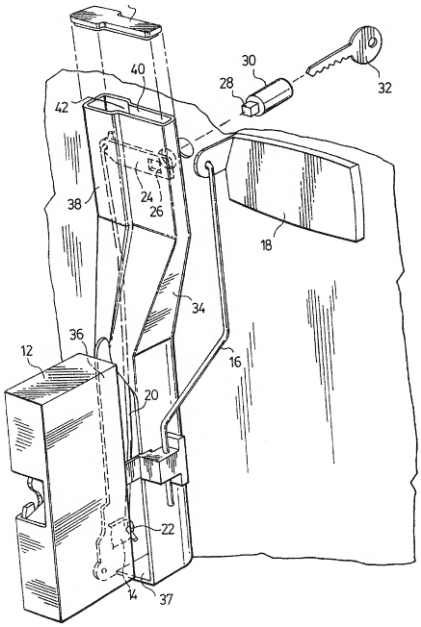

E05B 77/46

Locking several wings simultaneously

Definition statement

This place covers:

Central locking arrangements. The lower subgroups concern the main families of such arrangements, and the example in the figure therefore shows a more unusual central lock configuration.

A mechanical central lock arrangement uses actuation cables (110,112) for locking/unlocking two doors by a single action performed at one of the two doors.

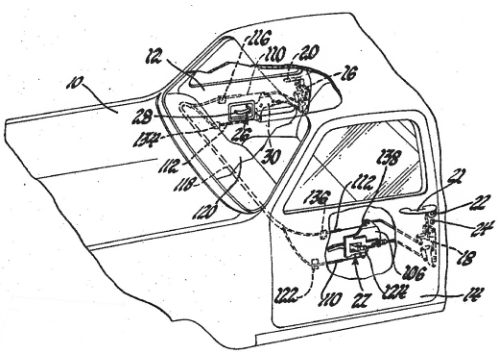

E05B 77/48

by electrical means

Definition statement

This place covers:

Electrical circuits for control of several locks in a central locking system. This subgroup is essentially directed to the overall electric/electronic circuits for the control of a central door lock system.

In the example each door has an electrically controlled lock module (2), and these four lock module are connected (19) to a central processing and control unit (18)

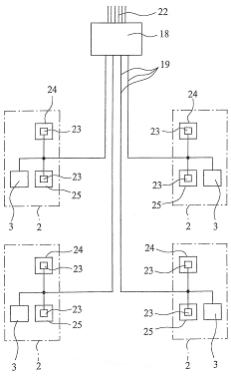

E05B 77/50

by pneumatic or hydraulic means

Definition statement

This place covers:

Pneumatic or hydraulic circuits for control of several locks in a central locking system. This subgroup is essentially directed to the overall circuits, as exemplified by the figure wherein a number of actuators (1-4) is controlled by a central control system.

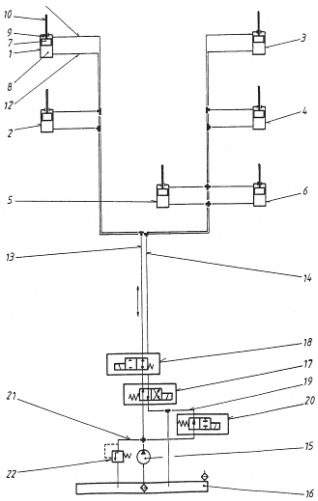

E05B 77/52

Locking one wing by shutting another

Definition statement

This place covers:

Sequential lock control of a vehicle door system. As shown in the figure, when a first door (A) is unlatched a second door (B) is unlocked, and when the first door (A) is closed and its bolt moves to a latched position, then the bolt of the second door (B) is automatically locked.

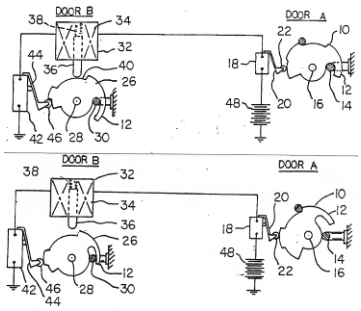

References

Informative references

Attention is drawn to the following places, which may be of interest for search:

Wings which abut when closed, whereby a fastening for one wing is actuated or controlled by closing the other wing	E05C 7/06

E05B 77/54

Automatic securing or unlocking of bolts triggered by certain vehicle parameters, e.g. exceeding a speed threshold (triggered by vehicle collision E05B 77/12)

Definition statement

This place covers:

Locking of vehicle doors, based on the state of the vehicle systems in general. The state of the door locks could thereby be decided based on for example the speed of the vehicle, the status of the ignition lock, the selected gear or the actuation of the vehicle brakes.

E05B 79/02

Mounting of vehicle locks or parts thereof

Definition statement

This place covers:

Various aspects of the mounting of lock elements or mounting of the lock itself. It is to be noted, that this subgroup does not cover the connection of movable parts to each other (E05B 79/10).

E05B 79/04

Mounting of lock casings to the vehicle, e.g. to the wing

Definition statement

This place covers:

Ways of attaching the lock casing to the vehicle. The casing is thereby often mounted to the wing, but it may also concern the mounting of casings on the fixed frame.

According to the example of the figure, bolt elements (36) are used as axis for e.g. the bolt and the detent of the lock. At the same time these bolt elements (36) have threaded parts (50) which are used for mounting the lock casing (22) to the vehicle.

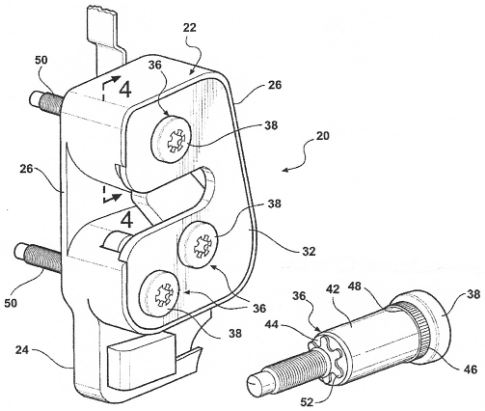

E05B 79/06

Mounting of handles, e.g. to the wing or to the lock

Definition statement

This place covers:

Ways of mounting the handles specific elements in the lock. The figure shows a system using two different screw arrangements (6, 7) for attaching the handle to the wing.

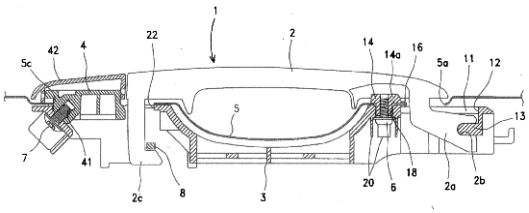

E05B 79/08

Mounting of individual lock elements in the lock, e.g. levers

Definition statement

This place covers:

Ways of mounting specific elements in the lock. According to the example in the figure, a specific type of pivot axis (32) is used for mounting the bolt (12) and the detent (14).

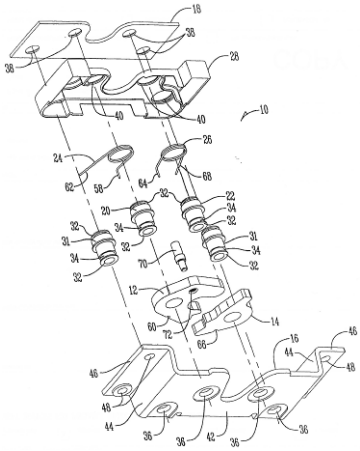

E05B 79/10

Connections between movable lock parts

Definition statement

This place covers:

Various ways of connecting movable lock parts to each other. The lower subgroups cover he most frequently represented connection aspects.

E05B 79/12

using connecting rods

Definition statement

This place covers:

Elongated connection elements. According to the example shown in the figure a connecting rod (2) is provided with an extension (3) having a hooked end (4). If the door and the rod would be deformed,

e.g. due to a collision, then the hooked extension of the rod can cooperate with the edge of an opening (6) such that unwanted operation of the lock occurs.

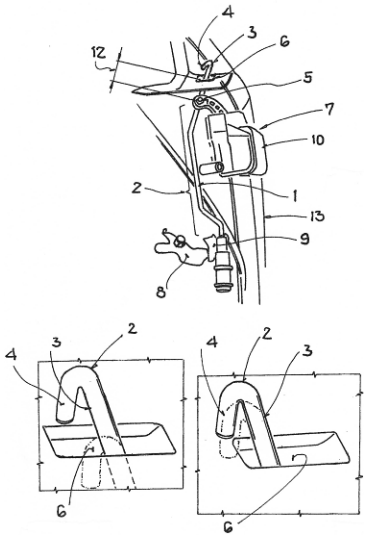

E05B 79/14

the rods being linked to each other

Definition statement

This place covers:

Ways of connecting rods to each other, as exemplified by a connecting element (40), which links two operating rods (31, 32) to each other.

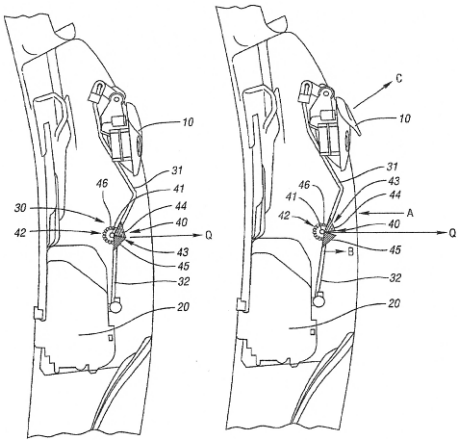

E05B 79/16

characterised by the means for linking the rods to other lock parts, e.g. to levers

Definition statement

This place covers:

Details of how connecting rods are fixed to other lock elements. This would usually be the connection to a handle element or to a lever element in the lock housing. It can also concern the details of how a rod is connected to the output member of a powered actuator.

According to the example, a rod clip has one part (23), which is connected to a lever of the lock mechanism, while another part (22,32) connects to an operating rod (40).

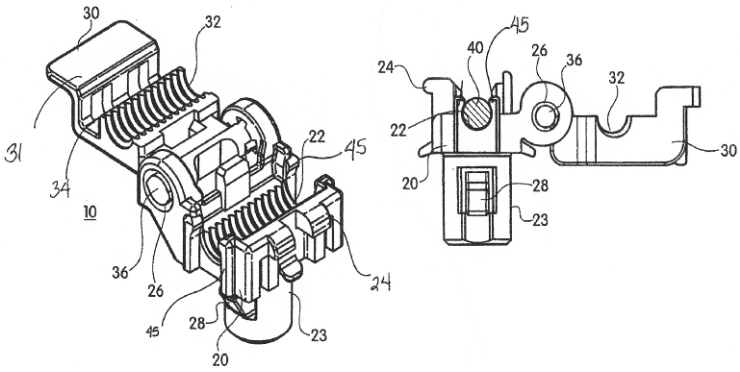

E05B 79/18

Rod guides

Definition statement

This place covers:

Means for guiding long rod elements. In the case of fairly long rod elements it might be necessary to provide guiding means along the length of the rod. This is of particular importance in order to prevent bending of the rod, when it is compressed during a pushing action.

A typical example of such a rod guide (7) is shown in the figure.

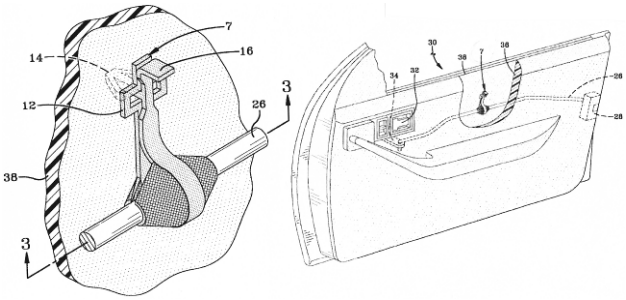

E05B 79/20

using flexible connections, e.g. Bowden cables

Definition statement

This place covers:

Non-rigid connections between lock parts. Bowden cables are frequently used in these situations, but also wires, ropes or the use of springs as connection means are covered by this subgroup.

The figure shows a specific type of Bowden-cable connection, whereby a cable (32) is fixed at one end (36). Tensioning the cable (36) will therefore cause the sheath to be straightened and thereby push on a lever (12) of the lock.

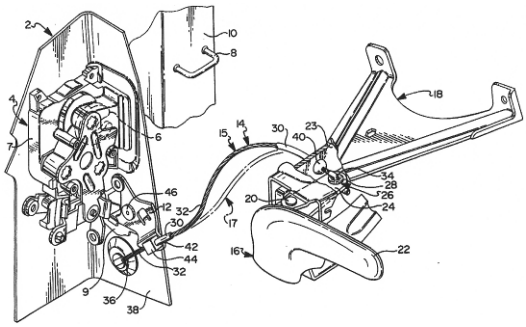

References

Informative references

Attention is drawn to the following places, which may be of interest for search:

Flexible shafts; … Mechanical means for transmitting movement in a flexible sheathing	F16C 1/00

E05B 79/22

Operative connections between handles, sill buttons or lock knobs and the lock unit (mounting of non-movable base elements of a handle to a lock E05B 79/06)

Definition statement

This place covers:

Details of how hand actuated elements are connected to lock elements. It is to be noted that E05B 79/12 and E05B 79/20 quite often will cover the connection of handles to a lock situated at a distance more or less far away.

This subgroup will consequently for example cover operative, i.e. movable, connections where a handle is more or less directly fixed to the lock. Other elongated connections than rods or flexible elements will also be covered by this subgroup.

References

Limiting references

This place does not cover:

Mounting of the non-movable base elements of a handle to a lock	E05B 79/06

E05B 81/00

Power-actuated vehicle locks

Glossary of terms

In this place, the following terms or expressions are used with the meaning indicated:

latching/unlatching	holding/release of a bolt element that a wing or door can be opened. A typical vehicle lock is unlatched when a detent, pawl or ratchet releases the fork shaped bolt
locking/unlocking	preventing/allowing an unlatching action. In the locked state an unlatching action, normally done by actuating a handle or grip, is prevented. A locked door or wing is at least prevented from being unlatched from outside of the vehicle

E05B 81/02

characterised by the type of actuators used

Definition statement

This place covers:

Various types of actuators, whereby the most common alternatives are covered by the lower subgroups.

One example of a less common power driving means is shown in the figure, which shows a pyrotechnic charge (10) provided for bringing a bolt (4) or a connecting rod (24) to an unlocked position in case of an accident.

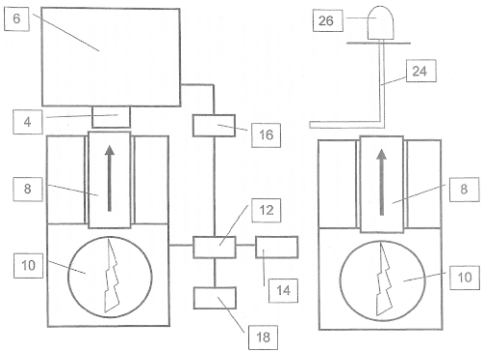

E05B 81/04

Electrical (electrical circuits E05B 81/54)

Definition statement

This place covers:

Actuators driven by electricity. The figure shows a lock with a handle (3), which can release a bolt (2) from a striker (6). The bolt (2) can also be released by electrically heating a shape memory alloy

actuator wire (9). This heating shrinks the actuator wire, and the bolt (2) will consequently be released from the striker (6).

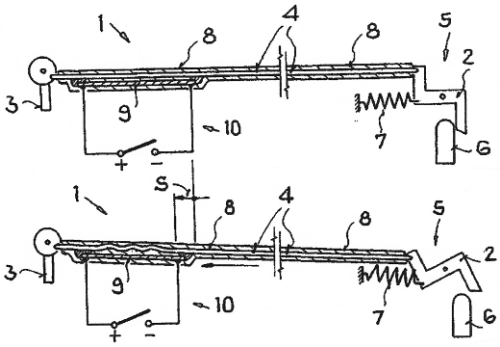

E05B 81/06

using rotary motors

Definition statement

This place covers:

Electrically driven motors, as exemplified by the motor (2) of the figure.

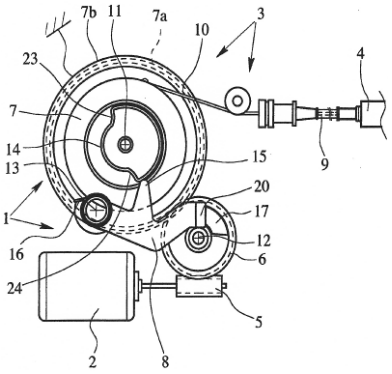

E05B 81/08

using electromagnets or solenoids

Definition statement

This place covers:

Electromagnets or solenoids, most often of the linear type. However, as the figure exemplifies, also rotary electromagnets (10) are used for vehicle lock actuation.

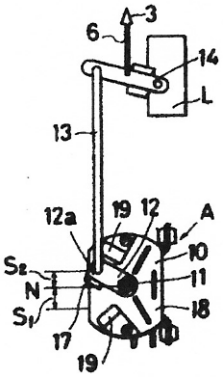

E05B 81/10

Hydraulic or pneumatic (hydraulic or pneumatic circuits E05B 81/52)

Definition statement

This place covers:

Actuators of the hydraulic or pneumatic type. In the figure, a pneumatic actuator (8) is used for powered actuation of a boot lid lock.

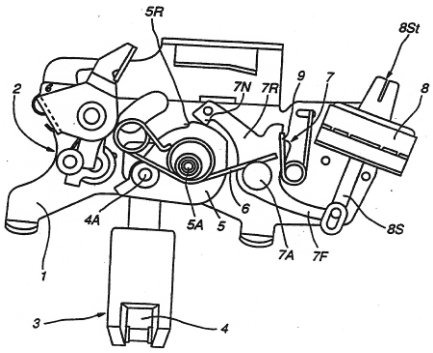

E05B 81/12

characterised by the function or purpose of the powered actuators

Definition statement

This place covers:

Various ways of using an actuator in a vehicle lock. These uses are thereby in principal defined depending on which lock part(s) the actuator is connected to.

E05B 81/14

operating on bolt detents, e.g. for unlatching the bolt

Definition statement

This place covers:

A typical vehicle lock comprises a fork-shaped rotary latch bolt, which is kept in its latched position by a detent. In this subgroup the power actuator releases the detent of the bolt and consequently an unlatching takes place. The result of the powered actuation is thus that the door is free to be opened.

The figure shows an actuator (12), which drives cam elements (17) through a geared transmission. The cam elements (17) act on a detent (2) in order to unlatch the bolt (1).

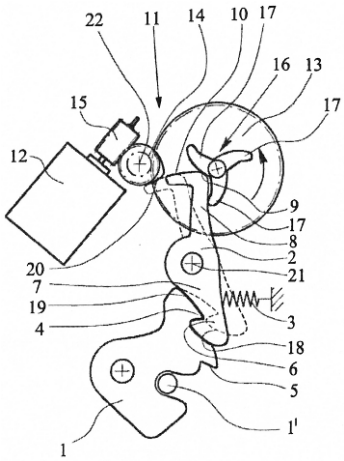

E05B 81/16

operating on locking elements for locking or unlocking action

Definition statement

This place covers:

Actuators which achieve the movement of a locking element (typically a locking lever) between a locked and an unlocked position.

The actuator consequently moves the lock between an unlocked state wherein the bolt is allowed to move and a locked state in which the movement of the bolt is prevented.

The movement of the bolt is thus not directly influenced by the actuator. A very common example in this subgroup is the powered locking/unlocking of central-locking arrangements.

According to the figure, a locking lever (10) is pivotally mounted on the output axis (12) of an actuator (14). The locking lever (10) can be moved between a locked and an unlocked position by means of the actuator (14).

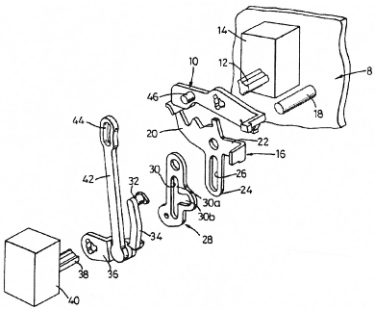

E05B 81/18

to effect movement of a bolt or bolts (E05B 81/20 takes precedence)

Definition statement

This place covers:

Actuator acting on the bolt in order to move it, normally from a position in which it holds the door closed to a position in which the door can be opened, or vice-versa. It could thereby concern both latch bolts and dead bolts.

The figure shows an actuator (108), which drives a lock bolt (124) between a locked and unlocked position.

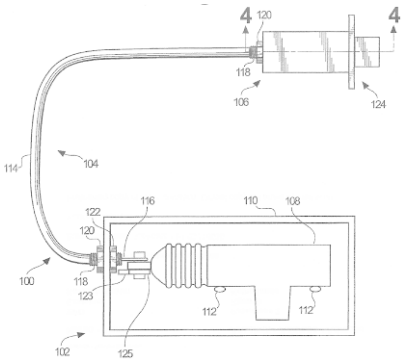

References

Informative references

Attention is drawn to the following places, which may be of interest for search:

Adaptation of locks, latches, or parts thereof, for movement of the bolt by electromagnetic means	E05B 47/02

E05B 81/20

for assisting final closing or for initiating opening

Definition statement

This place covers:

Pulling the door tight or pushing the door slightly open. It is to be noted, that this subgroup covers the cases where these (small) movements of the door are achieved by the lock. This should not be confused with the powered closing /opening of for example E05F 15/00, where the wing is moved from a (more or less) open position to a (more or less) closed position.

The example illustrates this by an actuator (21), which uses a pushing element (22) in order to assist movement of a bolt from a half-latched to a fully-latched position.

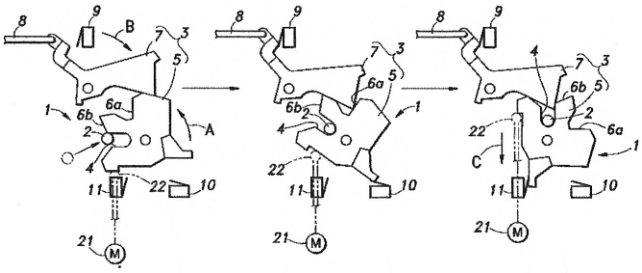

E05B 81/22

by movement of the striker

Definition statement

This place covers:

A movable striker for achieving the final closing or the initiated opening. A typical example is that after a first engagement between a striker and a bolt, the striker is moved by an actuator in order to further pull the wing tight.

The exemplifying figure shows an actuator in the form of an electric motor (8). When an axis (9) is turned by the motor (8), a pin (6) moves in an inclined slot (5) of a striker base (2). The actual striker (3) can thereby be driven by the motor (8) for assisting the movement of the door to a fully closed position.

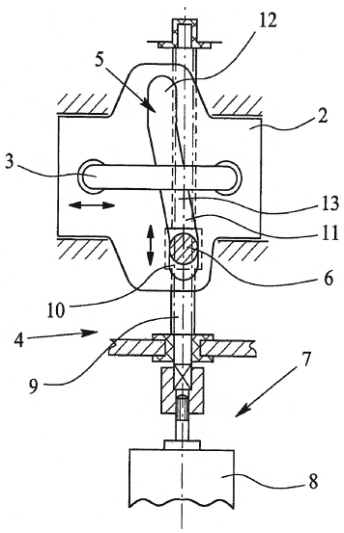

E05B 81/24

characterised by constructional features of the actuator or the power transmission

Definition statement

This place covers:

Various individual aspects of actuator details and transmission constructions.

E05B 81/26

Output elements

Definition statement

This place covers:

Different types of actuator output elements. It thereby essentially concerns the final element in the kinematic chain of the actuator device. Such an output element is then typically connected to elements of a vehicle lock, either directly or via further connecting means. The lower subgroups E05B 81/28 and E05B 81/30 relate to the two most common types of output members.

E05B 81/28

Linearly reciprocating elements

Definition statement

This place covers:

Output elements which move linearly, as exemplified by the sliding output member (105) in the figure.

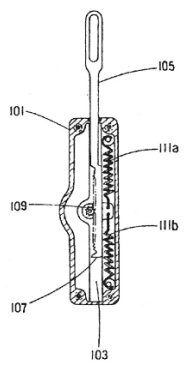

E05B 81/30

Rotary elements

Definition statement

This place covers:

Output elements which rotate, as exemplified by rotatable output members (10,12) which both rotate around axis (13) in the figure.

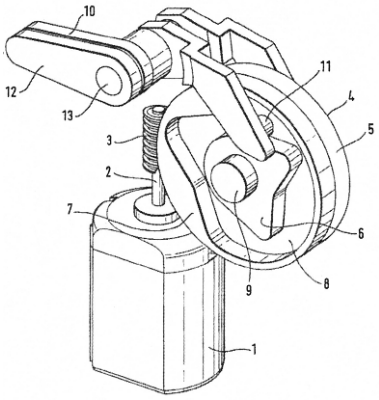

E05B 81/32

Details of the actuator transmission

Definition statement

This place covers:

Various elements in the kinematic chain before the actuator output member. Different typical kinematic elements are the subject of the lower subgroups E05B 81/34 – E05B 81/46.

E05B 81/34

of geared transmissions

Definition statement

This place covers:

Geared elements in the kinematic chain of the actuator, as exemplified by the toothed gear elements (8) which are driven by the worm-screw (19).

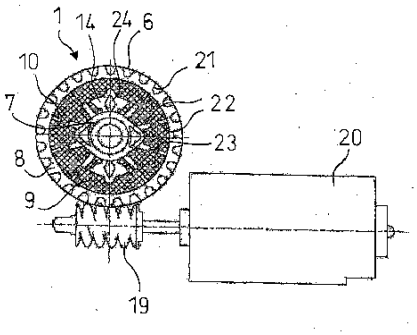

E05B 81/36

Geared sectors, e.g. fan-shaped gears

Definition statement

This place covers:

Elements in the shape of a sector with gears on its outer rim. An example of such a sector (10) is shown in the figure.

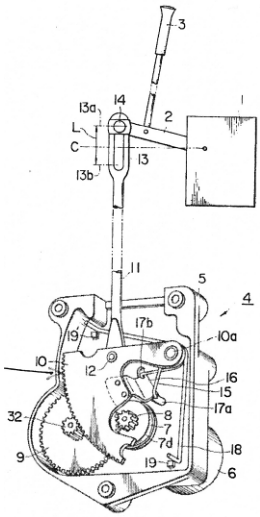

E05B 81/38

Planetary gears

Definition statement

This place covers:

The use of planetary gear transmission in actuators, as exemplified by the figure.

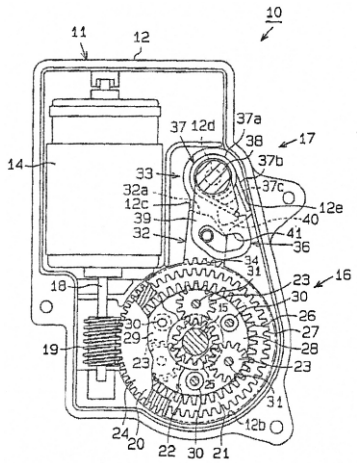

E05B 81/40

Nuts or nut-like elements moving along a driven threaded axle

Definition statement

This place covers:

Transmissions of the type where a nut-like element (6) slides along a threaded rotating axle (4) as exemplified by the figure.

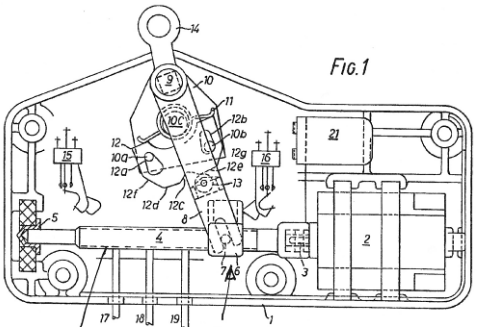

E05B 81/42

Cams

Definition statement

This place covers:

Cam-like transmission elements, for example a motor driven cam (34), which is used for transmitting a movement to elements of the actual lock.

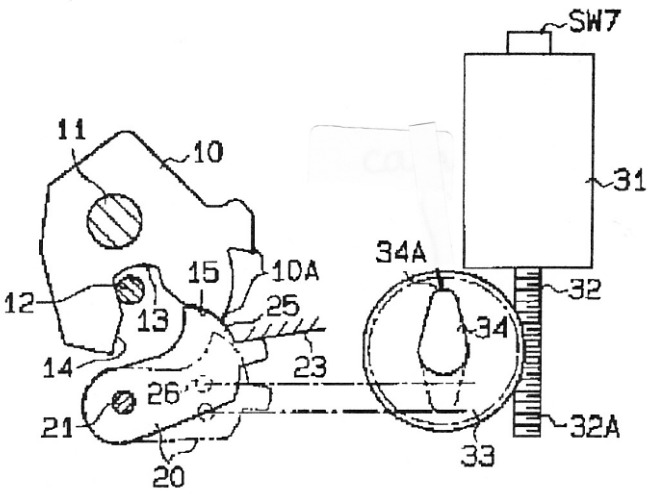

E05B 81/44

in the form of grooves

Definition statement

This place covers:

The use of the contour of a groove as cam element for transmission of a movement, as exemplified by the groove (3) in the figure.

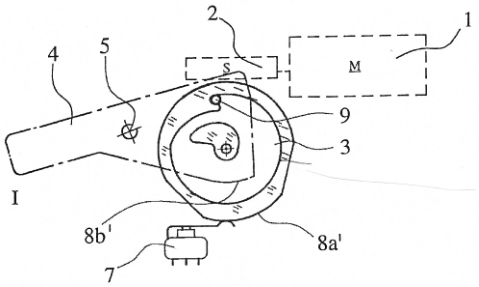

E05B 81/46

Clutches

Definition statement

This place covers:

Transmissions comprising some kind of engagable/releasable clutch arrangement. In the figure, a clutch element (23) engages a groove (21) in a driven element (13), when a motor driven element (9) starts rotating.

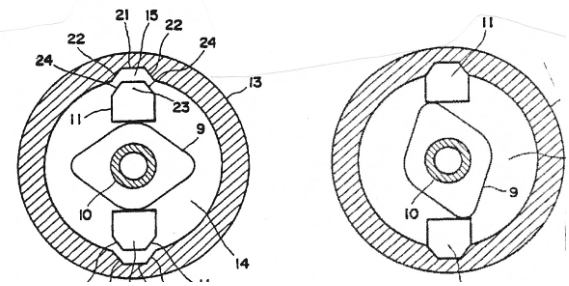

E05B 81/48

Actuators being driven in a single direction

Definition statement

This place covers:

Actuators moving only in one direction. From a starting position, the actuator moves continuously in one step or in several steps, always in the same direction, until it arrives back at the starting position again.

One example can be seen in the figure, where the motor (2) and the actuating element (8) can only turn in one direction (3,9). An electric arrangement (17) is provided for minimizing the back-drive when the drive pin (10) hits an abutment stop (12). When the detent pawl (11) has moved further clock-wise, then the actuator can continue to move in its single driving direction (3,9).

It is to be noted, that essentially the whole movement cycle should be power actuated. If for example a significant part of the movement is achieved by e.g. a mechanical spring, then the subgroup E05B 81/50 takes precedence.

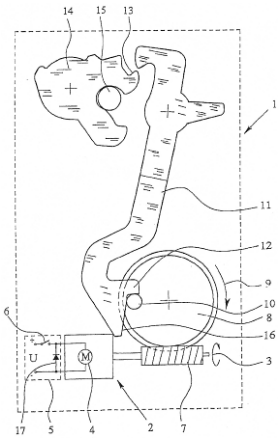

E05B 81/50

Powered actuators with automatic return to the neutral position by non-powered means, e.g. by springs

Definition statement

This place covers:

Actuators which are power driven to move from a neutral position to an active position, and the return movement to the neutral position is provided by non-powered means.

Examples of such arrangements can for example be a linearly moving solenoid, whereby an output member is moved electro-magnetically from a neutral position to an active position. When the power later is cut, a spring is arranged for moving the output member.

In the figure a geared transmission is moved by powered means to an active position. At the same time a geared rack (130) is moved, and this compresses spring (146). When the power is cut, the accumulated energy of the compressed spring (146) moves the rack (130) in the opposite direction such that the actuator returns to its normal position.

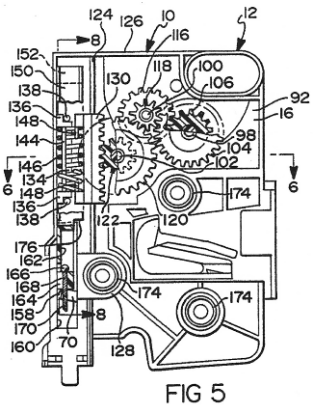

FIG 5

E05B 81/52

Pneumatic or hydraulic circuits (for locking several wings simultaneously E05B 77/50)

Definition statement

This place covers:

Hydraulic or pneumatic circuits of vehicle locks. This subgroup concerns the overall circuits (pipes, valves pumps etc.) providing pressurized fluid to the actuators, while the structural elements of hydraulic/pneumatic actuators can be found in E05B 81/10.

In the figure a typical example of a circuit in the sense of the present subgroup can be seen.

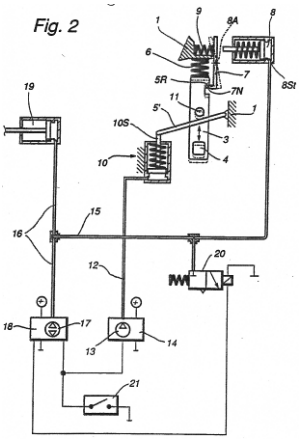

E05B 81/54

Electrical circuits (for locking several wings simultaneously E05B 77/48)

Definition statement

This place covers:

Electric circuit schemes and individual circuit components. The lower subgroups concern a variety of specific control methods, monitoring, sensing and energy supply. This subgroup will consequently contain e.g. electrical circuits not covered by the various lower subgroups.

References

Limiting references

This place does not cover:

Electric circuits for controlling plurality of locks on different doors	E05B 77/48

E05B 81/56

Control of actuators

Definition statement

This place covers:

Various ways of controlling the way in which an actuator works. The most common control methods can be found in the respective lower subgroup. This means, that this subgroup will for example contain electrical circuits in cases which are not covered by one of the specific lower subgroups. An example

of such a circuit is given in the figure, whereby an electrical control circuit (6) is provided in order to control the power input to the motor connectors (9,10).

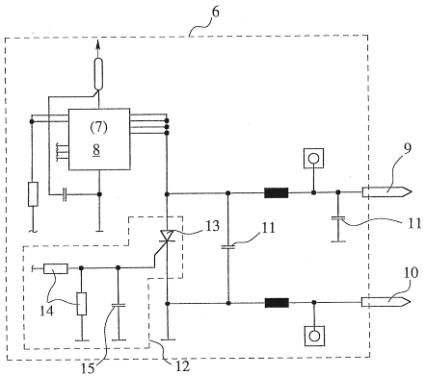

E05B 81/58

including time control, e.g. for controlling run-time of electric motors

Definition statement

This place covers:

The use of time data for the control of actuators. In the example of the figure, a switch indicates when 50% of the actuator stroke has been completed. The time needed for this first half of the stroke is measured and used in order to calculate how much run-time will be needed for achieving the second half of the stroke.

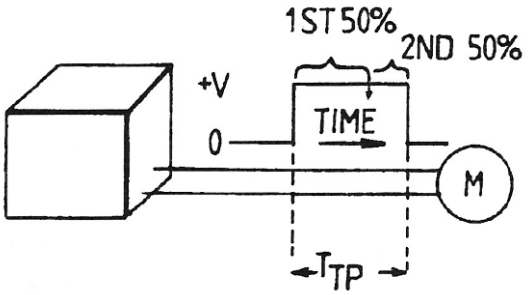

E05B 81/60

using pulse control, e.g. pulse-width modulation

Definition statement

This place covers:

Control of actuators by pulses e.g. of varying length and frequency. One way of providing such control is shown in the figure, whereby the pulse-width for operating the actuator to release the detent (4)

from the bolt (1) is different from the pulse-width used for bringing the detent (4) back to the initial position.

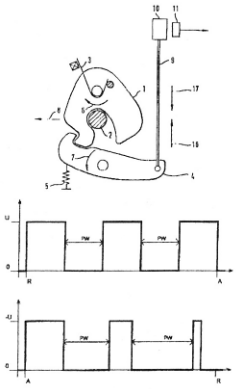

E05B 81/62

for opening or closing of a circuit depending on electrical parameters, e.g. increase of motor current

Definition statement

This place covers:

The use of electrical parameters for actuator control. A typical example of such a controlling method is to detect an increase of the current when an end position is reached, as exemplified by the figure wherein a current increase (124) is detected for stopping the movement of an actuator in one direction and a subsequent current increase (134) causes the stopping of the movement in the opposite direction.

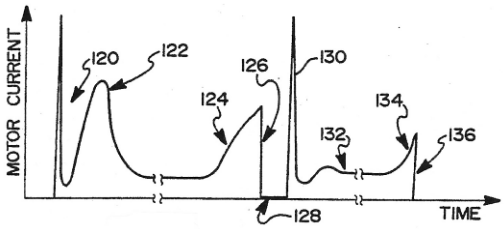

E05B 81/64

Monitoring or sensing, e.g. by using switches or sensors

Definition statement

This place covers:

Detection of lock states or user input by sensing/monitoring positions of various lock elements.

E05B 81/66

the bolt position, i.e. the latching status

Definition statement

This place covers:

Monitoring of the lock status by sensing the bolt position. In the exemplifying figure two switches (55,57) are used for indicating the position of the bolt (17.

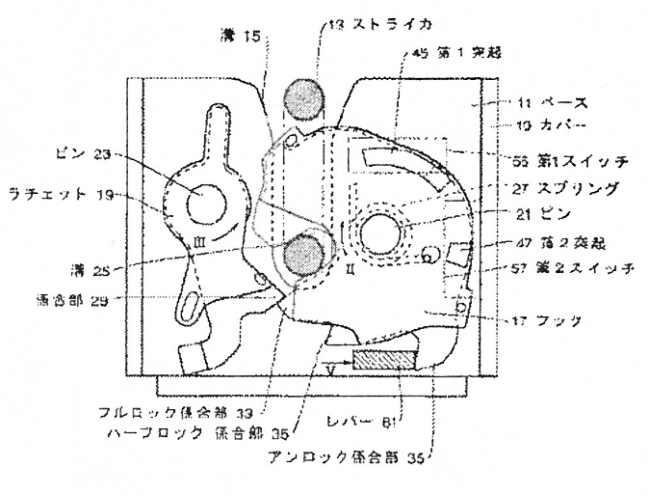

E05B 81/68

by sensing the position of the detent

Definition statement

This place covers:

Control of the lock status by sensing the detent position. In the figure, a sensor (10) detects the position of the bolt as well as the position of the detent.

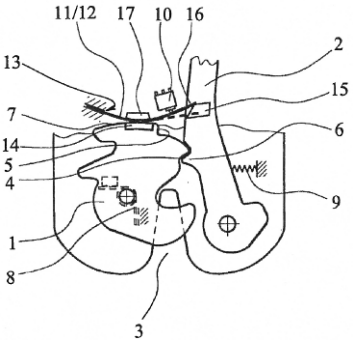

E05B 81/70

the wing position

Definition statement

This place covers:

Indication of the closure status by sensing the door position. It should be noted, that the sensors for door position should be part of the lock or at least related to the function of the lock. An example of a lock monitoring system, which uses the detection of the door position is shown in the figure.

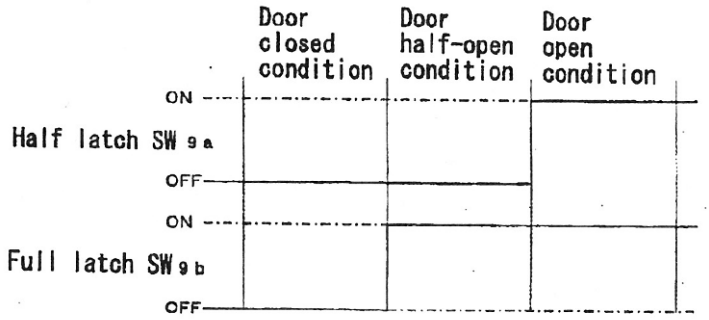

E05B 81/72

the lock status, i.e. locked or unlocked condition

Definition statement

This place covers:

Lock monitoring by sensing a locked/unlocked condition. In the figure, such a monitoring is performed by a switch (7).

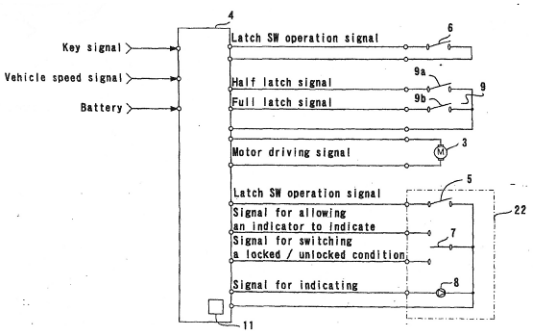

E05B 81/74

by sensing the state of the actuator

Definition statement

This place covers:

A special case of sensing the lock status via the state of the actuator. The figure shows such an arrangement, whereby a protrusion (32) comes into contact either of the two plates (36,38). This

closes an electrical circuit, which indicates the state of the actuator and this is then used for indication of the lock status.

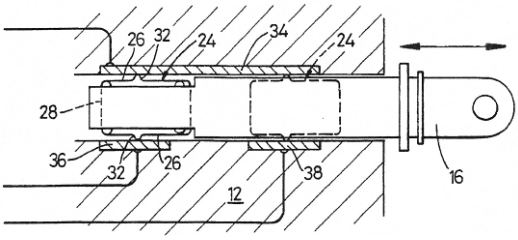

E05B 81/76

Detection of handle operation; Detection of a user approaching a handle; Electrical switching actions performed by door handles

Definition statement

This place covers:

Handles with some kind of electrical function. It first of all concerns handles working more or less as an electrical switch. The handle does thus not perform any mechanical action on the lock. It is simply a switch for sending a signal (e.g. by closing a circuit) to the lock-electronics.

This subgroup also covers handles, which perform both a mechanical function as well as an electric function.

An example of a switch- type handle is given in the figure. This shows an opening switch for vehicle doors or trunks, which is actuated by pressing the cover element (3) in the direction of the arrow.

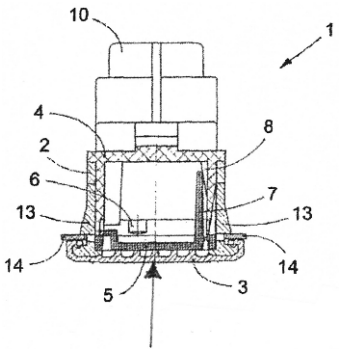

E05B 81/78

as part of a hands-free locking or unlocking operation

Definition statement

This place covers:

Handles used for the initiation of a hands-free opening. A sensor or switch in or near the handle starts the data transfer. This could be done either by moving the handle in a predetermined way or by a proximity sensor, which registers the approach of a hand towards the handle.

It should be noted that this class does not concern the details of the coded data transmission between the lock and a transponder key.

According to the example in the figure, two switches (28,29) can be sensed/actuated by different actions of a user´s hand for example in order initiate a hands-free opening process.

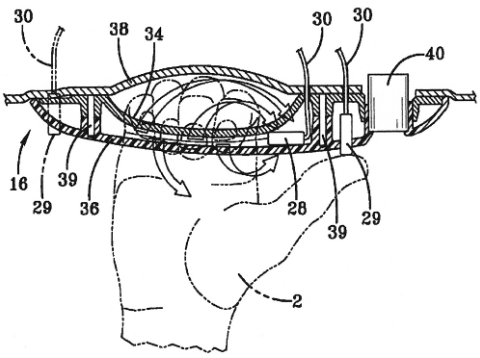

E05B 81/80

characterised by the power supply; Emergency power operation

Definition statement

This place covers:

Various kinds of energy sources (other than the vehicle main battery) and spare-power devices.

If the main power source is defect (for example because the main battery of the vehicle is empty), then these power sources can provide a small amount of power for an emergency opening of the vehicle. This section also covers cases where the primary energy source is not the vehicle main battery. This would for example sometimes be the case for certain types of battery charged locks.

E05B 81/82

using batteries other than the vehicle main battery

Definition statement

This place covers:

Additional batteries or back up batteries used for example in case of failure of energy supply from vehicle main battery.

E05B 81/84

using manually operated generator means

Definition statement

This place covers:

Generators operated by the vehicle user. Such generators can be adapted for supply of energy for example by handle movement, opening/closing of the door or introduction of the key into the keyhole.

The figure shows a generator (22), which supplies energy for the operation of the actuator (17) when the voltage of the main battery is below a certain level.

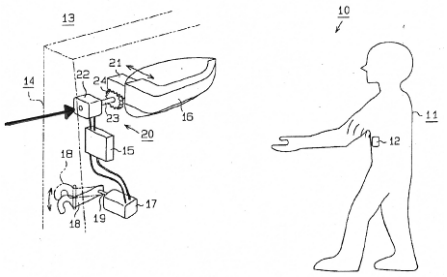

E05B 81/86

using capacitors

Definition statement

This place covers:

The use of capacitors for provision of energy for example when the main battery has been discharged. The figure shows a number of supercapacitors (30) which are available as a back-up energy source. A diode (32) or similar component prevents discharge of the supercapacitors (30) into the main power supply means.

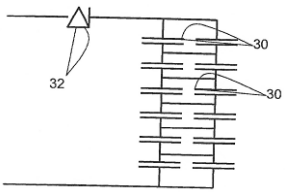

E05B 81/88

using inductive energy transmission

Definition statement

This place covers:

The use of induction for provision of energy. This can be used in situations when it is desired to avoid cables and contacts. One example of this type of arrangement is the provision of a coil in the key another coil in the lock for non-contact supply of emergency power to the lock.

E05B 81/90

Manual override in case of power failure

Definition statement

This place covers:

Purely mechanical manual override means. One example would be a door handle, which in normal use electrically activates an actuator. In case of a power failure this handle can be actuated further or in another direction in order to actuate the lock mechanically.

This subgroup also covers cylinder locks in normally not visible, concealed positions. In the figure, a cylinder lock (9) is for example mounted behind the rear-view mirror (1).

It is to be noted, that this subgroup does not cover normally visible, non concealed cylinder locks mounted in or near the door handle.

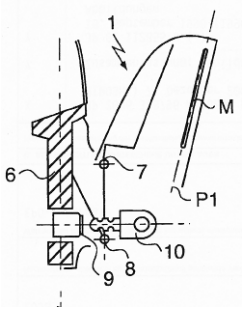

E05B 83/00

Vehicle locks specially adapted for particular types of wing or vehicle (locks specially adapted for bicycles E05B 71/00; locking arrangements for non-fixed vehicle roofs B60J 7/185; latching means for sideboards or tailgates of open load compartments B62D 33/037)

References

Limiting references

This place does not cover:

Locking arrangements for non-fixed roofs	B60J 7/185
Latching means for sideboards or tailgates of open load compartments	B62D 33/037

E05B 83/02

Locks for railway freight-cars, freight containers or the like; Locks for the cargo compartments of commercial lorries, trucks or vans

Definition statement

This place covers:

Locks for commercially used vehicles.

One specific subject, covered by this and the lower subgroups, is locks for (standardized) freight containers for use on trucks and trains, but also on ships or in aircrafts.

This subgroup consequently covers locks both for load compartments that form an integral part of the vehicle as well as freight containers forming a removable part which can be separated from the vehicle.

The figure shows a lockable structure applied to a container (1). In the locked position three bars (7, 8, 9) form a cross-bar construction preventing the doors (4, 5) of the container (1) to be opened.

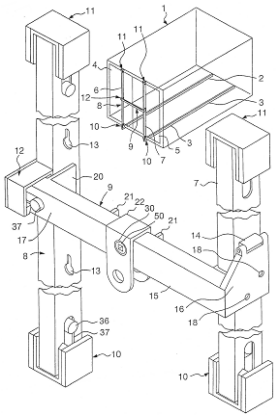

E05B 83/04

for sliding wings

Definition statement

This place covers:

Locks for sliding wings on commercially used vehicles. The figure shows an example of a hook bolt (34) for locking a sliding roll-up door (16).

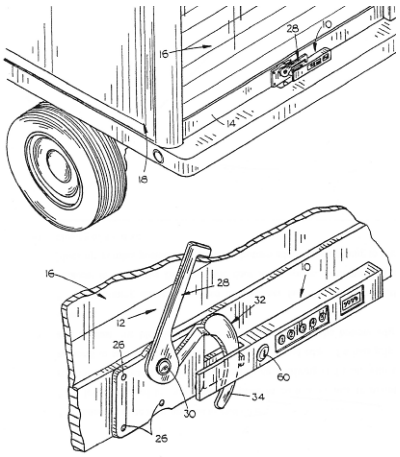

E05B 83/06

of railway freight-cars

Definition statement

This place covers:

Locking arrangements for railway freight cars, as exemplified by the figure where the locking device (20) keeps the sliding door (12) closed.

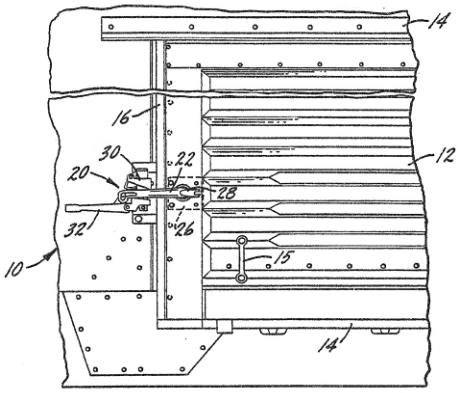

E05B 83/08

with elongated bars for actuating the fastening means

Definition statement

This place covers:

Locking devices with actuation bars which usually connect actuation means, for example a handle, with a fastening means. The figure illustrates this by showing a central actuation unit (10) connected to fastening means (22) by sliding bars (16).

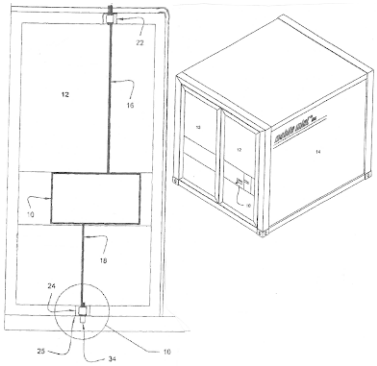

E05B 83/10

Rotary bars

Definition statement

This place covers:

A very common locking arrangement for cargo vehicles with rotary bars connecting for example a handle and lock bolt(s).

In the figure the rotary bars (50a, 50b) are actuated by handles (64a, 64b) in order to move fastening means (66,68) between a locked and unlocked position.

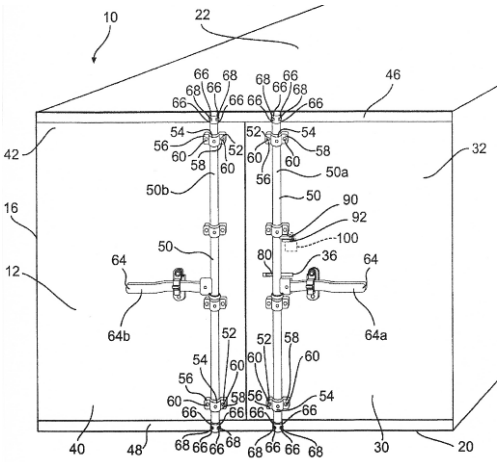

E05B 83/12

for back doors of vans (E05B 83/04, E05B 83/08 take precedence)

Definition statement

This place covers:

Smaller locks for vans (e.g. delivery vans, plumber's van, locksmith's van). These vans usually have doors with locks, which are similar to locks for passenger doors, but quite often adapted to the special requirements needed for the various commercial purposes of the van.

The example of the figure discloses a lock for use on a door between the driver compartment and the cargo compartment.

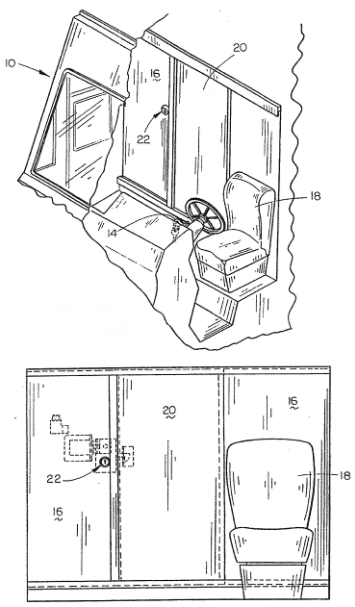

E05B 83/14

with provisions for sealing

Definition statement

This place covers:

Lock devices with means indicating authorized or unauthorized actuation of the lock device.

In the figure, the handle (143) of a hook bolt locking device is sealed by a wire (189) which has to be broken when the handle is to be actuated.

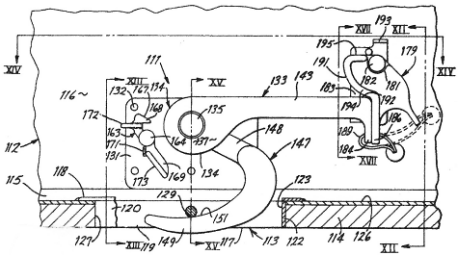

References

Informative references

Attention is drawn to the following places, which may be of interest for search:

Locks giving indication of unauthorised unlocking	E05B 39/00
Security seals	G09F 3/03

E05B 83/16

Locks for luggage compartments, car boot lids or car bonnets

Definition statement

This place covers:

Lock devices for non-passenger compartments essentially located at the outside of the vehicle.

In most of the cases the rear compartments are used for load purposes, e.g. for luggage. This also covers locks for luggage compartments of hatchback/station (family) cars.

At the front of the car it usually concerns a hood for the engine compartment.

E05B 83/18

for car boot lids or rear luggage compartments

Definition statement

This place covers:

Locking arrangements for boot lids and luggage compartments, normally at the back of a car. A typical example of this subgroup is shown in the figure, whereby a lock (10) cooperates with a striker (20) for holding the boot lid (2) closed.

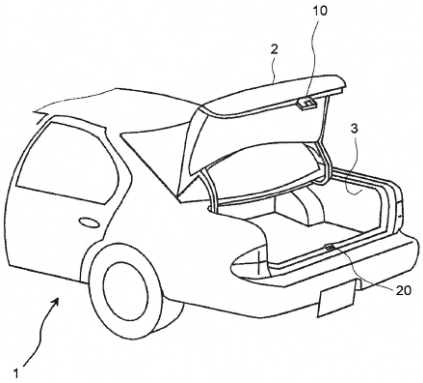

E05B 83/20

with two or more wings, which together close a single compartment

Definition statement

This place covers:

Locking arrangements for luggage compartments with more than one wing. One example of such a lock system is shown in the figure.

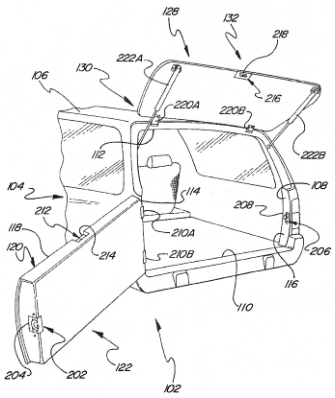

E05B 83/22

for luggage compartments at the side of the vehicle, e.g. of buses or camper vans

Definition statement

This place covers:

Locking arrangements for luggage compartments at the side of the vehicle, as exemplified by the figure, which shows a recreational vehicle with a central actuator (160) for locking and unlocking of several luggage compartment doors at the vehicle side.

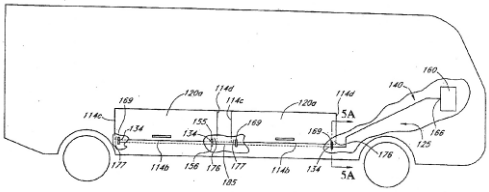

E05B 83/24

for car bonnets

Definition statement

This place covers:

Locks for compartments at the front of a vehicle. These locks are normally provided with a primary and secondary bolt in order to obtain a double security. This assures that the wing stays closed even if the primary bolt fails.

In the figure a striker (4) is held in the latched position by a primary bolt (8). A secondary bolt (5) catches the striker (4), if the primary bolt (8) would fail.

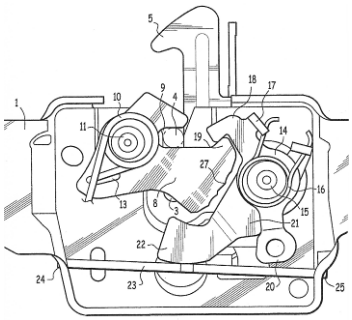

E05B 83/26

Emergency opening means for persons trapped in the luggage compartment

Definition statement

This place covers:

Arrangements for allowing escape from the inside of a boot. There are normally no means for actuating the boot lock from the inside.

This subgroup concerns means allowing operation from the inside in case of emergency. In the figure a handle (12) is provided for emergency opening.

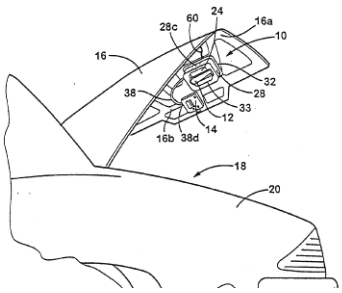

E05B 83/30

for glove compartments

Definition statement

This place covers:

Locks for storage compartments located in the dashboard area in front of the passenger seat. An example of such a device can be seen in the figure.

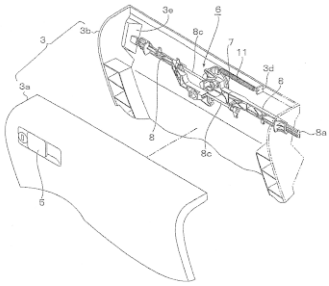

E05B 83/32

for console boxes, e.g. between passenger seats

Definition statement

This place covers:

Locking arrangements for storage compartments normally placed between passenger seats as exemplified by the figure.

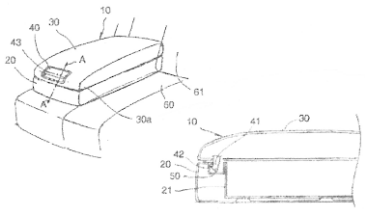

E05B 83/34

for fuel inlet covers essentially flush with the vehicle surface

Definition statement

This place covers:

Locks for fuel inlet covers, which essentially lie in the plane of the vehicle surface, when closed. In the figure a fuel inlet (9) is covered by a lid (4). An actuator (20) drives a bolt (16) between a locked and unlocked position. The caps which actually close the inlet pipe in a fluid-tight way (with or without lock) and the flush cover flaps, per se, are rather covered by B60K 15/04 and B60K 15/05

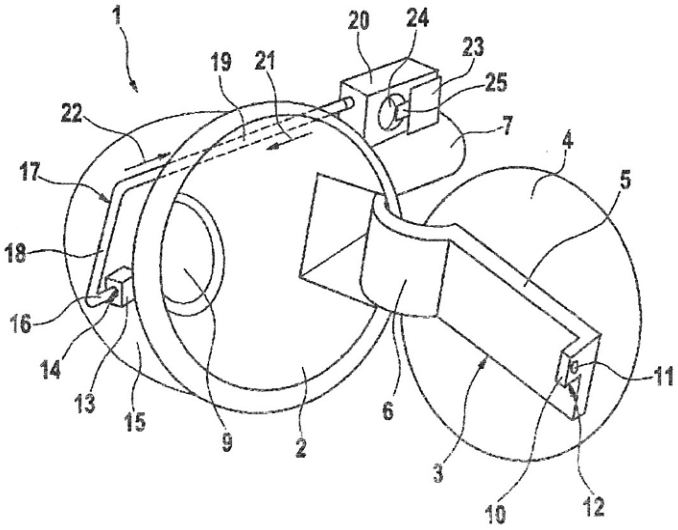

References

Informative references

Attention is drawn to the following places, which may be of interest for search:

Fuel inlet covers, as such	B60K 15/05

E05B 83/38

for pillar-less vehicles, i.e. vehicles where a front and a back door engage each other in the closed position

Definition statement

This place covers:

Locks for door arrangements without a central post between the front and the back door. According to the exemplifying figure a pivoting door (PB) and a sliding door (PC) are kept in a closed position by a system comprising four different locks (DS1, DS2, TS, PS).

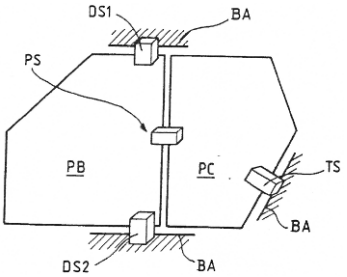

E05B 83/40

for sliding doors

Definition statement

This place covers:

Locking devices for sliding passenger doors. The example in the figure shows a lock system for a sliding door (D). It comprises a rear latch mechanism (11), a front latch mechanism (13) and a lower latch mechanism (17).

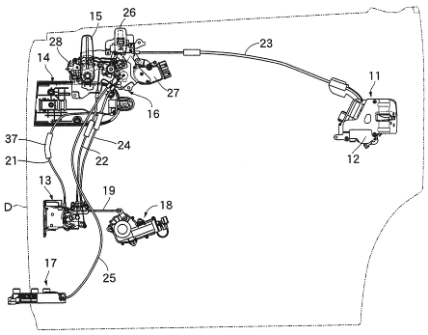

E05B 83/42

for large commercial vehicles, e.g. trucks, construction vehicles or vehicles for mass transport

Definition statement

This place covers:

Locks for passenger compartments of large commercially used vehicles. The figure shows a cabin (1) of a working vehicle. On the inside of the cabin door a handle (24) can be operated for releasing a door lock mechanism (22).

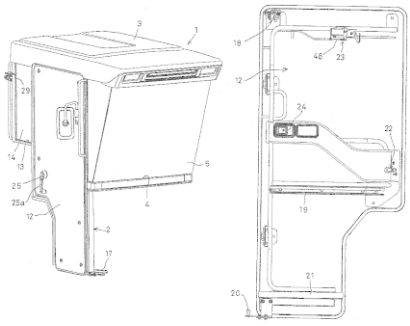

E05B 83/44

for recreational vehicles, e.g. caravans or camper vans

Definition statement

This place covers:

Locks for campers, caravans and similar. One commonly addressed problem is to secure the doors from the inside during night.

The figure is directed to a lock for a caravan, which can be locked and unlocked with a remote control (82).

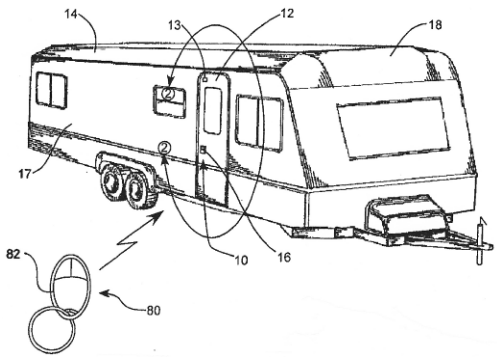

E05B 85/02

Lock casings (mounting of lock casings E05B 79/04)

Definition statement

This place covers:

Housing structures for vehicle locks as exemplified by the figure, which shows a housing (6) composed of a plastic shell (7) and a metallic plate (9).

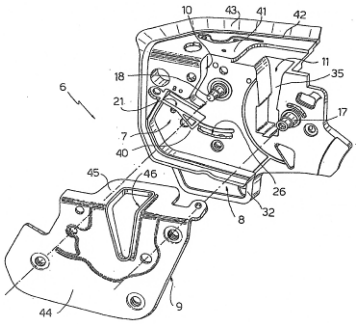

References

Limiting references

This place does not cover:

Mounting of lock casings	E05B 79/04

E05B 85/04

Strikers

Definition statement

This place covers:

Elements cooperating with the bolt for holding a wing closed. These striker elements are also called keepers. They are normally constructed as a pin or a staple for cooperation with a bifurcated latch bolt. A typical example is shown in the figure.

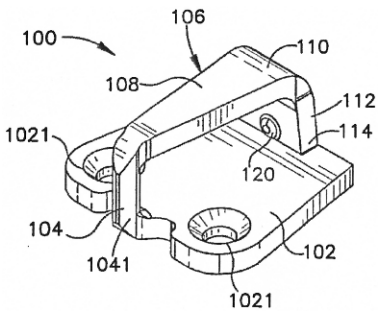

E05B 85/06

Lock cylinder arrangements

Definition statement

This place covers:

Arrangements of lock cylinders in vehicle lock devices. A usual subject of this subgroup is the connection between a lock cylinder and the lock mechanism in a lock housing. Such a construction is disclosed in the figure, wherein a lock cylinder (30) is connected to a lock mechanism (20) by means of a particular rod (4).

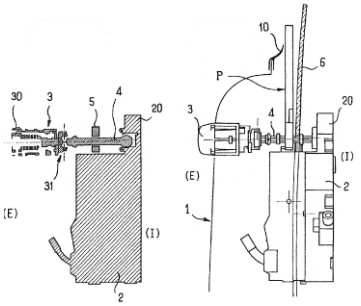

References

Informative references

Attention is drawn to the following places, which may be of interest for search:

Devices for coupling the turning cylinder of a single or double cylinder lock with the bolt-operating member	E05B 17/04

E05B 85/08

Sill-buttons, garnish buttons or inner door lock knobs

Definition statement

This place covers:

Buttons or knobs on the inside of the door for locking/unlocking of the door. It usually concerns either a sill-button placed on the door trim near the window or a knob/button placed near or in the door handle unit. The figure gives an example of a sill/garnish button (11) arranged for actuation of a locking lever (12).

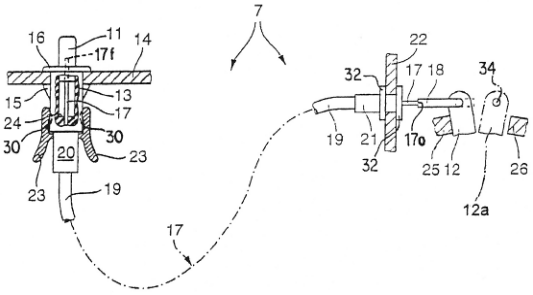

References

Informative references

Attention is drawn to the following places, which may be of interest for search:

Functions related to actuation of locks from the passenger compartment of the vehicle	E05B 77/22

E05B 85/10

Handles

Definition statement

This place covers:

Various types of vehicle door handles for actuation of locks. The lower subgroups concern the most common groups of such handles.

References

Limiting references

This place does not cover:

Mounting of handles	E05B 79/06
Operative connections of handles	E05B 79/22

E05B 85/12

Inner door handles

Definition statement

This place covers:

Handles on the inside of the door as exemplified by the figure, in which a door handle (32) is provided for actuation of the door lock.

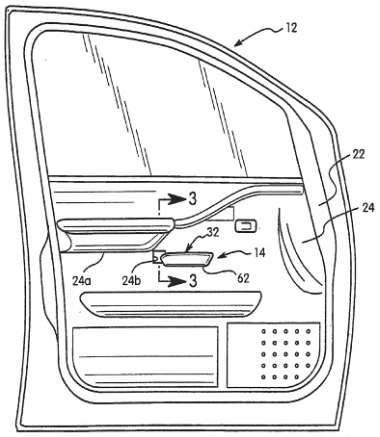

E05B 85/14

Handles pivoted about an axis parallel to the wing

Definition statement

This place covers:

Pivoting handle constructions with an axis essentially parallel to the plane of the wing. This is a very common type of handle movement, and the lower subgroups concern the most usual basic concepts. The example figure of this subgroup therefore discloses another type of such a pivoting handle.

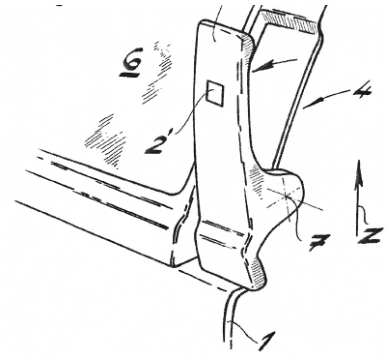

E05B 85/16

a longitudinal grip part being pivoted at one end about an axis perpendicular to the longitudinal axis of the grip part

Definition statement

This place covers:

One of the two most commonly used vehicle handle constructions. The figure illustrates how a longitudinal handle (1) pivots at one end (4) around an axis perpendicular to the longitudinal direction of the handle.

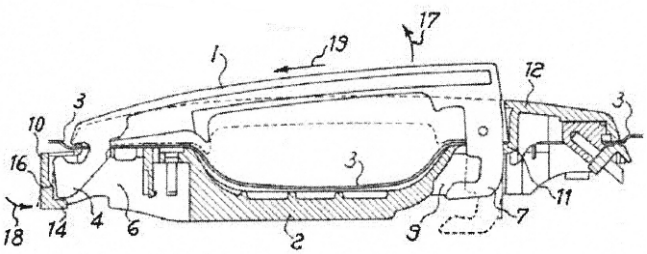

E05B 85/18

a longitudinal grip part being pivoted about an axis parallel to the longitudinal axis of the grip part

Definition statement

This place covers:

The second of the two most commonly used vehicle handle constructions. The figure illustrates how a longitudinal handle (16) pivots around an axis (27) parallel to the longitudinal direction of the handle.

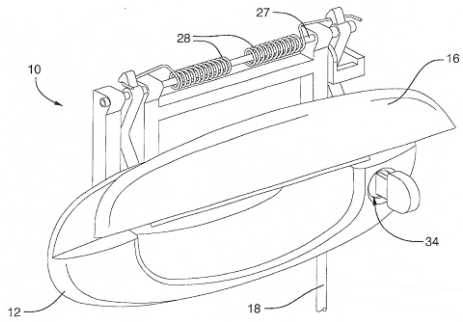

E05B 85/20

Bolts or detents

Definition statement

This place covers:

Details of locking elements in the form of e.g. latch-bolts or dead-bolts and detents for such bolts.
A vehicle front hood lock comprising a bolt (2) with a combined rotational and sliding movement, as illustrated by the figure, would belong in this subgroup.

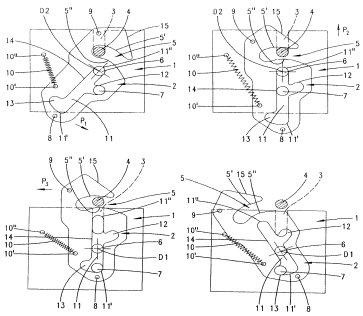

E05B 85/22

Rectilinearly moving bolts

Definition statement

This place covers:

Vehicle locks with sliding bolts as illustrated by the figure, in which an actuator (18) causes a sliding movement of a bolt (22).

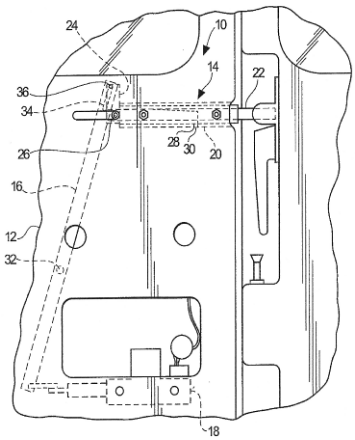

E05B 85/24

Bolts rotating about an axis

Definition statement

This place covers:

Vehicle locks with pivoting bolts. The vast majority of pivoting bolts in vehicle locks is of the bifurcated type. The example of the figure therefore shows a more unusual form of pivoting bolt. The striker (5) is guided onto a centering pin of the lock housing, when the door is closed. A hook element (3) of the bolt (2) will thereby come in contact with an edge (4) of the striker (5). The pivoting bolt (2) is held in the latched position by two detents (6, 10).

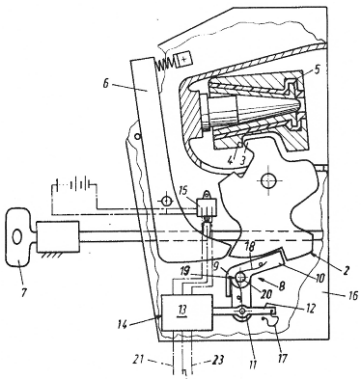

E05B 85/26

Cooperation between bolts and detents

Definition statement

This place covers:

Cases where the detent, the bolt or the way in which they cooperate is described. In the figure a bolt (2) and a detent (3) are provided with contact surfaces with specifically chosen curvatures.

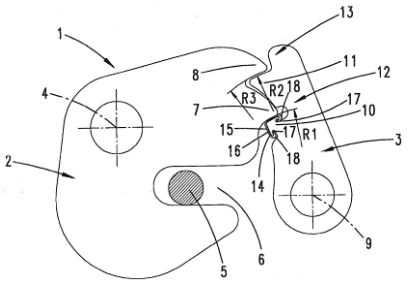

E05B 85/28

in which the member engaging the keeper is shaped as a toothed wheel or the like

Definition statement

This place covers:

Bolt members shaped as toothed wheels. This used to be a very common bolt/striker construction but is rather unusual nowadays.
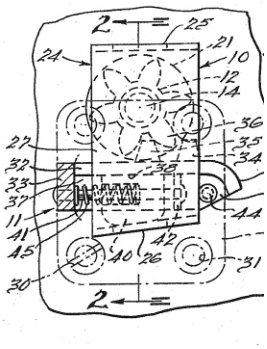
The lock in the figure has a wheel shaped bolt (21) with toothed elements (14) which cooperate with a protrusion (35) on the striker for holding the wing closed.