B65C

LABELLING OR TAGGING MACHINES, APPARATUS, OR PROCESSES (nailing or stapling in general B25C, B27F; applying labels for packaging purposes B65B; labels, name-plates G09F){(series-printing machines B41L; containers for the storage or transport of packages B65D)}

Definition statement

This place covers:

Labelling flat essentially rigid surfaces.

Labelling other than flat surfaces, such as bottles, cables or wire.

Labelling fabrics or comparable materials or articles with deformable surfaces, e.g. paper, fabric rolls, stockings, shoes.

Affixing tags.

Details of labelling machines or apparatus.

Manually-controlled or manually-operable label dispensers, e.g. modified for the application of labels to articles.

References

Informative references

Attention is drawn to the following places, which may be of interest for search:

Apparatus for applying lining or sheathing using tubular layers or sheathings	B29C 63/42 and subgroups.
Making of (adhesive) labels provided on carrier webs	B31D 1/02.
Enclosing successive articles in tubular webs/Devices for distending tubes supplied in the flatened state	B65B 9/14
Adding cards, coupons or other inserts to package contents	B65B 61/20
Handling thin or filamentary material, e.g. webs	B65H
Franking apparatus	G07B 17/00
Franking apparatus attaching a label on a mailpiece:	G07B 2017/0062.
Labels or tags as such	G09F 3/00, G09F 3/00
Apparatus or processes specially adapted for marking conductors or cables	H01B 13/34

Glossary of terms

In this place, the following terms or expressions are used with the meaning indicated:

Label	slip of paper, card, linen, metal, etc., for attaching to object and indicating its nature, owner, name, destination, etc.

Synonyms and Keywords

In patent documents, the following words/expressions are often used with the meaning indicated:

Liner labels (label backing/ carrier)	web/liner/strip/sheet

B65C 1/00

Labelling flat essentially-rigid surfaces (labelling of fabrics B65C 5/00)

Definition statement

This place covers:

Affixing labels to one flat surface of articles.

Affixing labels, e.g. wrap-around labels, to two or more flat surfaces of a polyhedral article, e.g. cigarette package.

References

Informative references

Attention is drawn to the following places, which may be of interest for search:

Franking apparatus	G07B 17/00
Franking apparatus attaching a label on a mailpiece	G07B 2017/0062

B65C 1/02

Affixing labels to one flat surface of articles, e.g. of packages, of flat bands

Definition statement

This place covers:

Applying a (one) label to one flat surface of an article.

Illustrative example of subject matter classified in this group.

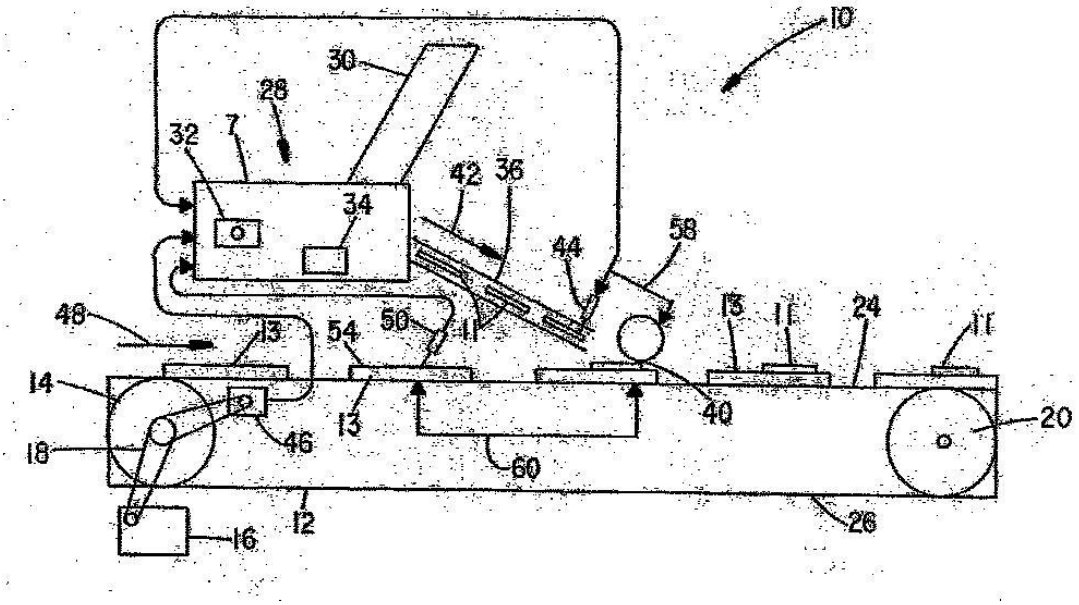

B65C 1/04

Affixing labels, e.g. wrap-around labels, to two or more flat surfaces of a polyhedral article

Definition statement

This place covers:

Applying a (one) label to two or more flat surfaces of a polyhedral article.

Illustrative example of subject matter classified in this group.

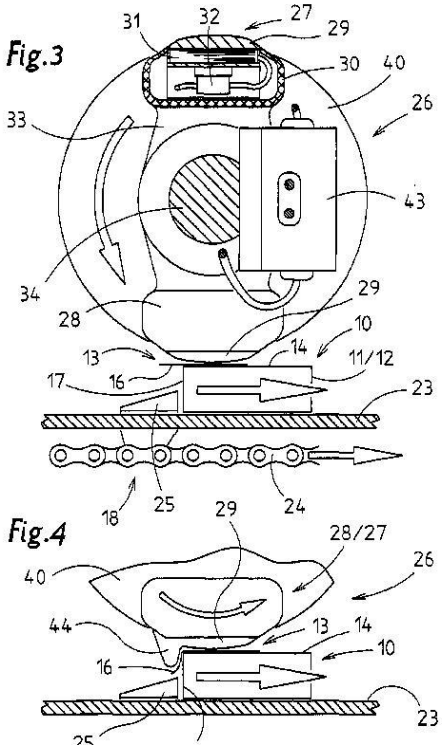

B65C 3/00

Labelling other than flat surfaces (of fabrics B65C 5/00)

Definition statement

This place covers:

Affixing labels to elongated objects, e.g. wires, cables.

Affixing labels to short rigid containers., e.g. bottles.

Affixing labels to non-rigid containers, e.g. bottles made of polyethylene, boxes to be inflated by internal air pressure prior to labelling.

B65C 3/02

Affixing labels to elongated objects, e.g. wires, cables, bars, tubes

Definition statement

This place covers:

Illustrative example of subject matter classified in this group.

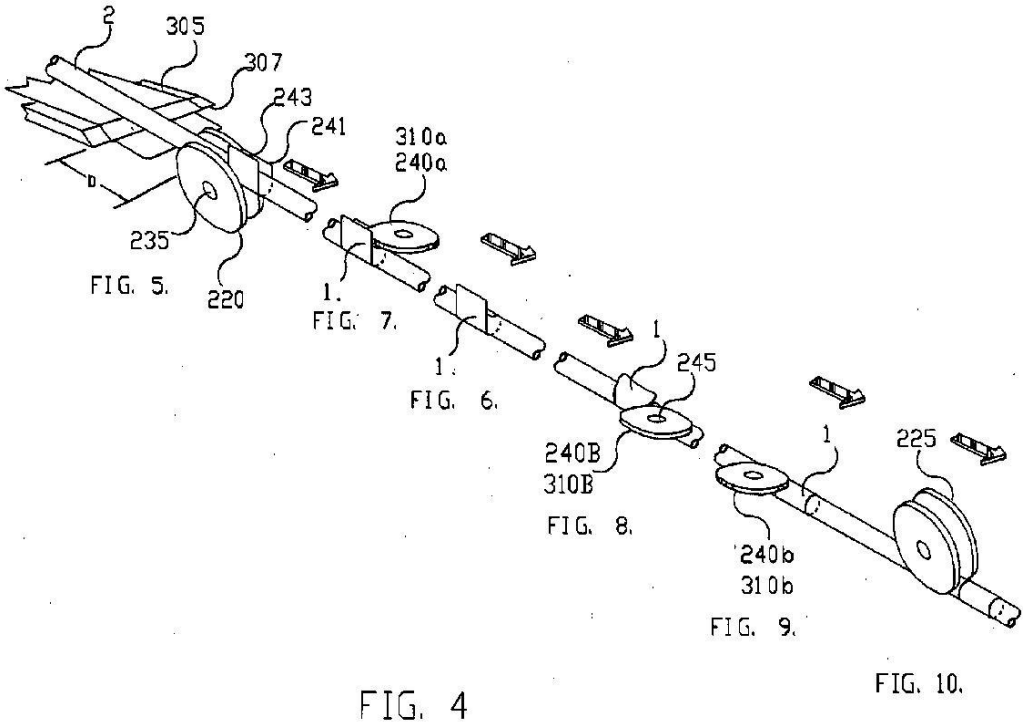

B65C 3/06

Affixing labels to short rigid containers

Definition statement

This place covers:

Applying a (one) label to a rigid container.

Illustrative example of subject matter classified in this group.

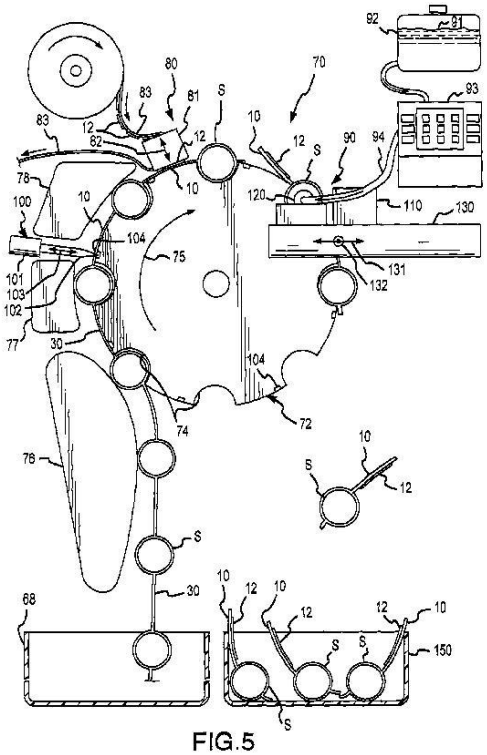

FIG.5

References

Informative references

Attention is drawn to the following places, which may be of interest for search:

Apparatus or processes specially adapted for marking conductors or cables	H01B 13/34

B65C 3/065

{by placing tubular labels around the container (applying preformed tubular sheathings of plastics in general B29C 63/18; applying protective covers to closures B67B 5/03)}

References

Informative references

Attention is drawn to the following places, which may be of interest for search:

Apparatus for applying lining or sheathing using tubular layers or sheathings:	B29C 63/42
Enclosing successive articles in tubular webs/Devices for distending tubes supplied in the flatened state	B65B 9/14

B65C 3/26

Affixing labels to non-rigid containers, e.g. bottles made of polyethylene, boxes to be inflated by internal air pressure prior to labelling

Definition statement

This place covers:

Applying a label to a non-rigid container or box to be inflated by internal pressure prior, and optionally during, the labelling.

Illustrative example of subject matter classified in this group.

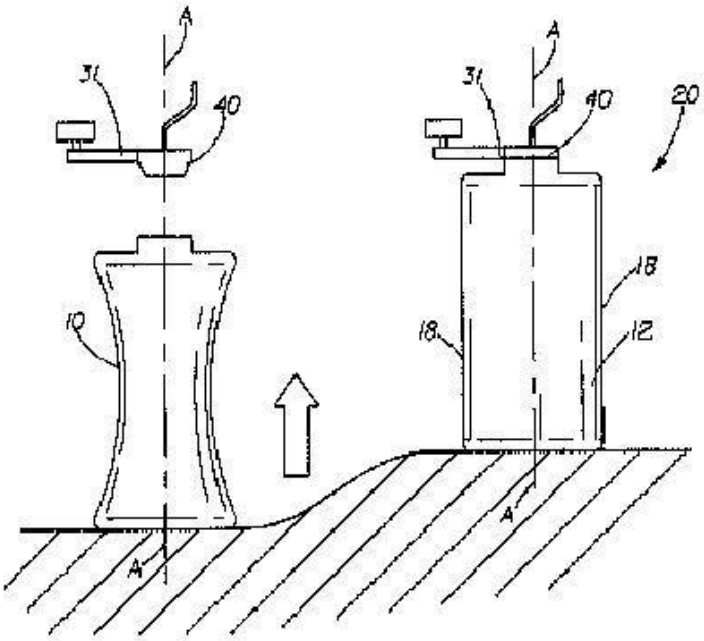

Fig. 5A

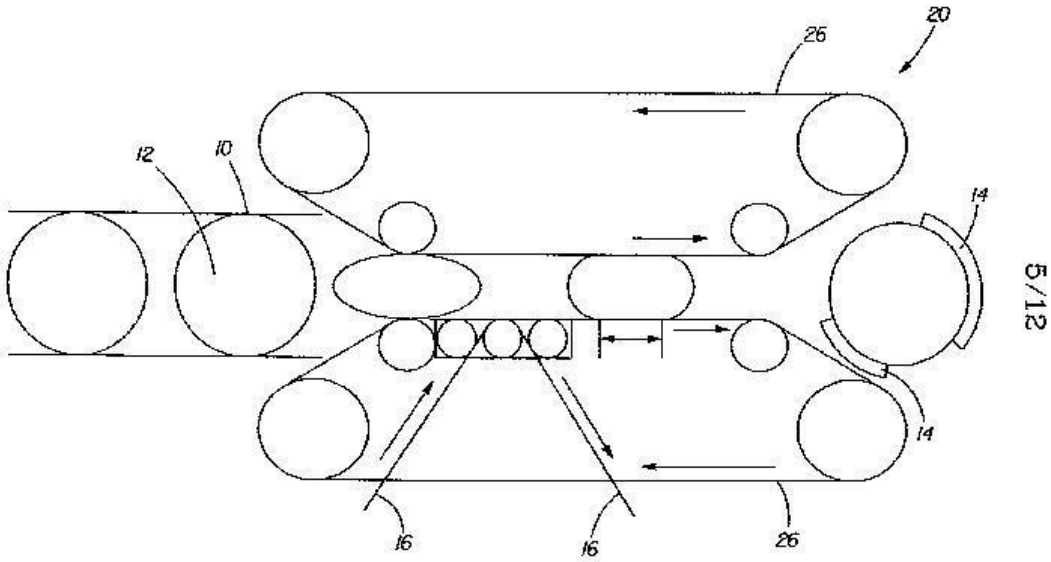

Fig. 4C

B65C 5/00

Labelling fabrics or comparable materials or articles with deformable surface, e.g. paper, fabric rolls, stockings, shoes (affixing labels to non-rigid containers B65C 3/26; by sewing D05B {; applying marks during shoe manufacture A43D 95/14; marking textile materials by attaching tags D06H 1/04})

Definition statement

This place covers:

Using adhesives.

Using staples.

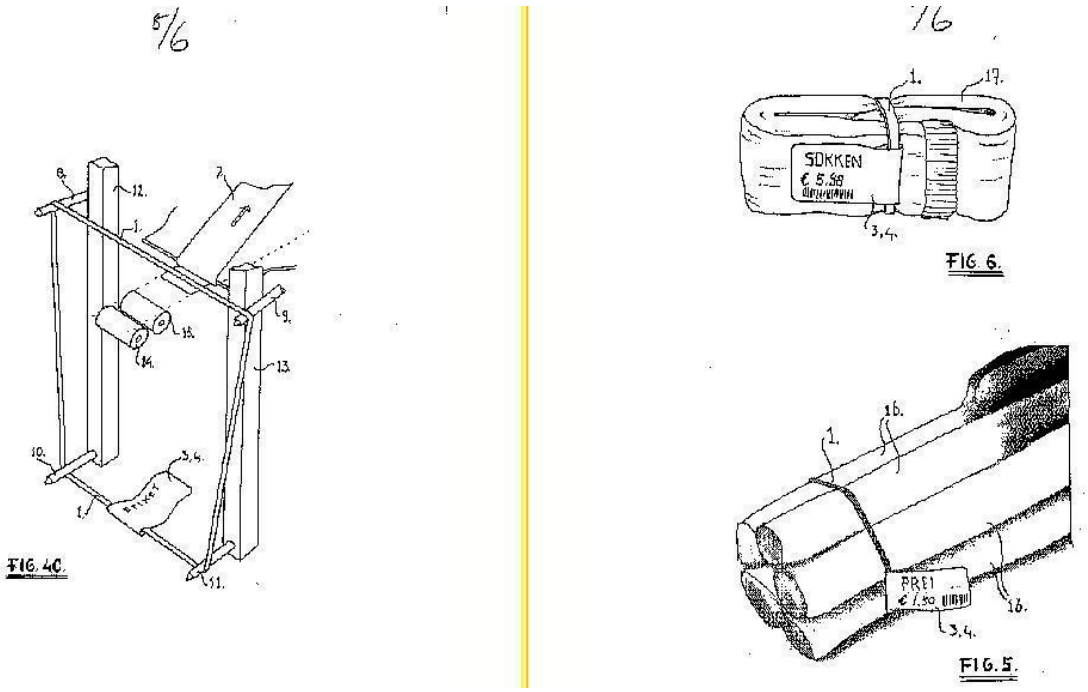

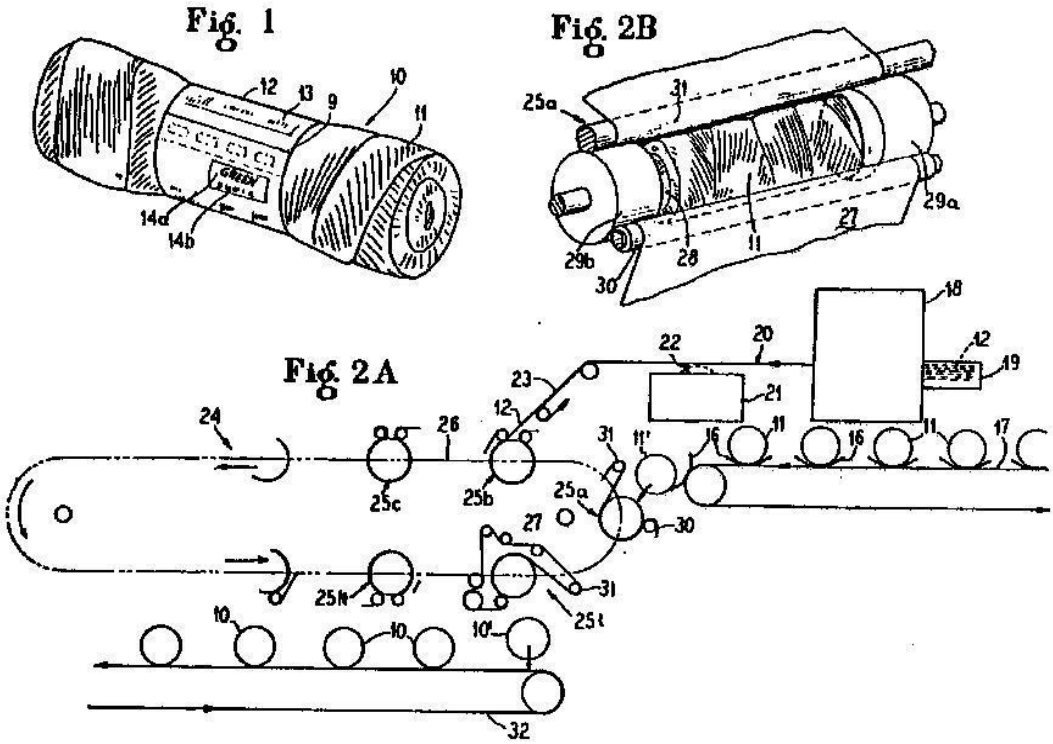

B65C 5/02

using adhesives

Definition statement

This place covers:

Illustrative example of subject matter classified in this group.

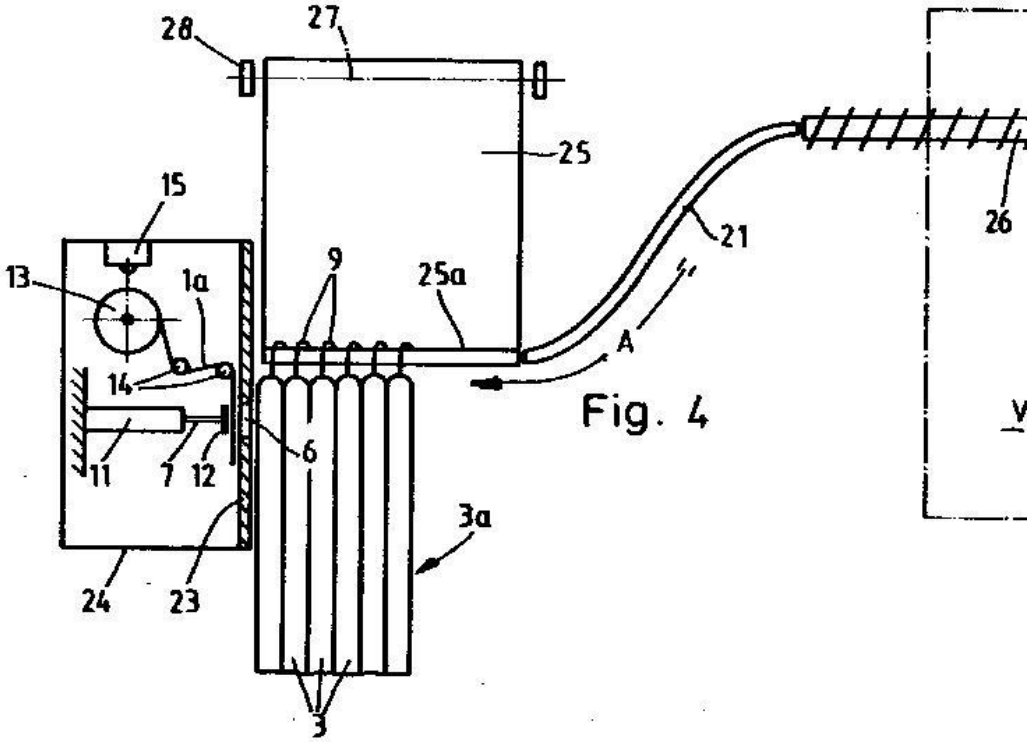

B65C 5/06

using staples {(man-operated portable stapling tools B25C 5/00; permanently attaching together sheets B42B 4/00)}

Definition statement

This place covers:

Illustrative example of subject matter classified in this group.

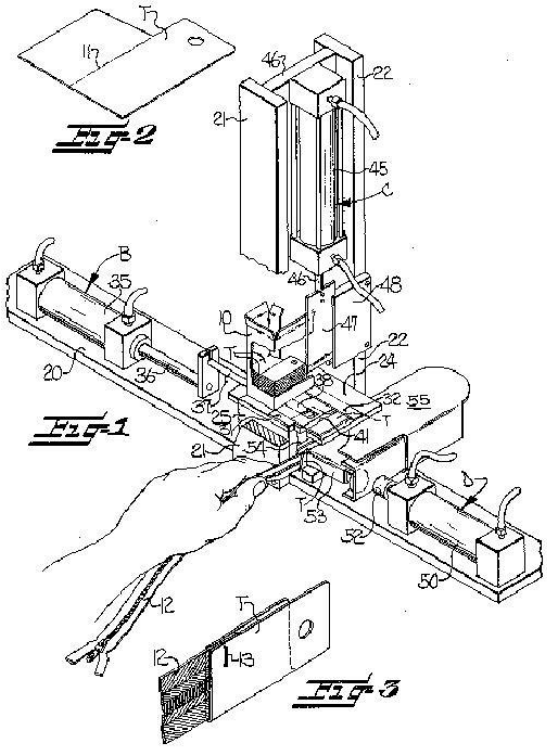

B65C 7/00

Affixing tags (in combination with filling of tea bags B65B 29/04 {; multi-step processes for making labels or tags B31D 1/02})

Definition statement

This place covers:

Using pins having at least one sharp pointed end.

Using paddle-shaped plastic pins.

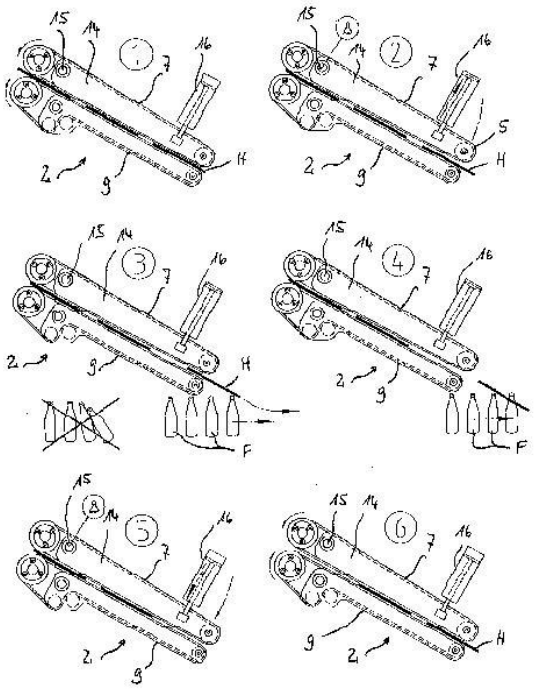

Fig. 3

FIG. 35C

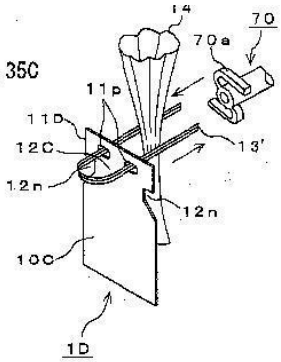

FIG. 35D

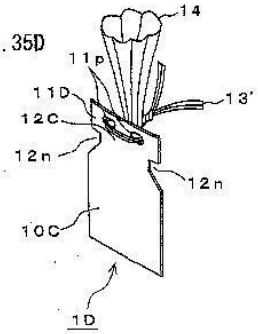

B65C 7/001

{using pins having at least one sharp pointed end}

Definition statement

This place covers:

Illustrative example of subject matter classified in this group.

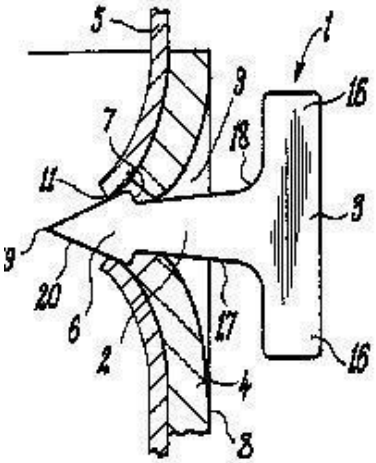

FIG 5

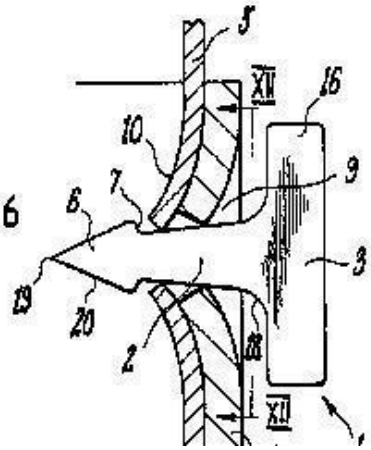

FIG 6

FIG 25

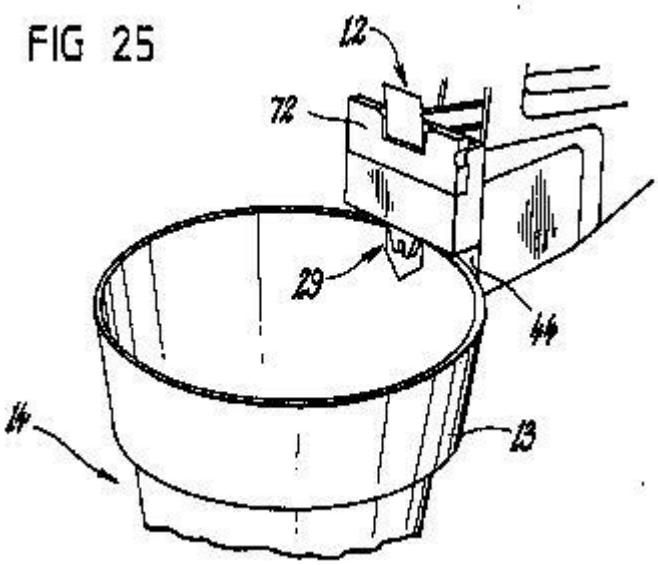

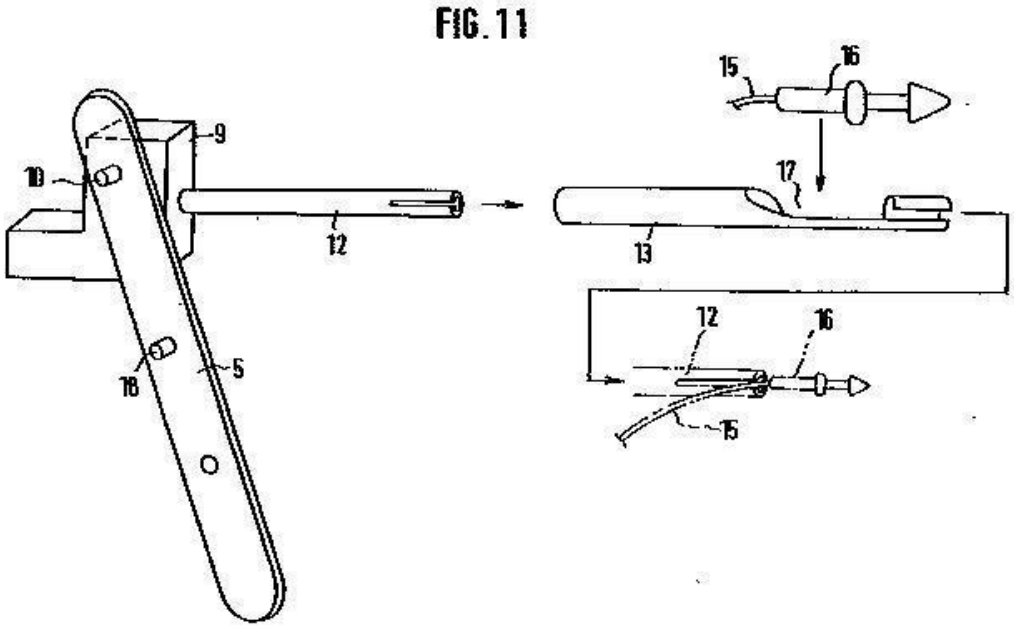

B65C 7/003

{using paddle-shaped plastic pins (using plastic pins for affixing buttons to garments A41H 37/008)}

Definition statement

This place covers:

Using paddle-shaped pins, "plastic" is not an essential limiting feature.

Illustrative example of subject matter classified in this group.

FIG. 9

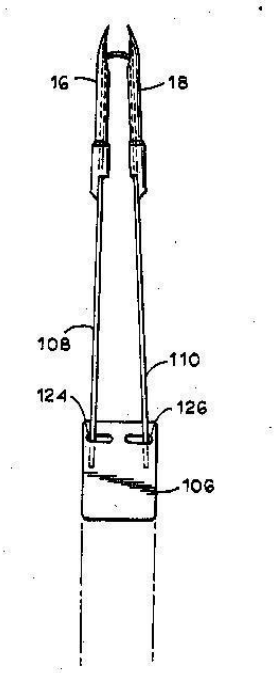

FIG. 10

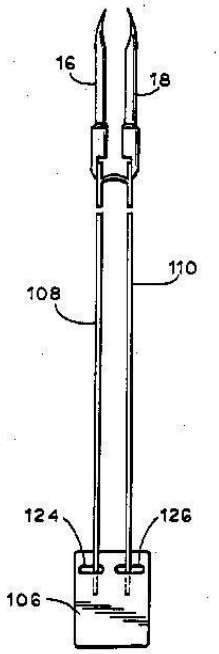

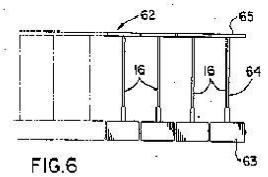

FIG.6

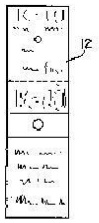

FIG.5

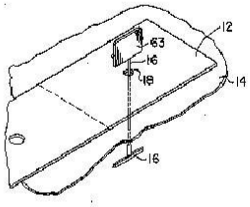

FIG.7

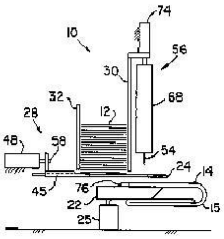

FIG.8

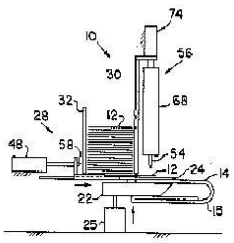

FIG.9

B65C 9/00

Details of labelling machines or apparatus {(attaching articles to carriers B65B 15/00; cards of samples G09F 5/04)}

Definition statement

This place covers:

Removing backing sheets.

Preparing the labels or articles, e.g. smoothing, removing air bubbles.

Interchangeable modules of a labelling machine, e.g. different label type or

size dispenser modules. Cutting tubular labels from a web.

Devices for moving articles, e.g. containers, past a labelling station.

Devices for presenting articles in predetermined attitude or position at a labelling station.

Label feeding Gluing the labels or articles.

Devices for applying labels.

Label cooling or drying.

Controls; Safety devices.

Applying date marks, code marks, or the like, to the label during labelling.

B65C 9/0006

{Removing backing sheets}

Definition statement

This place covers:

Illustrative example of subject matter classified in this group.

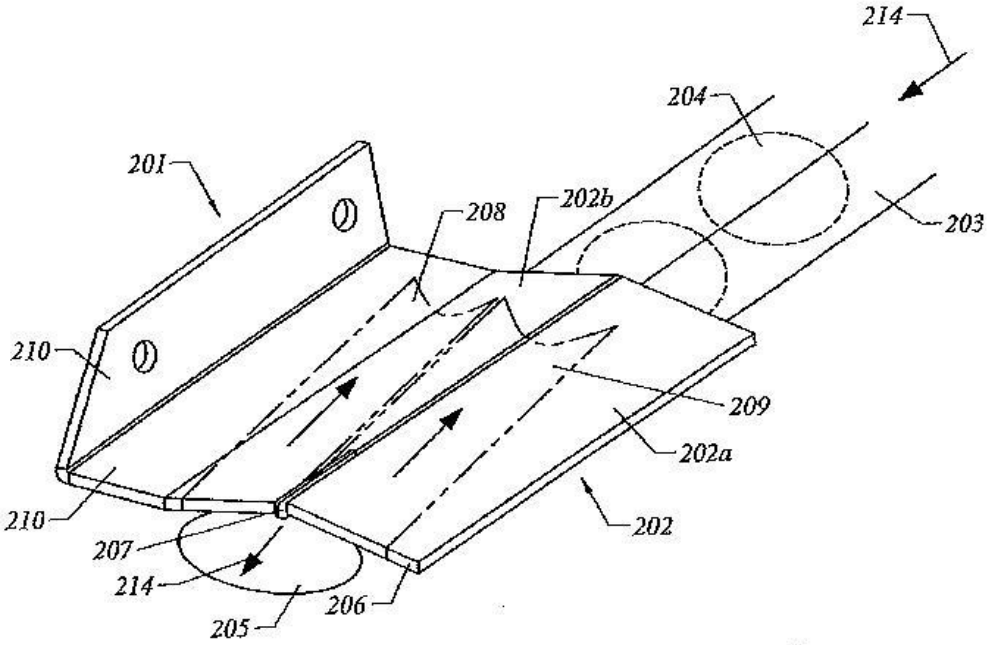

FIG. 3

B65C 9/0015

{Preparing the labels or articles, e.g. smoothing, removing air bubbles}

Definition statement

This place covers:

Preparing the labels or the articles before or during the application of the label to the article, e.g. drying articles, preheating, electrostatic (de-)charging, stretching of labels, etc.

Illustrative example of subject matter classified in this group:

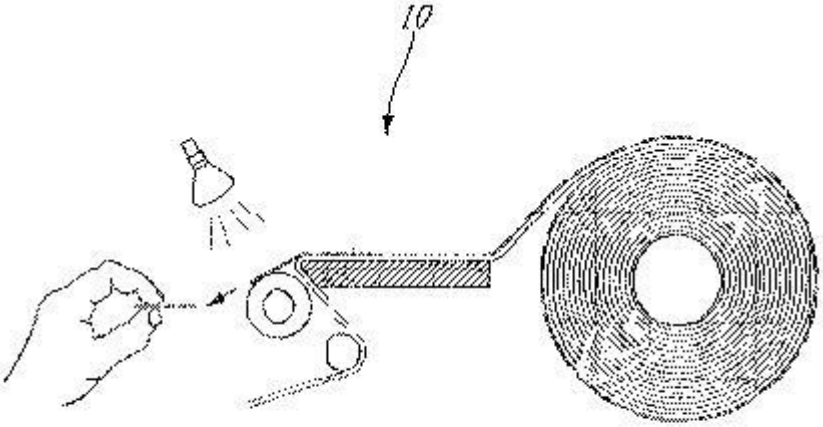

Fig. 1

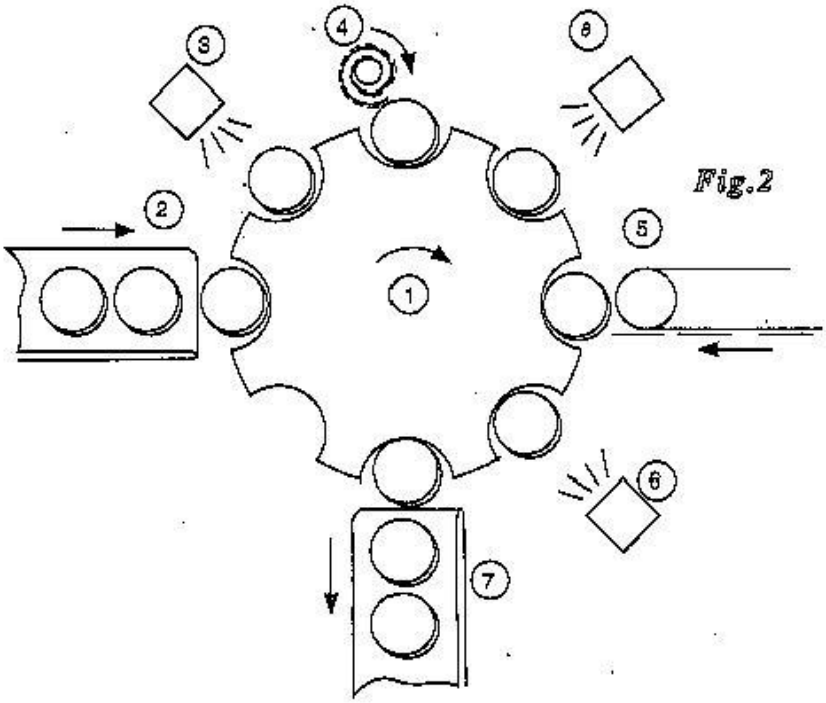

Fig. 2

B65C 9/0062

{Interchangeable modules, e.g. applicator heads with label magazines and glue rollers}

Definition statement

This place covers:

Illustrative example of subject matter classified in this group.

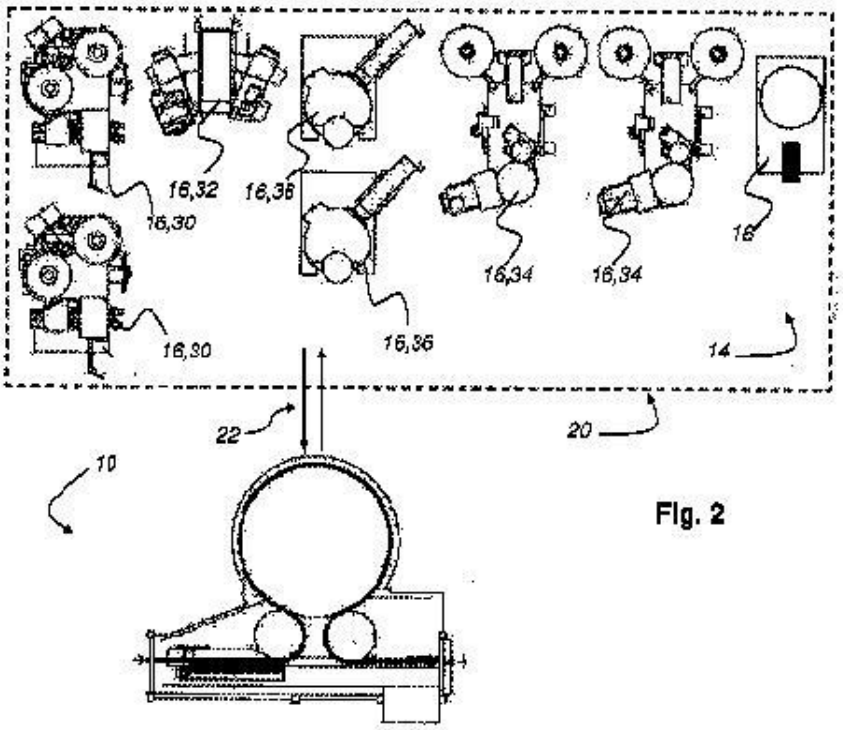

Fig. 2

B65C 9/0065

{Cutting tubular labels from a web}

Definition statement

This place covers:

Illustrative example of subject matter classified in this group.

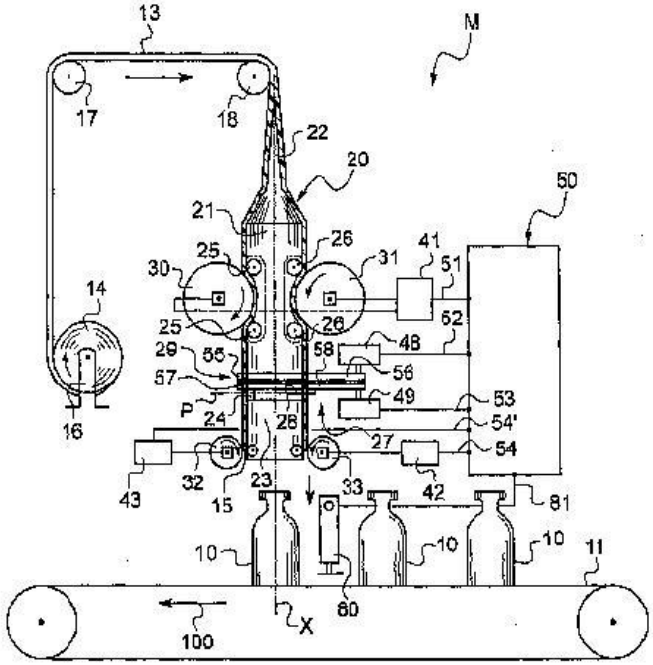

Fig.1

B65C 9/02

Devices for moving articles, e.g. containers, past labelling station

Definition statement

This place covers:

Illustrative example of subject matter classified in this group.

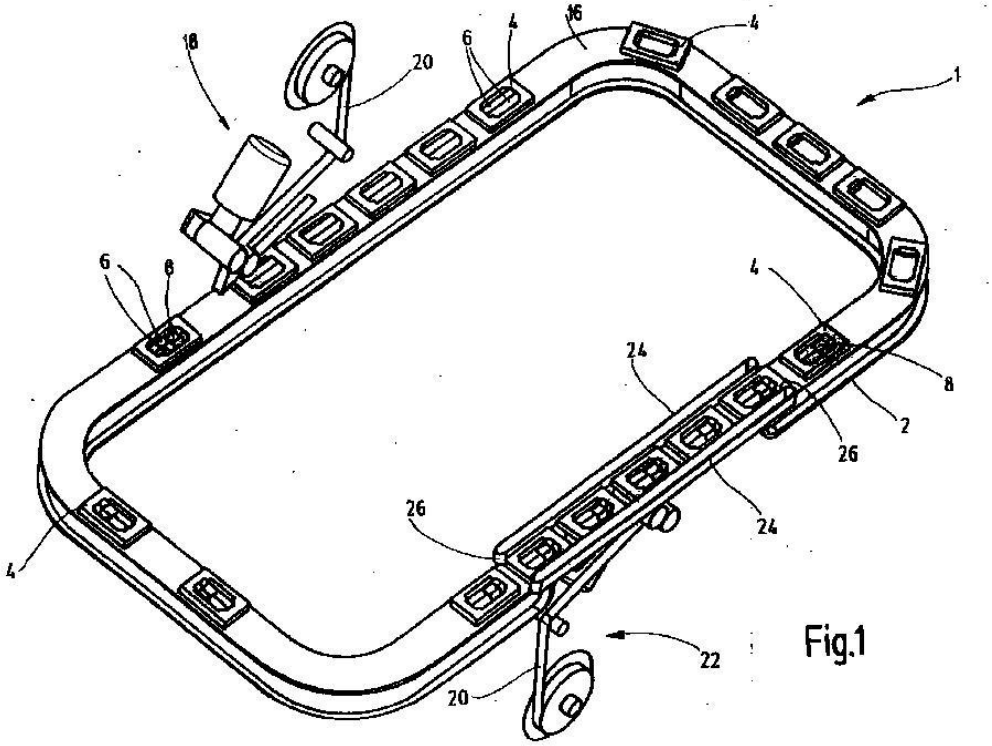

Fig.1

B65C 9/04

having means for rotating the articles

Definition statement

This place covers:

Having means for rotating the articles themselves, i.e. spinning, independently from their conveying direction, i.e. being on a linear conveyor or on a rotating carousel, during the label application.

Illustrative example of subject matter classified in this group.

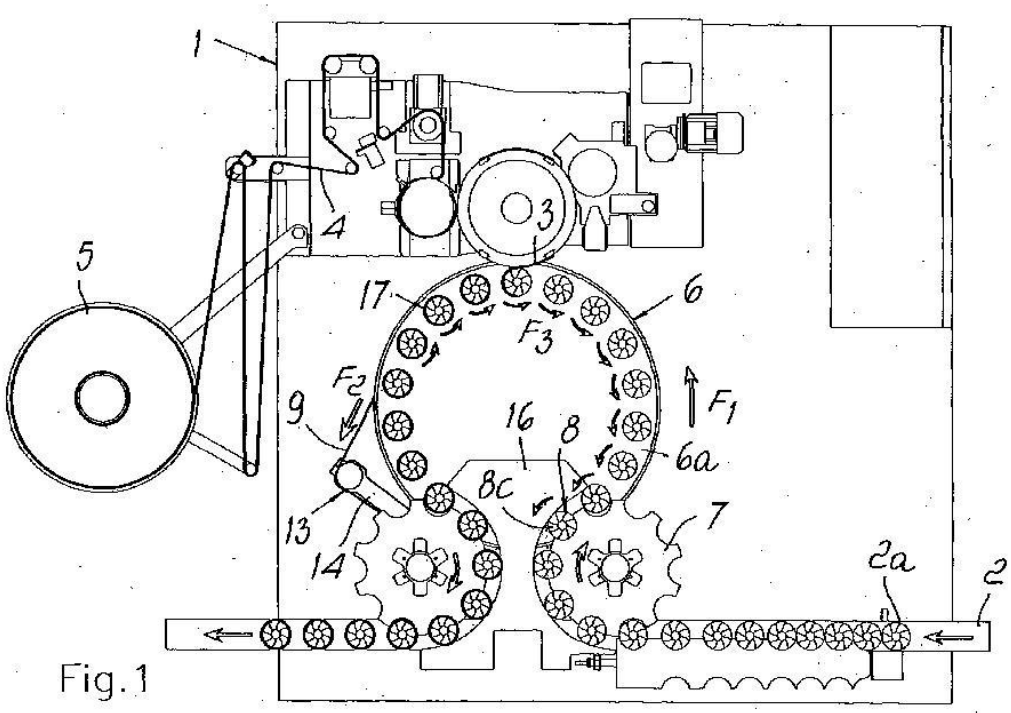

Fig.1

B65C 9/06

Devices for presenting articles in predetermined attitude or position at labelling station

Definition statement

This place covers:

Devices for positioning articles prior to label application, for example rotating the articles around their own axis prior to label application, or height adjustment of article support means according to article size.

B65C 9/062

{for orienting bottles having swing stoppers, i.e. by means responsive to the position of the swing stoppers}

Definition statement

This place covers:

Illustrative example of subject matter classified in this group.

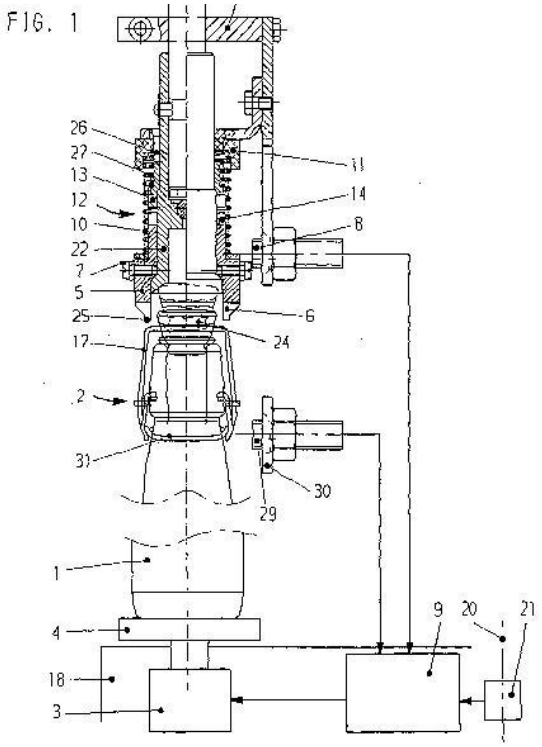

B65C 9/065

{for orienting articles having irregularities in their shape, the irregularities being detected by mechanical means}

Definition statement

This place covers:

Illustrative example of subject matter classified in this group.

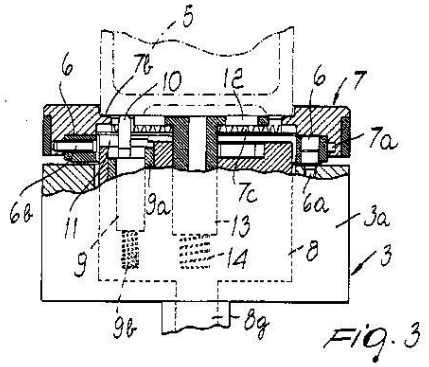

Fig. 3

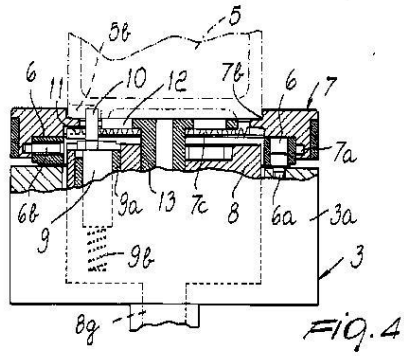

Fig. 4

B65C 9/067

{for orienting articles having irregularities, e.g. holes, spots or markings, e.g. labels or imprints, the irregularities or markings being detected}

Definition statement

This place covers:

Illustrative example of subject matter classified in this group.

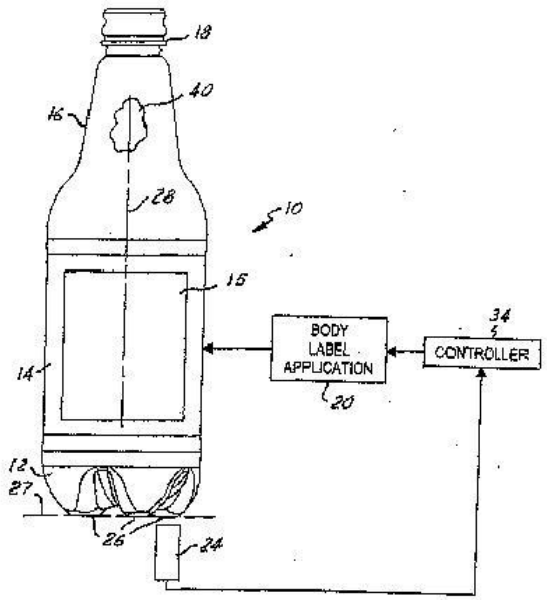

FIG. 3

B65C 9/08

Label feeding

Definition statement

This place covers:

This group comprises the following subgroups:

Label magazines

Removing separate labels from stacks

Label feeding from strips

B65C 9/10

Label magazines

Definition statement

This place covers:

Illustrative example of subject matter classified in this group.

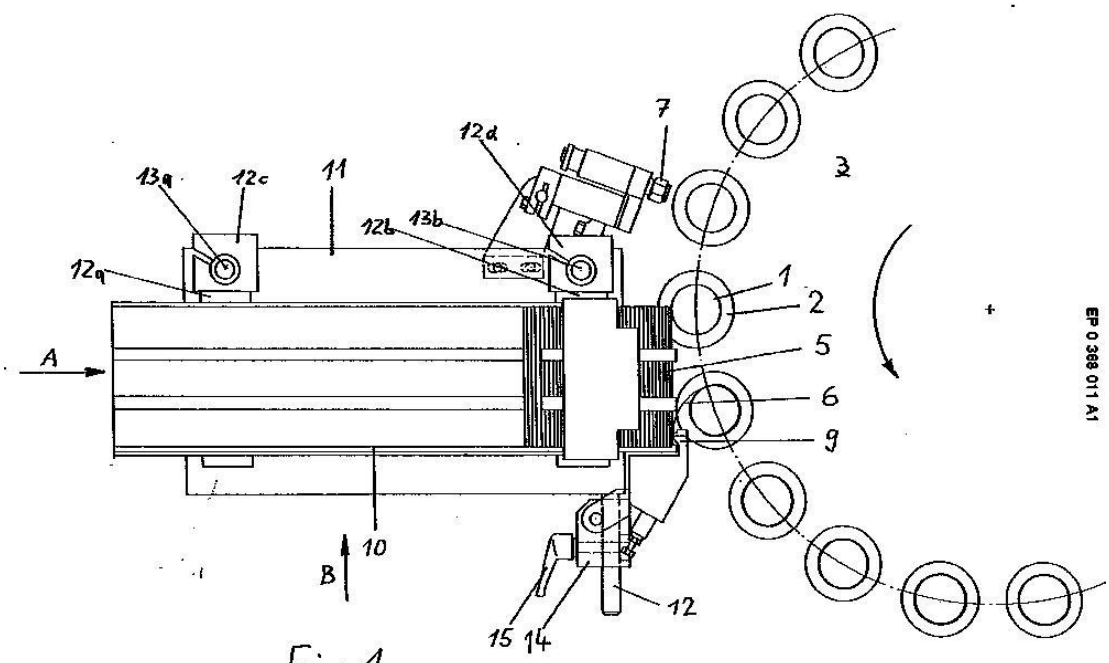

Fig. 1

B65C 9/12

Removing separate labels from stacks (for printing B41F; separating articles from piles in general B65H) ({multi-step processes for making labels or tags B31D 1/02}; for printing B41F)

Definition statement

This place covers:

Illustrative example of subject matter classified in this group.

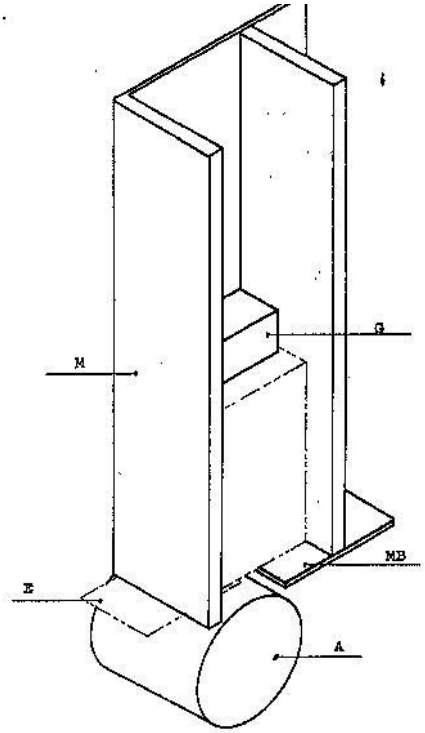

B65C 9/18

Label feeding from strips, e.g. from rolls

Definition statement

This place covers:

The labels being cut from a strip.

The labels adhering on a backing strip.

Spools or cassettes for strips.

The labels being torn or burst from a strip.

Illustrative example of subject matter classified in this group.

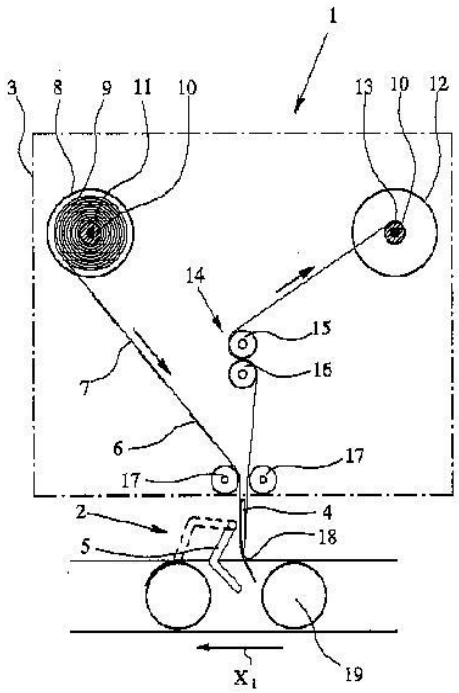

Fig. 1

B65C 9/20

Gluing the labels or articles

Definition statement

This place covers:

By wetting, e.g. by applying liquid glue or a liquid to a dry glue coating

- using spraying means
- using manipulator arms
- Applying the liquid on the label
- using liquid rollers or bands
- using wipers, pallets, or segments

By heat

- by thermo-activating the glue

Illustrative example of subject matter classified in this group.

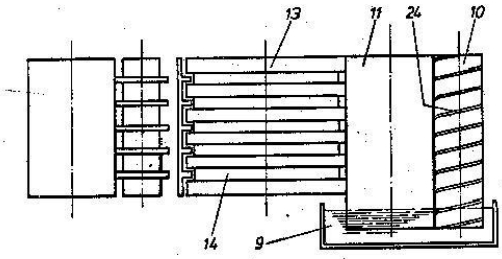

Fig. 1

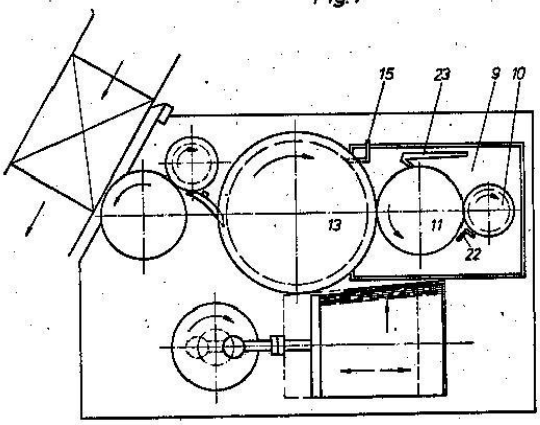

Fig. 2

B65C 9/26

Devices for applying labels

Definition statement

This place covers:

Specific devices for applying labels to articles in general, not necessarily restricted to a specific surfaces, and for which is normally no other entry.

This group comprises the following subgroups:

- Manually operable
- Air blast devices
- Rollers
- Flexible bands
- Wipers, Pressers

Illustrative example of subject matter classified in this group.

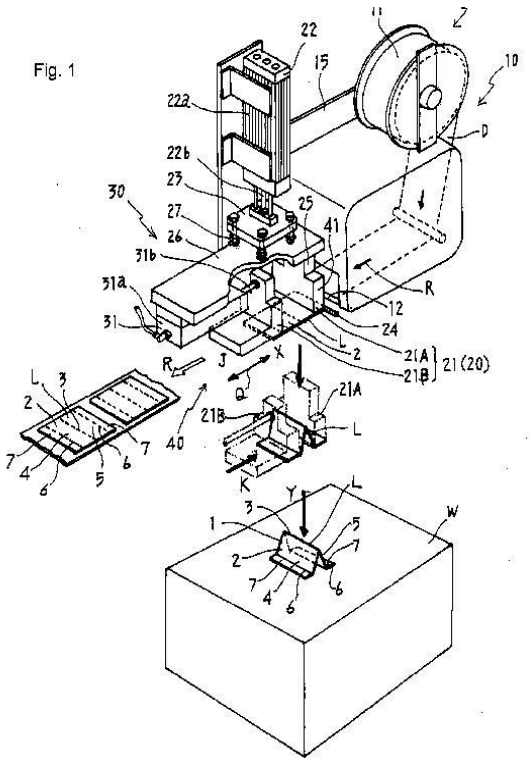

B65C 9/262

{manually operable}

Definition statement

This place covers:

Illustrative example of subject matter classified in this group.

FIG. 7

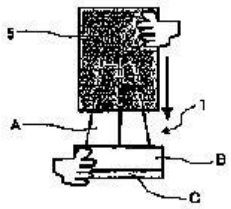

FIG. 8

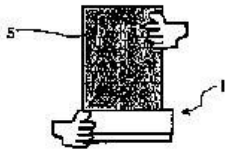

FIG. 9

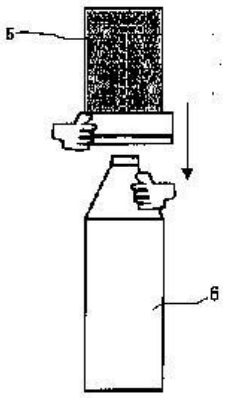

B65C 9/28

Air-blast devices

Definition statement

This place covers:

Illustrative example of subject matter classified in this group.

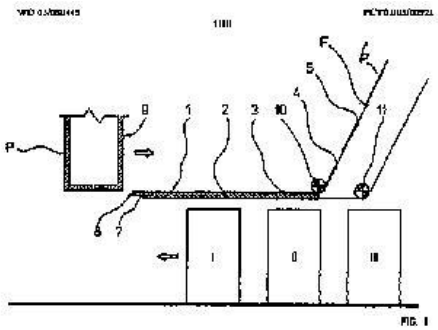

FIG. 1

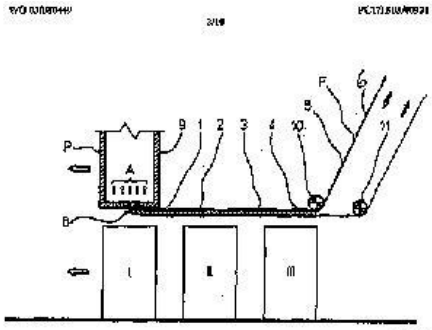

FIG. 3

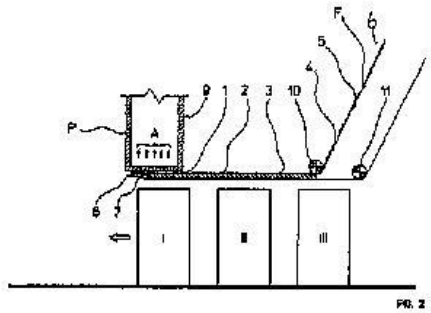

FIG. 2

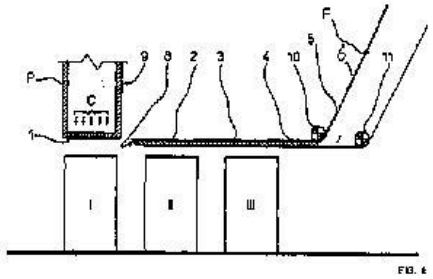

FIG. 4

B65C 9/30

Rollers

Definition statement

This place covers:

Illustrative example of subject matter classified in this group.

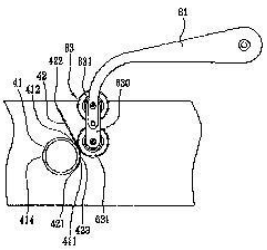

FIG. 7a

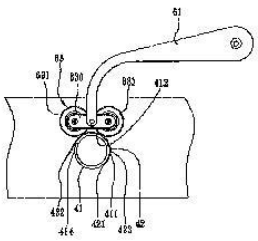

FIG. 7b

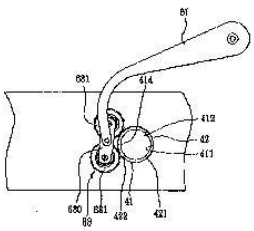

FIG. 7c

B65C 9/34

Flexible bands

Definition statement

This place covers:

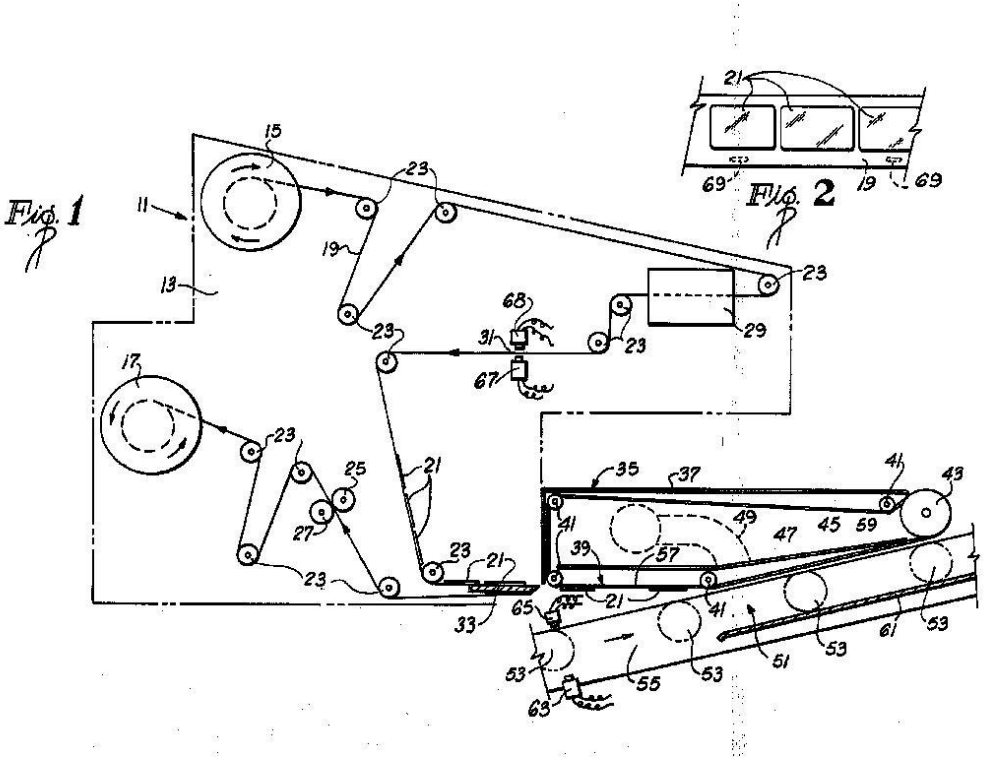

B65C 9/36

Wipers; Pressers

Definition statement

This place covers:

Illustrative example of subject matter classified in this group.

FIG. 1

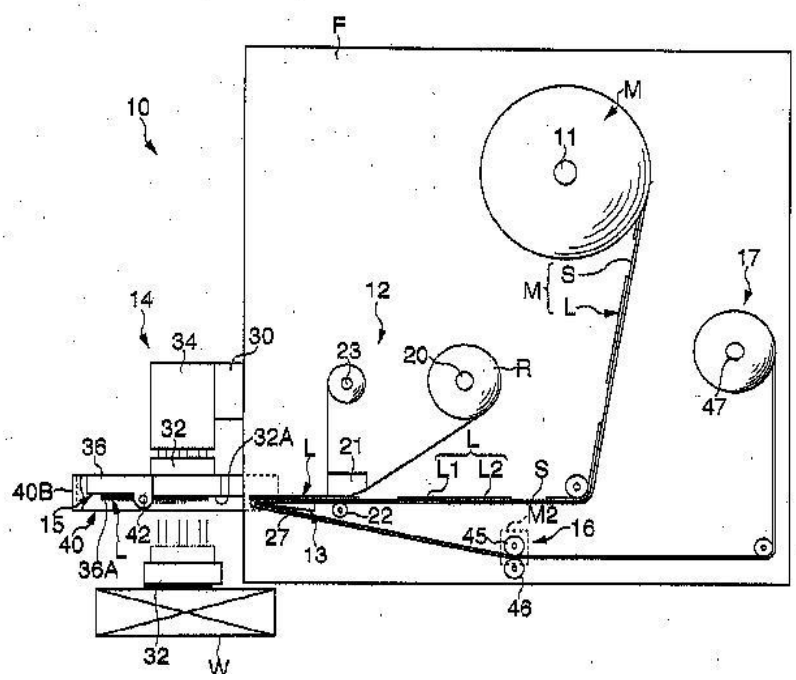

B65C 11/00

Manually-controlled or manually-operable label dispensers, e.g. modified for the application of labels to articles (special furniture, fittings, or accessories for shops, storehouses, bars, or the like A47F; for paper napkins, for toilet paper A47K; for playing cards A63F; movable-strip writing or reading apparatus B42D 19/00; adhesive tape dispensers B65H 35/002; dispensers for tickets G07B; coin-operated dispensers for stamps G07F {; dispensing devices for pamphlets from vehicles G09F 21/22})

Definition statement

This place covers:

Modified for the application of labels to articles.

Using electrical or electro-mechanical means.

Using pneumatic means.

Having printing equipment.

Having means for moistening the labels.

Having means for heating thermo-activatable labels.

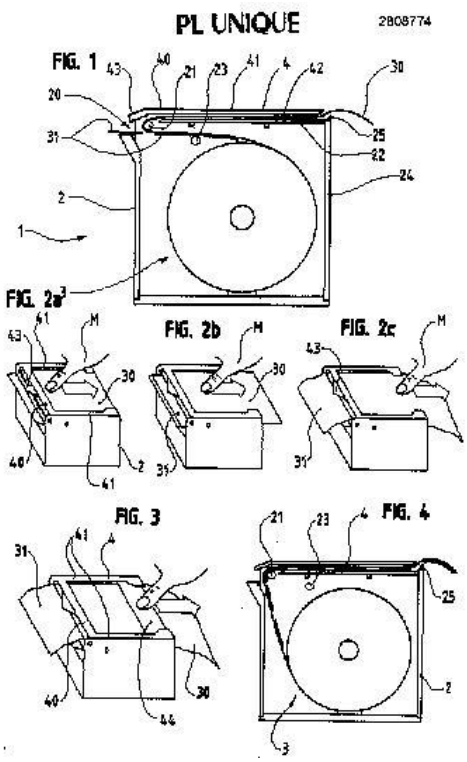

Special rules of classification

This group is directed to manually operated devices, whereas B65C 9/08 is directed to machine operated devices.

B65C 11/002

{modified for the application of labels to articles}

Definition statement

This place covers:

Illustrative example of subject matter classified in this group.

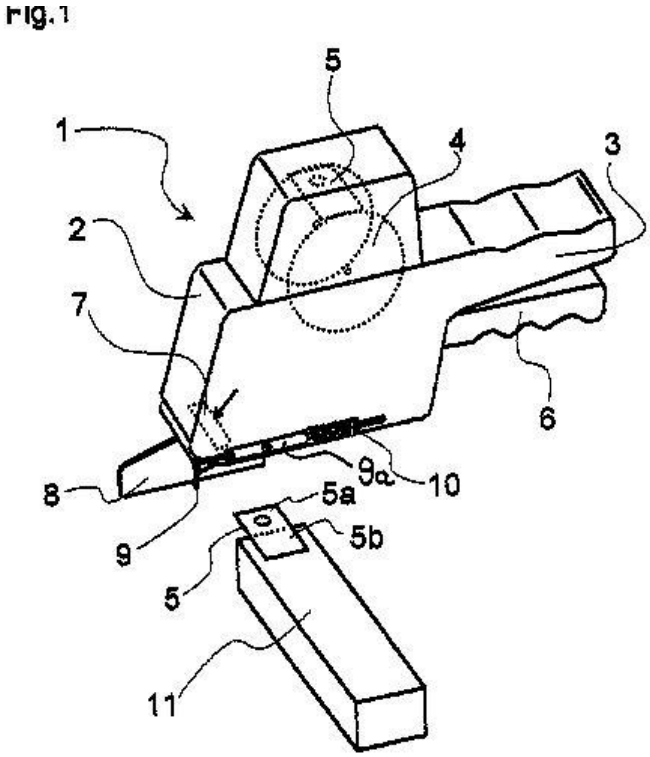

B65C 11/006

{using electrical or electro-mechanical means (B65C 11/0289 and B65C 11/066 take precedence)}

Definition statement

This place covers:

Illustrative example of subject matter classified in this group.

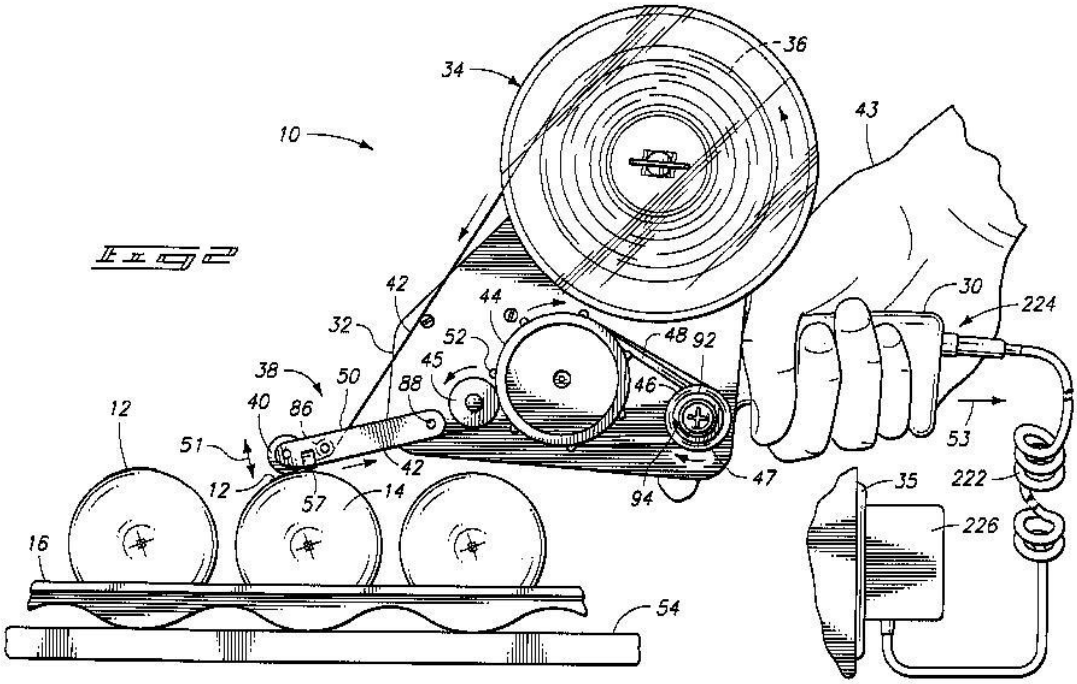

B65C 11/008

{using pneumatic means (B65C 11/0294 and B65C 11/068 take precedence)}

Definition statement

This place covers:

Illustrative example of subject matter classified in this group.

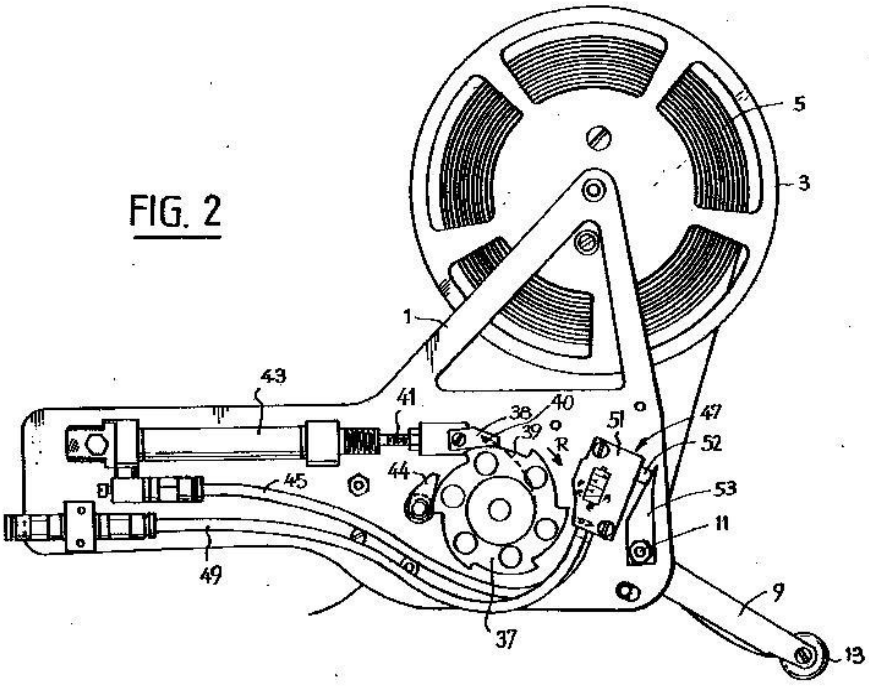

B65C 11/02

having printing equipment

Definition statement

This place covers:

Illustrative example of subject matter classified in this group.

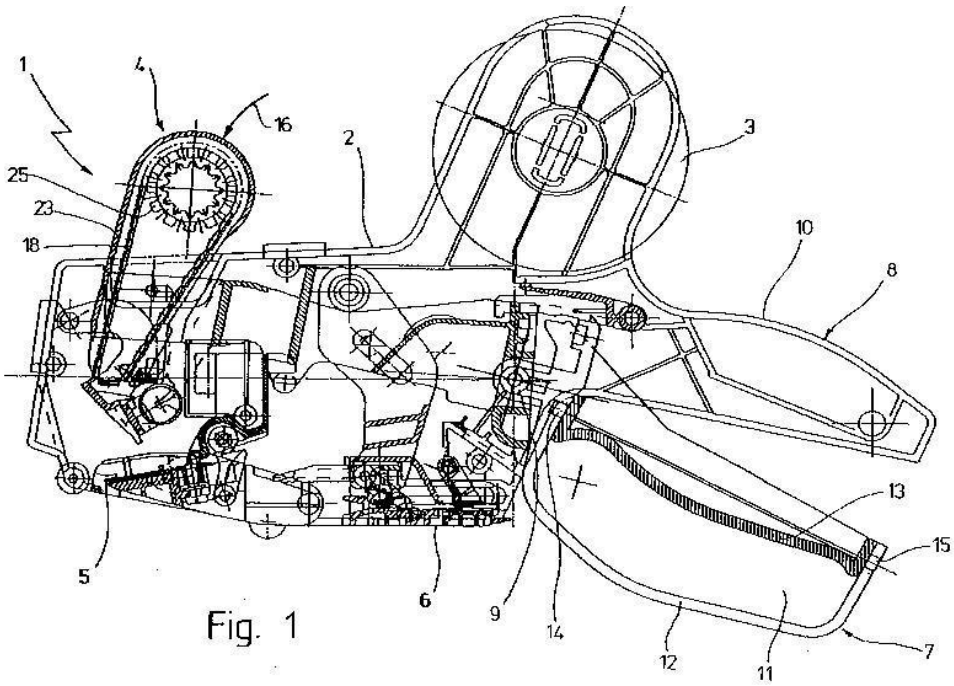

Fig. 1

B65C 11/0226

{electrically driven}

Definition statement

This place covers:

Illustrative example of subject matter classified in this group.

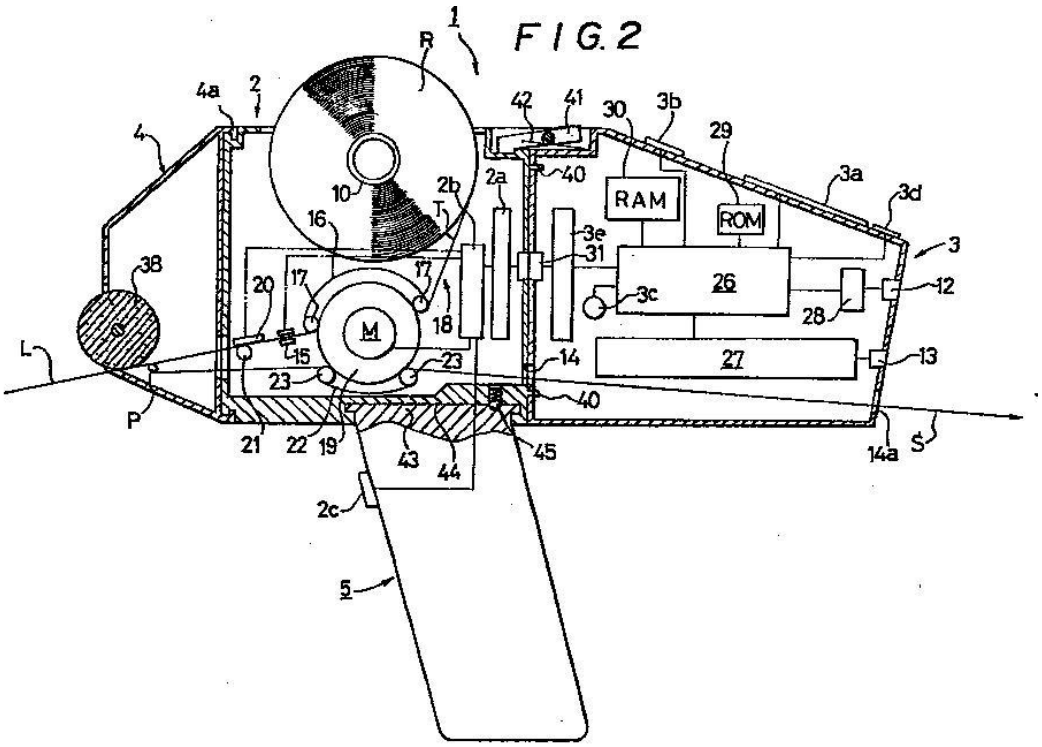

B65C 11/0231

{by actuating a hanbdle manually}

Definition statement

This place covers:

Illustrative example of subject matter classified in this group.

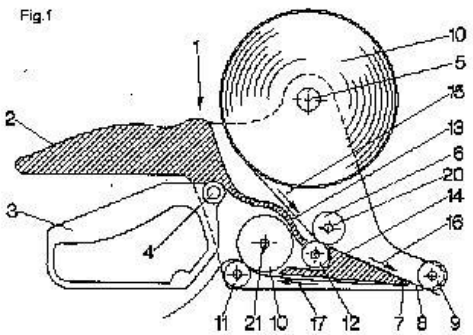

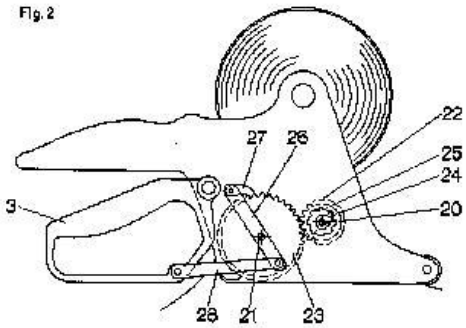

B65C 11/0242

{electrically driven}

Definition statement

This place covers:

Illustrative example of subject matter classified in this group.

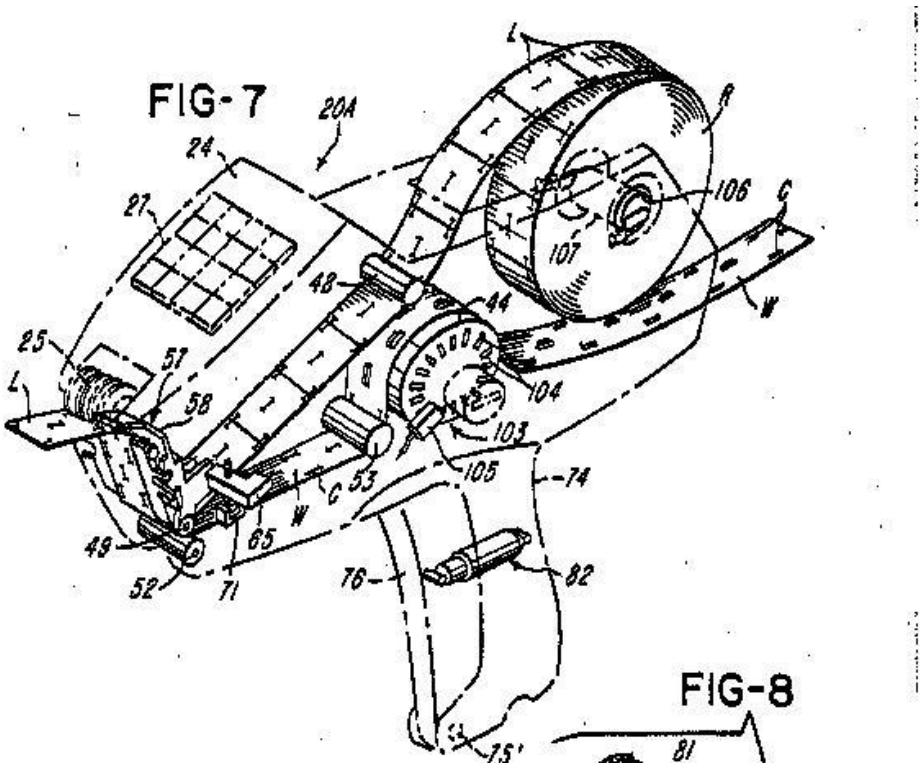

B65C 11/0247

{by actuating a handle manually}

Definition statement

This place covers:

Illustrative example of subject matter classified in this group.

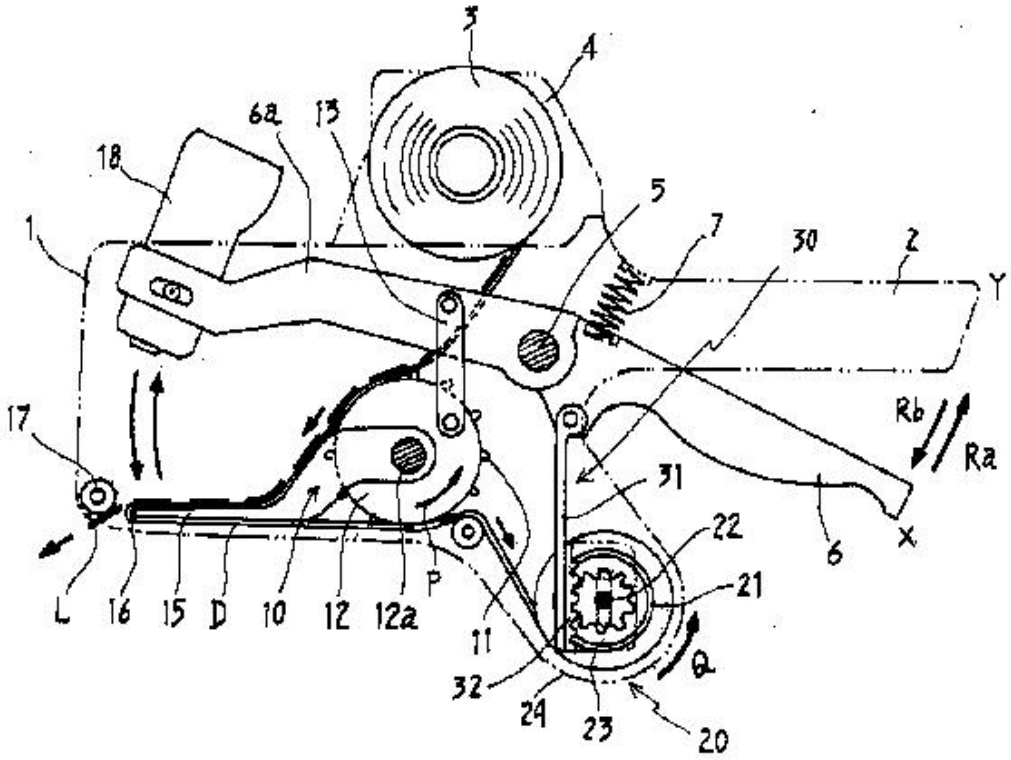

B65C 11/0263

{by actuating a handle manually}

Definition statement

This place covers:

Illustrative example of subject matter classified in this group.

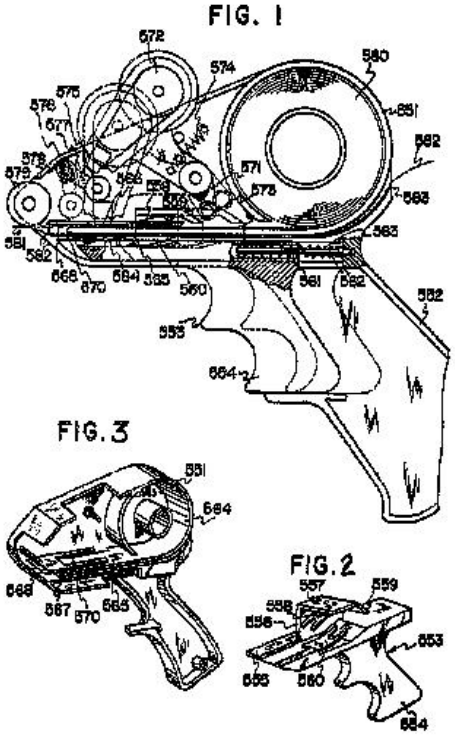

B65C 11/0273

{electrically driven}

Definition statement

This place covers:

Illustrative example of subject matter classified in this group.

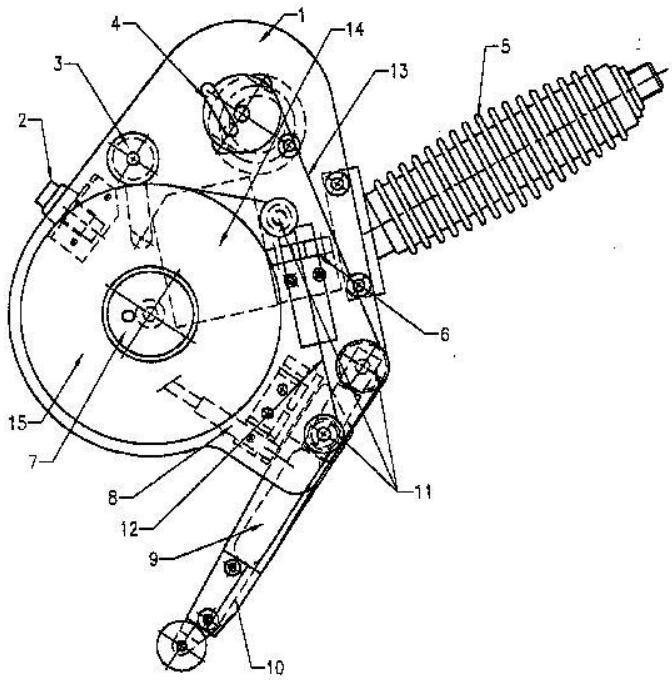

B65C 11/0278

{by actuating a handle manually}

Definition statement

This place covers:

Illustrative example of subject matter classified in this group.

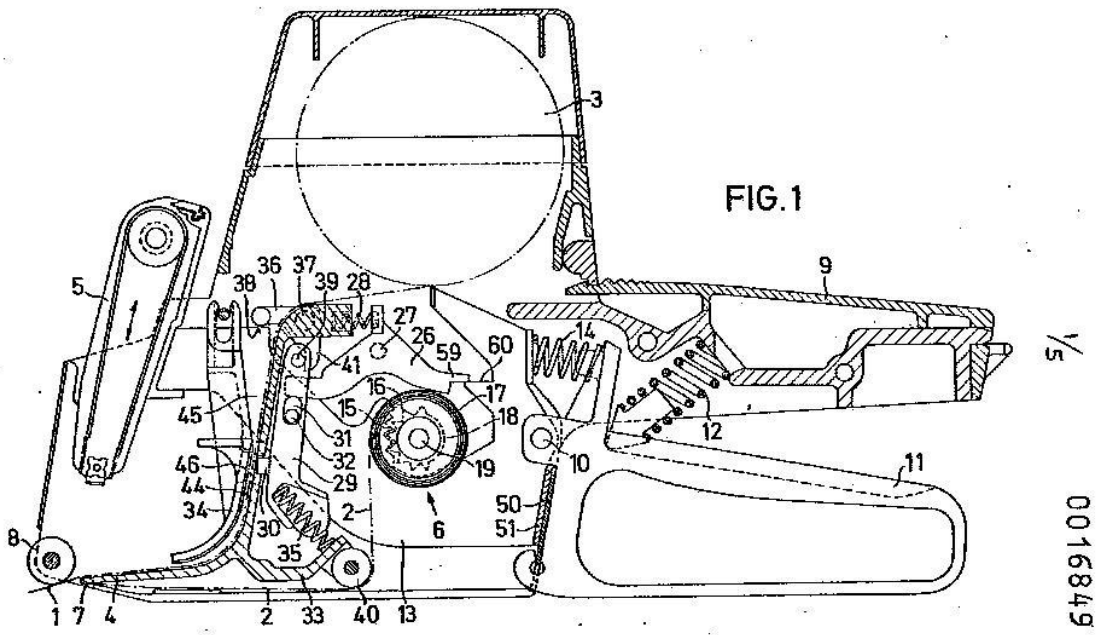

B65C 11/0284

{Linerless labels}

Definition statement

This place covers:

Illustrative example of subject matter classified in this group.

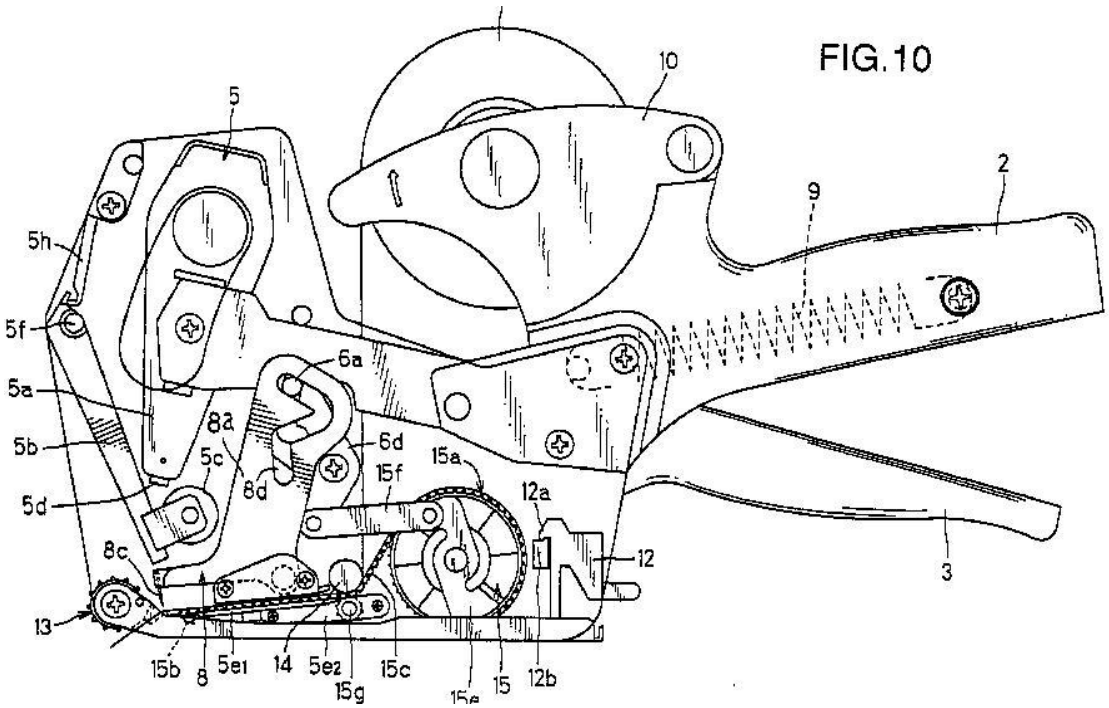

B65C 11/0289

{using electrical or electro-mechanical means (B65C 11/0205 takes precedence)}

Definition statement

This place covers:

Illustrative example of subject matter classified in this group.

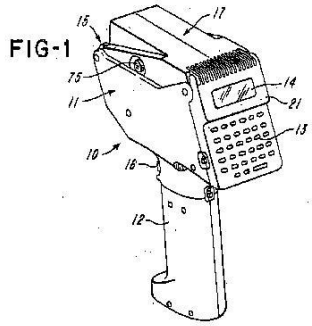

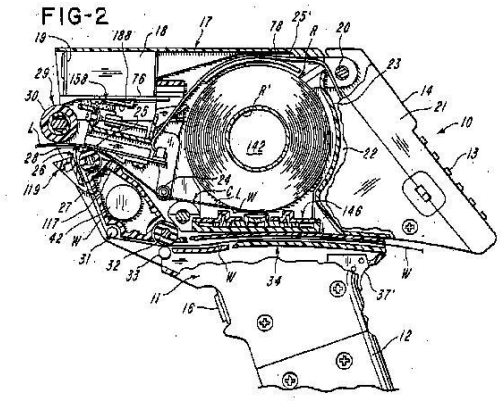

B65C 11/0294

{using pneumatic means}

Definition statement

This place covers:

Illustrative example of subject matter classified in this group.

U.S. Patent Nov. 9, 1993 Sheet 6 of 7 5,259,826

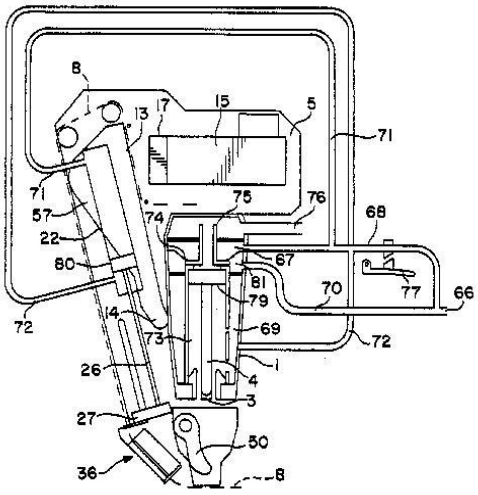

FIG. 6

B65C 11/04

having means for moistening the labels

Definition statement

This place covers:

Illustrative example of subject matter classified in this group.

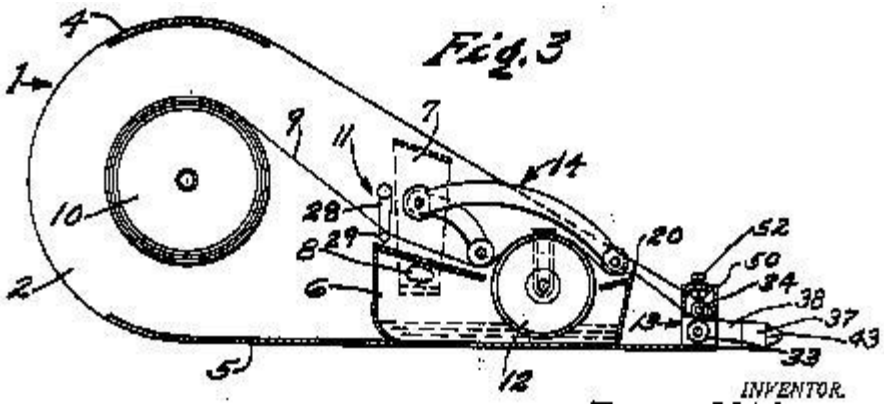

B65C 11/06

having means for heating thermo-activatable labels

Definition statement

This place covers:
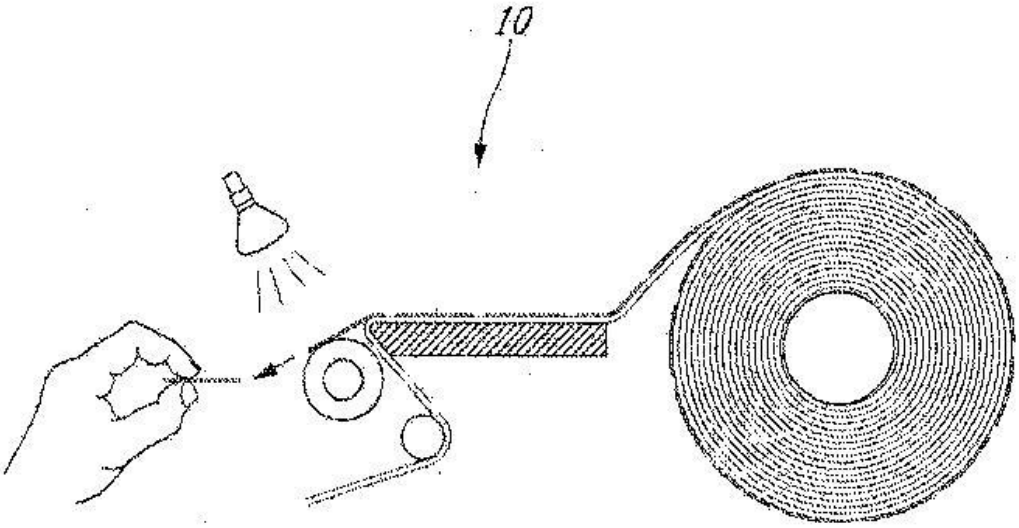
Illustrative example of subject matter classified in this group.