B60N

VEHICLE PASSENGER ACCOMMODATION NOT OTHERWISE PROVIDED FOR (furniture construction A47)

Definition statement

This place covers:

Seat specially adapted for vehicles (B60N 2/00)

Arrangements or adaptations of other passenger fittings (B60N 3/00)

Arrangements or devices on vehicles for entrance or exit control of passengers, e.g. turnstiles (B60N 5/00)

Manufacturing methods specially adapted for manufacturing seat covers (B60N 2/58).

Manufacturing mehtods specially adapted for manufacturing seat upholstery (B60N 2/70).

References

Informative references

Attention is drawn to the following places, which may be of interest for search:

Motor vehicles	B62D
Locks in general	E05B

B60N 2/00

Seats specially adapted for vehicles (for facilitating access of invalids to, or exit of invalids from, vehicles A61G 3/02; railway seats B61D 33/00; cycle seats B62J 1/00; aircraft seats B64D 11/06, B64D 25/04, B64D 25/10)

References

Limiting references

This place does not cover:

Railway seats	B61D 33/00
Cycle seats	B62J 1/00
Aircraft seats	B64D 11/06, B64D 25/04, B64D 25/10

Informative references

Attention is drawn to the following places, which may be of interest for search:

Seats in general (furniture)	A47C 7/00

Special rules of classification

1) In this subclass multiple classification is applied, i.e. when a document shows a disclosure, which is relevant for a plurality of groups, the different aspects will be classified as invention information in all relevant groups. Thus a plurality of CCI symbols will be given.

2) Generally all information will be classified as invention information where a CCI symbol exist, because there was no distiction made between inventive and additional information in the past. The breakdowns groups with 2000 symbols (CCA) could also contain invention information.

Glossary of terms

In this place, the following terms or expressions are used with the meaning indicated:

Seat	the seat comprises the cushion, the back-rest, the head and armrests and the connecting elements connecting the seat to the vehicle floor
Cushion	seating part of a seat distinguished from the back-rest; the cushion comprises e.g. a frame and an upholstery, but does not comprise connecting legs to the vehicle floor
Back-rest	the back-rest like the cushion comprises e.g. a frame and an upholstery
Braking systems	Systems which prevent relative rotational movement between two adjusted elements, e.g. caused by vibration or other exterior forces, in particular for positioning devices not having a sufficient self locking effect, e.g. cycloidal or planetary gear mechanisms.

B60N 2/01

Arrangement of seats relative to one another

Definition statement

This place covers:

Illustrative example of subject matter classified in this group.

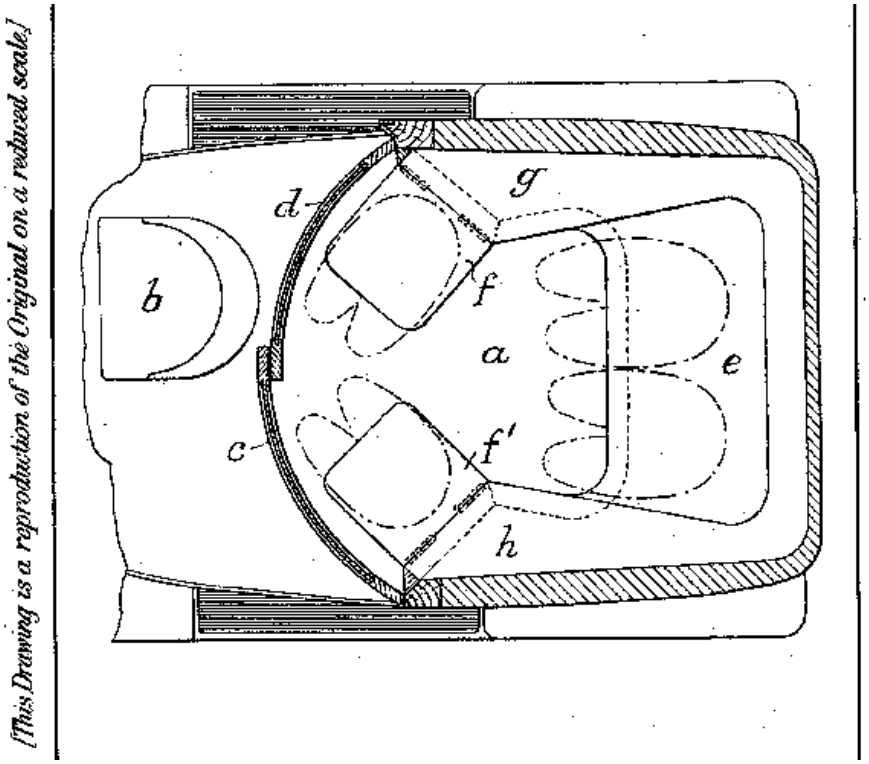

B60N 2/015

Attaching seats directly to vehicle chassis

Definition statement

This place covers:

Illustrative example of subject matter classified in this group.

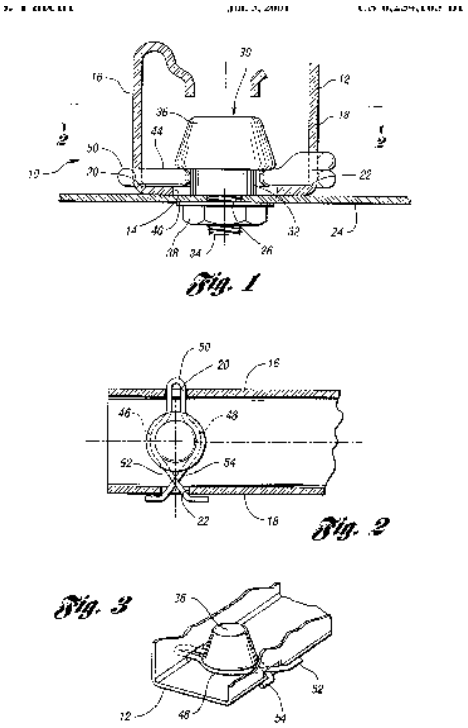

B60N 2/01508

{using quick release attachments}

Definition statement

This place covers:

Illustrative example of subject matter classified in this group.

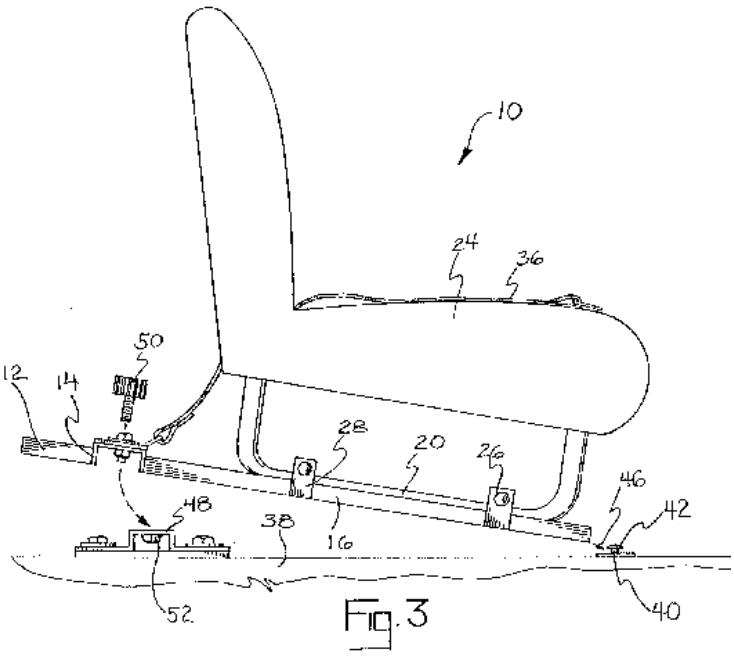

Fig. 3

B60N 2/01525

{with locking elements expanding inside or under the vehicle floor or rail}

Definition statement

This place covers:

Illustrative example of subject matter classified in this group.

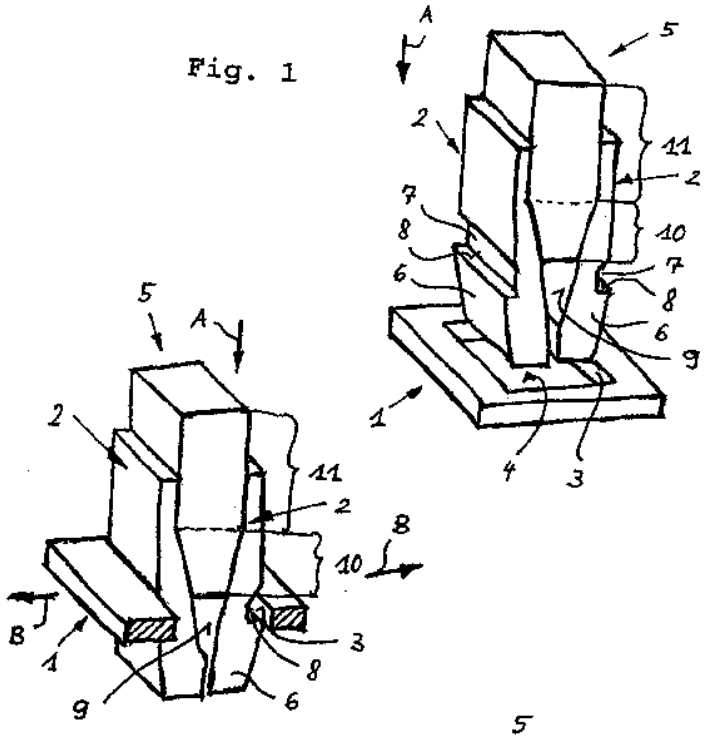

B60N 2/01533

{using balls interlocking with notches (interlocking balls in general E05B 63/121)}

Definition statement

This place covers:

Illustrative example of subject matter classified in this group.

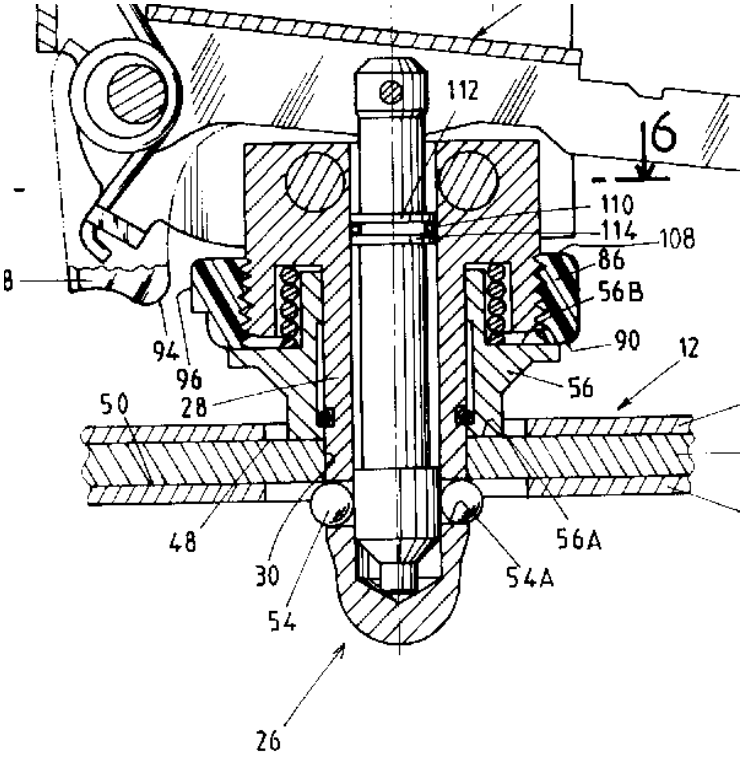

B60N 2/01541

{using moving hooks (B60N 2/01583 takes precedence)}

Definition statement

This place covers:

Illustrative example of subject matter classified in this group.

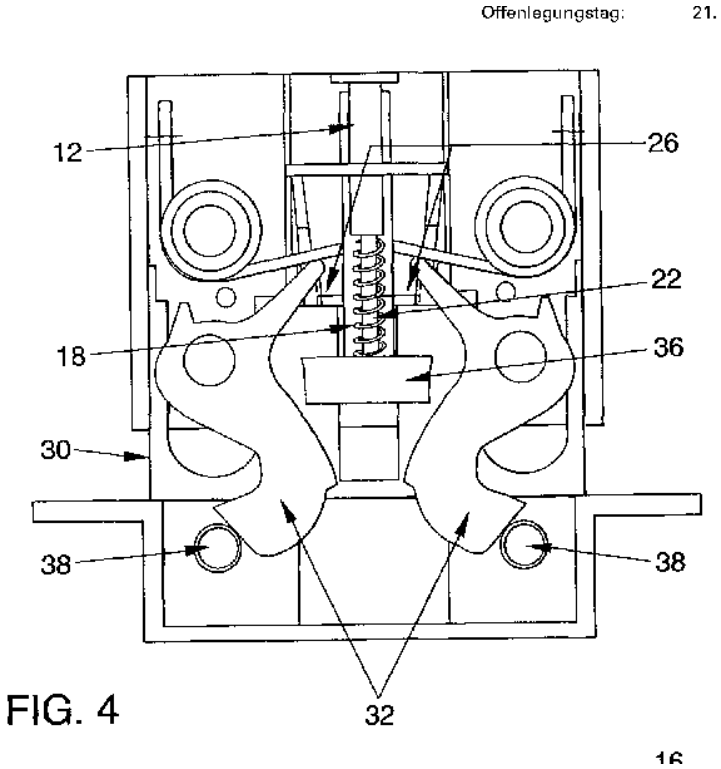

FIG. 4

B60N 2/0155

{with the locking mechanism on the vehicle floor or rail}

Definition statement

This place covers:

Illustrative example of subject matter classified in this group.

FIG.1

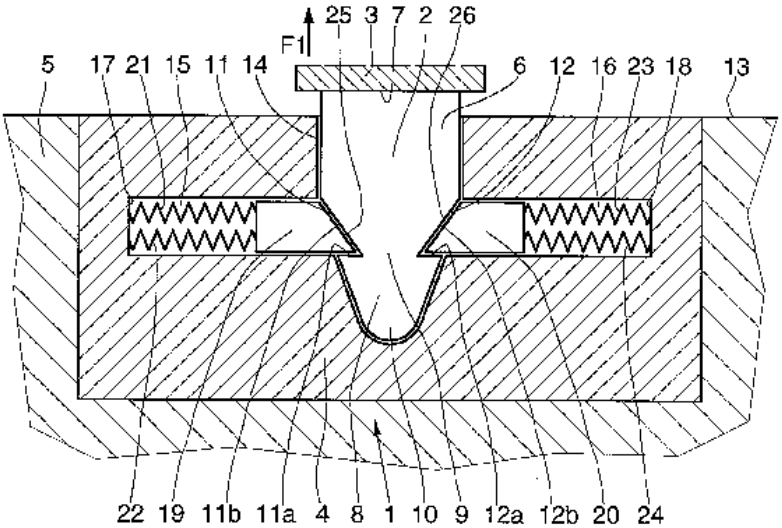

FIG.2

B60N 2/01558

{with key and slot}

Definition statement

This place covers:

Illustrative example of subject matter classified in this group.

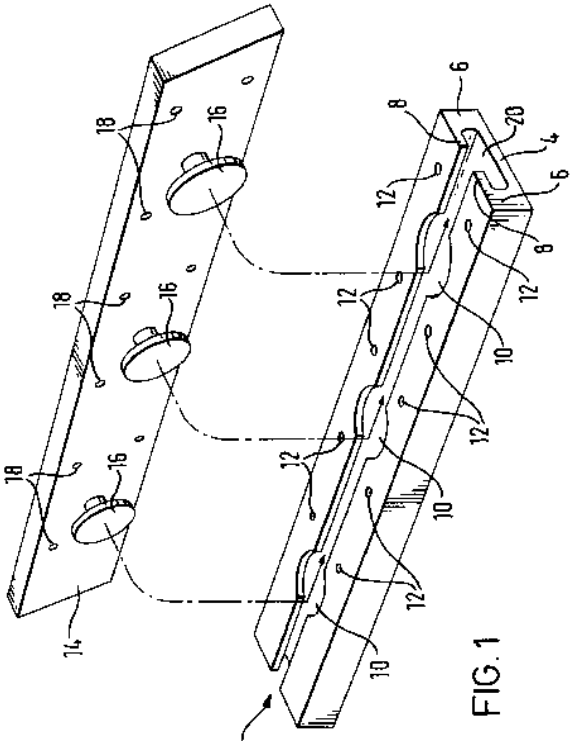

FIG. 1

B60N 2/01566

{key rotating about a vertical axis}

Definition statement

This place covers:

Illustrative example of subject matter classified in this group.

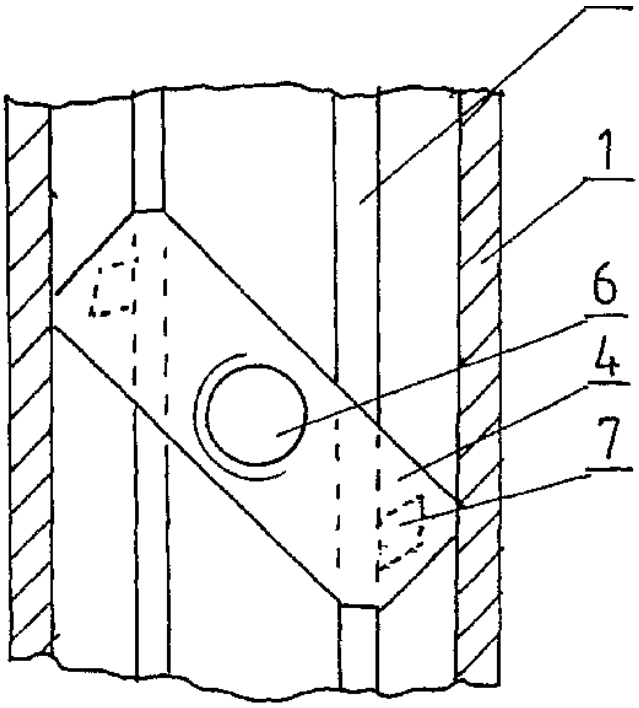

B60N 2/01575

{key sliding inside the vehicle floor or rail}

Definition statement

This place covers:

Illustrative example of subject matter classified in this group.

2/2

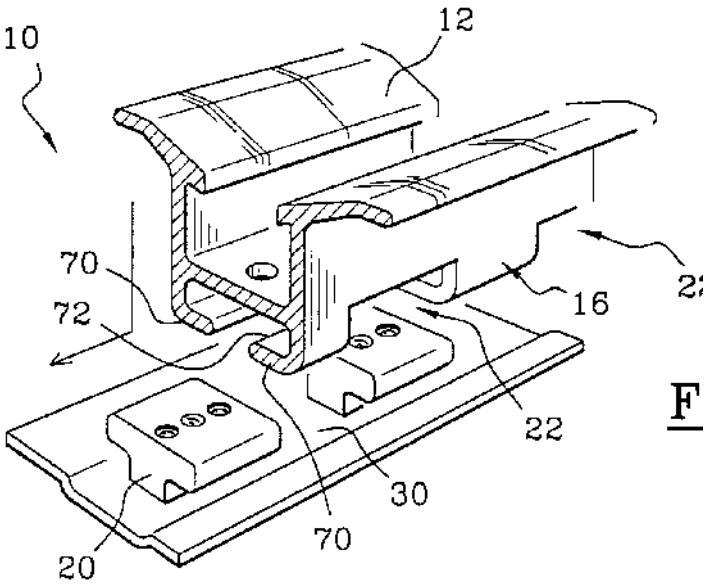

F

12

B60N 2/01583

{locking on transversal elements on the vehicle floor or rail, e.g. transversal rods}

Definition statement

This place covers:

Illustrative example of subject matter classified in this group.

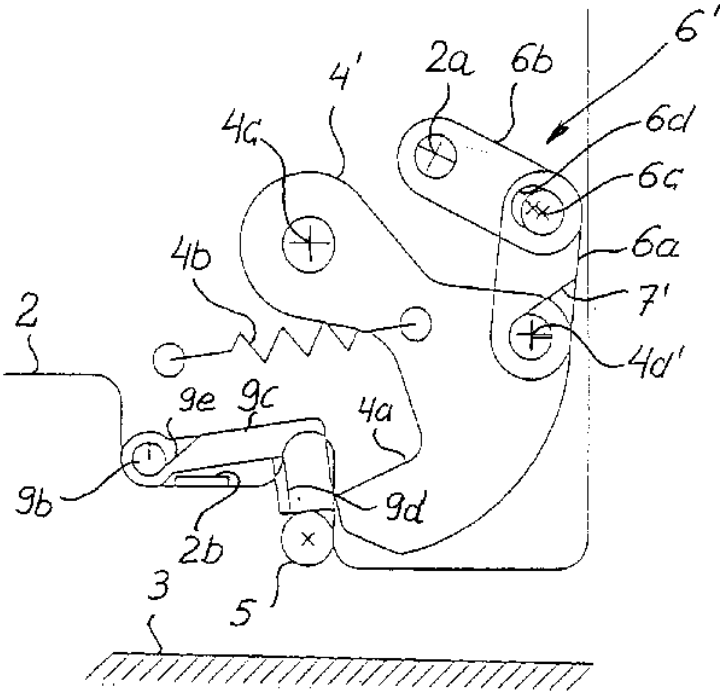

B60N 2/01591

{with wheels coupled to the seat}

Definition statement

This place covers:

Illustrative example of subject matter classified in this group.

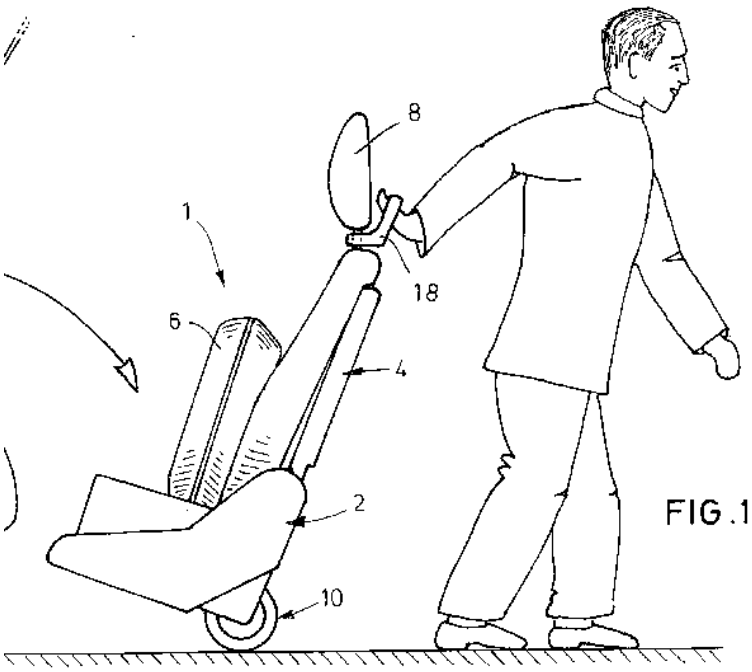

B60N 2/0224

{Non-manual adjustment, e.g. with electrical operation}

References

Limiting references

This place does not cover:

Seat or part thereof being moved by a central command actuator to selectively switch on or engage one of several special purpose circuits or mechanisms	B60N 2/0296
Slidable headrests characterised by adjusting mechanism, using electric motors	B60N 2/4829
Tiltable headrests characterised by adjusting mechanism, using electric motors	B60N 2/4852
Seat suspension devices using fluid means	B60N 2/52
Flexible bowed lumbar supports with motor driven adjustments	B60N 2/6673

B60N 2/0244

{with logic circuits}

Definition statement

This place covers:

Illustrative example of subject matter classified in this group.

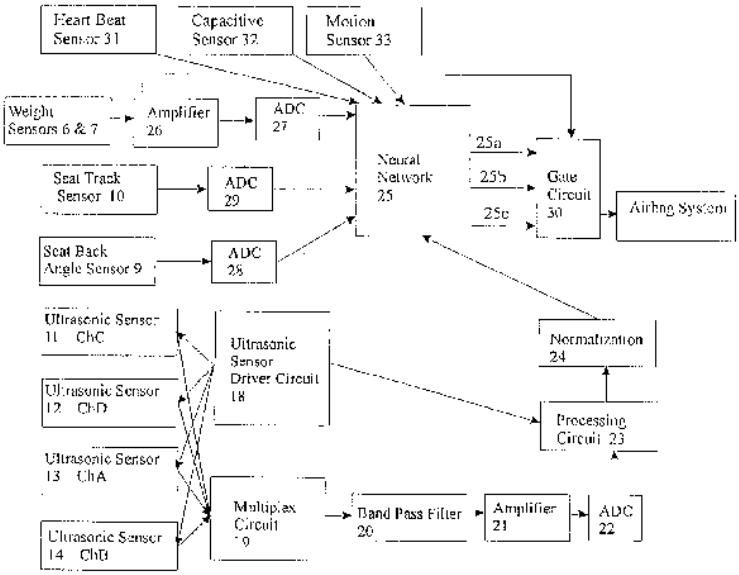

FIG. 3

B60N 2/028

{Elastically mounted back-rests}

Definition statement

This place covers:

Illustrative example of subject matter classified in this group.

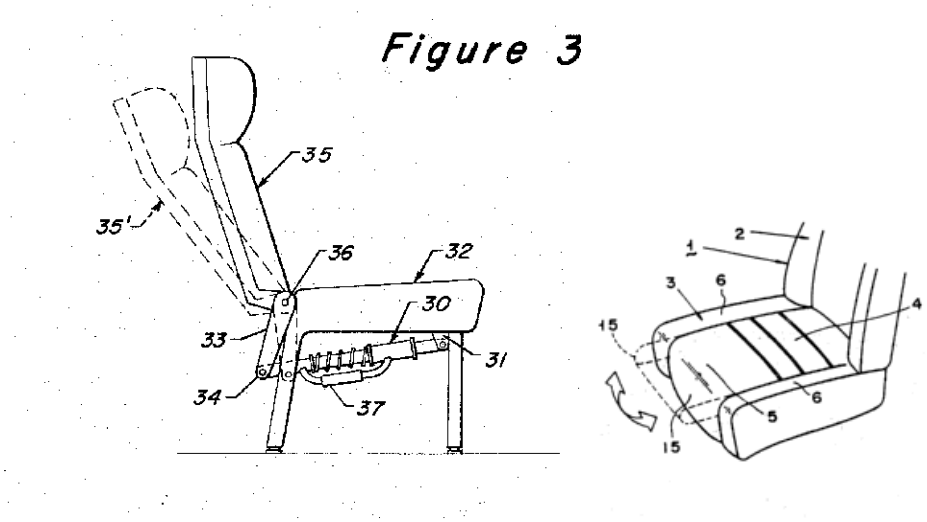

B60N 2/0284

{Adjustable seat-cushion length (B60N 2/0224 takes precedence)}

Definition statement

This place covers:

Seats where the effictive area of the seat is modified, e.g. by moving the back rest or by slidable extention parts, see illustrative examples of subject matter classified in this group.

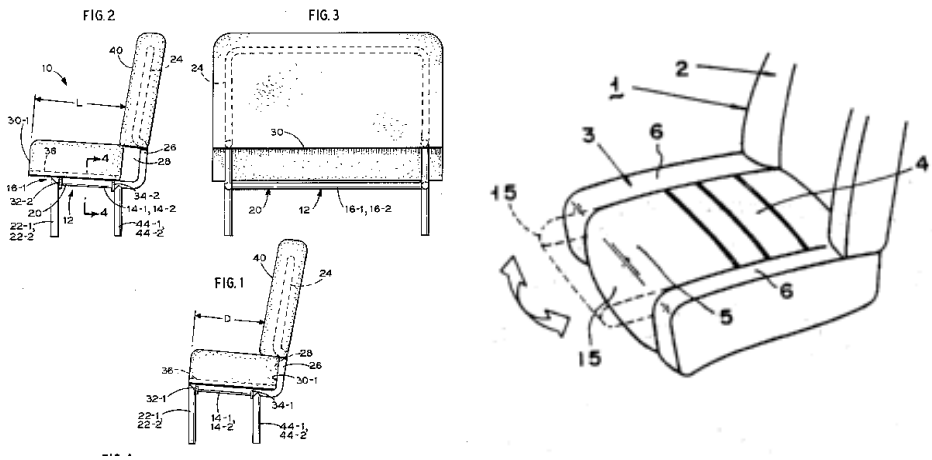

B60N 2/0292

{Multiple configuration seats, e.g. for spacious vehicles or mini-buses}

Definition statement

This place covers:

Illustrative example of subject matter classified in this group.

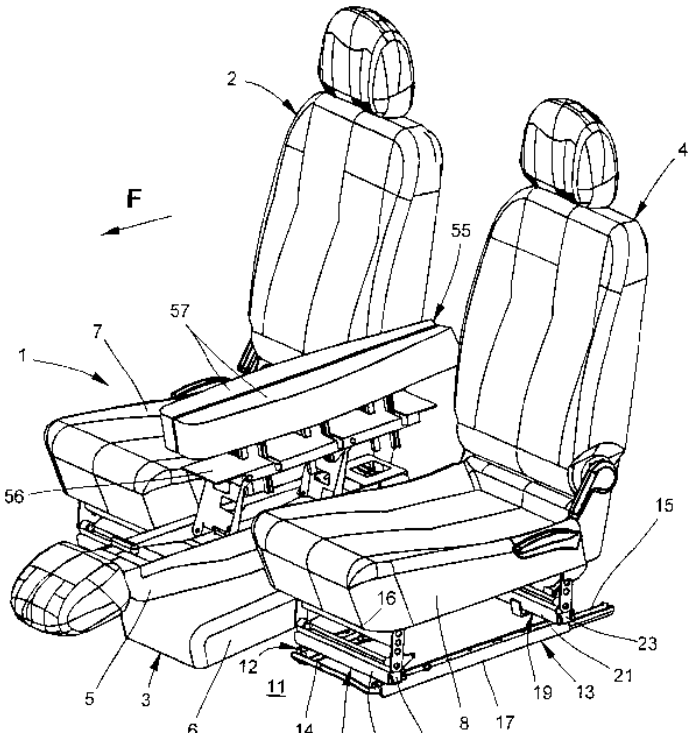

B60N 2/0296

{Central command actuator to selectively switch on or engage one of several special purpose circuits or mechanisms}

Definition statement

This place covers:

Illustrative example of subject matter classified in this group.

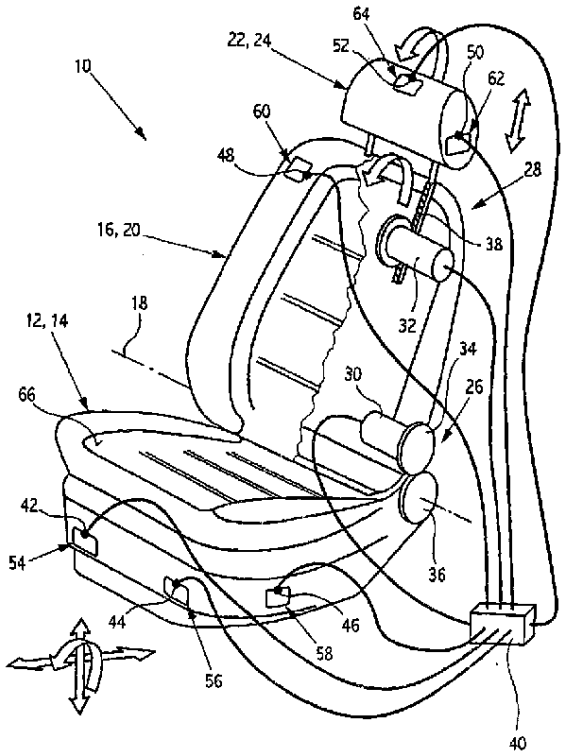

B60N 2/045

{Longitudinal adjustment by means of articulated rods supporting the seat, e.g. parallelogram mechanisms (B60N 2/38 takes precedence)}

Definition statement

This place covers:

Illustrative example of subject matter classified in this group.

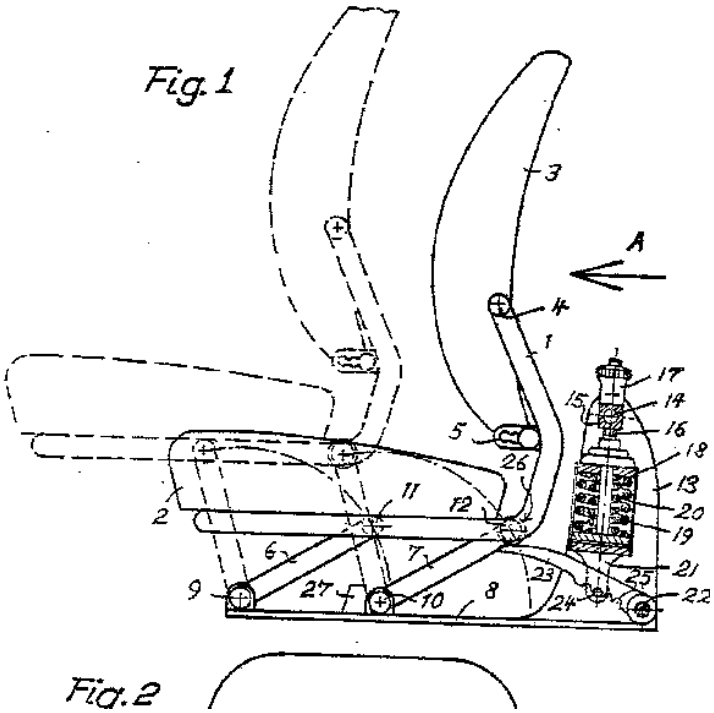

B60N 2/067

{by linear actuators, e.g. linear screw mechanisms}

Definition statement

This place covers:

Illustrative example of subject matter classified in this group.

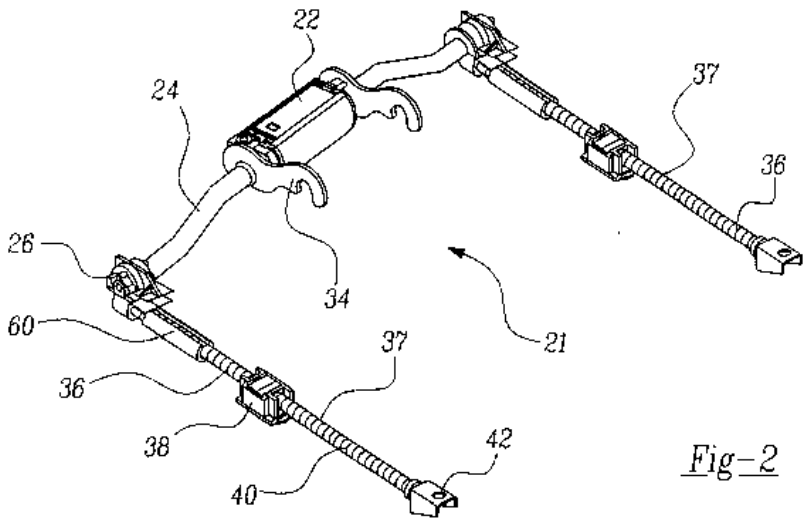

Fig-2

B60N 2/0705

{omega-shaped}

Definition statement

This place covers:

Illustrative example of subject matter classified in this group.

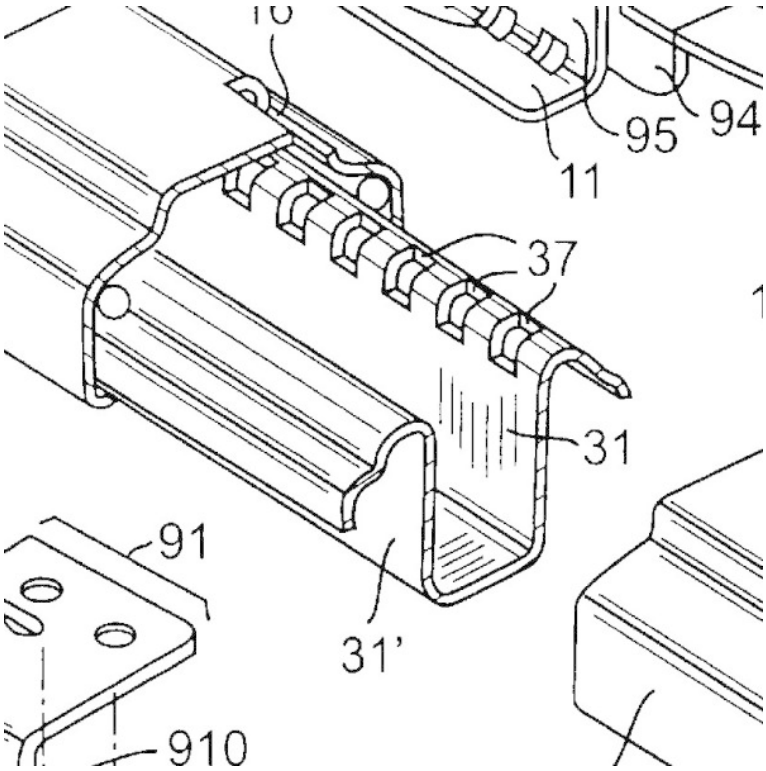

B60N 2/0707

{J-shaped}

Definition statement

This place covers:

Illustrative example of subject matter classified in this group.

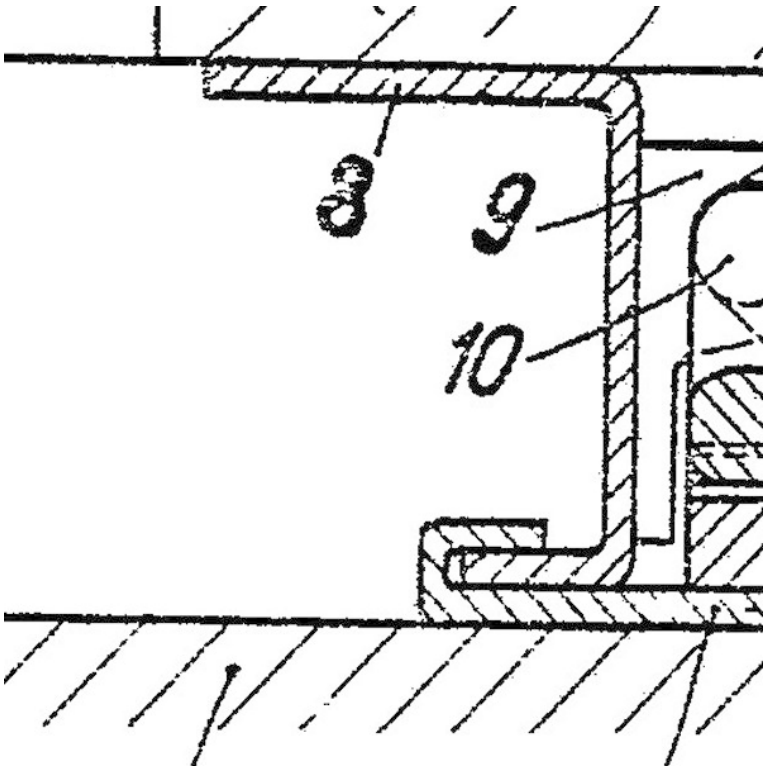

B60N 2/071

{T-shaped}

Definition statement

This place covers:

Illustrative example of subject matter classified in this group.

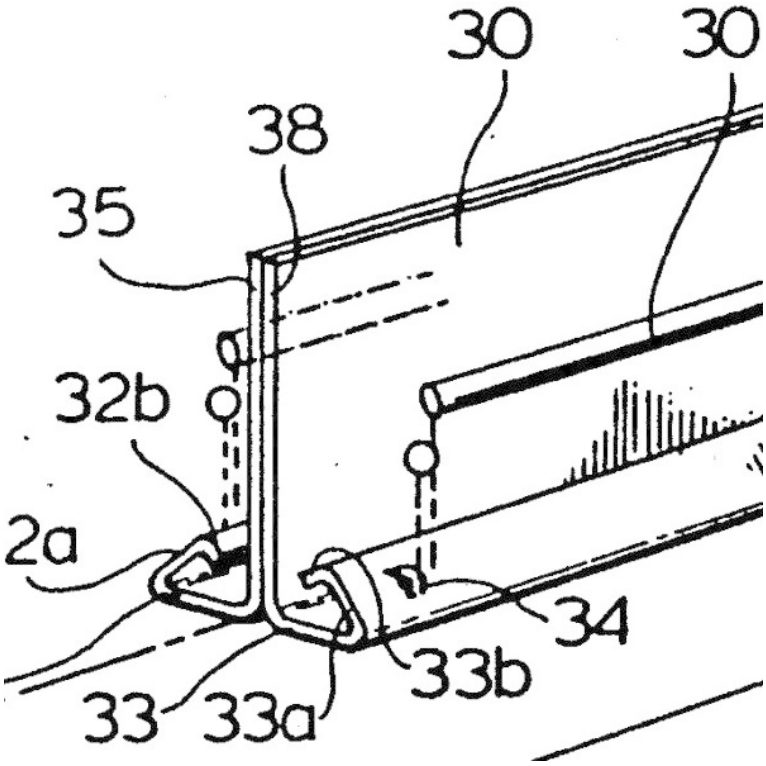

B60N 2/0712

{H or double T-shaped}

Definition statement

This place covers:

Illustrative example of subject matter classified in this group.

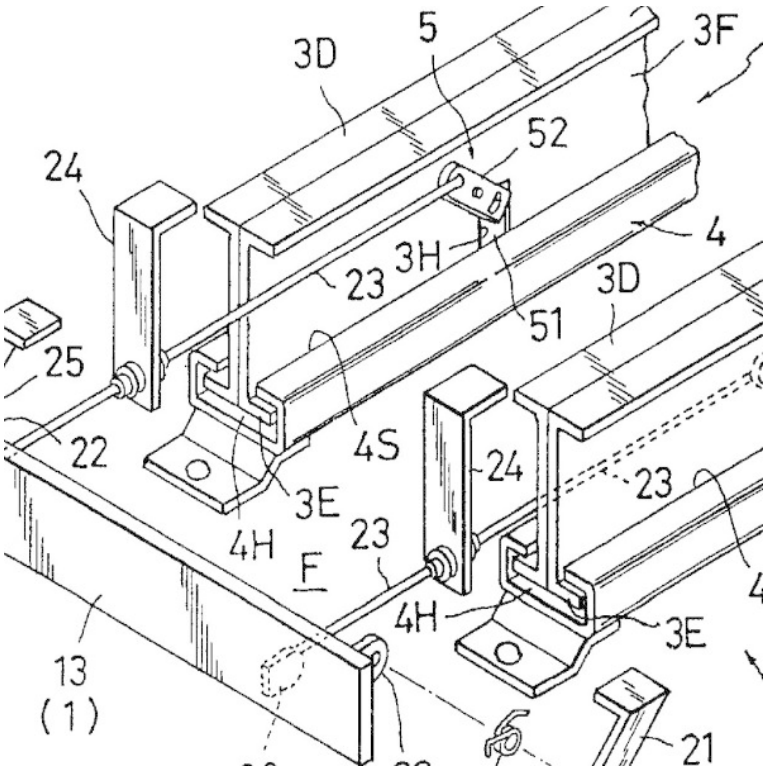

B60N 2/0715

{C or U-shaped}

Definition statement

This place covers:

Illustrative example of subject matter classified in this group.

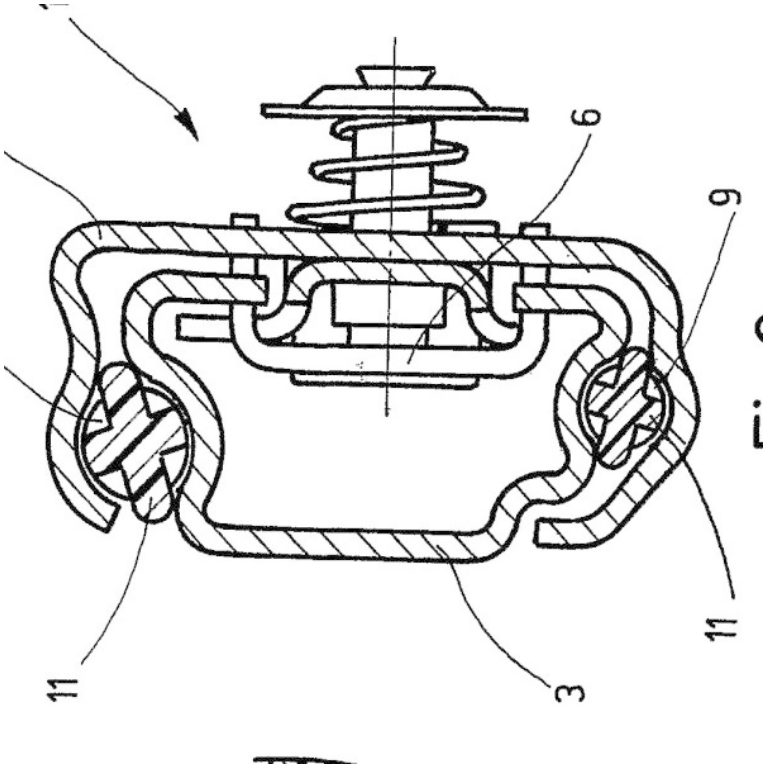

B60N 2/0717

{Rounded, e.g. circular}

Definition statement

This place covers:

Illustrative example of subject matter classified in this group.

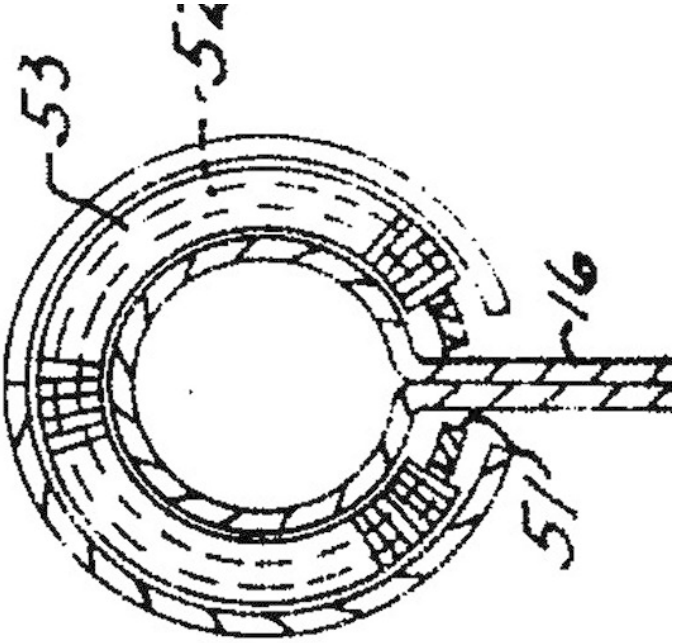

B60N 2/072

{Complex cross-section, e.g. obtained by extrusion}

Definition statement

This place covers:

Illustrative example of subject matter classified in this group.

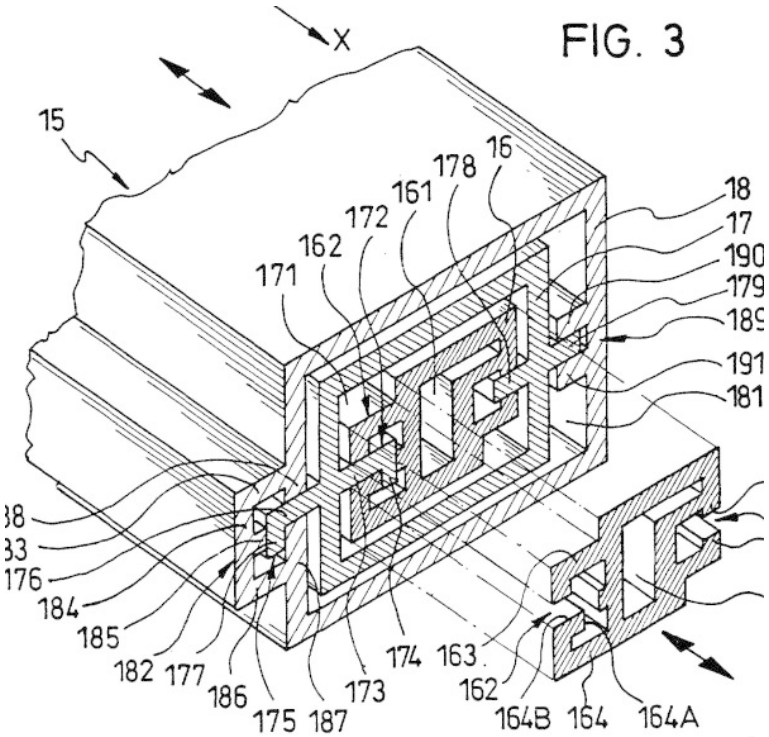

B60N 2/0725

{Closing members for covering the slide}

Definition statement

This place covers:

Illustrative example of subject matter classified in this group.

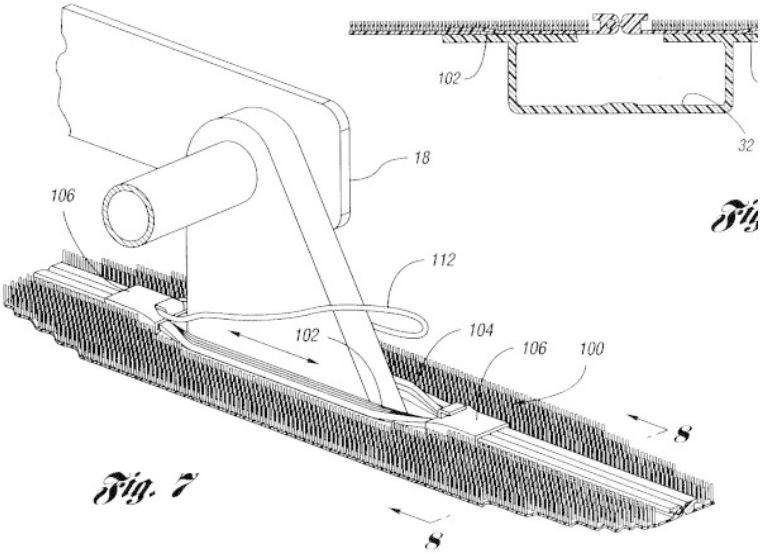

Fig. 7

B60N 2/073

{Reinforcement members preventing slide dislocation}

Definition statement

This place covers:

Illustrative example of subject matter classified in this group.

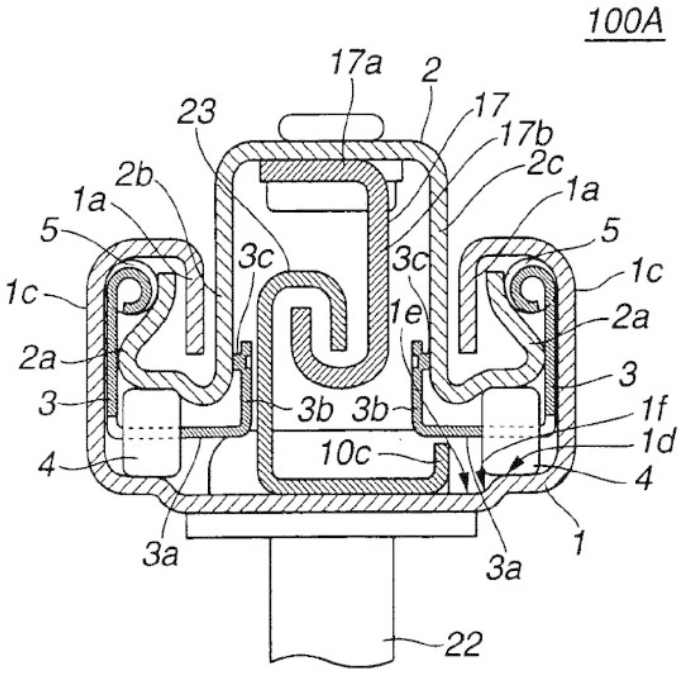

B60N 2/0732

{Attachment of seat frame to the slide, e.g. eyelets}

Definition statement

This place covers:

Illustrative example of subject matter classified in this group.

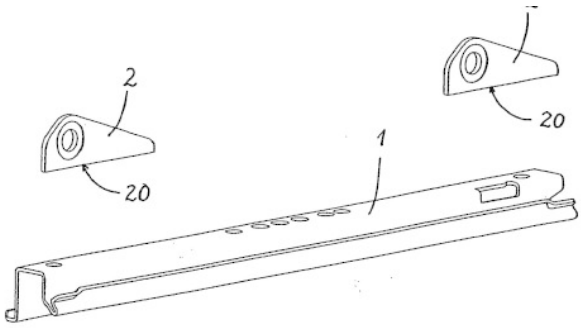

Fig. 1a

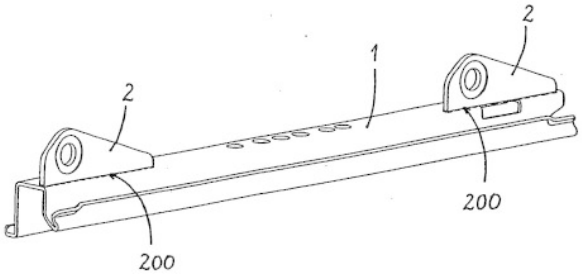

B60N 2/074

{rotated about the transversal axis}

Definition statement

This place covers:

Illustrative example of subject matter classified in this group.

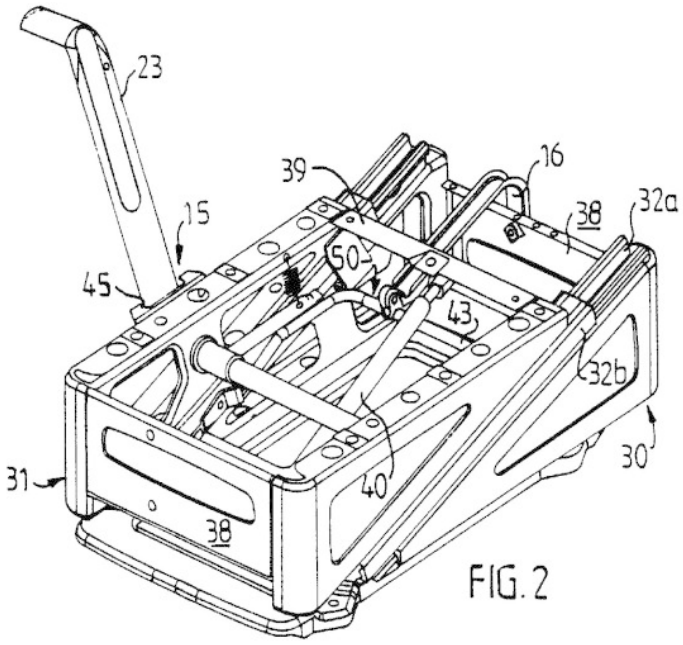

FIG. 2

B60N 2/0742

{rotated about the vertical axis}

Definition statement

This place covers:

Illustrative example of subject matter classified in this group.

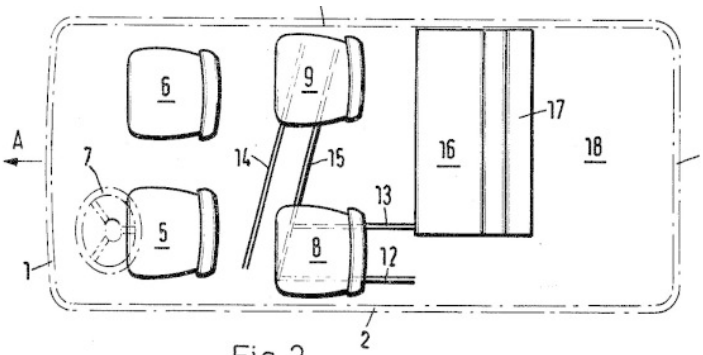

Fig. 2

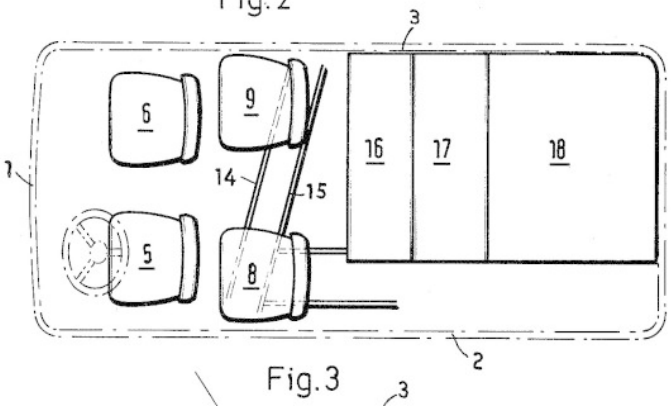

Fig. 3

B60N 2/0745

{the slide path being curved}

Definition statement

This place covers:

Illustrative example of subject matter classified in this group.

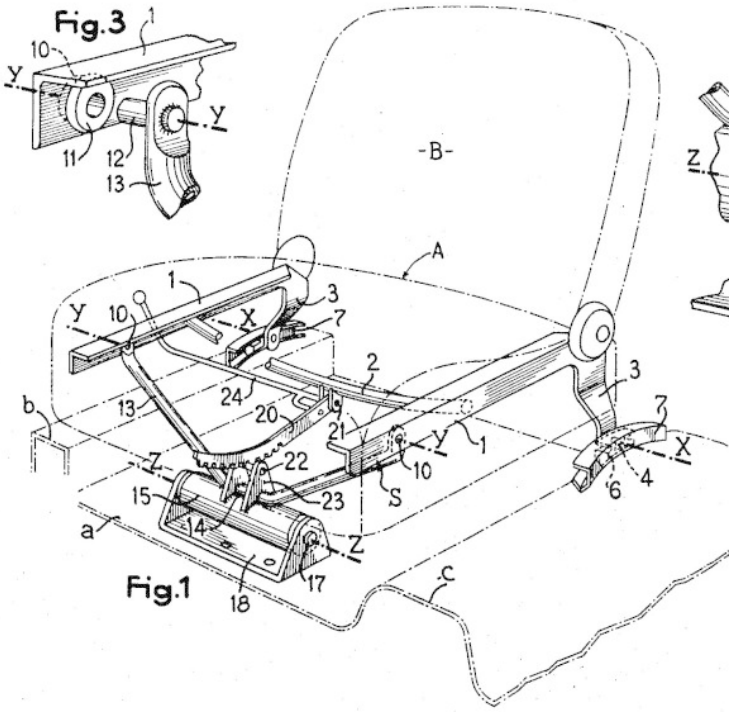

B60N 2/0747

{the opening of the cross section being oriented in a direction different from the vertical, e.g. transversal}

Definition statement

This place covers:

Illustrative example of subject matter classified in this group.

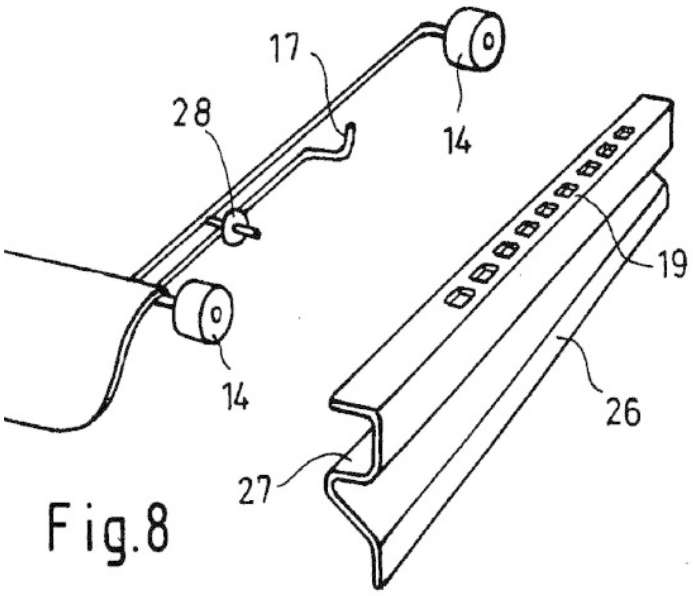

Fig.8

B60N 2/075

roller-less

Definition statement

This place covers:

Illustrative example of subject matter classified in this group.

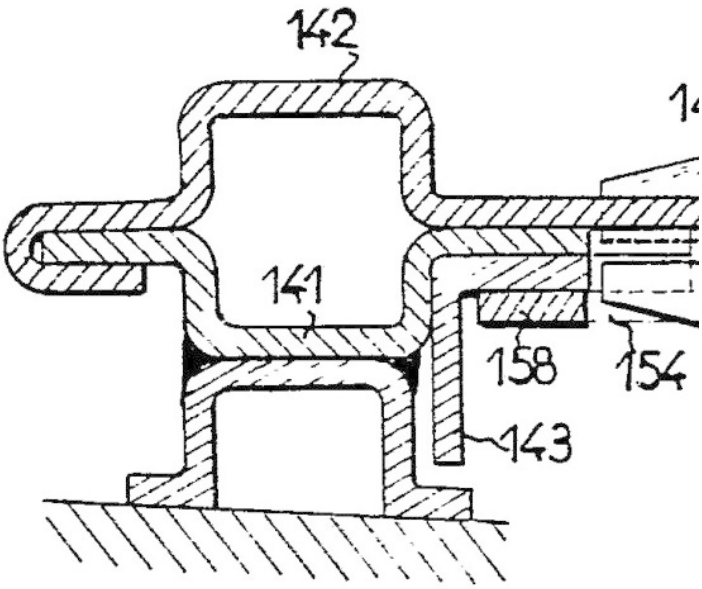

B60N 2/0806

{with pin alignment systems, e.g. with at least one of a plurality of locking pins always aligned w.r.t. at least one of a plurality of pin-receiving elements}

Definition statement

This place covers:

Illustrative example of subject matter classified in this group.

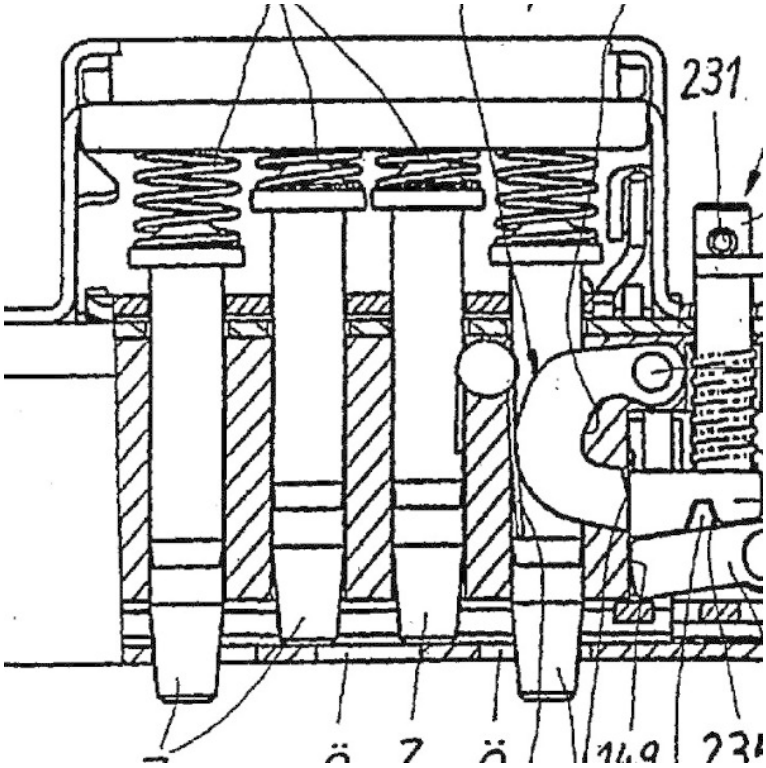

B60N 2/0818

{inside the rail}

Definition statement

This place covers:

Illustrative example of subject matter classified in this group.

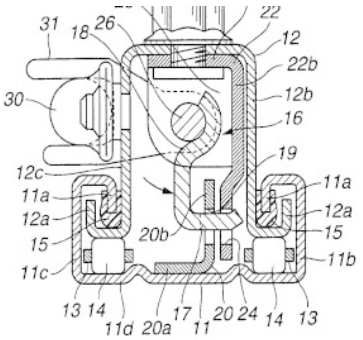

FIG.4

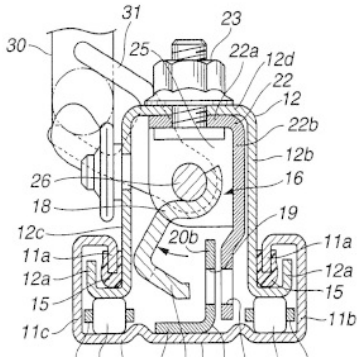

B60N 2/0825

{outside the rail}

Definition statement

This place covers:

Illustrative example of subject matter classified in this group.

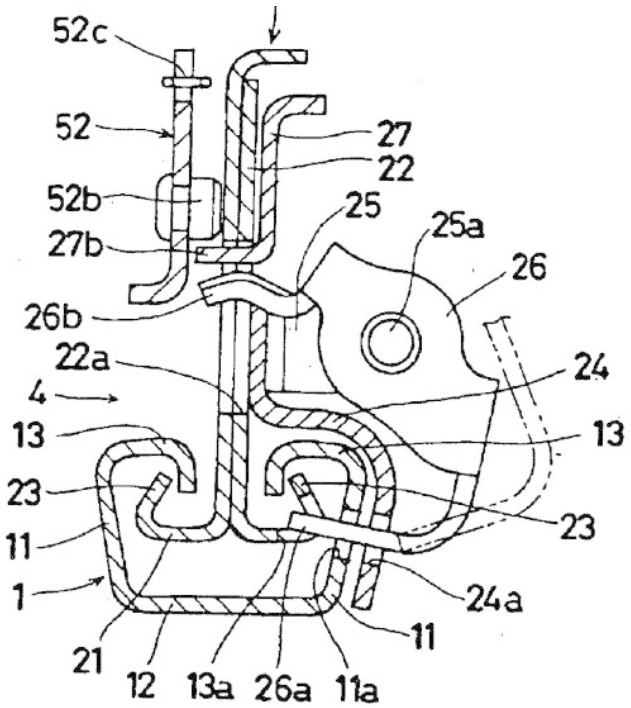

B60N 2/0843

{about a longitudinal axis}

Definition statement

This place covers:

Illustrative example of subject matter classified in this group.

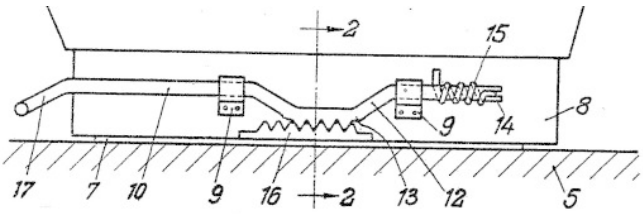

Bild 2

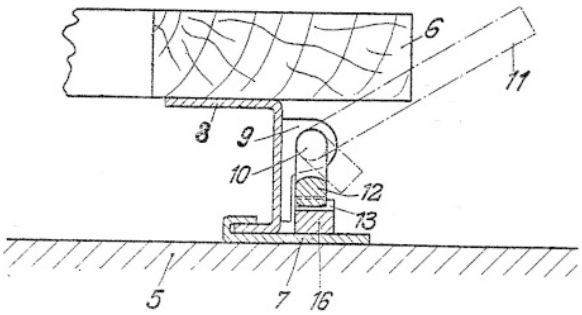

B60N 2/085

{about a transversal axis}

Definition statement

This place covers:

Illustrative example of subject matter classified in this group.

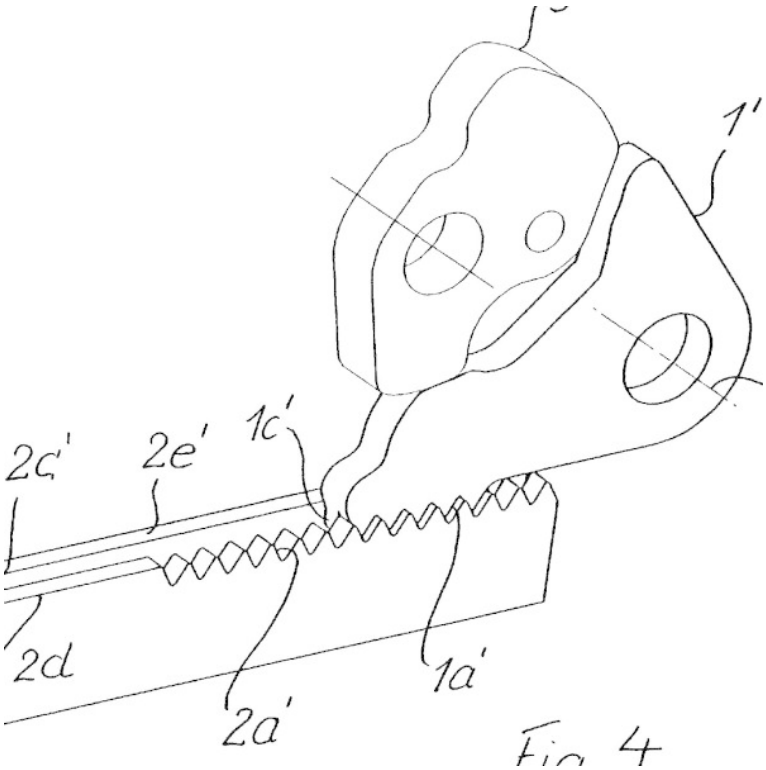

B60N 2/0856

{about a vertical axis}

Definition statement

This place covers:

Illustrative example of subject matter classified in this group.

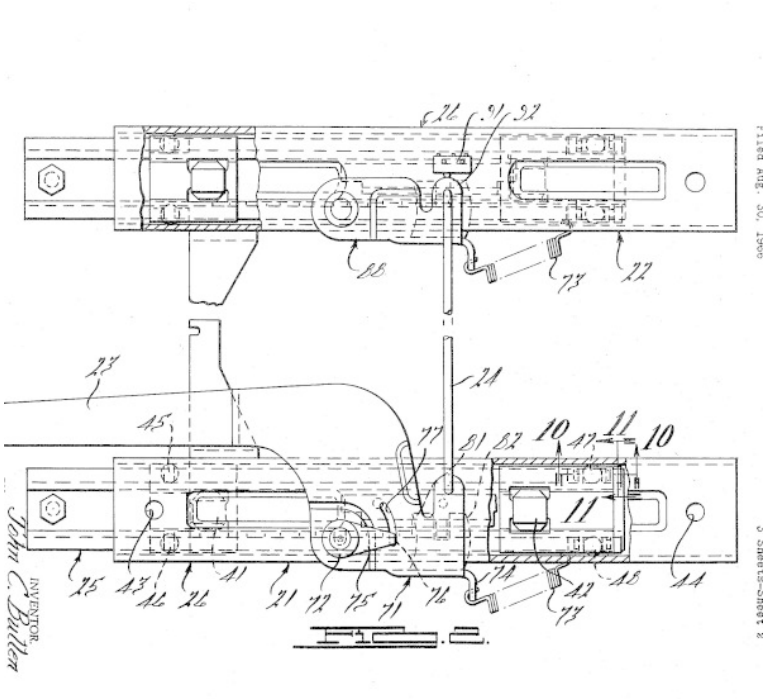

B60N 2/0868

{in a transversal direction}

Definition statement

This place covers:

Illustrative example of subject matter classified in this group.

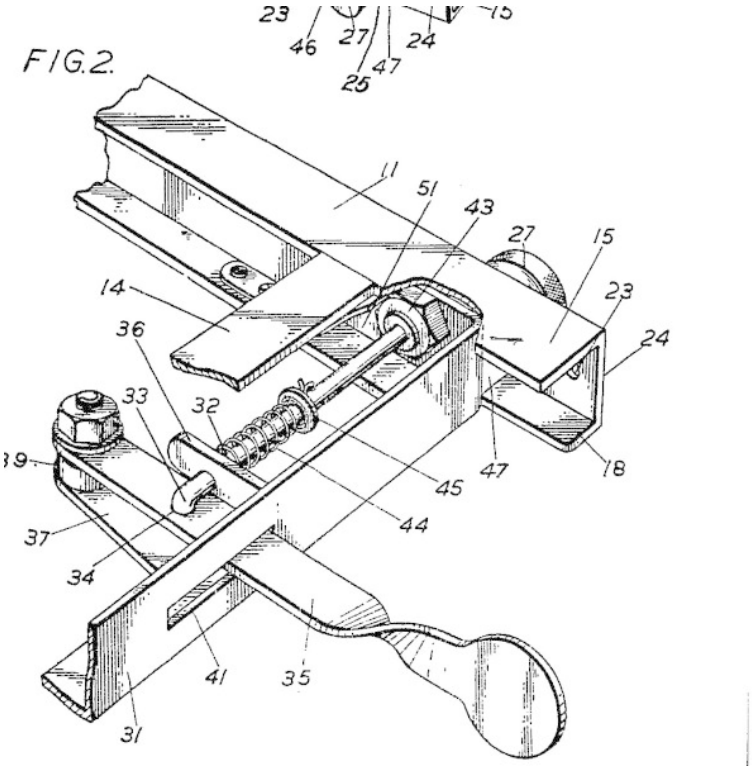

B60N 2/0875

{in a vertical direction}

Definition statement

This place covers:

Illustrative example of subject matter classified in this group.

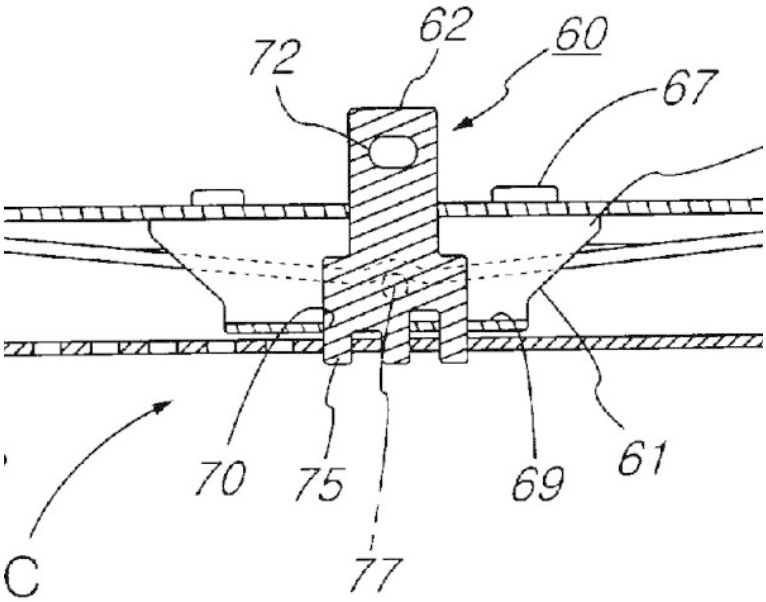

B60N 2/0887

{with synchronised movements}

Definition statement

This place covers:

Illustrative example of subject matter classified in this group.

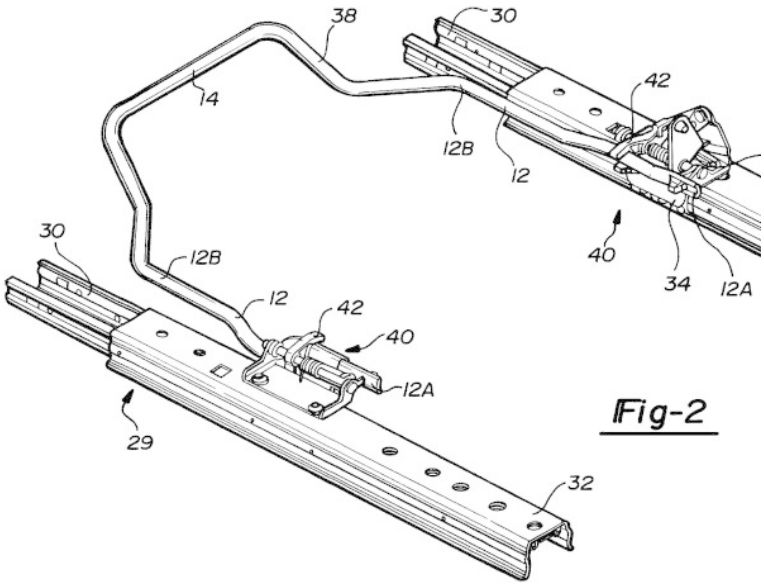

Fig-2

B60N 2/0893

{allowing independent movement of the latches, e.g. to recover tolerance errors}

Definition statement

This place covers:

Illustrative example of subject matter classified in this group.

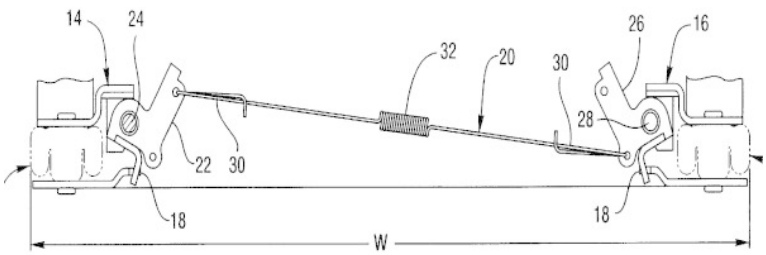

FIG. 2

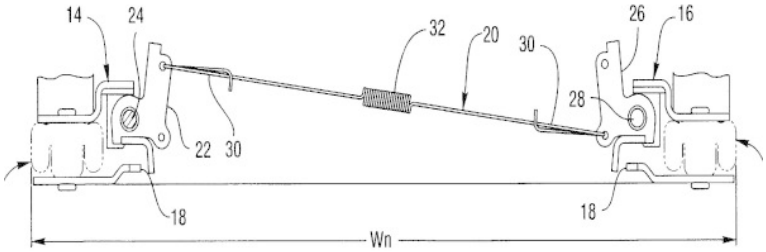

FIG. 3

B60N 2/10

tiltable {(B60N 2/2875 takes precedence)}

Definition statement

This place covers:

Seats which are tiltable as a whole unit.

Illustrative example of subject matter classified in this group.

References

Limiting references

This place does not cover:

seat being rotatable about an at least partly vertical axis	B60N 2/14
back-rest being tiltable	B60N 2/20
back-rest being adjustable	B60N 2/22

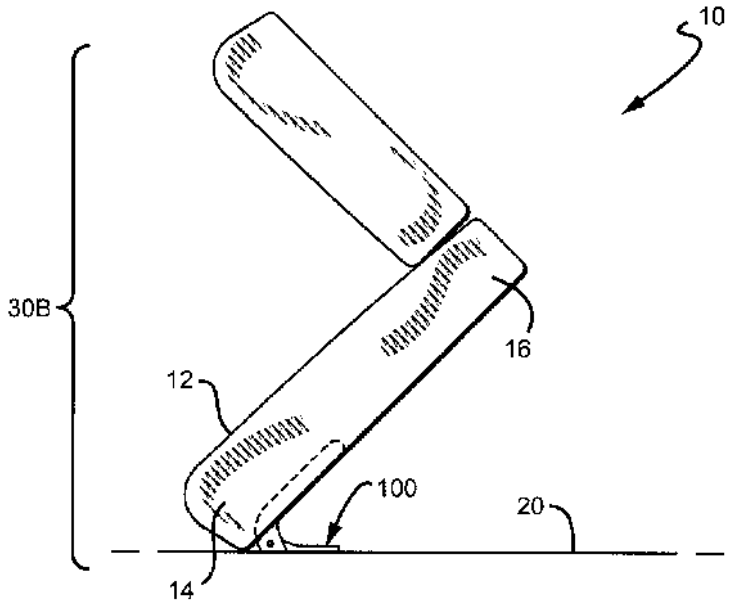

FIG. 2

B60N 2/12

slidable and tiltable

Definition statement

This place covers:

Seats when where the whole seat is slidable and the whole seat or a part of it e.g. back-rest is tiltable about a horizontal axle. In this group there are in particular seats with "easy access" position.

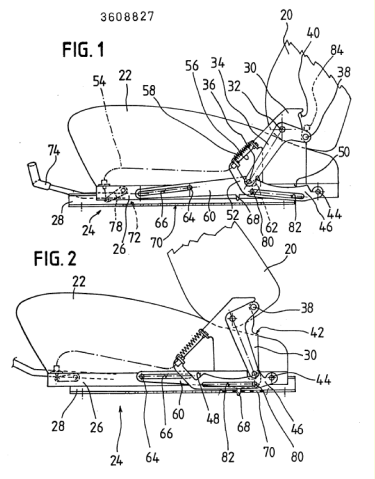

References

Limiting references

This place does not cover:

Seats where the backrest is tiltable or the inclination angle is adjustable, but where the seat is not slidable or where is no focus on the sliding of the seat.	B60N 2/20 , B60N 2/22

B60N 2/123

{and provided with memory locks}

Definition statement

This place covers:

Slidable and tiltable seats moving as a whole characterised by memory locks, see illustrative example of subject matter classified in this group.

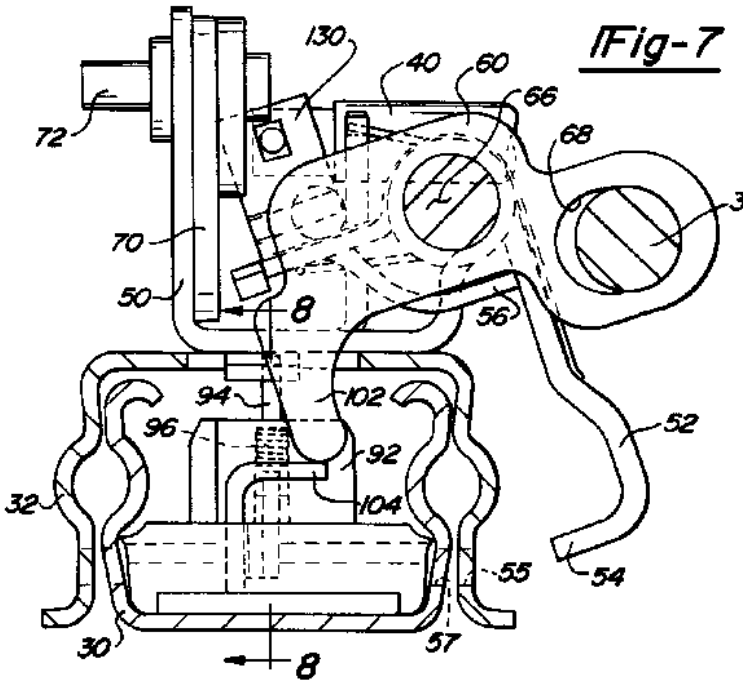

Glossary of terms

In this place, the following terms or expressions are used with the meaning indicated:

Memory lock	a lock mechanism which helps the user to get a seat which was moved from a first position to a second position back from the second position exactly to the first position

B60N 2/14

rotatable, e.g. to permit easy access {(B60N 2/2869 takes precedence)}

Definition statement

This place covers:

Illustrative example of subject matter classified in this group.

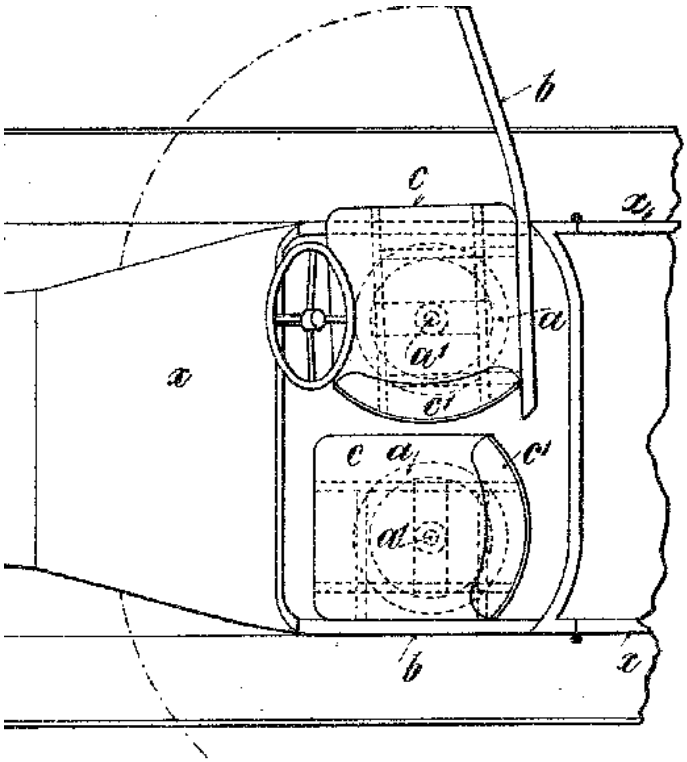

Glossary of terms

In this place, the following terms or expressions are used with the meaning indicated:

Easy access	easy access to the seat which is rotated (e.g. for children or handicapped people)

B60N 2/143

{taking a position opposite to the original one}

Definition statement

This place covers:

Illustrative example of subject matter classified in this group.

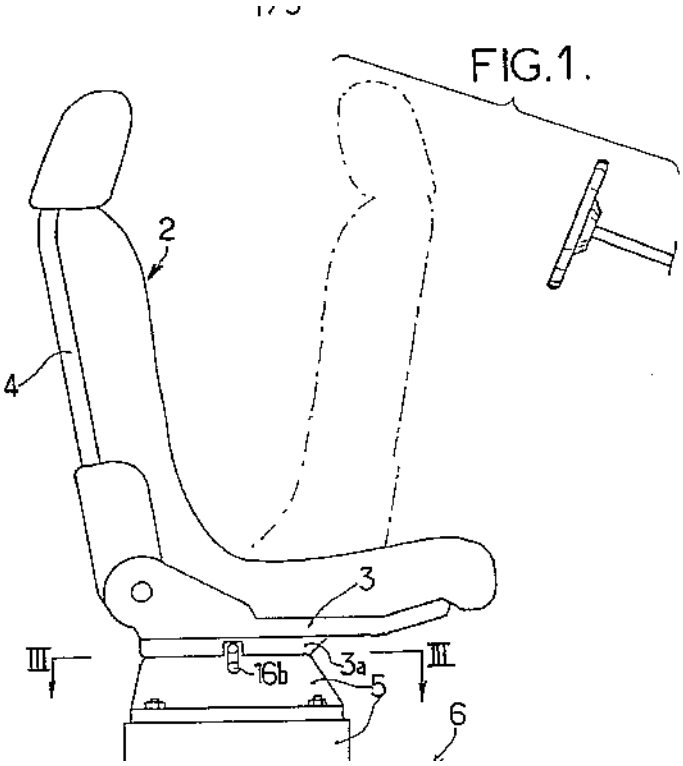

B60N 2/146

{characterised by the locking device}

Definition statement

This place covers:

Locking means between the seat and the base, e.g. the floor, in order to avoid rotation around the vertical axis of the seat.

Illustrative example of subject matter classified in this group.

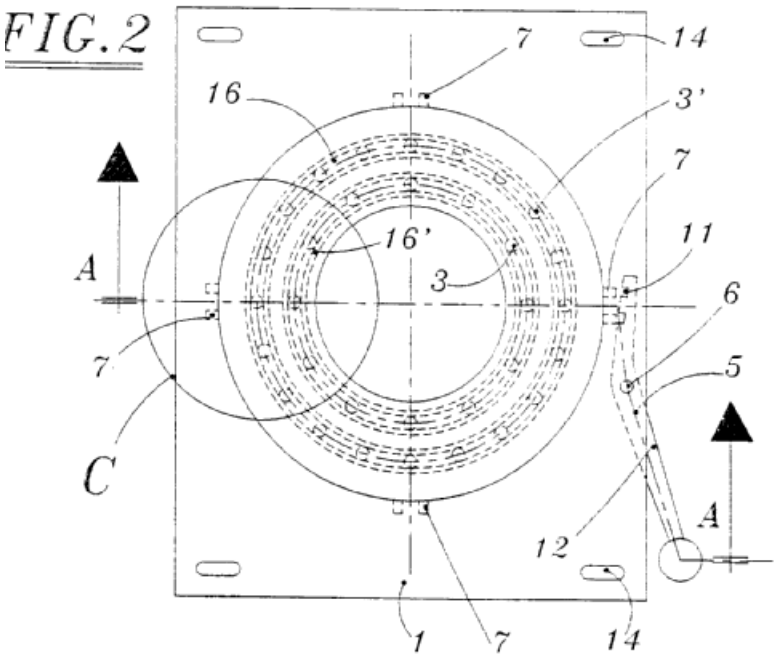

B60N 2/168

{and provided with braking systems}

Definition statement

This place covers:

Height-adjustable seats with special means for slowing down or stopping the up and down movement of the seat.

Illustrative example of subject matter classified in this group.

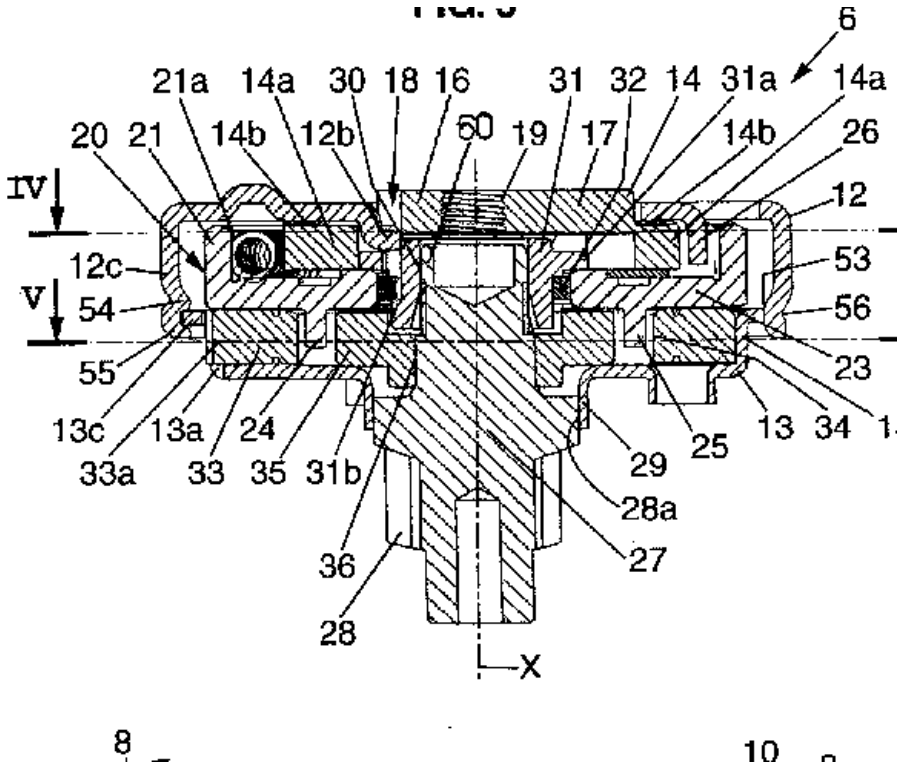

Relationships with other classification places

Devices where gear pawl-type mechanisms or latch and catch mechanisms form the only means to prevent rotational movement are not considered as brake mechanisms in this group and are classified in B60N 2/169. Locking means are classified in B60N 2/1685

B60N 2/169

{Stepwise movement mechanisms, e.g. ratchets (B60N 2/167 takes precedence; ratchets in general G05G 7/06)}

Definition statement

This place covers:

Illustrative example of subject matter classified in this group.

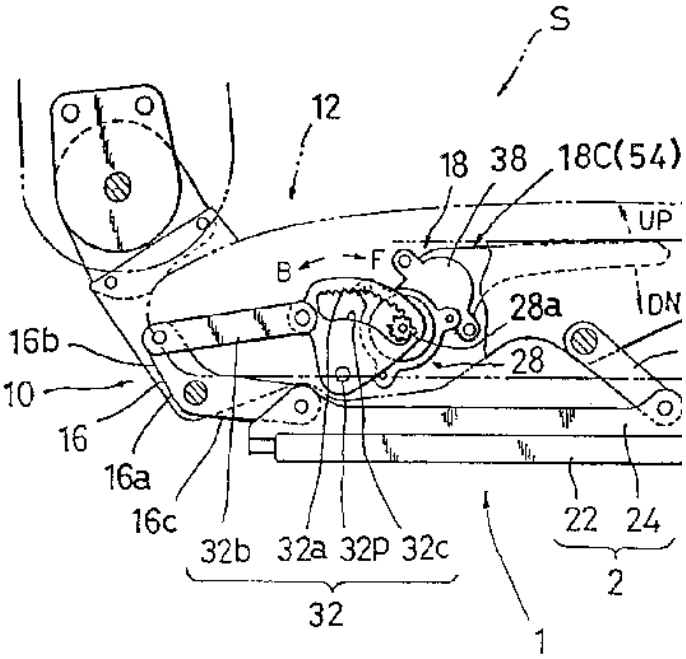

B60N 2/1889

{and provided with braking systems}

Relationships with other classification places

Devices where gear pawl-type mechanisms or latch and catch mechanisms form the only means to prevent rotational movement are not considered as brake mechanisms in this group and are classified in B60N 2/1896. Locking means are classified in B60N 2/1892.

B60N 2/20

the back-rest being tiltable, e.g. to permit easy access ({B60N 2/0224} , B60N 2/04, B60N 2/22, {B60N 2/3002} take precedence)

Glossary of terms

In this place, the following terms or expressions are used with the meaning indicated:

Back-rest being tiltable	back-rest tiltable about a substantially horizontal axle
Easy access	easy access to the seats behind the one of which the back-rest is tilted

B60N 2/203

{taking a position opposite to the original one}

Definition statement

This place covers:

Illustrative example of subject matter classified in this group.

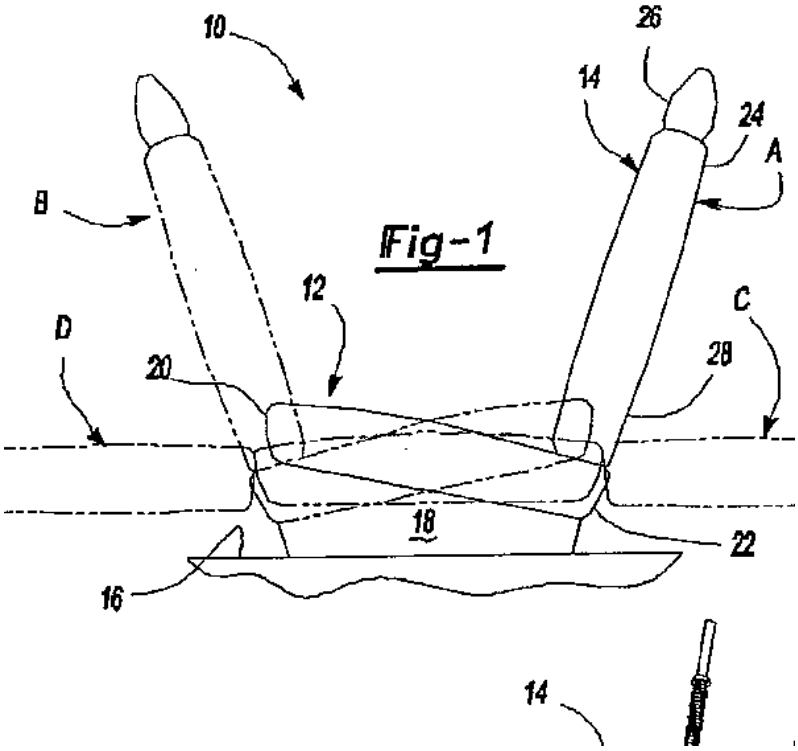

B60N 2/206

{to a position in which it can be used as a support for objects, e.g. as a tray}

Definition statement

This place covers:

Illustrative example of subject matter classified in this group.

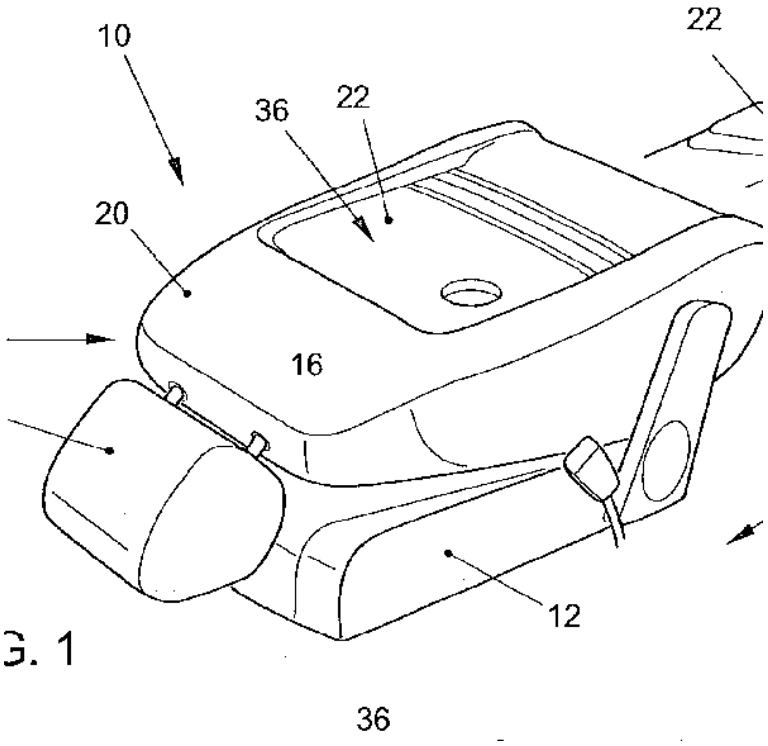

B60N 2/2209

{by longitudinal displacement of the cushion, e.g. back-rest hinged on the bottom to the cushion and linked on the top to the vehicle frame}

Definition statement

This place covers:

Illustrative example of subject matter classified in this group.

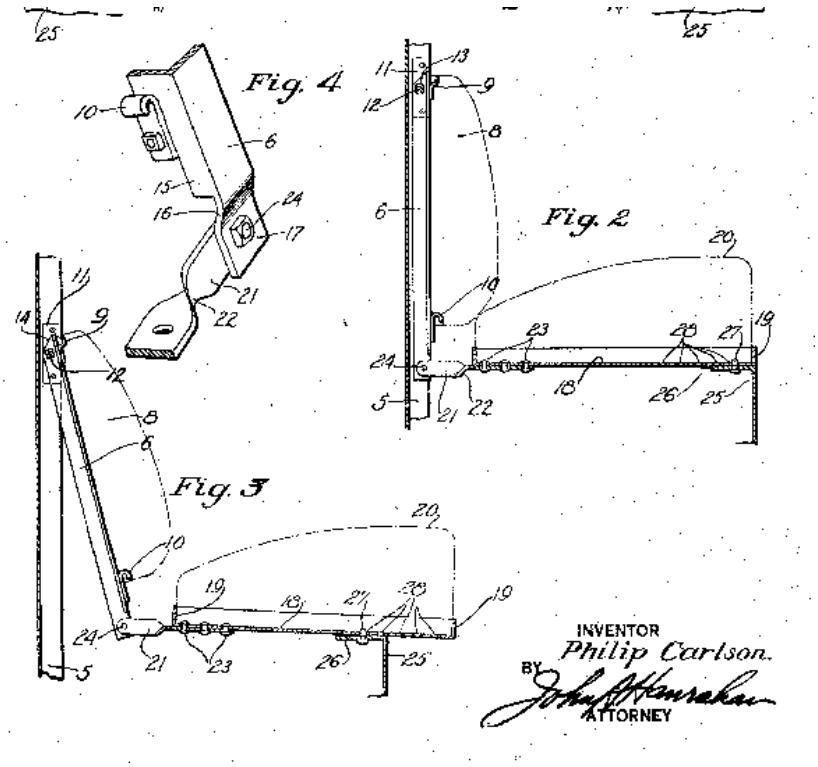

B60N 2/2213

{Gear wheel driven mechanism (B60N 2/2231, B60N 2/225 take precedence)}

Definition statement

This place covers:

Mechanisms comprising gear wheels for adjustingthe back-rest.

Illustrative examples of subject matter classified in this group.

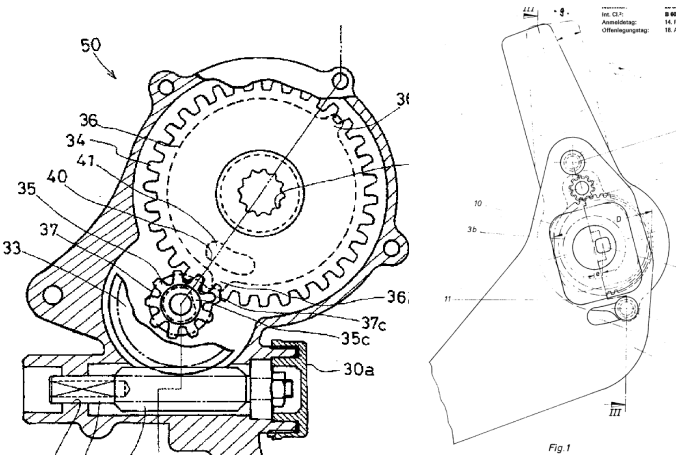

B60N 2/2218

{Transversally moving locks}

Definition statement

This place covers:

Illustrative example of subject matter classified in this group.

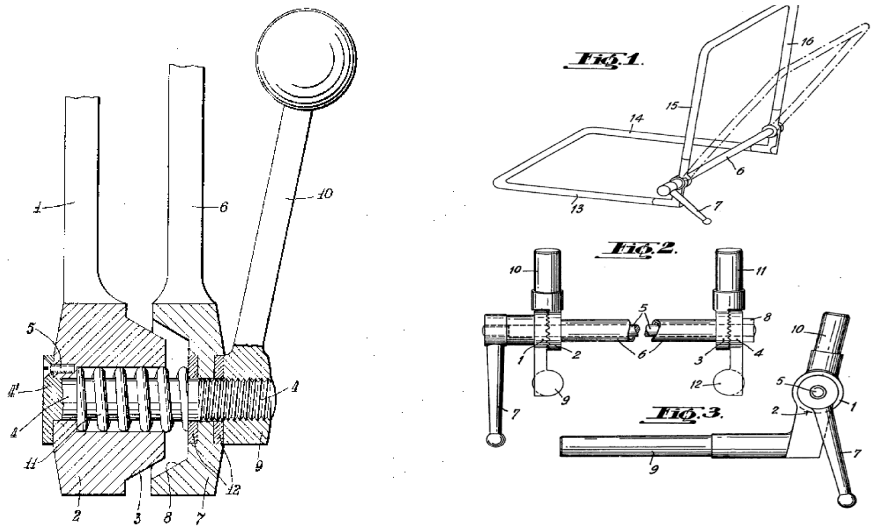

B60N 2/2222

{the back-rest having two or more parts}

Definition statement

This place covers:

Seat backs which are in themselves (not considering the headrest) divided in a plurality of parts e.g. to improve the ergonomics

Illustrative example of subject matter classified in this group.

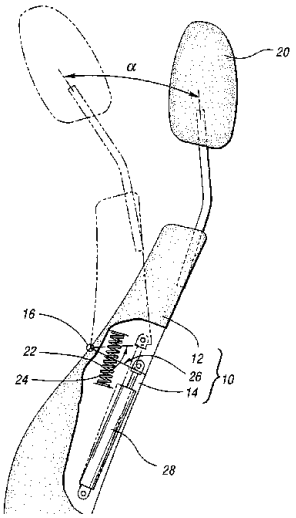

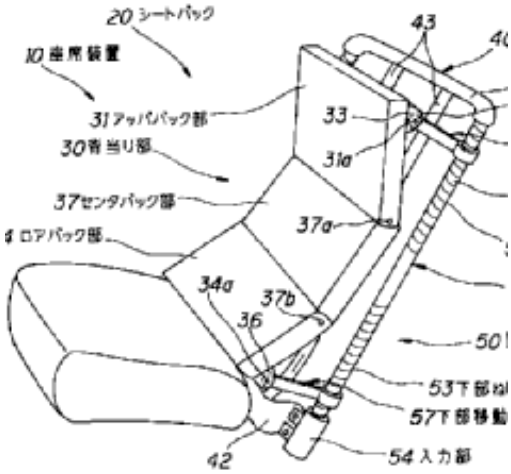

B60N 2/2227

{and provided with braking systems}

Definition statement

This place covers:

Devices for blocking movement of the back-rest by friction. Example figure shows friction brake therefore:

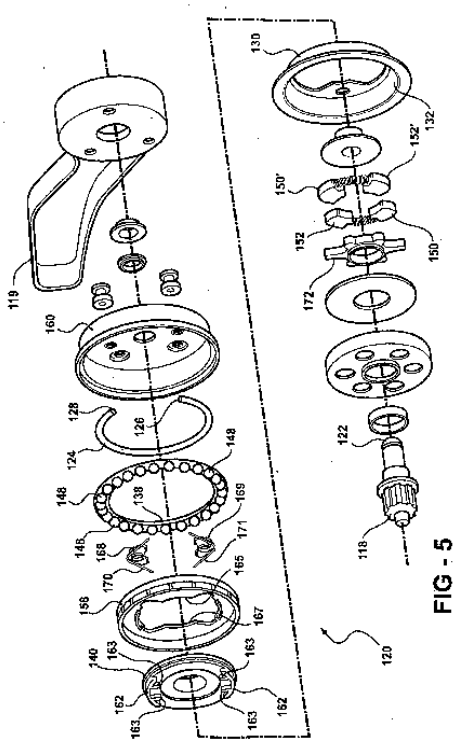

FIG - 5

Relationships with other classification places

Devices where gear pawl-type mechanisms or latch and catch mechanisms form the only means to prevent rotational movement are not considered as brake mechanisms in this group and are classified

in B60N 2/235 or subgroups thereof. Latch or catch mechanisms are classified if appropriate in B60N 2/2218 or B60N 2/224.

B60N 2/2231

{Worm and worm gear articulations}

Definition statement

This place covers:

Illustrative example of subject matter classified in this group.

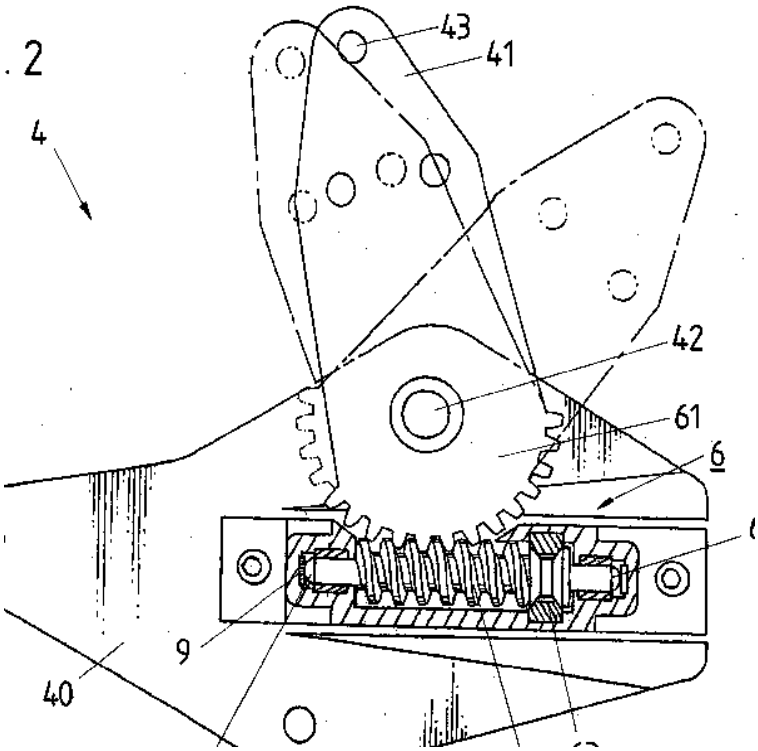

B60N 2/2236

{with a transversal pin displaced by a slot or a cam along a predetermined path}

Definition statement

This place covers:

Illustrative example of subject matter classified in this group.

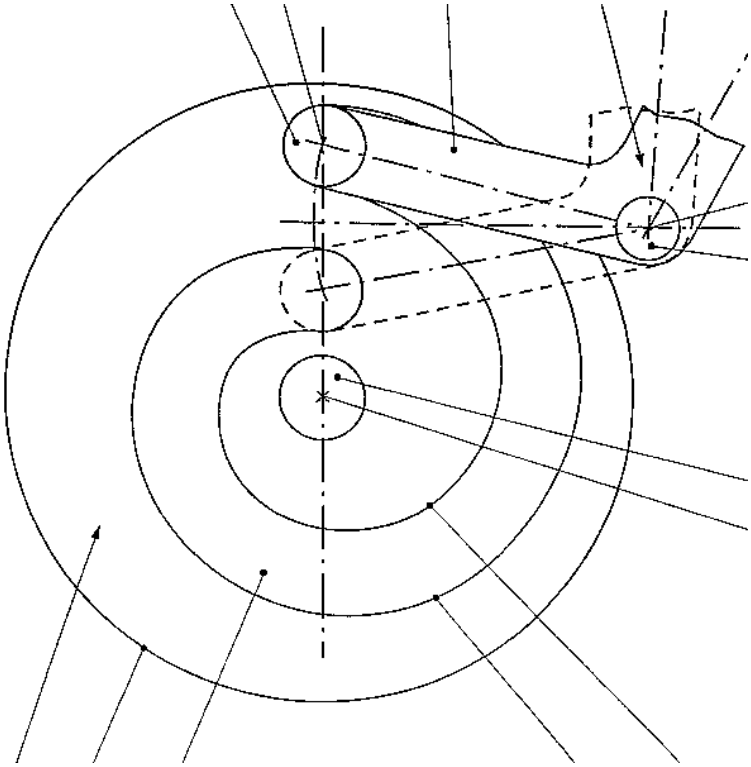

B60N 2/224

{Stepwise movement mechanisms, e.g. ratchets (ratchets in general G05G 7/06)}

Definition statement

This place covers:

Mechanisms comprising rachets or freewheeling members for moving an adjustable back-rest.

Illustrative example of subject matter classified in this group.

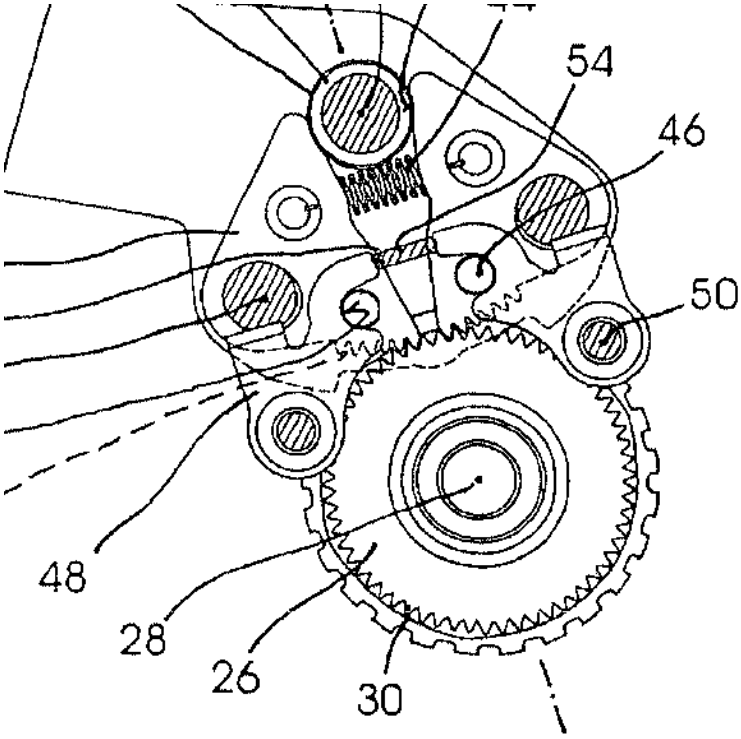

References

Informative references

Attention is drawn to the following places, which may be of interest for search:

Gearings with freewheeling members in general	F16H 31/001
Control mechanisms producing increments of movement, e.g. by ratchets in general	G05G 7/06

B60N 2/2245

{provided with a lock mechanism on the upper part of the back-rest}

Definition statement

This place covers:

Seats with locking means at the upper end of the backrest (e.g. connecting the backrest to the car body) with additional option of adjustment of the reclining angle of the back-rest.

References

Informative references

Attention is drawn to the following places, which may be of interest for search:

Seats with locking means at the upper end of the backrest for holding the back-rest in a loading platform	B60N 2/366

B60N 2/2251

{with gears having orbital motion, e.g. sun and planet gears (in general F16H 1/28)}

Definition statement

This place covers:

Illustrative example of subject matter classified in this group.

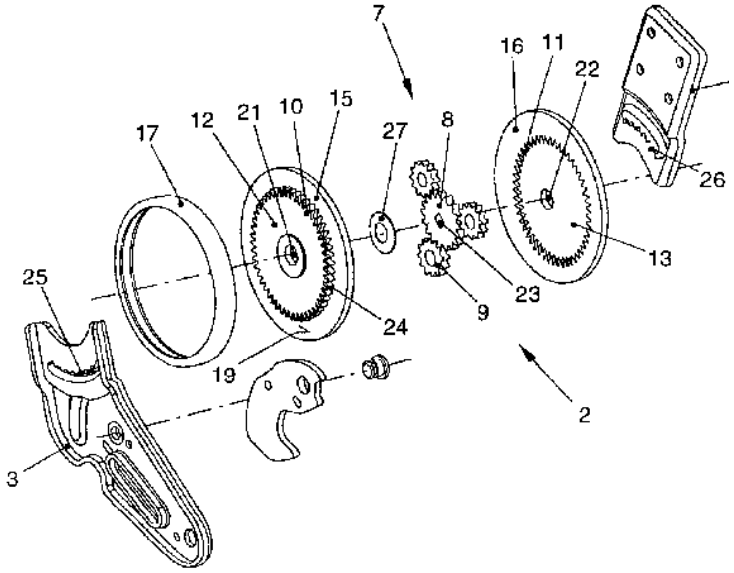

FIG. 2

B60N 2/2252

{in which the central axis of the gearing lies inside the periphery of an orbital gear, e.g. one gear without sun gear (in general F16H 1/32)}

Definition statement

This place covers:

Illustrative example of subject matter classified in this group.

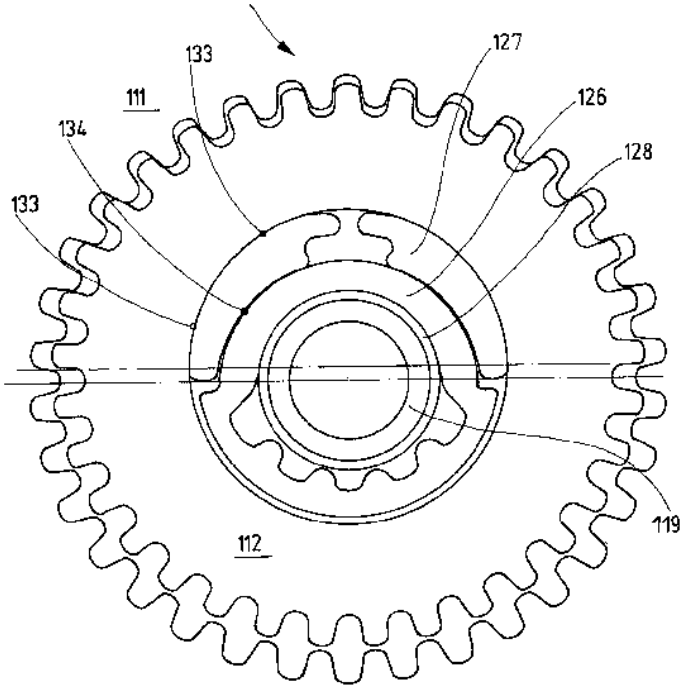

Synonyms and Keywords

In patent documents, the following words/expressions are often used as synonyms:

- "wobble mechanism", "wobble joint fitting" and in Deutsch: "Taumelgetriebe"

B60N 2/2254

{provided with braking systems}

Definition statement

This place covers:

Adjustable back-rests with cycloidal or planetary gear mechanisms and braking means, see illustrative example of brake device therefore:

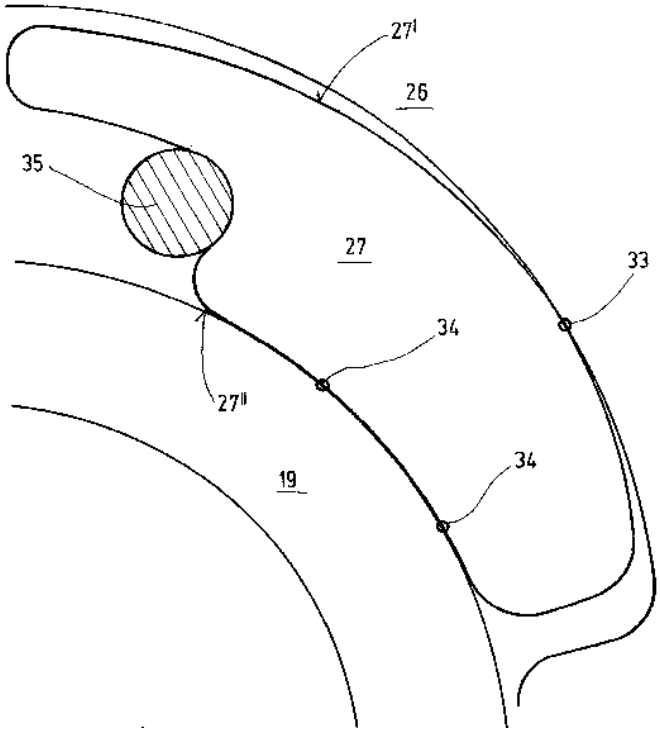

B60N 2/2255

{with coiled springs}

Definition statement

This place covers:

Adjustable back-rests with cycloidal or planetary gear mechanisms using braking systems with a coiled spring which is located between the rotating elements and which can be activated and unactivated in order to produce a frictional engagement between the rotating elements.

Illustrative example of subject matter classified in this group.

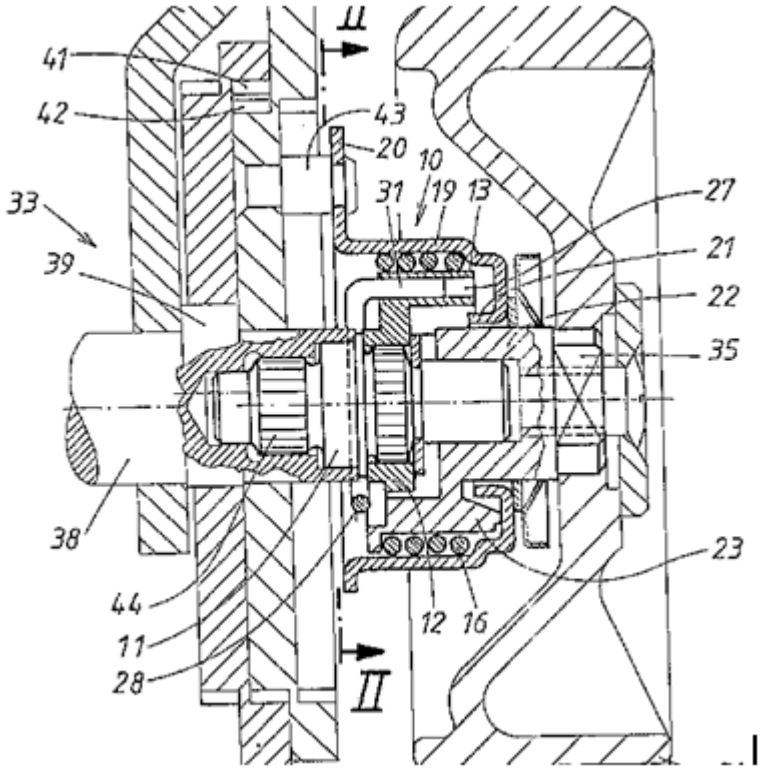

B60N 2/2257

{with rollers or balls}

Definition statement

This place covers:

Adjustable back-rests with cycloidal or planetary gear mechanisms using braking systems with rollers which are located between the rotating elements and which can be activated and unactivated in order to produce a frictional engagement between the rotating elements.

Illustrative example of subject matter classified in this group.

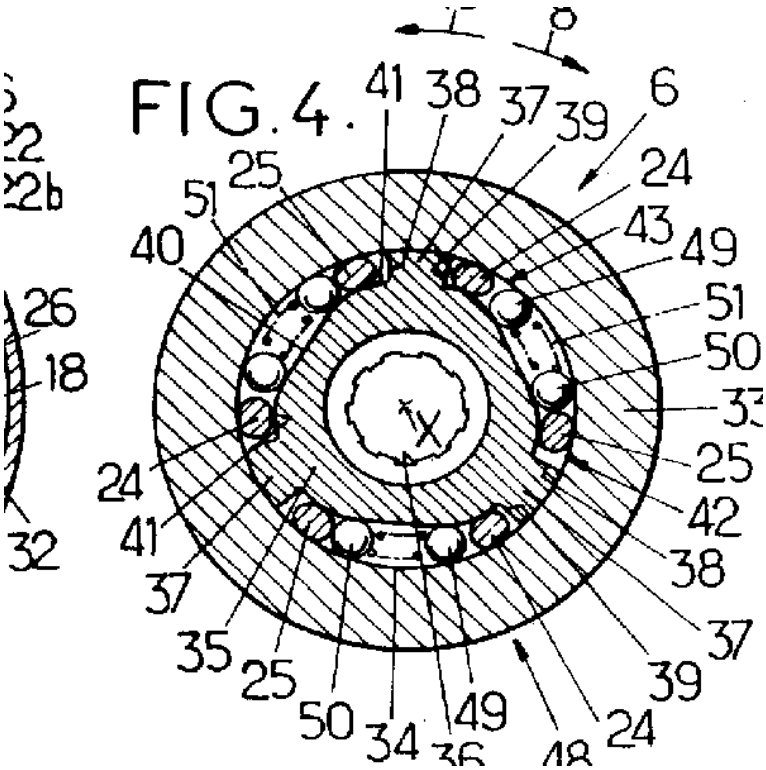

B60N 2/2258

{with ratchets}

Definition statement

This place covers:

Adjustable back-rests with cycloidal or planetary gear mechanisms chararcterised by using ratchets between the rotating parts, e.g. illustrative second example with outer disk (12) mounted to back-rest and disk (11) mouted to seat cushion.

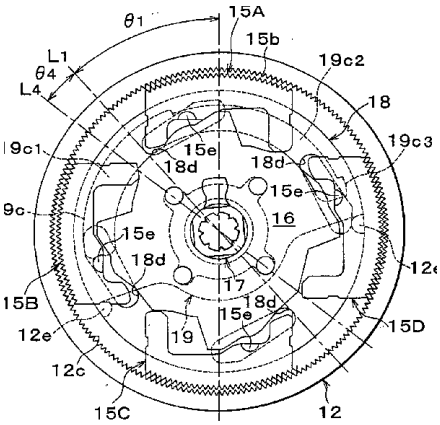

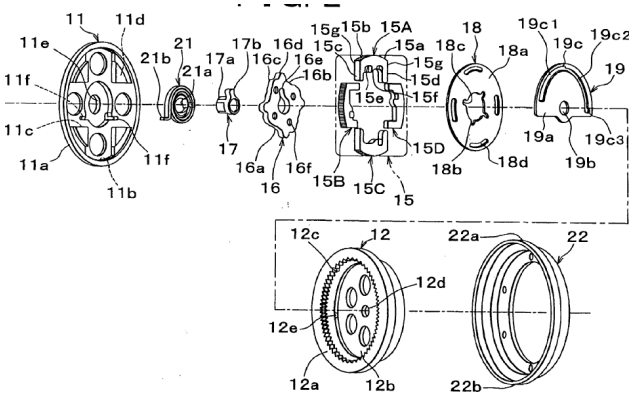

B60N 2/23

by {linear actuators, e.g.} linear screw mechanisms

Definition statement

This place covers:

Back-rest adjustments characterised by linear acutators, e.g. linear screw mechanisms, see illustrative example of subject matter classified in this group.

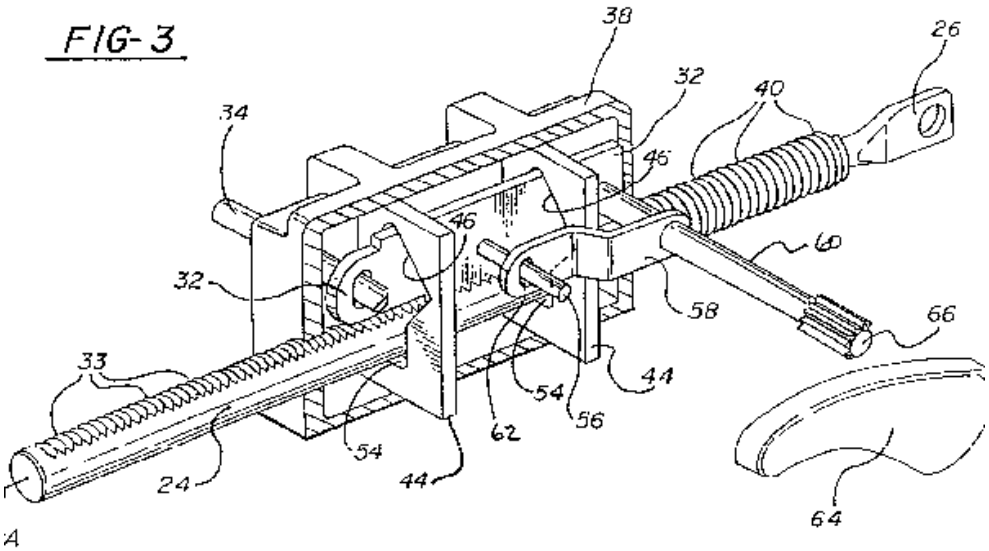

B60N 2/231

{by hydraulic actuators}

Definition statement

This place covers:

Illustrative example of subject matter classified in this group.

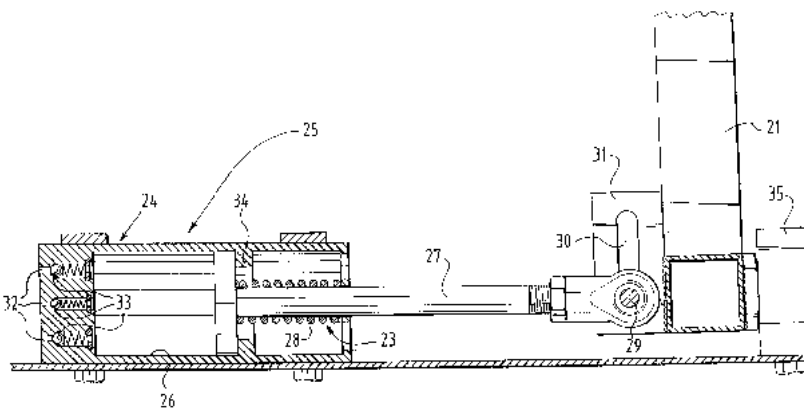

FIG. 7

B60N 2/232

{provided with memory locks}

Definition statement

This place covers:

Illustrative example of subject matter classified in this group.

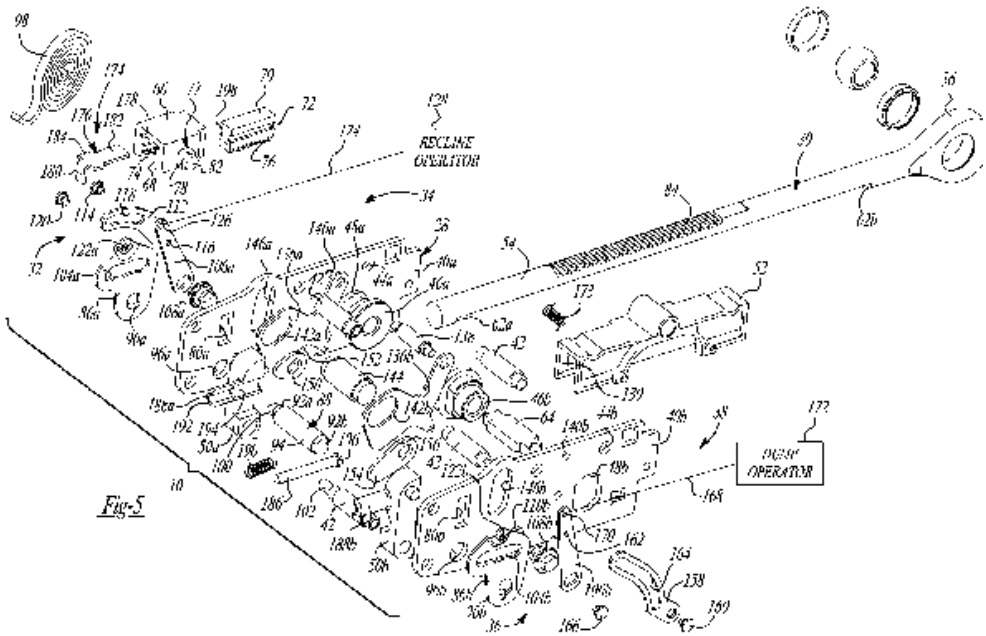

B60N 2/233

{by linear screw mechanisms}

Definition statement

This place covers:

Illustrative example of subject matter classified in this group.

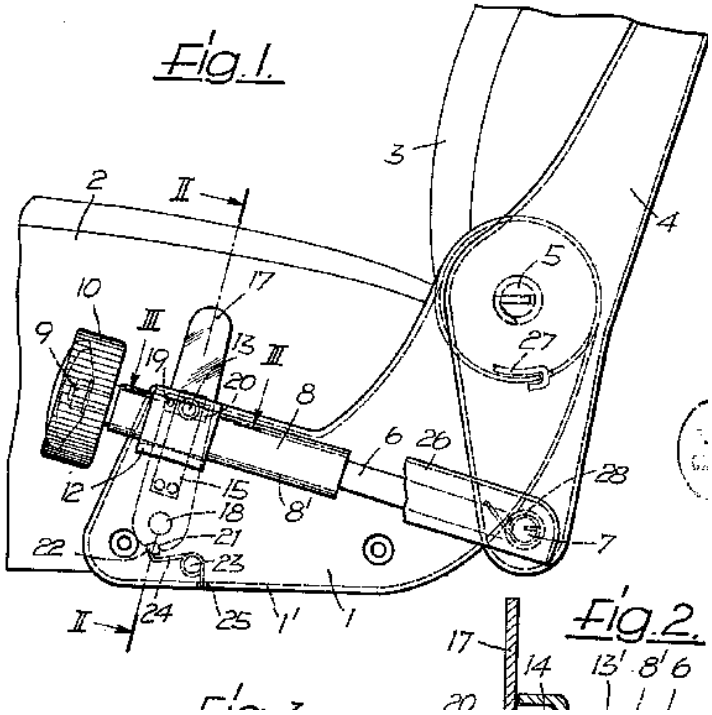

B60N 2/2352

{with external pawls}

Definition statement

This place covers:

Back-rest being adjustable by an external pawl. The illustrative example of subject matter classified in this group shows the pivoting axis (3) of a back-rest which is connected with segment (4) having teeth (4a) to be engaged by the pawl (7) for adjusting the back-rest.

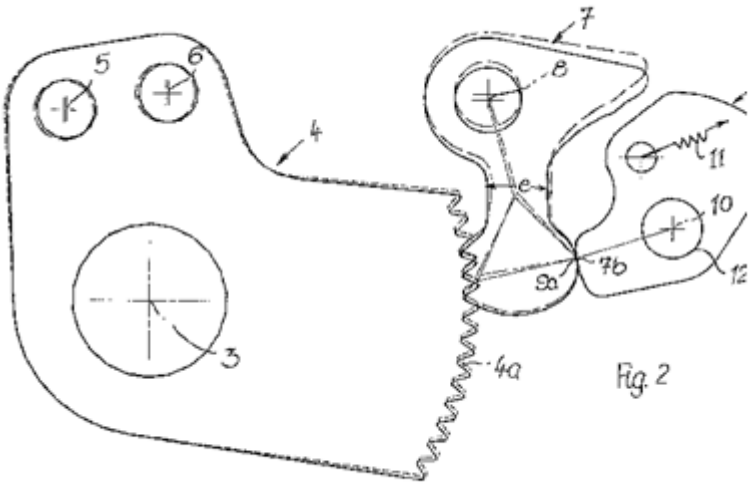

B60N 2/2354

{and provided with memory locks}

Definition statement

This place covers:

Illustrative example of subject matter classified in this group.

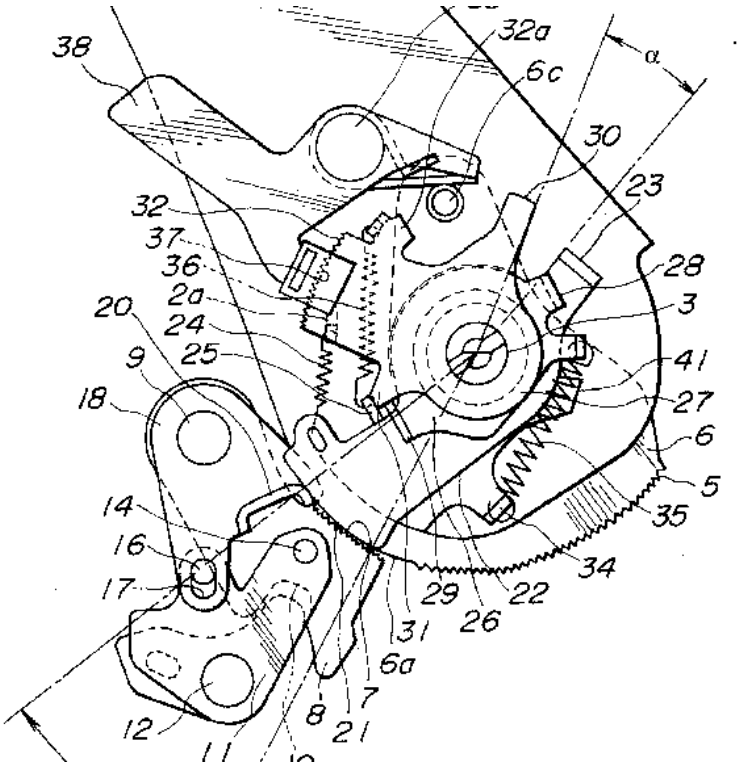

B60N 2/2356

{with internal pawls}

Definition statement

This place covers:

Illustrative example of subject matter classified in this group.

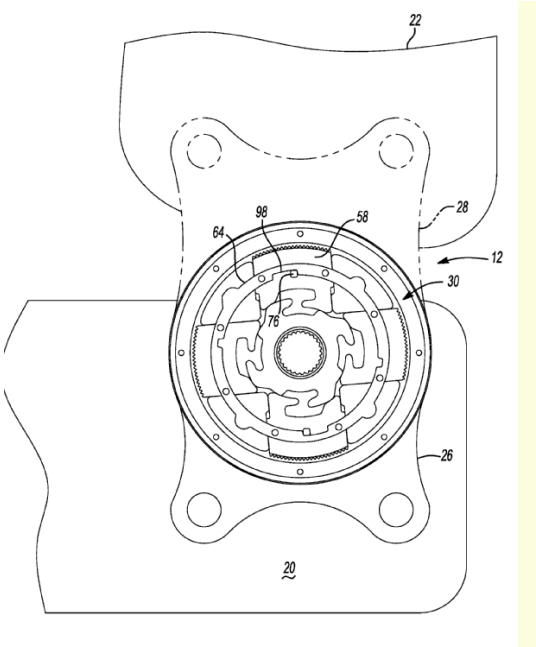

B60N 2/24

for particular purposes or particular vehicles

Definition statement

This place covers:

Seats as set out in the titles of the groups B60N 2/24 - B60N 2/433 and furthermore vehicles which are not used as regular passenger cars e.g. military and construction vehicle

B60N 2/242

{Bus seats}

Definition statement

This place covers:

Illustrative example of subject matter classified in this group.

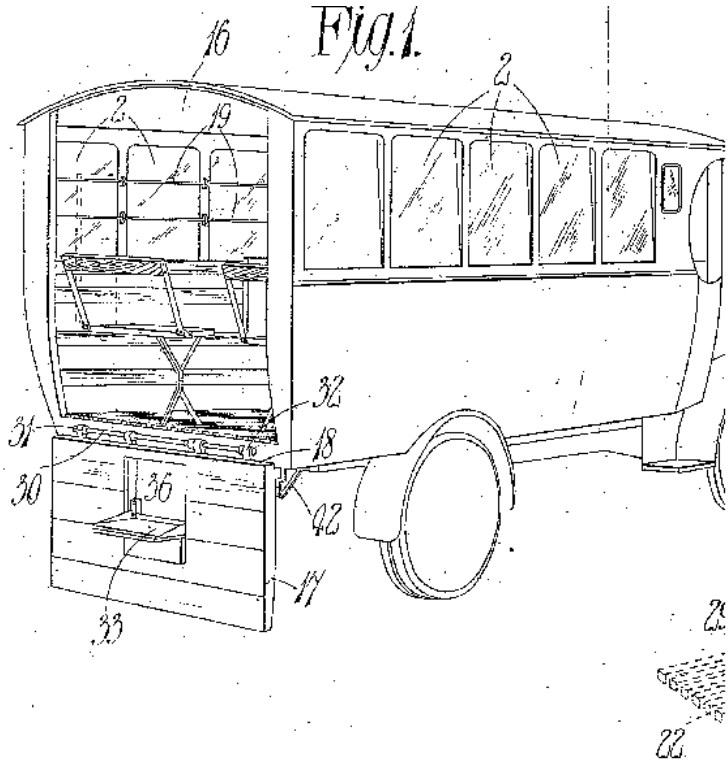

B60N 2/245

{for handicapped persons (facilitating access or loading of wheelchairs in ambulances A61G 3/00)}

Definition statement

This place covers:

Illustrative example of subject matter classified in this group.

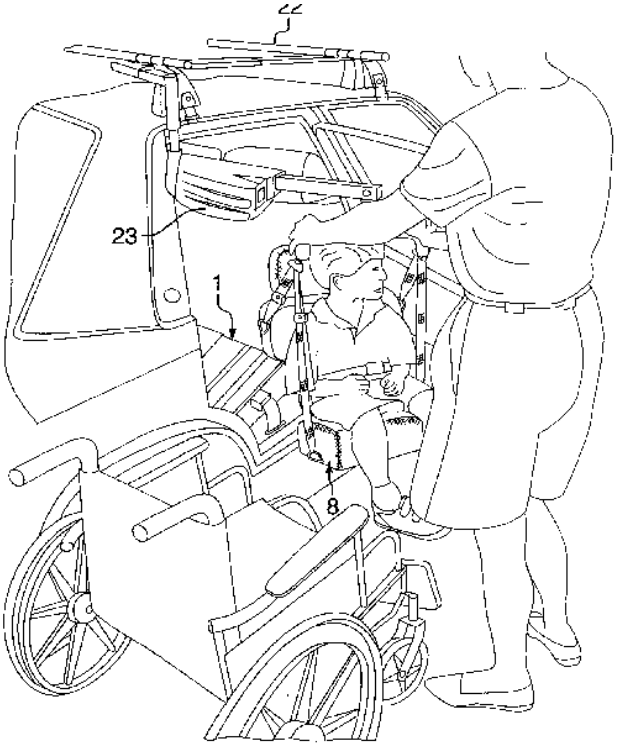

B60N 2/26

for children (B60N 2/30 takes precedence)

Definition statement

This place covers:

Illustrative example of subject matter classified in this group.

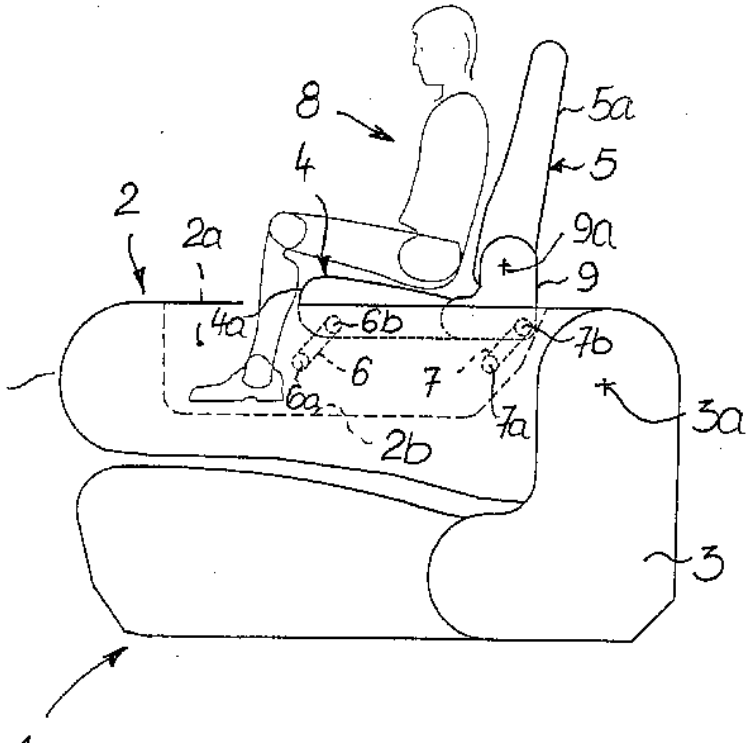

B60N 2/265

{Adaptations for seat belts}

Definition statement

This place covers:

Illustrative example of subject matter classified in this group.

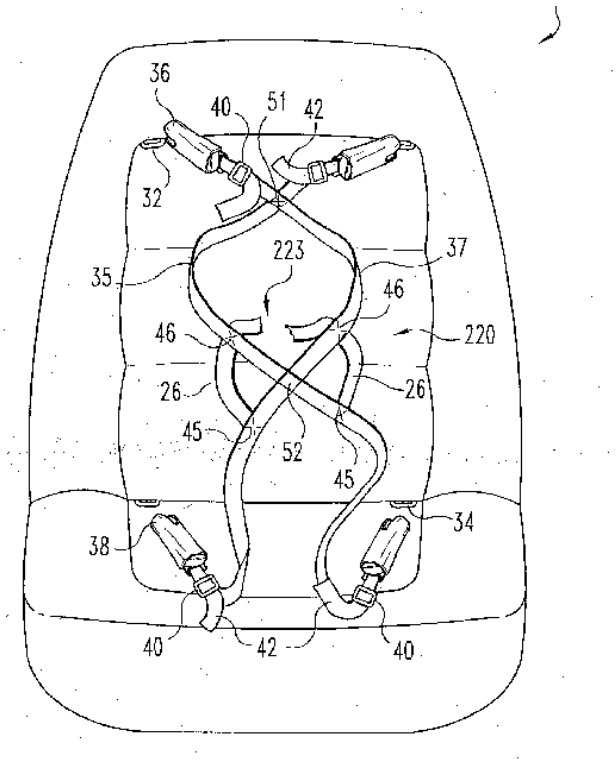

B60N 2/2803

{Adaptations for seat belts (seat belts for children in general B60R 22/105)}

Definition statement

This place covers:

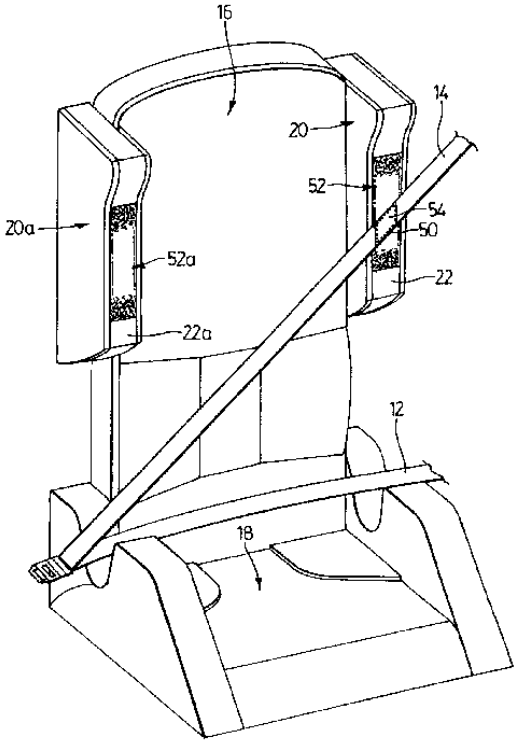

B60N 2/2806

{securing the child seat to the vehicle}

Definition statement

This place covers:

Illustrative example of subject matter classified in this group.

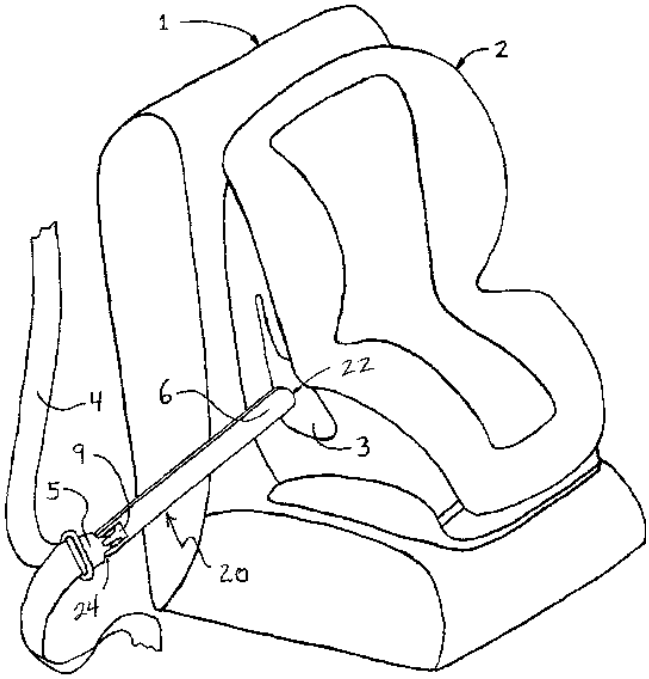

B60N 2/2809

{with additional tether connected to the top of the child seat and passing above the top of the back-rest}

Definition statement

This place covers:

Illustrative example of subject matter classified in this group.

Fig.10.

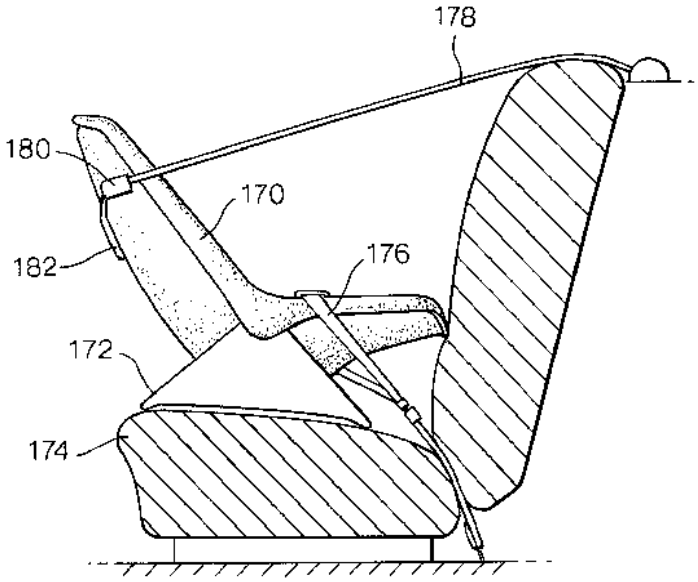

B60N 2/2812

{securing the child to the child seat}

Definition statement

This place covers:

Illustrative example of subject matter classified in this group.

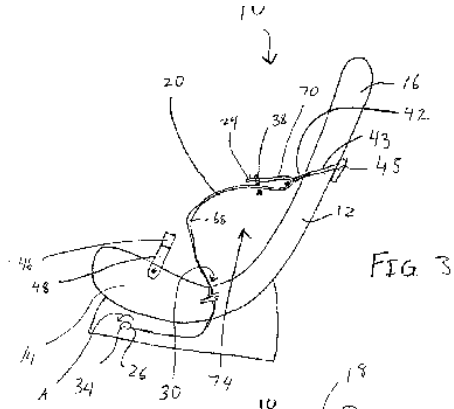

FIG. 3

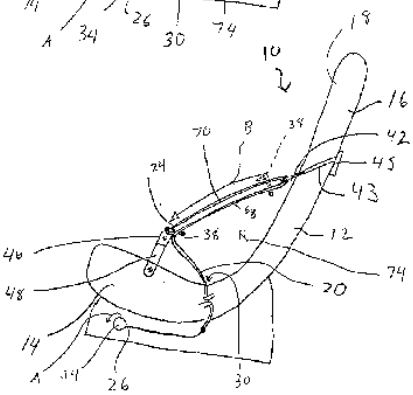

FIG. 4

B60N 2/2824

{part of the base being supported by the vehicle frame (B60N 2/289 takes precedence)}

Definition statement

This place covers:

Illustrative example of subject matter classified in this group.

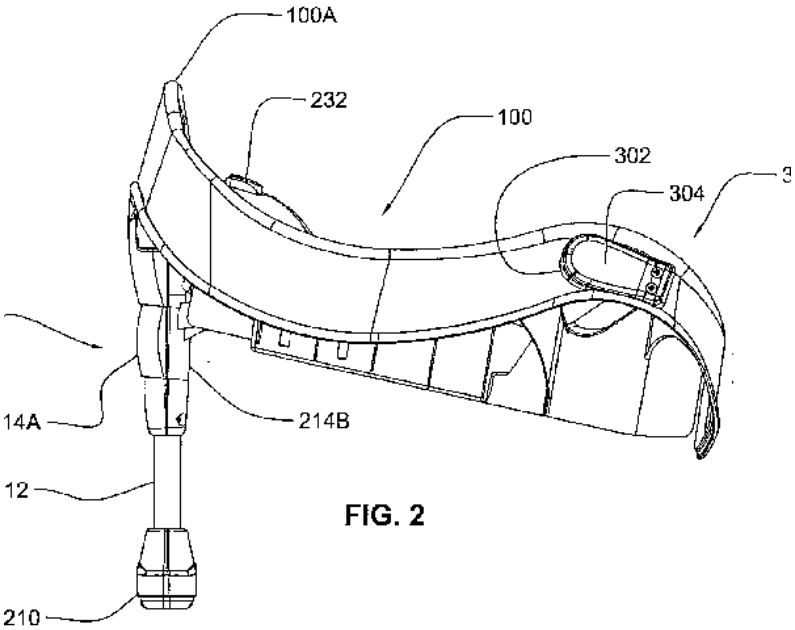

FIG. 2

B60N 2/2827

{part of the base being supported by the seat sub-frame (B60N 2/2893 takes precedence)}

Definition statement

This place covers:

Illustrative example of subject matter classified in this group.

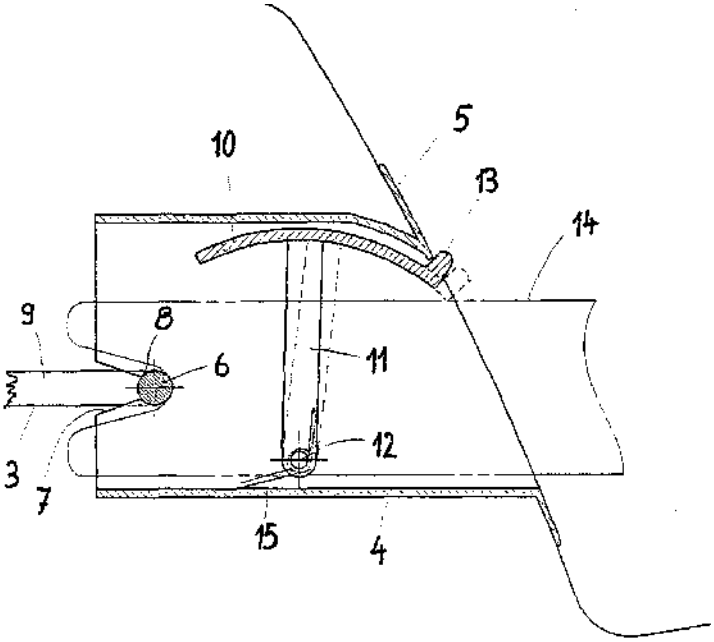

Fig.3

B60N 2/2833

{back-rest suspended}

Definition statement

This place covers:

Illustrative example of subject matter classified in this group.

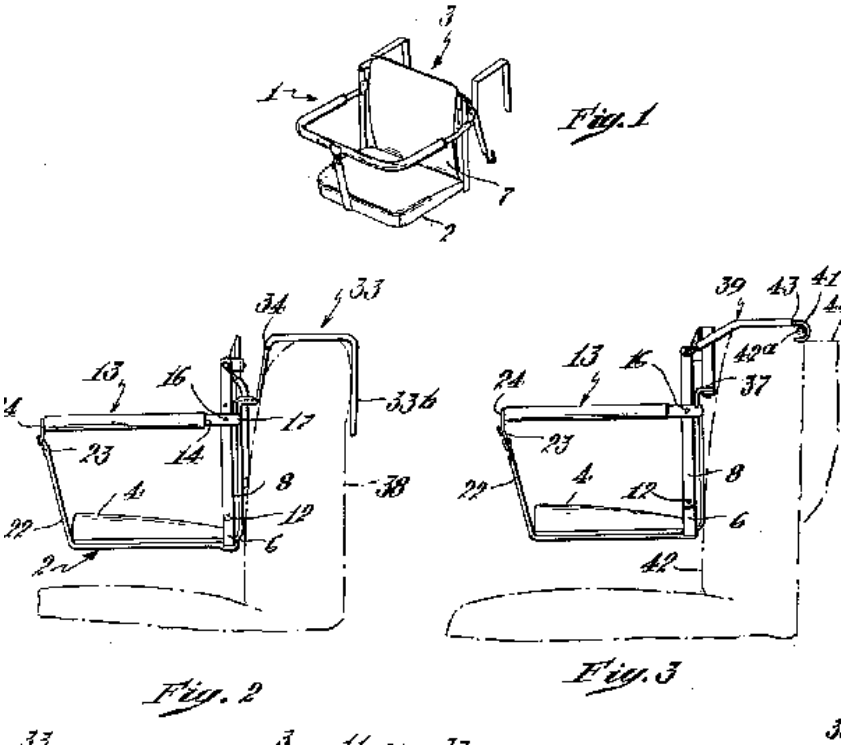

B60N 2/2836

{window-frame suspended}

Definition statement

This place covers:

Illustrative example of subject matter classified in this group.

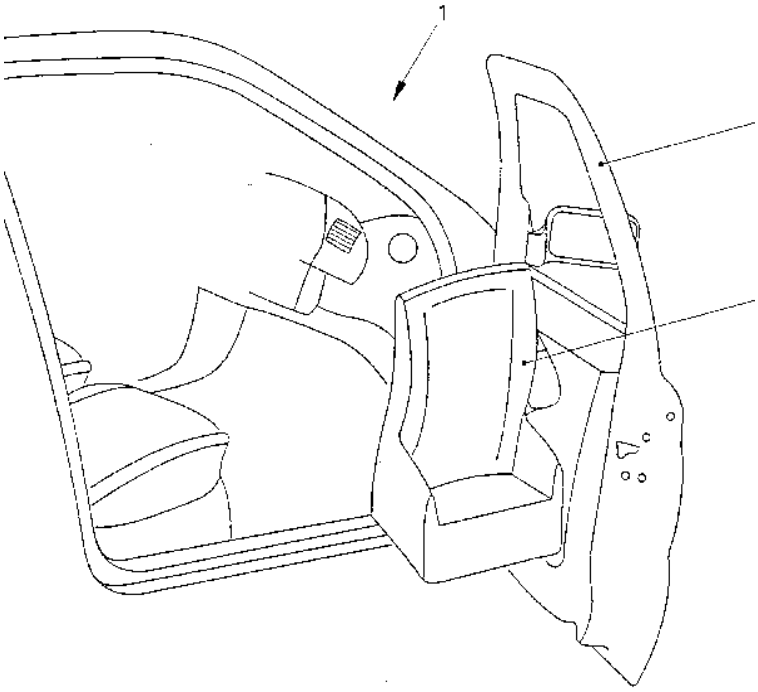

B60N 2/2839

{having a front guard or barrier}

Definition statement

This place covers:

Illustrative example of subject matter classified in this group.

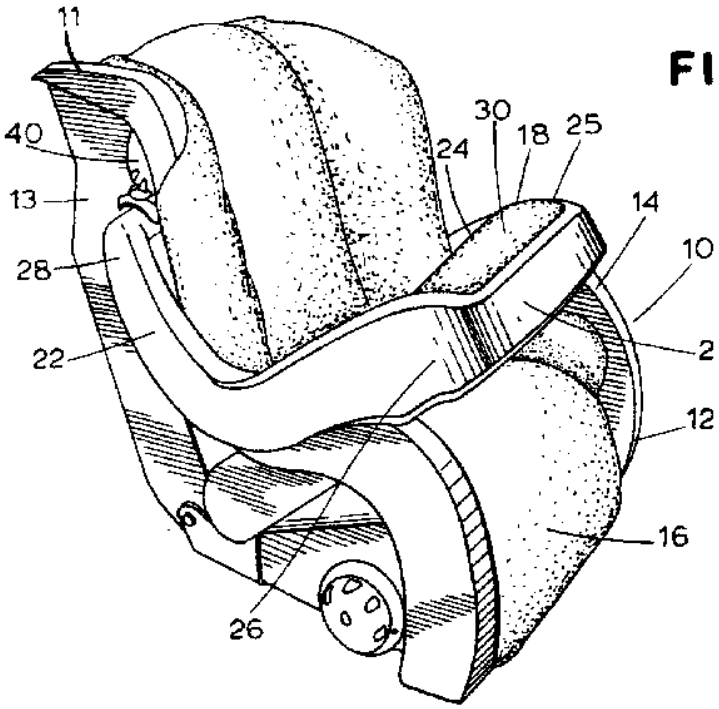

B60N 2/2842

{adapted to carry the child, when dismounted from the vehicle}

Definition statement

This place covers:

Illustrative example of subject matter classified in this group.

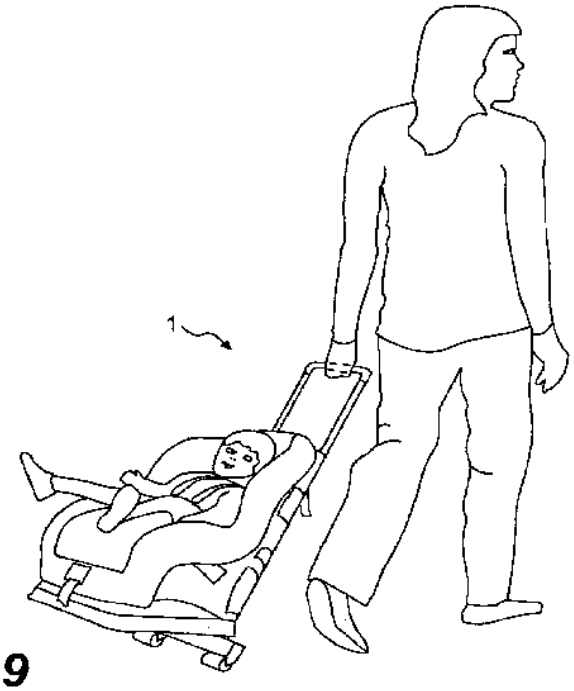

FIG. 9

B60N 2/2845

{having handles}

Definition statement

This place covers:

Illustrative example of subject matter classified in this group.

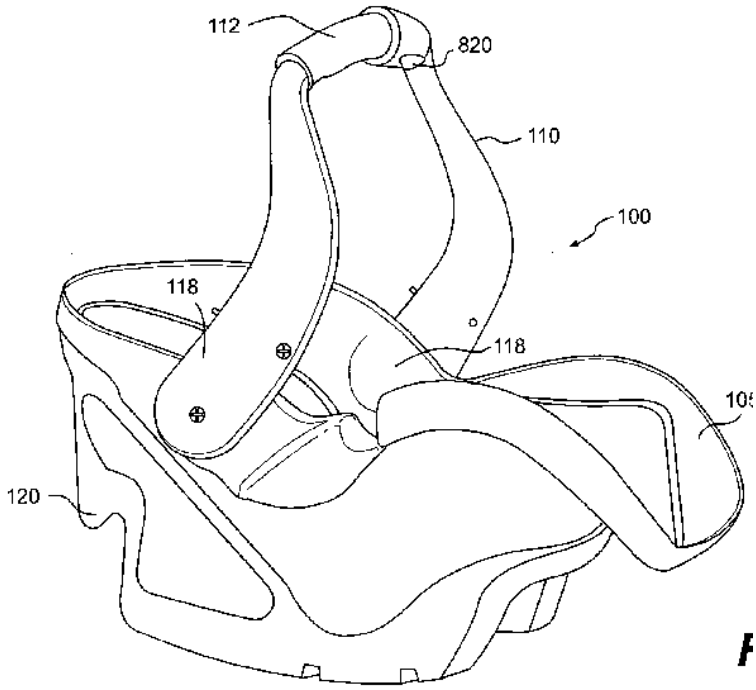

B60N 2/2848

{being convertible or adaptable ro a preambulator, e.g. a baby-carriage or a push-chair (preambulators in general B62B 7/14)}

Definition statement

This place covers:

Illustrative example of subject matter classified in this group.

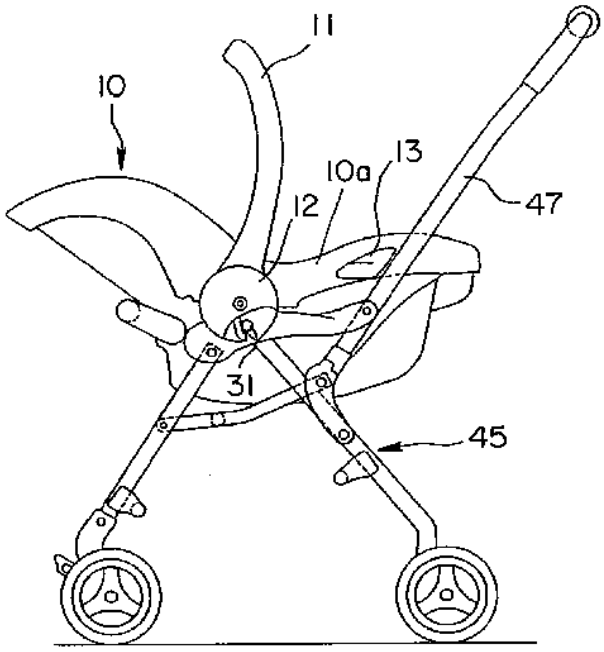

B60N 2/286

{forward facing (B60N 2/2866 takes precedence)}

Definition statement

This place covers:

Illustrative example of subject matter classified in this group.

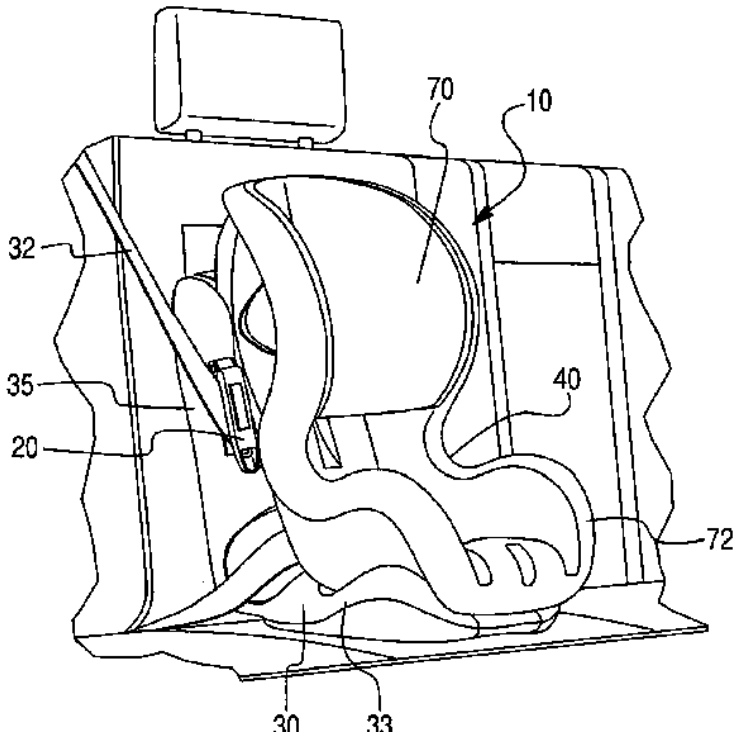

B60N 2/2863

{backward facing}

Definition statement

This place covers:

Illustrative example of subject matter classified in this group.

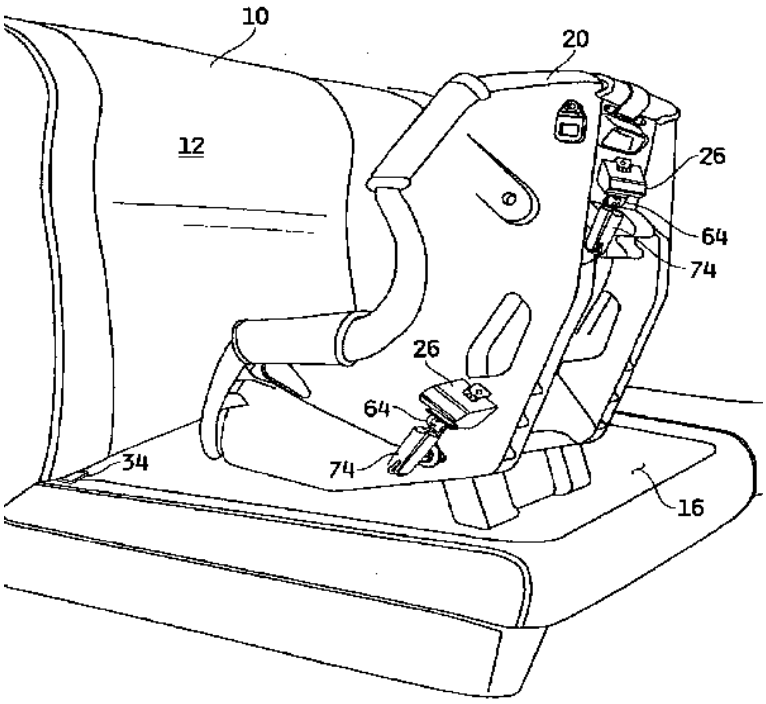

B60N 2/2866

{booster cushions, e.g. to lift a child to allow proper use of the conventional safety belts}

Definition statement

This place covers:

Cushions without back-rest parts to lift the child in position to allow the use of convential safety belts.

Illustrative example of subject matter classified in this group.

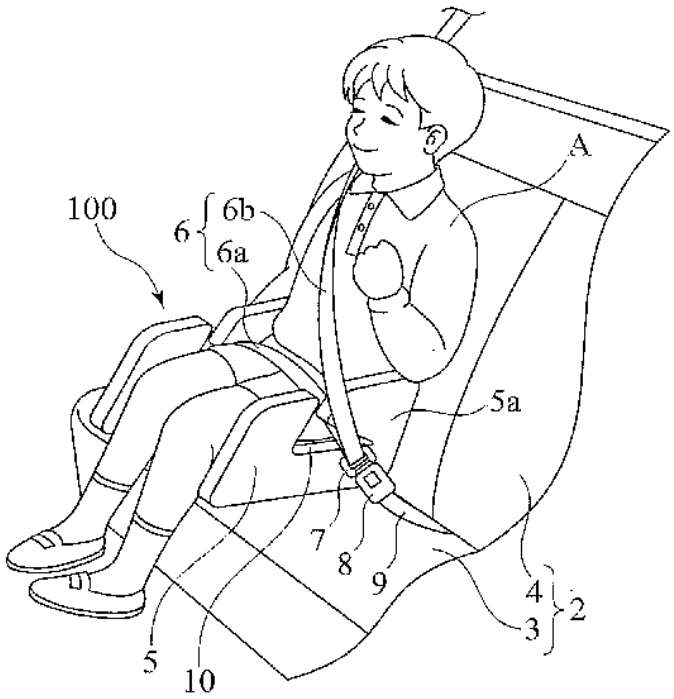

B60N 2/2869

{rotatable about a vertical axis}

Definition statement

This place covers:

Illustrative example of subject matter classified in this group.

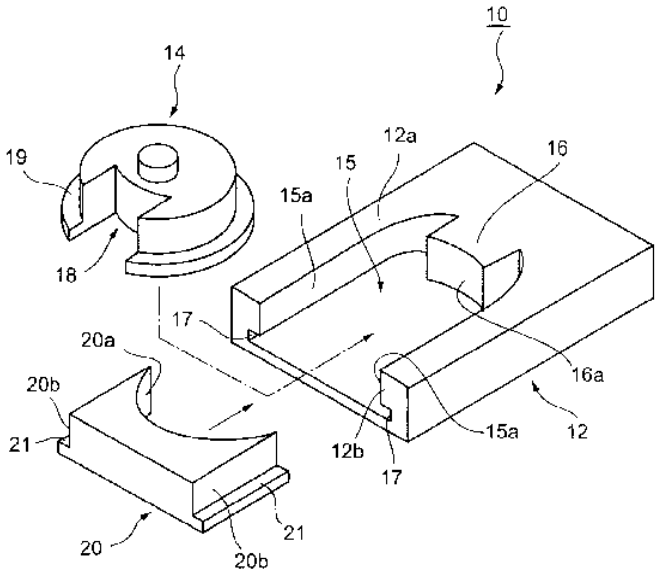

B60N 2/2872

{provided with side rests}

Definition statement

This place covers:

Illustrative example of subject matter classified in this group.

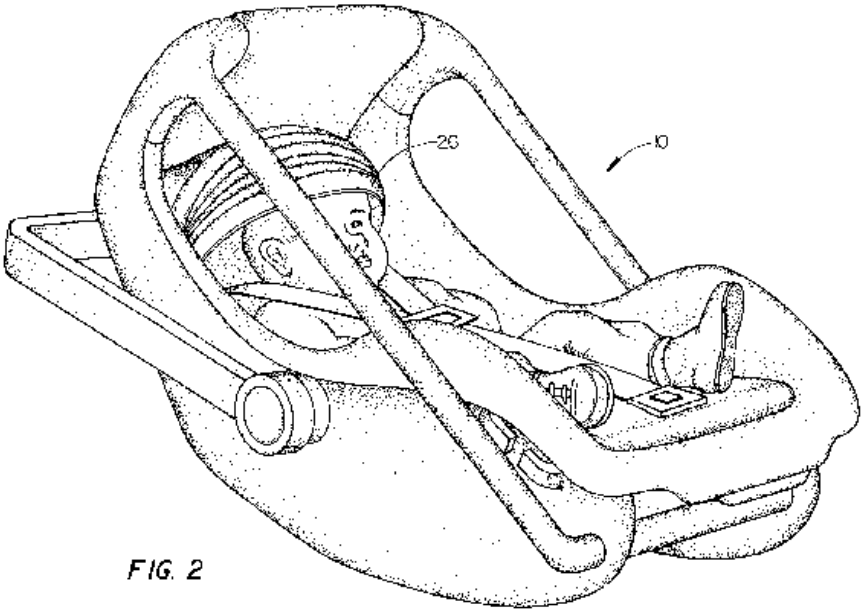

FIG. 2

B60N 2/2875

{inclinable, as a whole or partially}

Definition statement

This place covers:

Illustrative example of subject matter classified in this group.

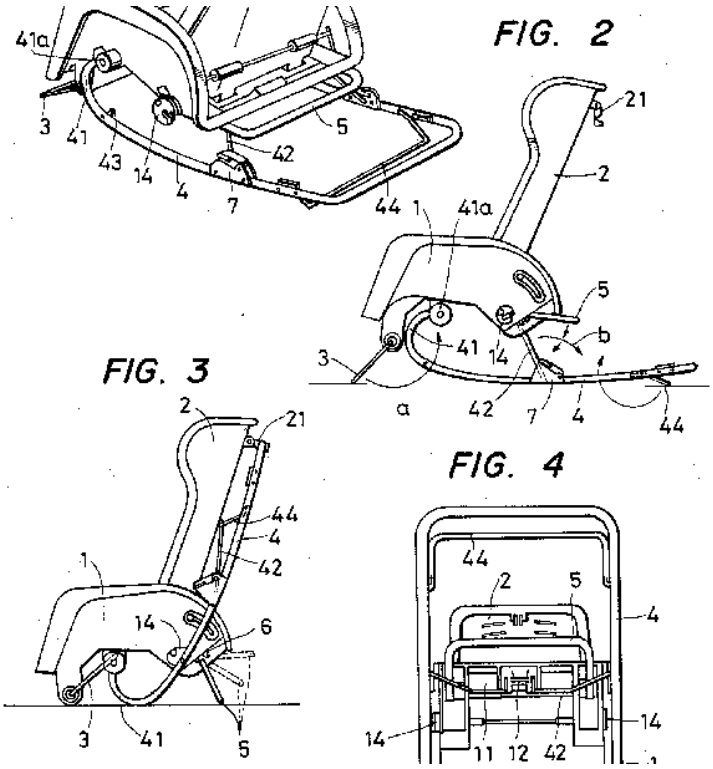

B60N 2/2878

{the back-rest being inclinable}

Definition statement

This place covers:

Child seats with a seat cushion and a back rest where the inclination of the back rest with respect to the seat cushion can be adjusted.

Illustrative example of subject matter classified in this group.

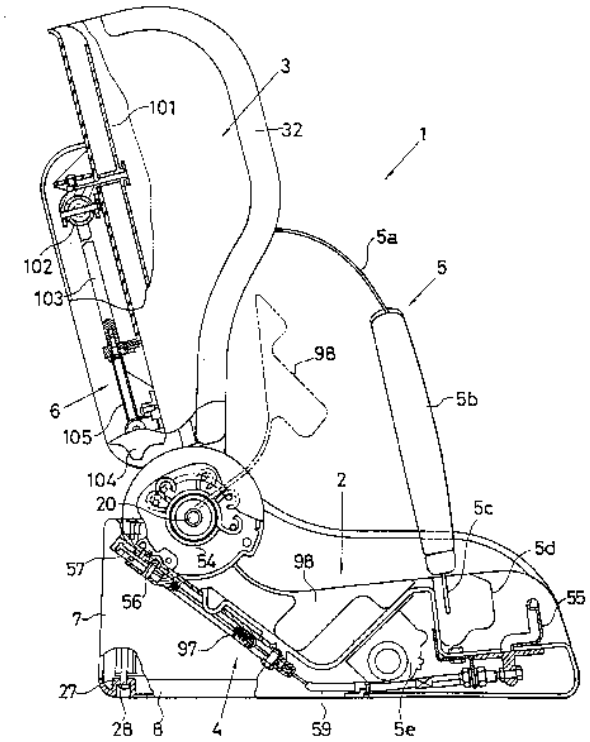

B60N 2/2881

{Upholstery, padded or cushioned members therefor}

Definition statement

This place covers:

Illustrative example of subject matter classified in this group.

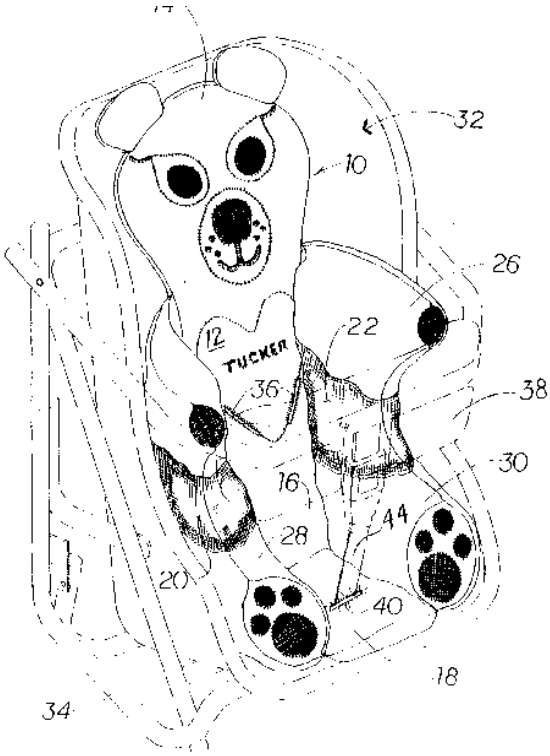

B60N 2/2884

{with protection systems against abnormal g-forces}

Definition statement

This place covers:

Systems other than safety belts for protecting childs in their seats against abnormal acceleration.

Illustrative example of subject matter classified in this group.

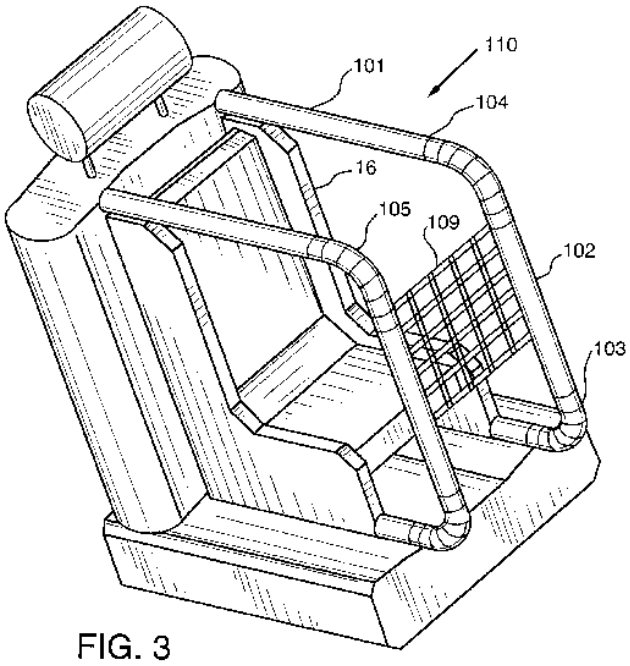

FIG. 3

References

Informative references

Attention is drawn to the following places, which may be of interest for search:

Seat belts	B60R 22/00

B60N 2/289

{coupled to the vehicle frame}

Definition statement

This place covers:

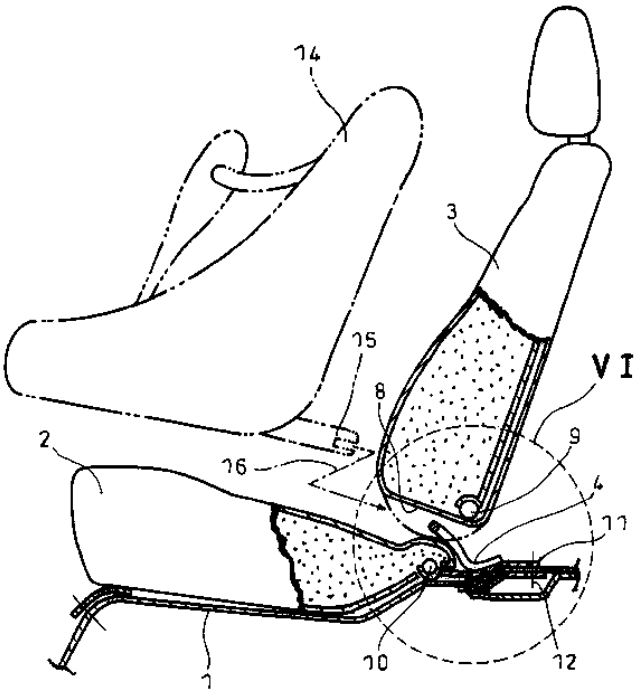

B60N 2/2893

{coupled to the seat sub-frame}

Definition statement

This place covers:

Illustrative example of subject matter classified in this group.

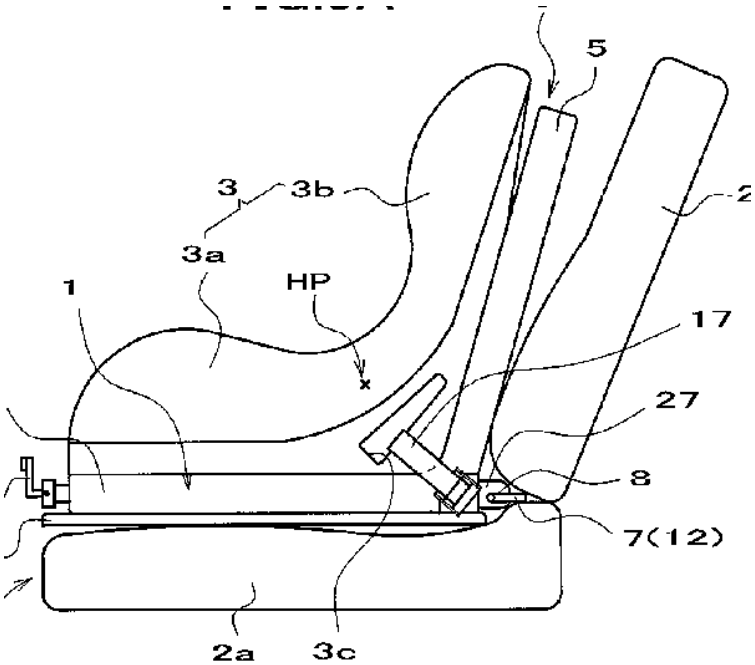

B60N 2/30

Non-dismountable {or dismountable} seats storable in a non-use position, e.g. foldable spare seats (convertible for other use B60N 2/32)

Special rules of classification

A movement of a cushion or backrest can be composed of several sequences, each of which can be assigned to a different symbol within B60N 2/30, e.g. B60N 2/3011 for the movement of the backrest on the cushion and B60N 2/305 for the movement of the cushion on the vehicle frame.

In some cases B60N 2/30 symbols can be assigned to seats even though non of the positions of the seat are "non use positions" e.g. for seats covertible into a bed. This is desirable when the wide scale of different movements of B60N 2/30 is especially helpfull to describe more clearly the way the conversion from a first to a second position is realized.

In this group (B60N 2/30), when documents refer to a plurality of aspects for which a classification entry is present, and as such the invention does not lie in one of these, it is highly desirable to classify all aspects at inventive level. An example of this classification strategy is a storable seat in B60N 2/30, which is brought in several steps from the use position to the stowed position. Each of this steps is classified separately. E.g. when a seat is stowed in a first step by tilting the back-rest on the cushion by a "portefeuille movement" and in a second step by tilting the cushion (with the back-rest) forward about a transversal axis on the floor, then the document is given the class B60N 2/3011 for the "portefeuille movement" of the back-rest and the **B60N2/30C2C4** for the movement of the cushion.

When by doing so the seat is moved into a recess of the luggage compartment then the document is further classified in B60N 2/3079 and so on.

Glossary of terms

In this place, the following terms or expressions are used with the meaning indicated:

Non-use position	position of the seat where it is stowed away

B60N 2/3011

{the back-rest being hinged on the cushion, e.g. "portefeuille movement"}

Definition statement

This place covers:

Illustrative example of subject matter classified in this group.

G. 1

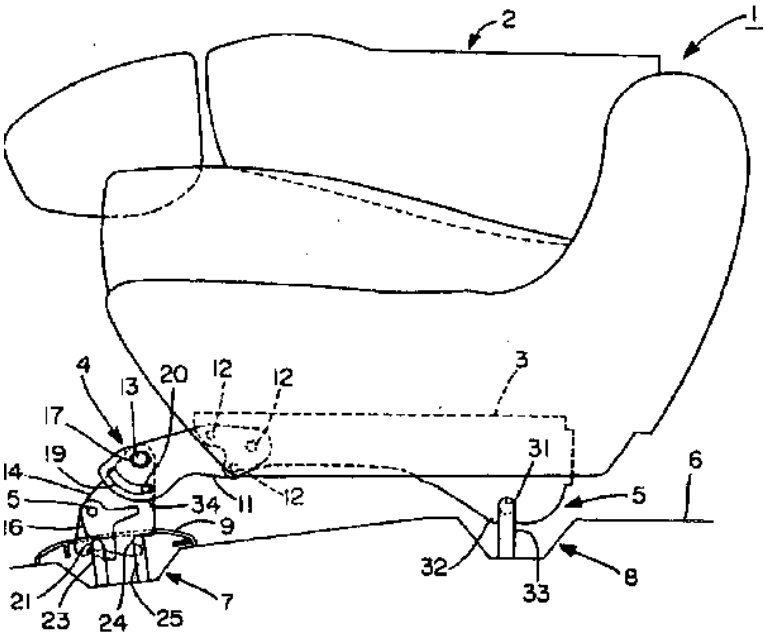

B60N 2/3013

{the back-rest being hinged on the vehicle frame}

Definition statement

This place covers:

Illustrative example of subject matter classified in this group.

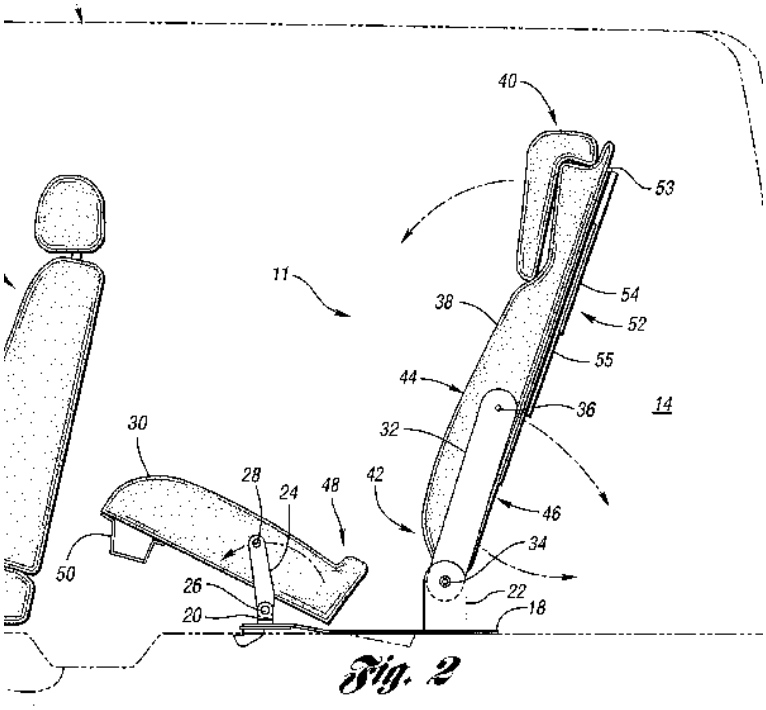

B60N 2/3015

{the axis being located at the top of the back-rest}

Definition statement

This place covers:

Illustrative example of subject matter classified in this group.

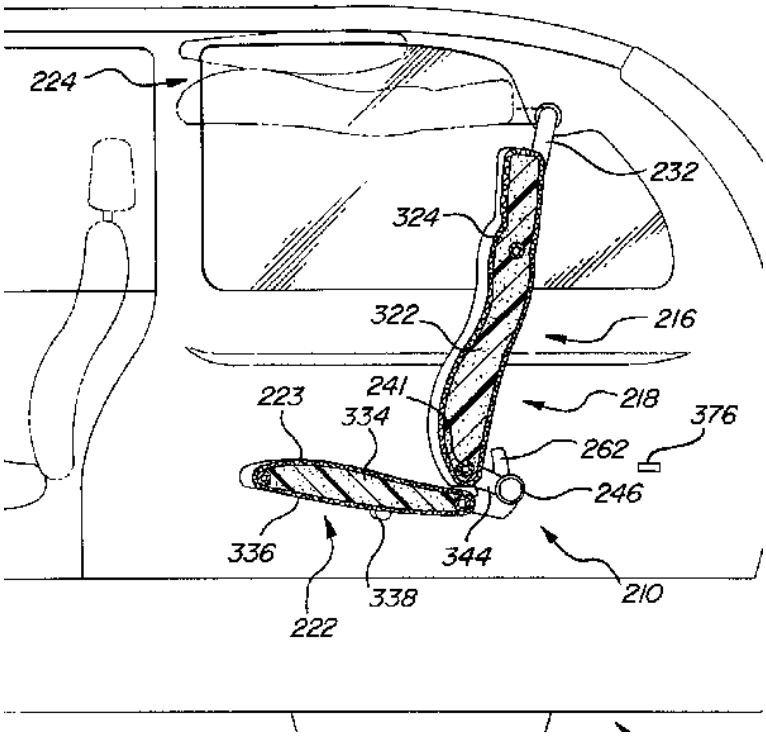

B60N 2/3022

{along longitudinal axis}

Definition statement

This place covers:

Illustrative example of subject matter classified in this group.

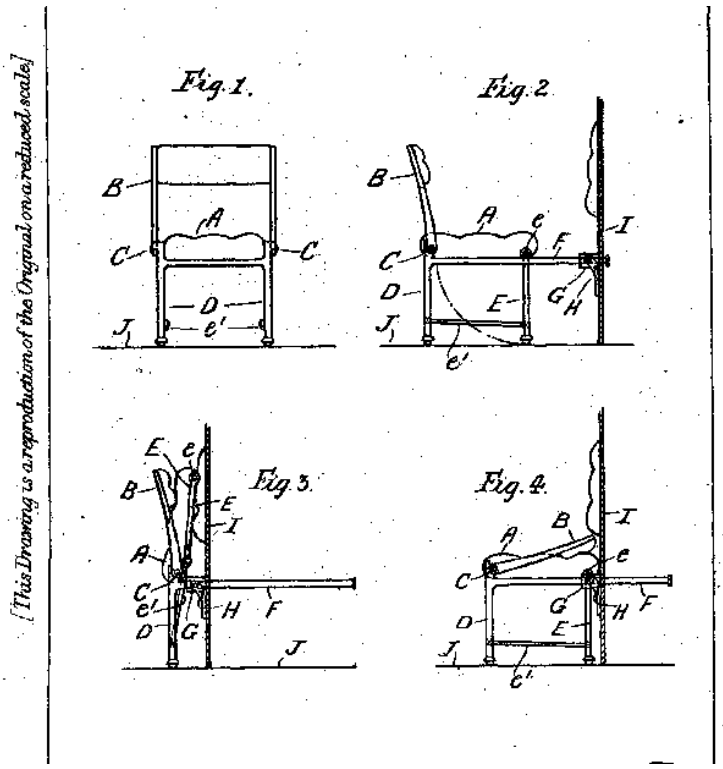

B60N 2/3025

{along transversal axis}

Definition statement

This place covers:

Illustrative example of subject matter classified in this group.

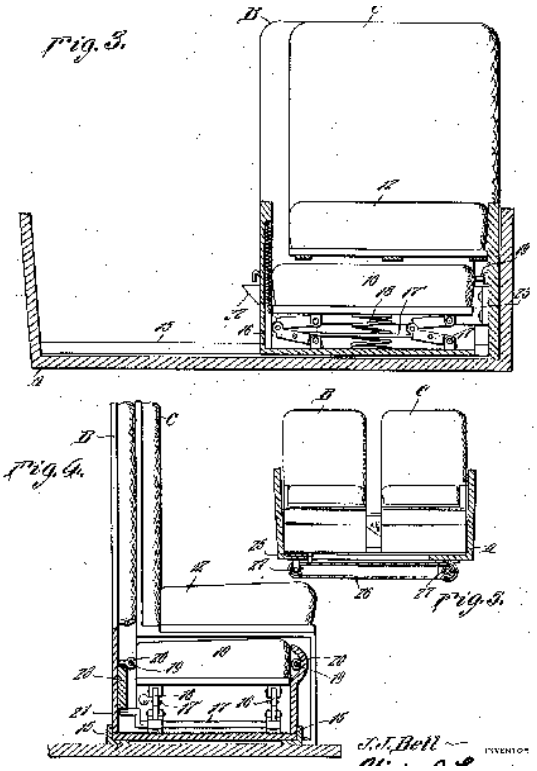

B60N 2/3027

{along vertical axis}

Definition statement

This place covers:

Illustrative example of subject matter classified in this group.

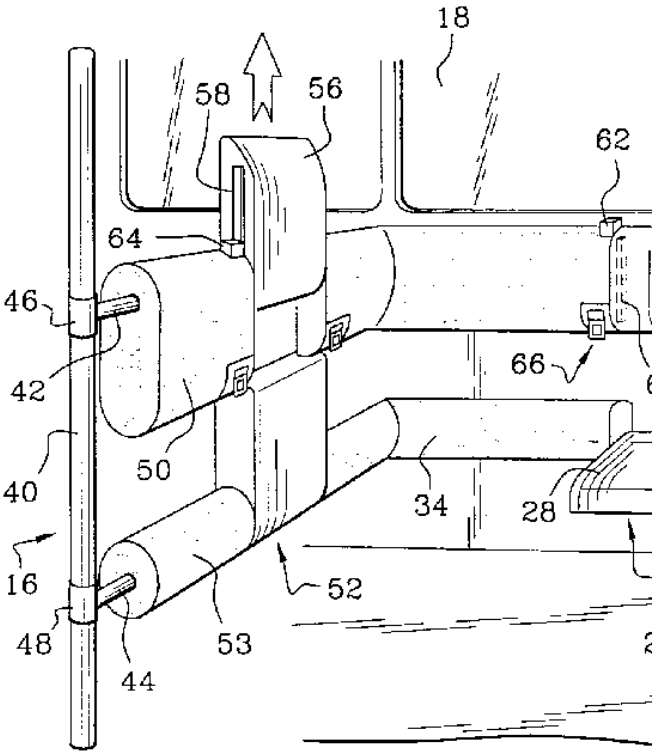

B60N 2/3029

{by composed movement}

Glossary of terms

In this place, the following terms or expressions are used with the meaning indicated:

Composed movement	A movement of the backrest which is composed by different movements at the same time (not sequentielly) e.g. the front end of the cushions slides longitudinally while the back end moves about a rod.

B60N 2/3031

{in a longitudinal-vertical plane}

Definition statement

This place covers:

Illustrative example of subject matter classified in this group.

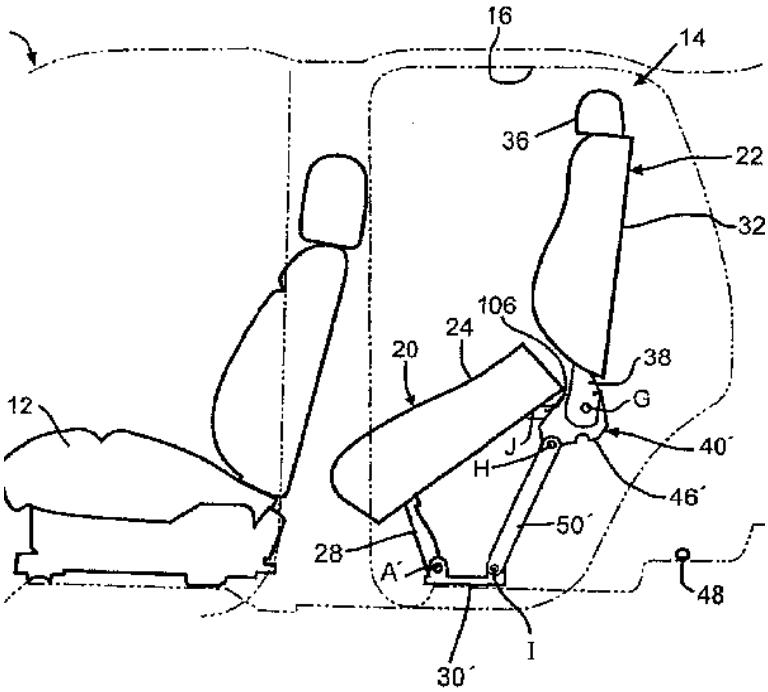

B60N 2/3034

{in a longitudinal-transversal plane}

Definition statement

This place covers:

Illustrative example of subject matter classified in this group.

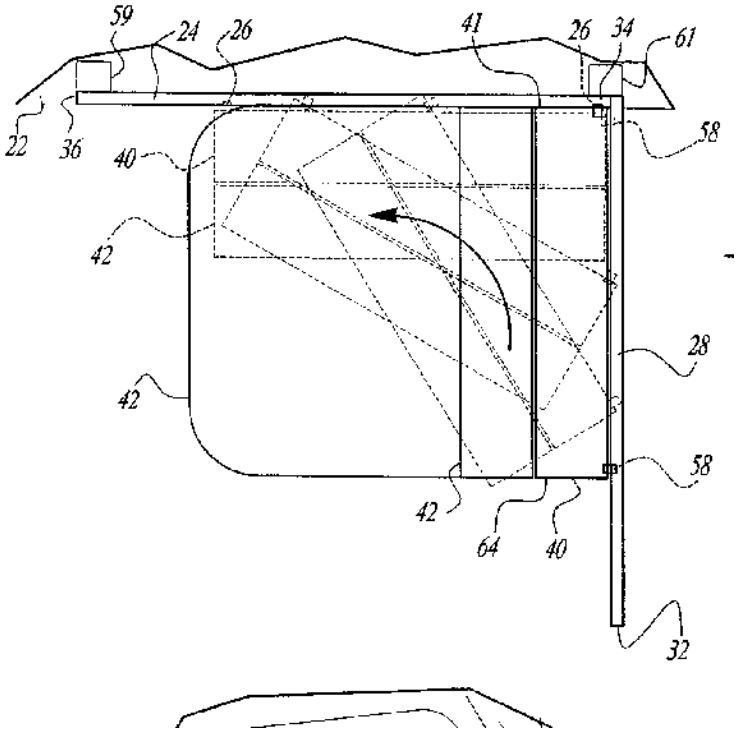

B60N 2/3043

{about longitudinal axis}

Definition statement

This place covers:

Illustrative example of subject matter classified in this group.

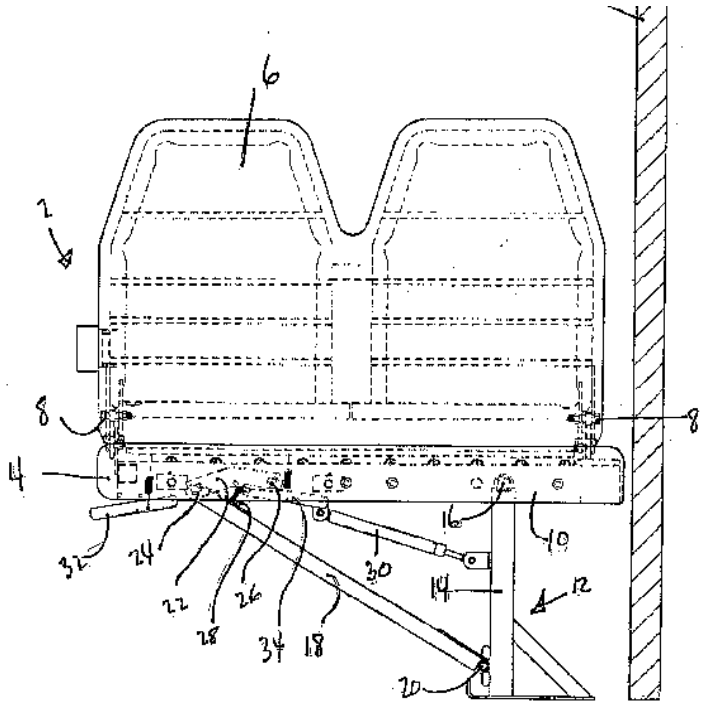

B60N 2/3047

{the cushion being hinged at the back-rest}

Definition statement

This place covers:

Illustrative example of subject matter classified in this group.

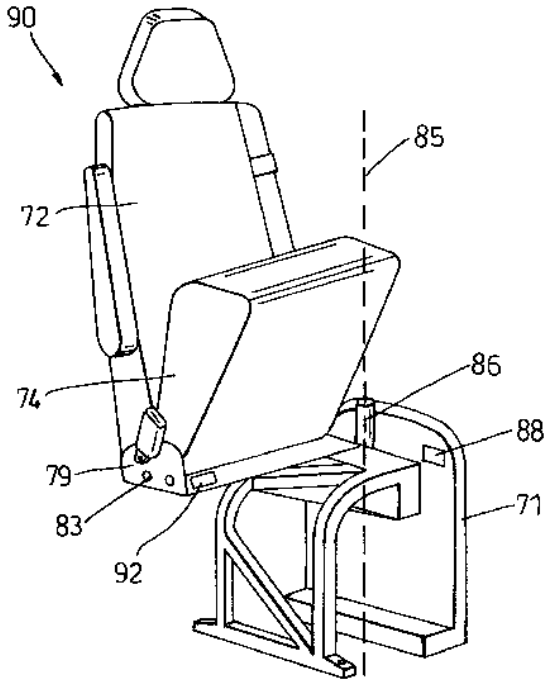

B60N 2/305

{the cushion being hinged on the vehicle frame}

Definition statement

This place covers:

Illustrative example of subject matter classified in this group.

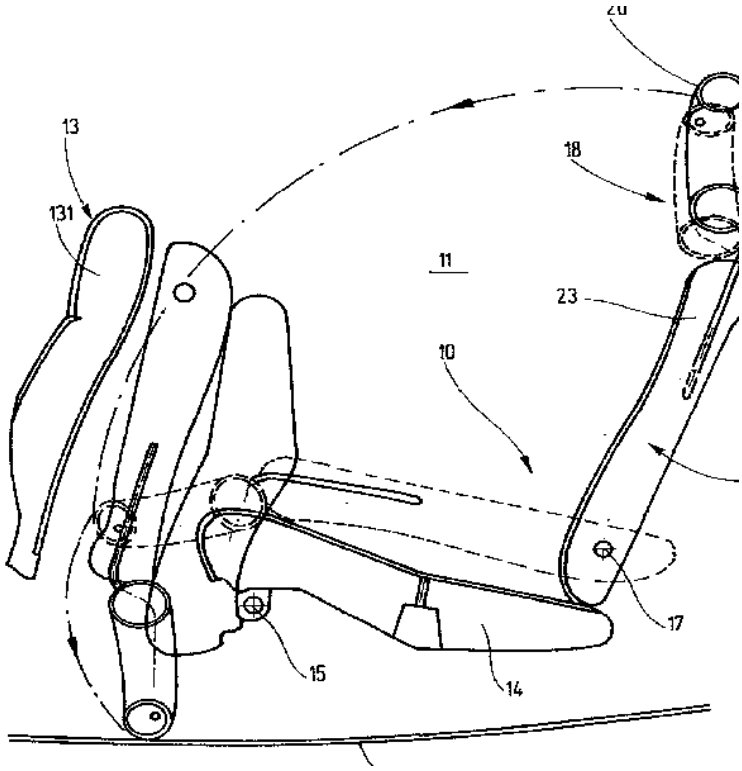

B60N 2/3052

{about vertical axis}

Definition statement

This place covers:

Illustrative example of subject matter classified in this group.

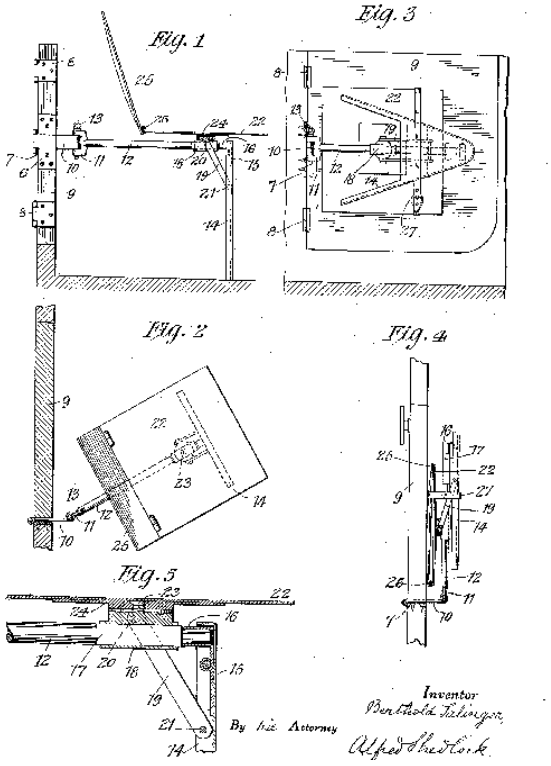

B60N 2/3056

{along longitunal axis}

Definition statement

This place covers:

Illustrative example of subject matter classified in this group.

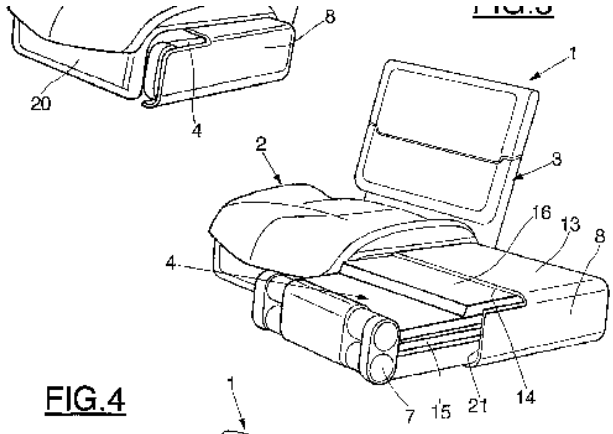

FIG.4

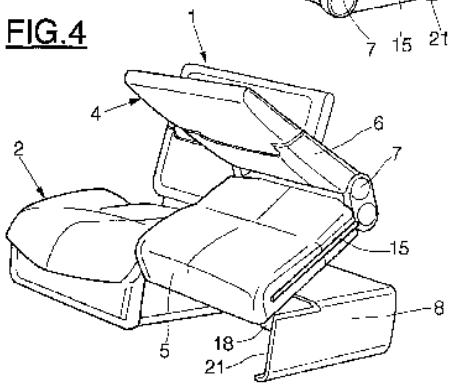

B60N 2/3059

{along transversal axis}

Definition statement

This place covers:

Illustrative example of subject matter classified in this group.

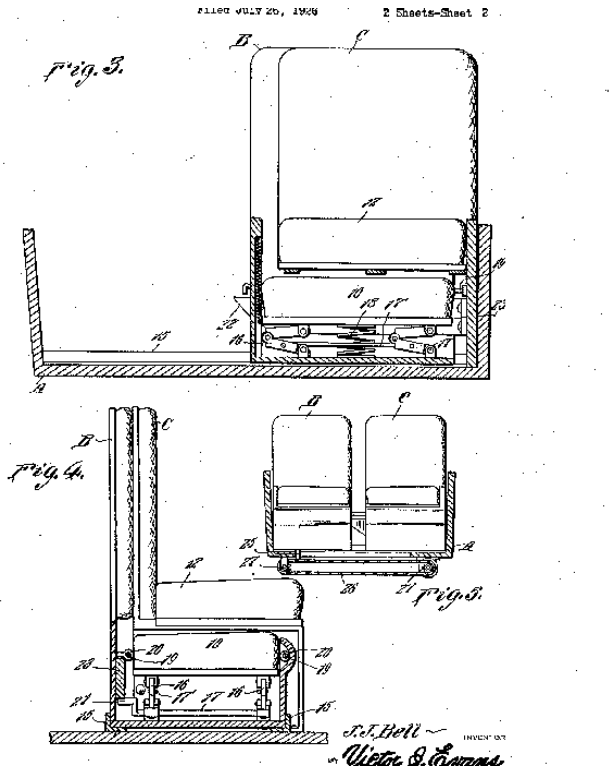

B60N 2/3063

{by composed movement}

Glossary of terms

In this place, the following terms or expressions are used with the meaning indicated:

Composed movement	A movement of a cushion which is composed by different movements at the same time (not sequentielly) e.g. the front end of the cushions slides longitudinally while the back end moves about a rod.

B60N 2/3065

{in a longitudinal-vertical plane}

Definition statement

This place covers:

Illustrative example of subject matter classified in this group.

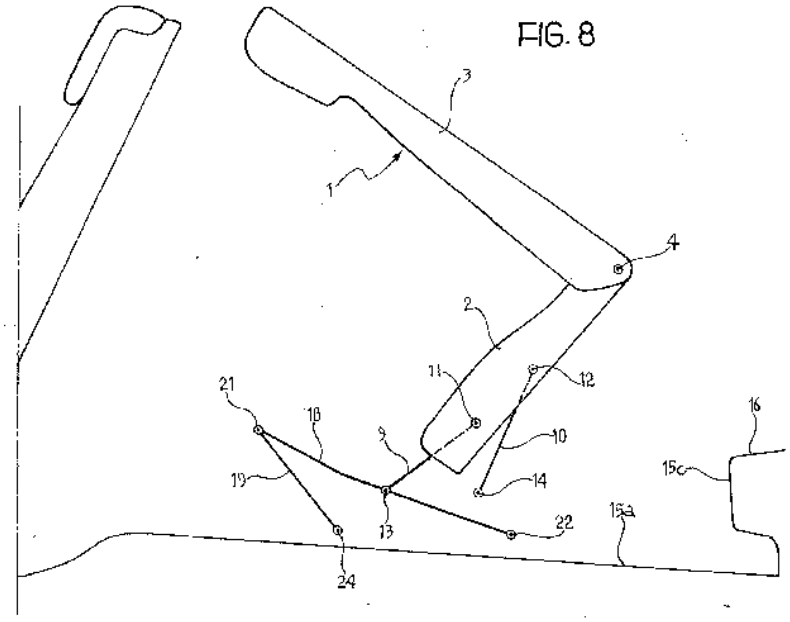

B60N 2/3068

{in a longitudinal-transversal plane}

Definition statement

This place covers:

Illustrative example of subject matter classified in this group.

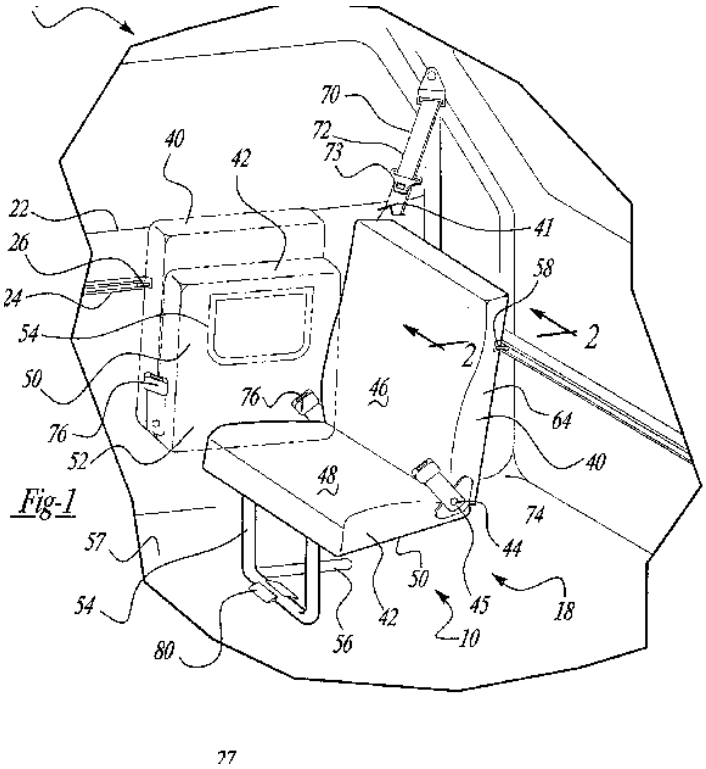

B60N 2/307

{in a transversal-vertical plane}

Definition statement

This place covers:

Illustrative example of subject matter classified in this group.

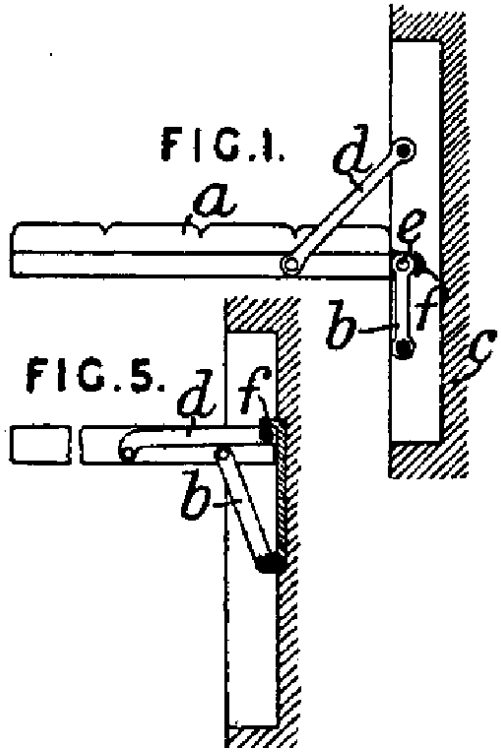

B60N 2/3075

{stowed in recess (B60N 2/3079 takes precedence)}

Definition statement

This place covers:

Illustrative example of subject matter classified in this group.

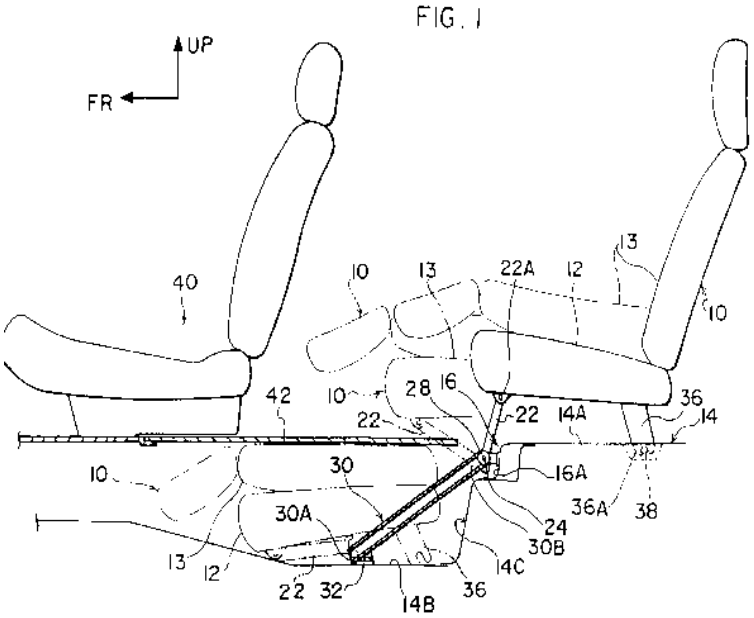

B60N 2/3077

{stowed in the luggage compartment}

Definition statement

This place covers:

Illustrative example of subject matter classified in this group.

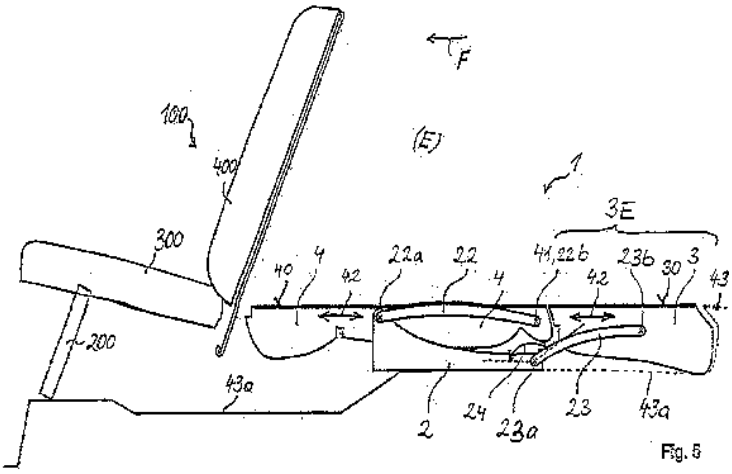

Fig. 5

B60N 2/3079

{in a recess}

Definition statement

This place covers:

Illustrative example of subject matter classified in this group.

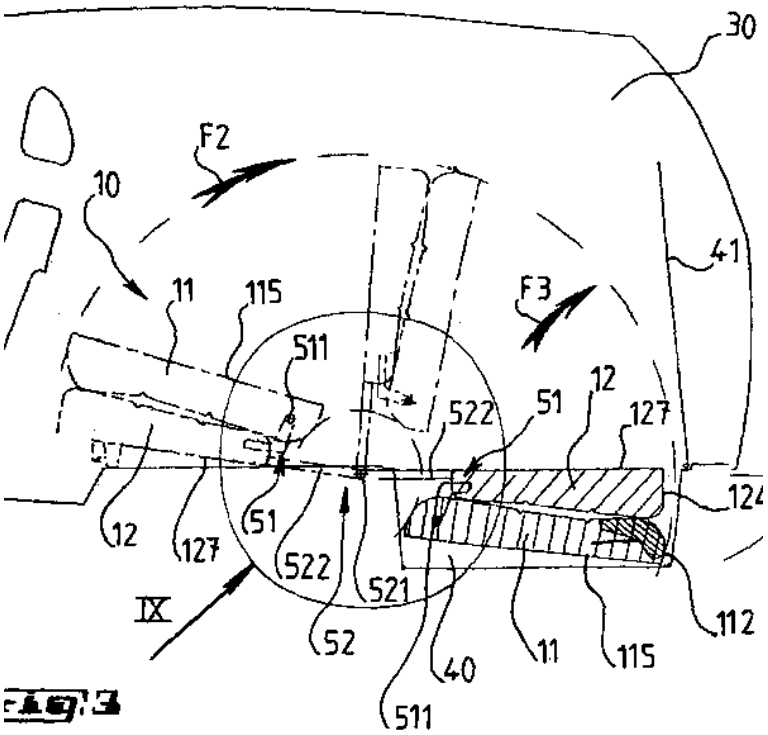

B60N 2/3084

{Disappearing in a recess of the back-rest}

Definition statement

This place covers:

Illustrative example of subject matter classified in this group.

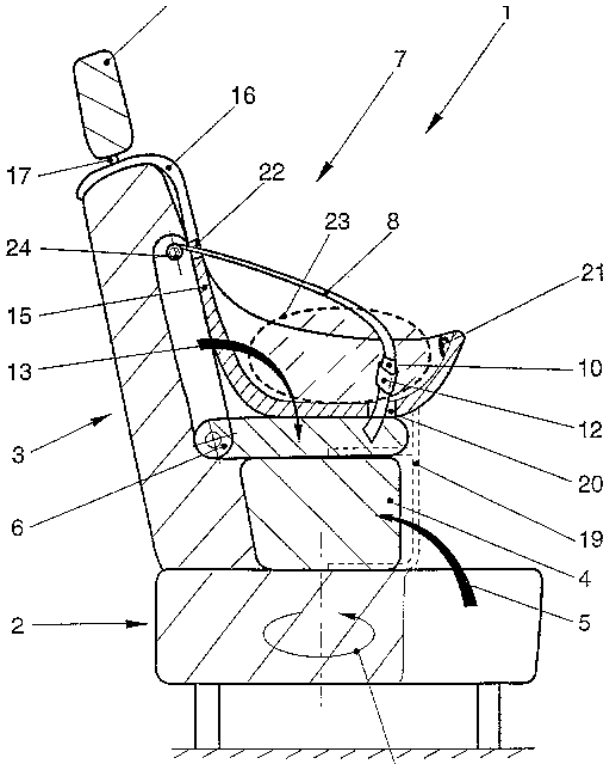

B60N 2/3086

{Disappearing in a recess of the cushion}

Definition statement

This place covers:

Illustrative example of subject matter classified in this group.

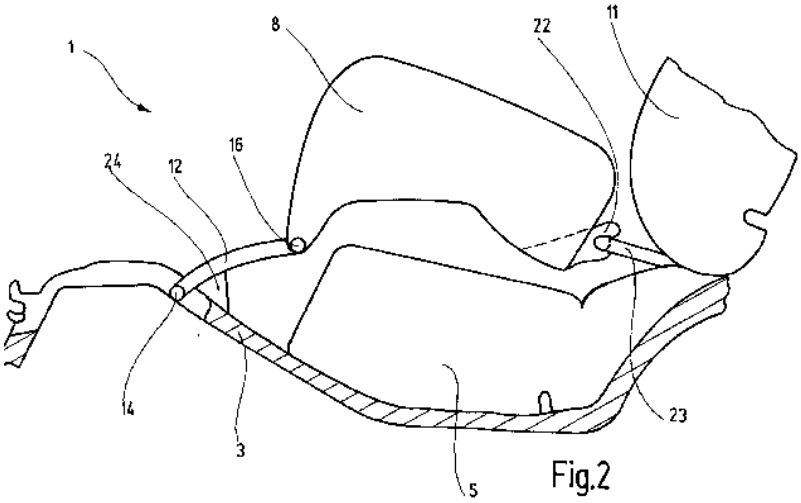

Fig.2

B60N 2/309

{rods}

Definition statement

This place covers:

Illustrative example of subject matter classified in this group.

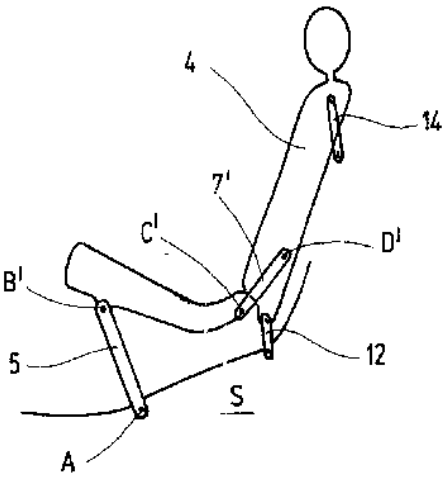

Fig.5

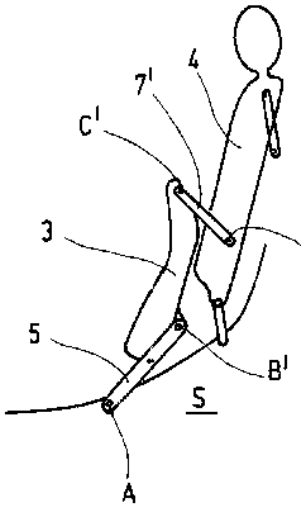

Fig.6

B60N 2/3093

{slides}

Definition statement

This place covers:

Illustrative example of subject matter classified in this group.

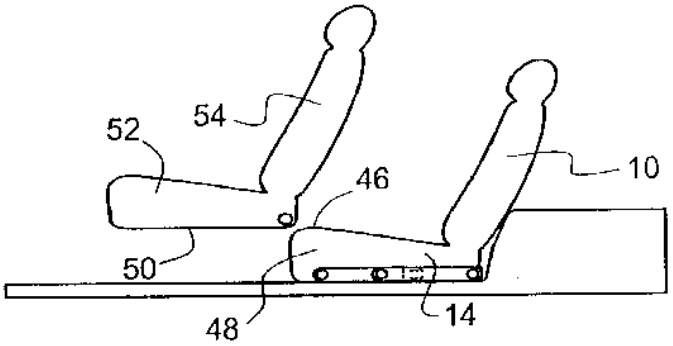

FIG. - 3c

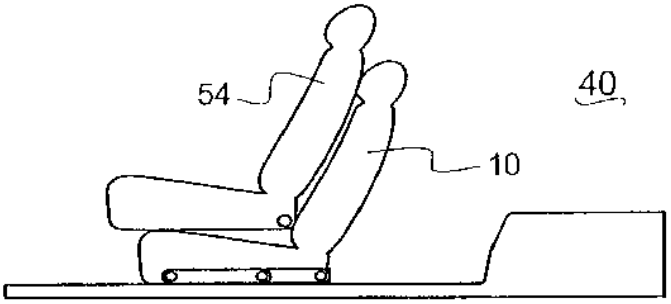

B60N 2/3095

{Auxiliary rear seats accessible from outside the vehicle when in an in-use position}

Definition statement

This place covers:

Illustrative example of subject matter classified in this group.

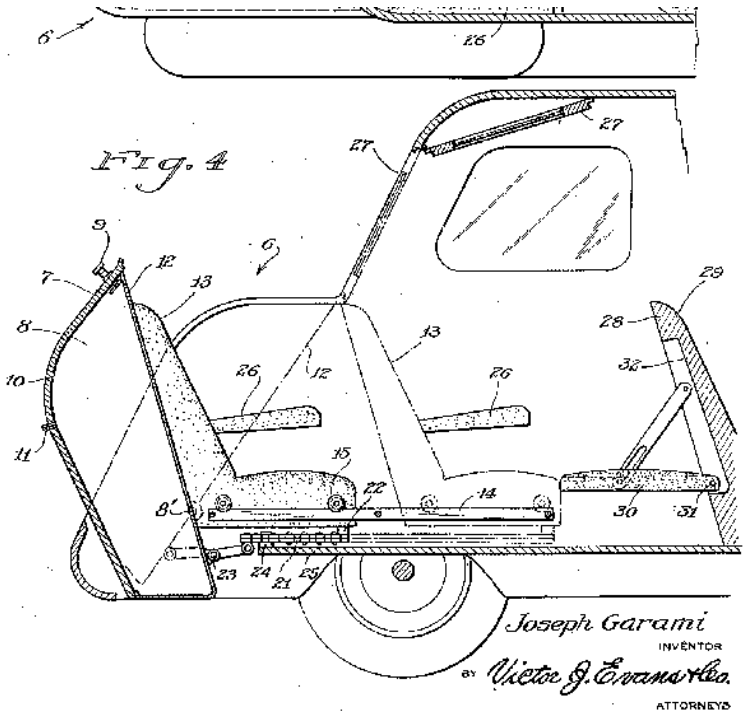

B60N 2/3097

{Dismountable seats storable in a non-use position (B60N 2/015, B60N 2/28 take precedence)}

Definition statement

This place covers:

Illustrative example of subject matter classified in this group.

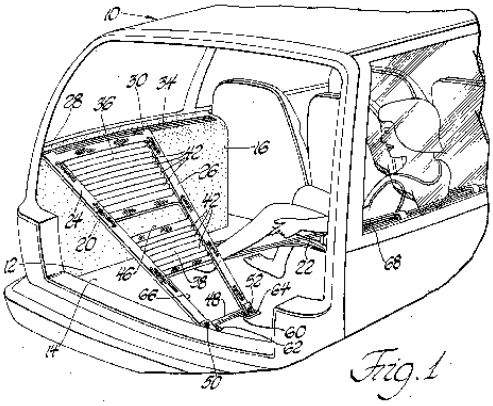

Fig. 1

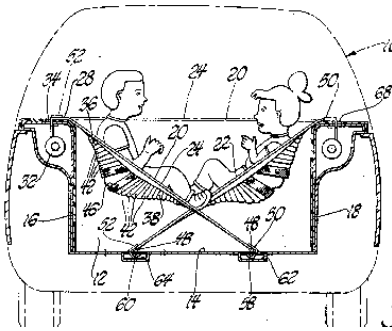

Fig. 2

B60N 2/345

{by adding parts}

Definition statement

This place covers:

Illustrative example of subject matter classified in this group.

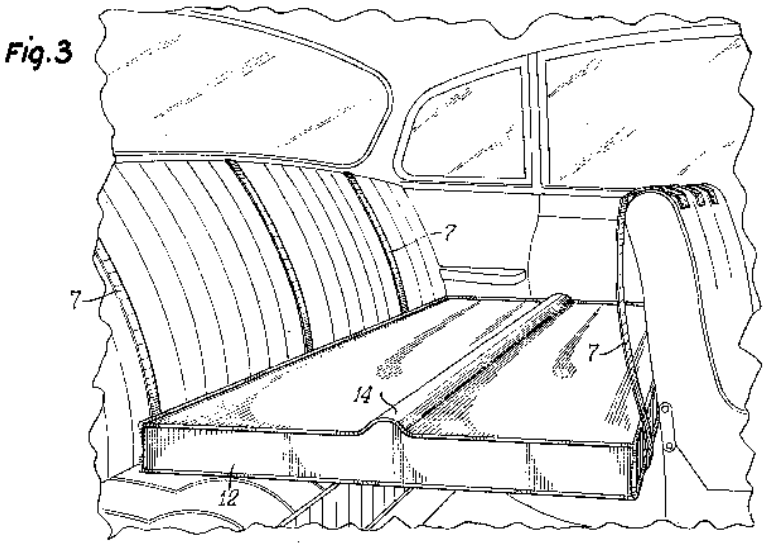

B60N 2/36

into a loading platform {(ski-bags in B60R 5/006, B60N 2/065 takes precedence)}

Definition statement

This place covers:

Illustrative example of subject matter classified in this group.

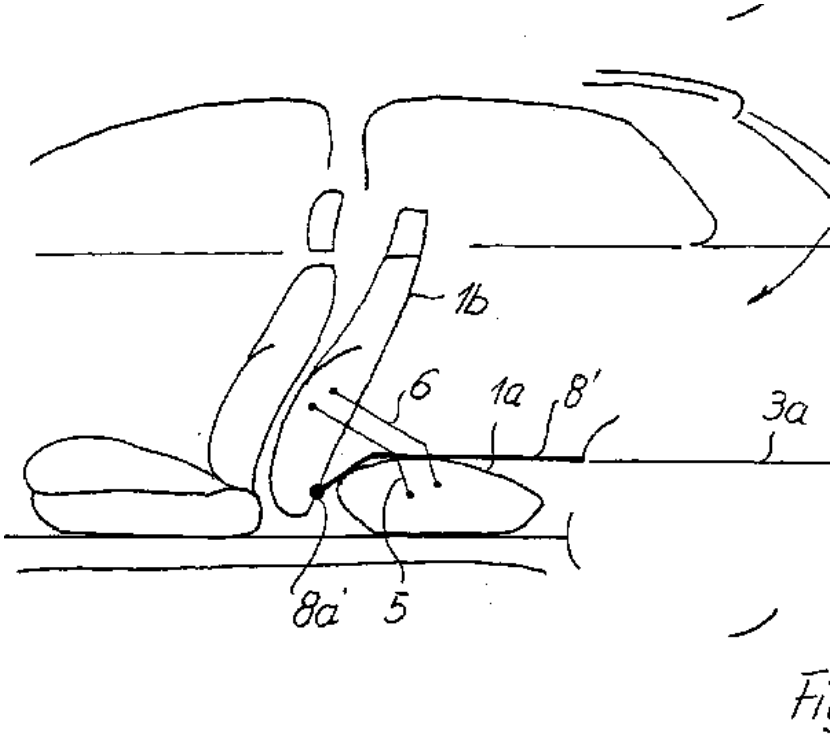

B60N 2/366

{characterised by the locking device}

Definition statement

This place covers:

Seats with locking means at the upper end of the backrest (e.g. connecting the backrest to the car body) without additional option of adjustment of the reclining angle of the back-rest.

References

Limiting references

This place does not cover:

Seats with locking means at the upper end of the backrest (e.g. connecting the backrest to the car body) with additional option of adjustment of the reclining angle of the back-rest	B60N 2/2245

B60N 2/38

specially constructed for use on tractors or like off-road vehicles

Definition statement

This place covers:

Illustrative example of subject matter classified in this group.

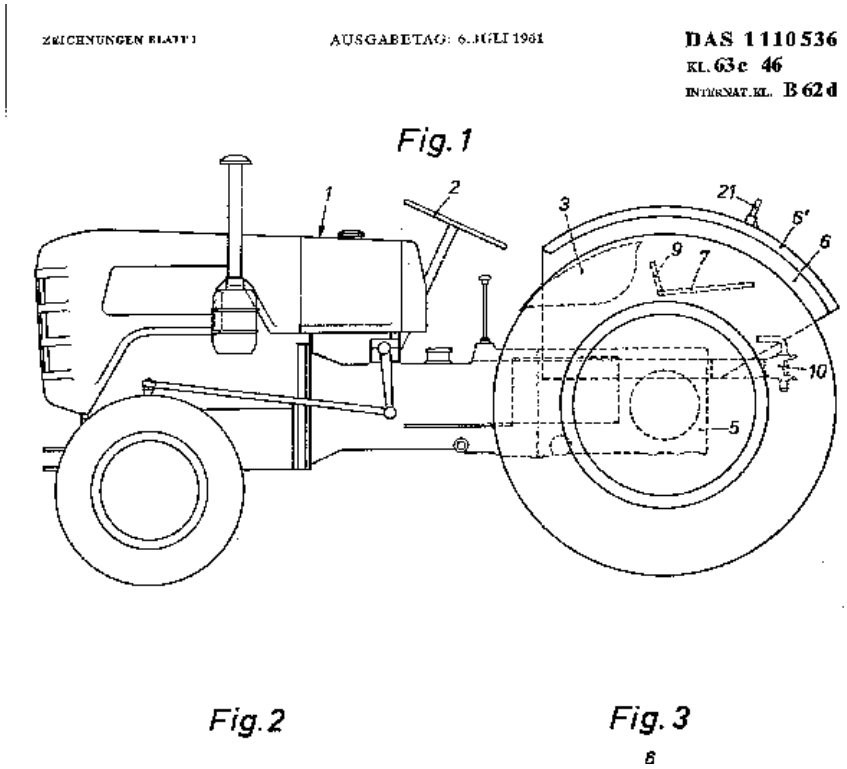

References

Limiting references

This place does not cover:

Seats for military or construction vehicle	B60N 2/24

B60N 2/39

Seats tiltable to compensate for roll inclination of vehicles

Definition statement

This place covers:

Illustrative example of subject matter classified in this group.

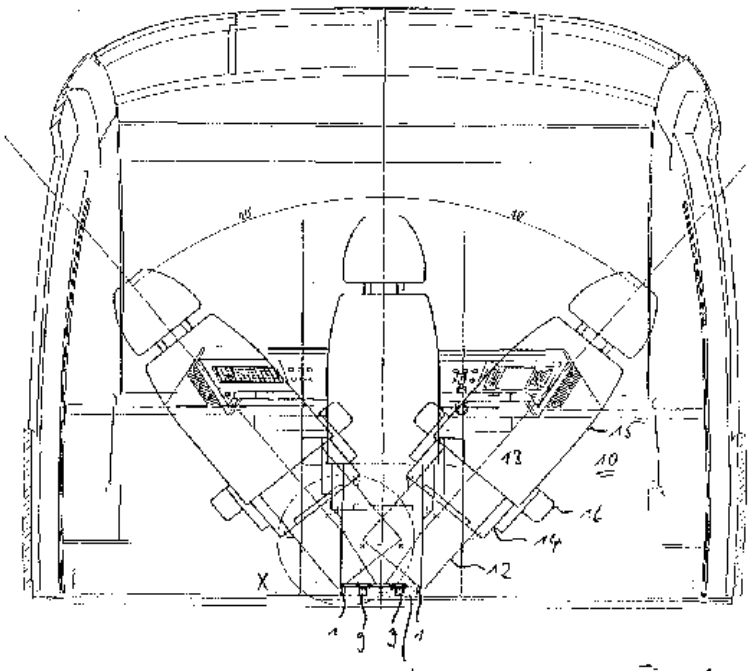

Fig. 1

B60N 2/40

saddle type

Definition statement

This place covers:

Illustrative example of subject matter classified in this group.

Zu der Patentschrift 7195
Kl. 63g

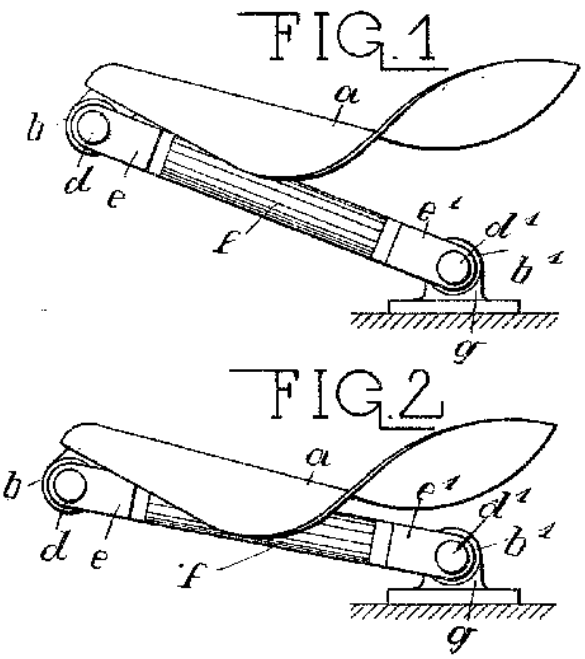

B60N 2/4221

{due to impact coming from the front}

Definition statement

This place covers:

Illustrative example of subject matter classified in this group.

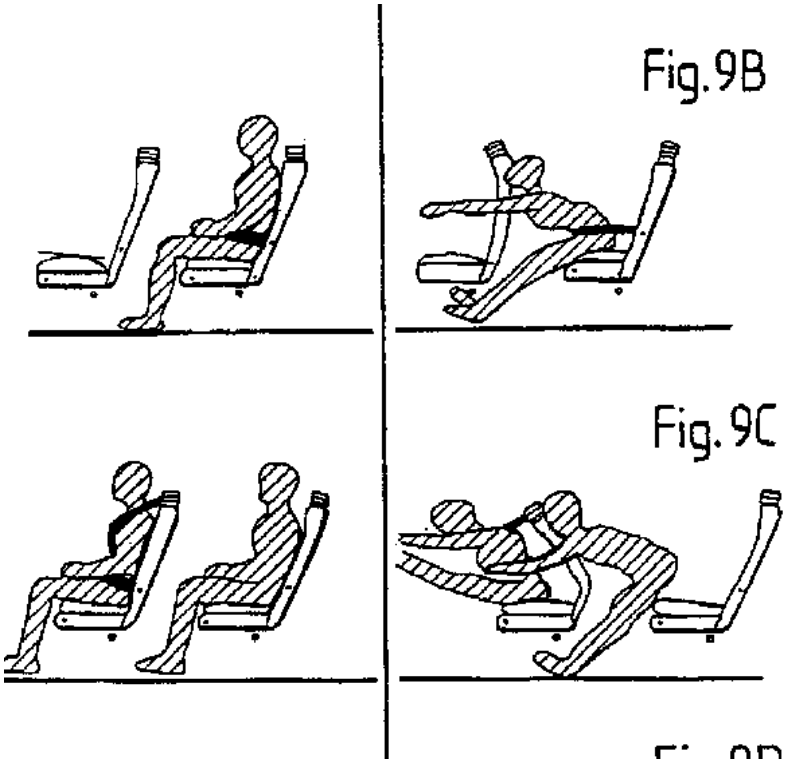

B60N 2/4228

{due to impact coming from the rear}

Definition statement

This place covers:

Illustrative example of subject matter classified in this group.

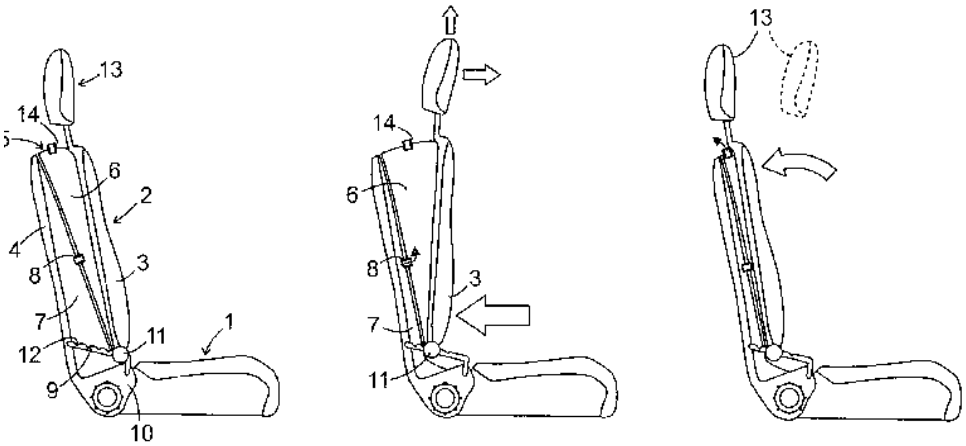

FIG.1 FIG.2 FIG.3

B60N 2/4235

{transversal}

Definition statement

This place covers:

Illustrative example of subject matter classified in this group.

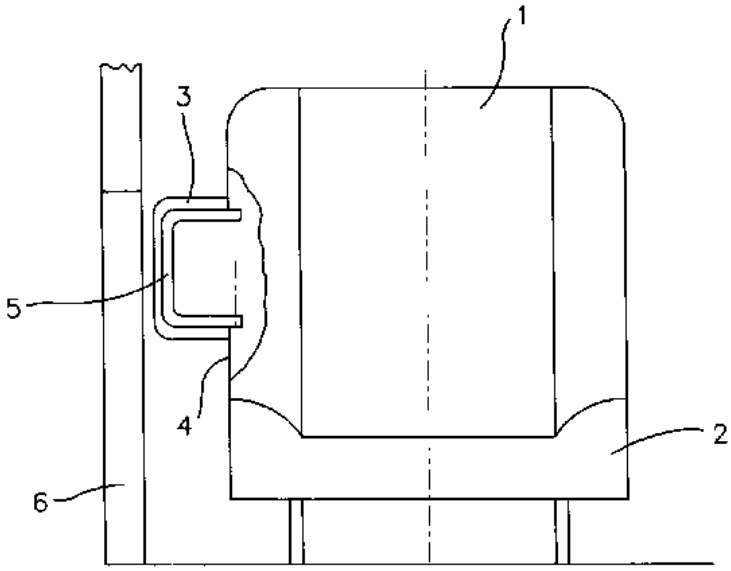

Fi

B60N 2/4242

{vertical}

Definition statement

This place covers:

Illustrative example of subject matter classified in this group.

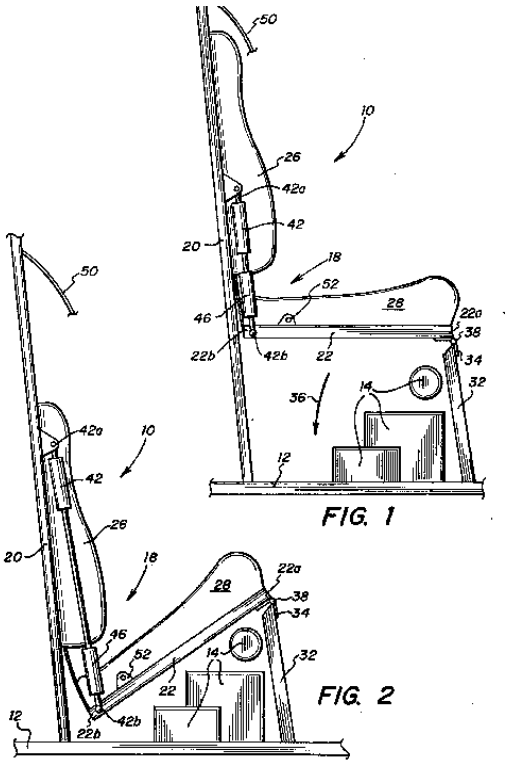

B60N 2/4249

{fixed structures, i.e. where neither the seat nor a part thereof are displaced during a crash}

Definition statement

This place covers:

Seats with rigid structures which keep their form and which are not displaced during a vehicle crash

Illustrative example of subject matter classified in this group.

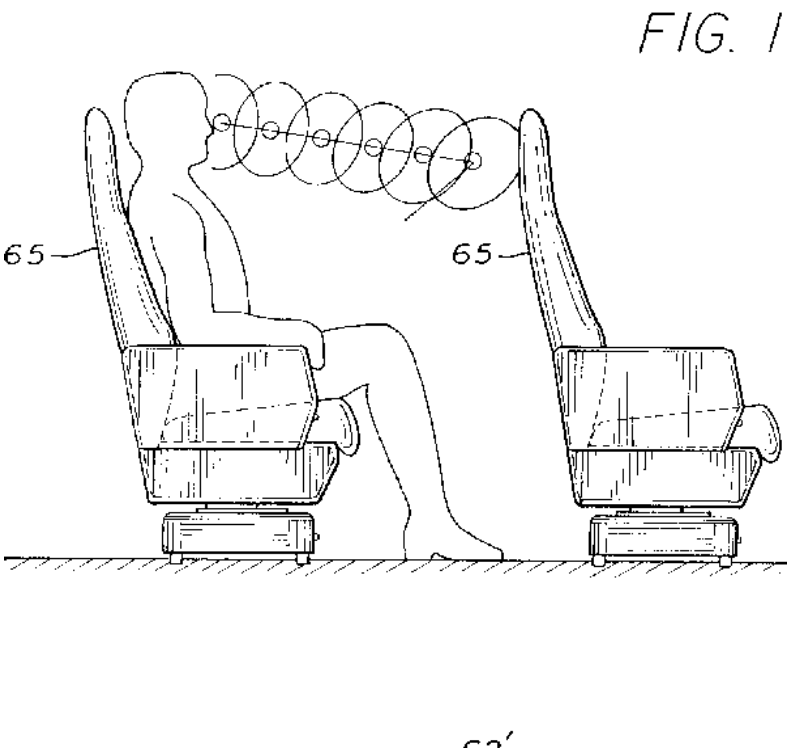

References

Informative references

Attention is drawn to the following places, which may be of interest for search:

Seats or parts thereof being displaced during a crash	B60N 2002/247

B60N 2/4256

{the shape of the seat being specially adapted for a particular purpose or for particular vehicles}

Definition statement

This place covers:

Seats with adaptations for special vehicles, e.g. for race cars having different requirements than for a normal vehilce.

Illustrative example of subject matter classified in this group.

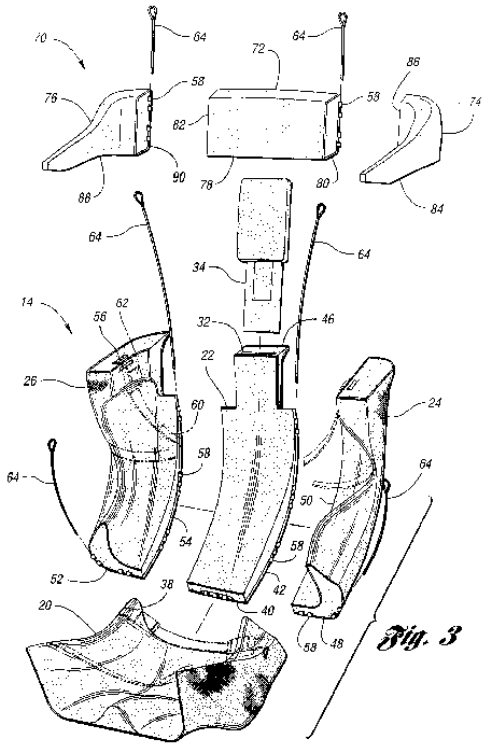

B60N 2/4263

{with anti-submarining systems}

Definition statement

This place covers:

Illustrative example of subject matter classified in this group.

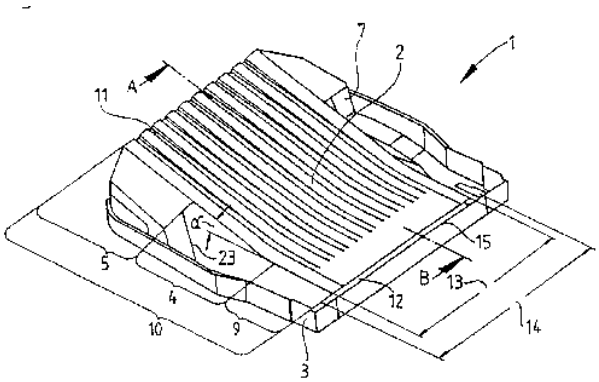

Fig. 2

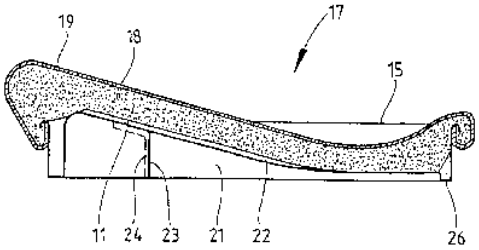

B60N 2/42709

{involving residual deformation or fracture of the structure}

Definition statement

This place covers:

Illustrative example of subject matter classified in this group.

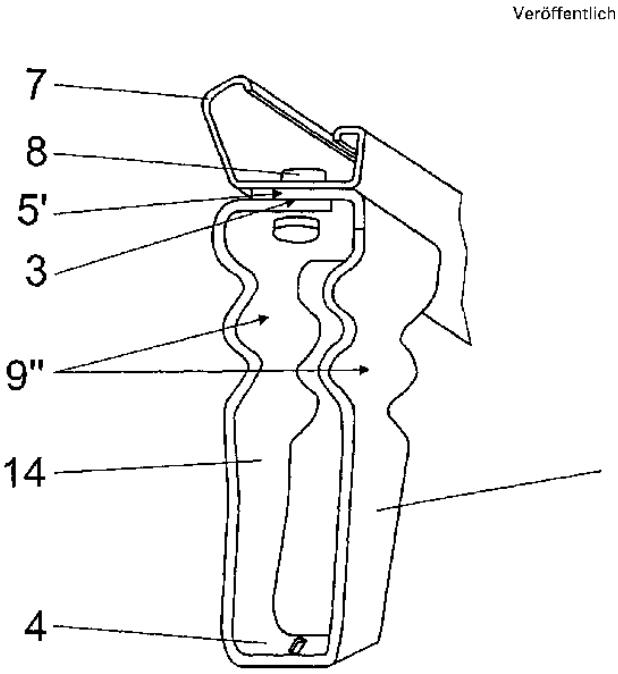

B60N 2/42718

{with anti-submarining systems}

Definition statement

This place covers:

Illustrative example of subject matter classified in this group.

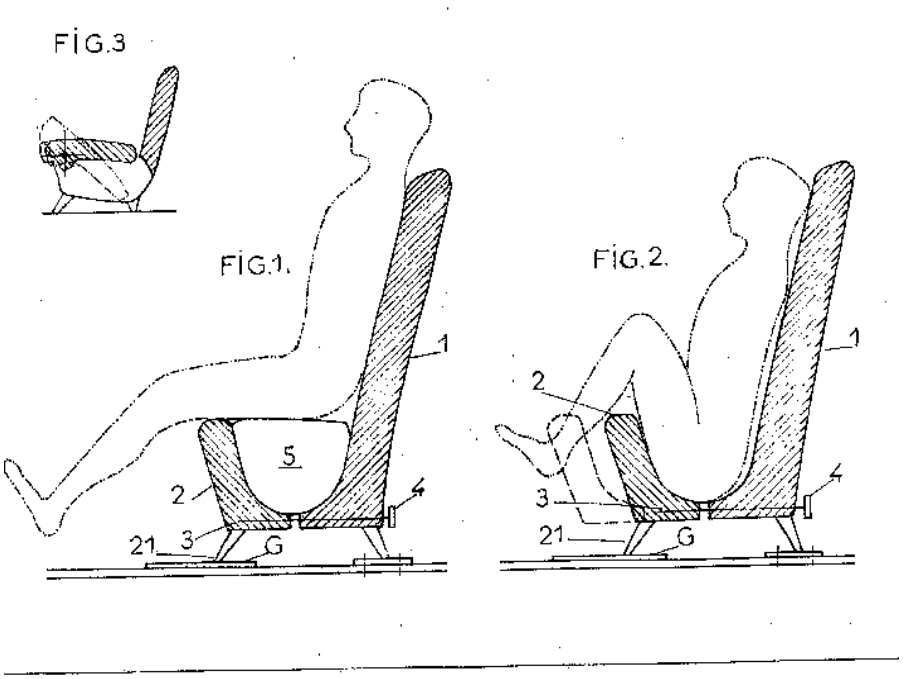

B60N 2/42745

{of the back-rest (B60N 2/433 takes precedence; higher part of the back-rest moving together with the headrest B60N 2/4885)}

Definition statement

This place covers:

Illustrative example of subject matter classified in this group.

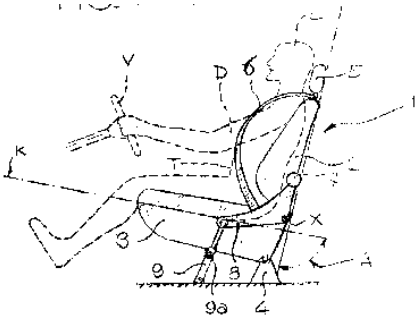

FIG. 2

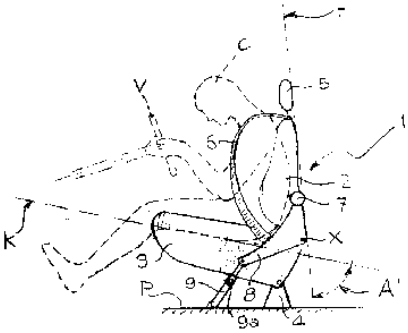

B60N 2/42754

{of the cushion}

Definition statement

This place covers:

Illustrative example of subject matter classified in this group.

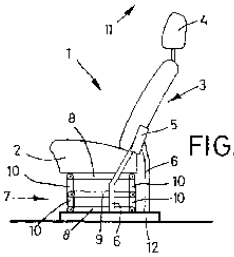

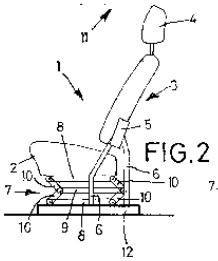

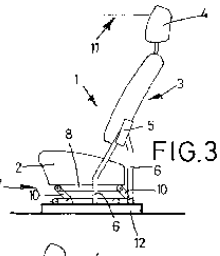

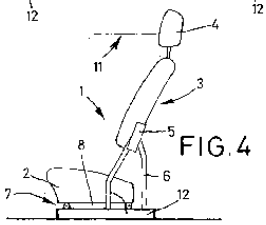

B60N 2/42763

{with anti-submarining systems}

Definition statement

This place covers:

Illustrative example of subject matter classified in this group.

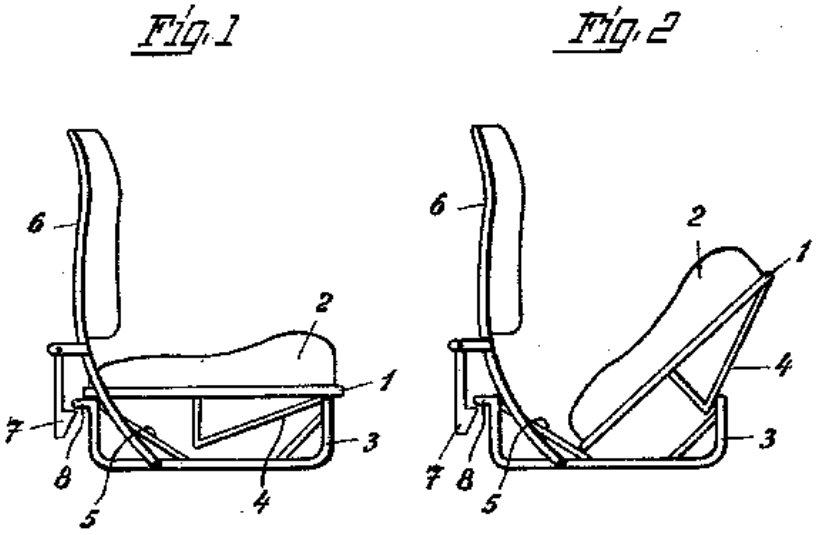

B60N 2/42781

{mechanical triggering}

Definition statement

This place covers:

Illustrative example of subject matter classified in this group.

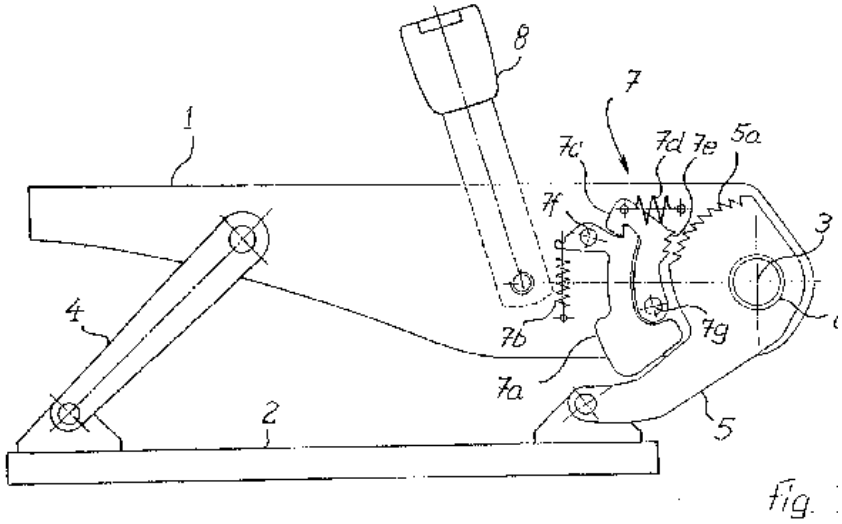

B60N 2/4279

{electric or electronic triggering}

Definition statement

This place covers:

Illustrative example of subject matter classified in this group.

FIG. 2

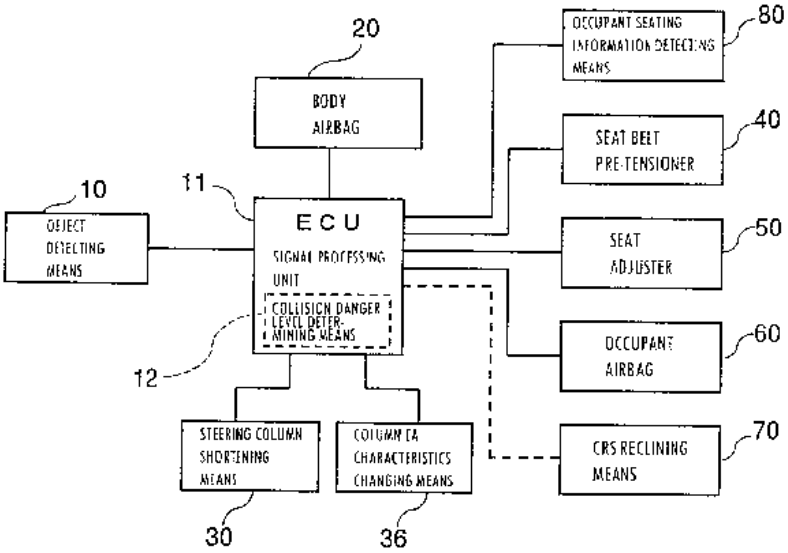

B60N 2/433

Safety locks for back-rests, e.g. with locking bars activated by inertia

Definition statement

This place covers:

Illustrative example of subject matter classified in this group.

Fig. 5

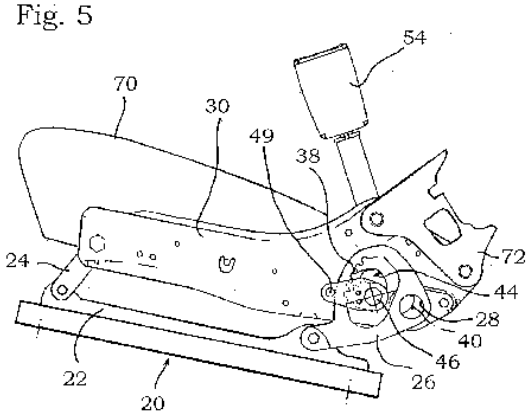

Fig.6

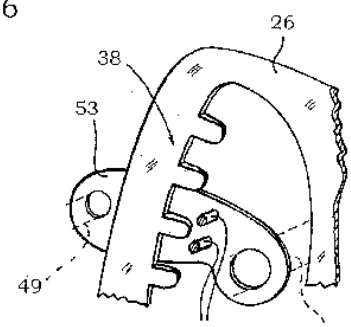

B60N 2/441

{Panels between front seats}

Definition statement

This place covers:

Illustrative example of subject matter classified in this group.

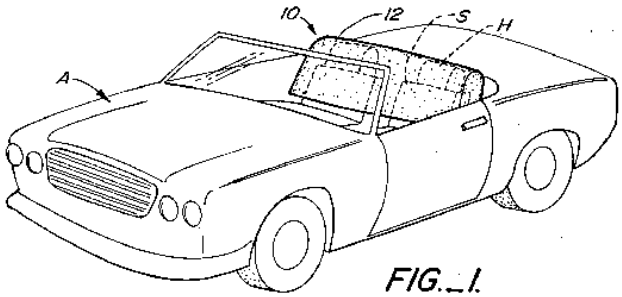

FIG._1.

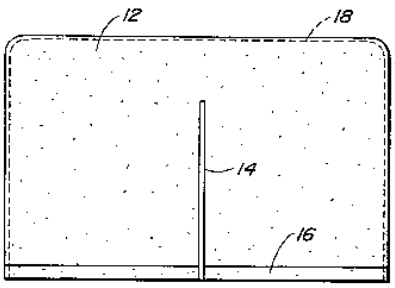

FIG._2.

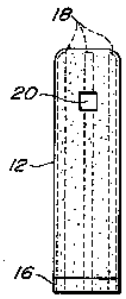

FIG._3.

B60N 2/4415

{Hydro-pneumatic adjustments of the shape (for lumbar supports B60N 2/665; for coach-like constructions B60N 2/7082; arrangement or mounting of air bags in vehicle seats B60R 21/207)}

Definition statement

This place covers:

Devices for altering the contour of a seat portion by the use of liquid or gaseous substances.

Adjustment of shape by hydro-pneumatic means

Blowing up of inflatable seats or seat parts

References

Limiting references

This place does not cover:

Lumbar supports using inflatable bladders	B60N 2/665
Coach-like constructions with air or fluid cushions	B60N 2/7082
Arrangement or mounting of air bags in vehicle seats	B60R 21/207

B60N 2/4435

{rotatable}

Definition statement

This place covers:

Rotatable positioning and locking means not provided for in the previous groups of this subclass, e.g. not part of an adjustment mechanism for particular seat parts.

Illustrative example of subject matter classified in this group.

Fig. 2

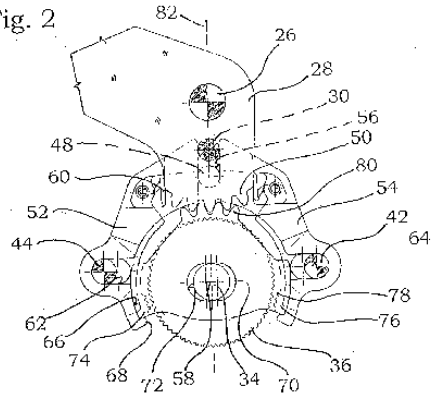

Fig. 4

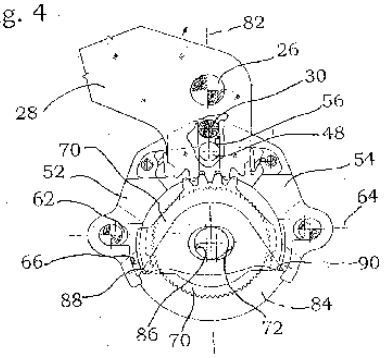

B60N 2/444

{and provided with braking systems}

Definition statement

This place covers:

Illustrative example of subject matter classified in this group.

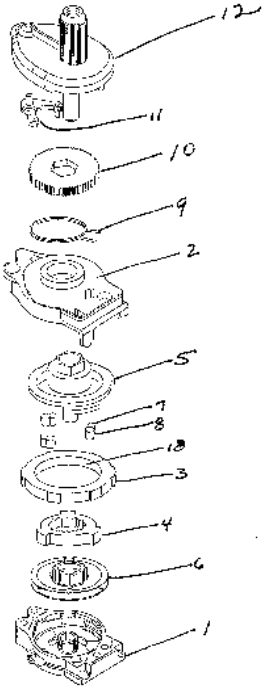

B60N 2/4445

{Stepwise movement mechanisms, e.g. ratchets (ratchets in general G05G 7/06)}

Definition statement

This place covers:

Illustrative example of subject matter classified in this group.

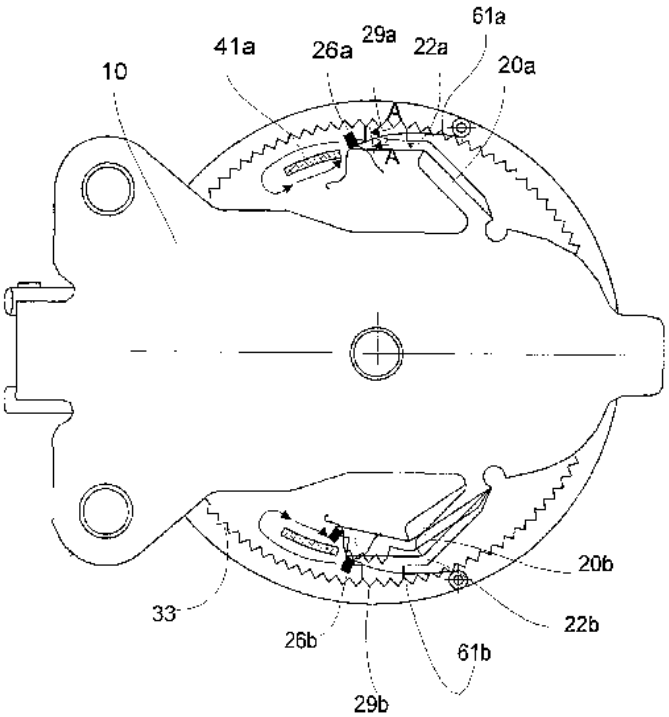

B60N 2/449

{Side-rests (B60N 2/2872, B60N 2/4882 take precedence)}

Definition statement

This place covers:

Illustrative example of subject matter classified in this group.

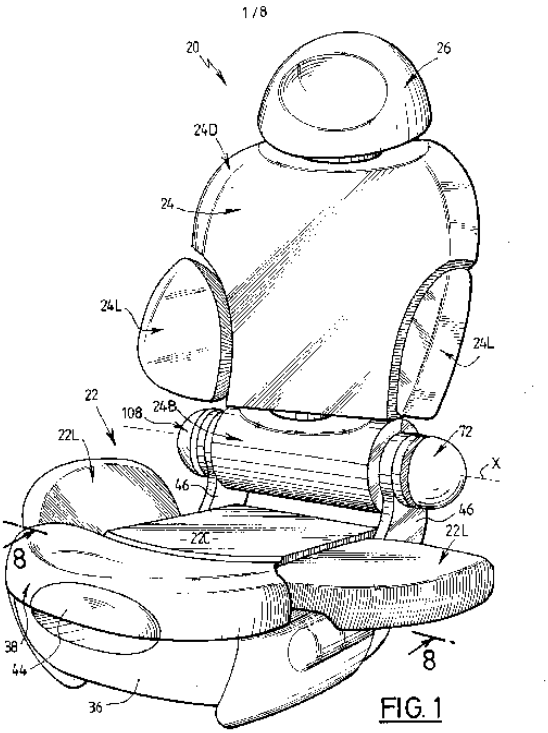

FIG. 1

B60N 2/4495

{Lower-leg-rests, e.g. calf-rests}

Definition statement

This place covers:

Illustrative example of subject matter classified in this group.

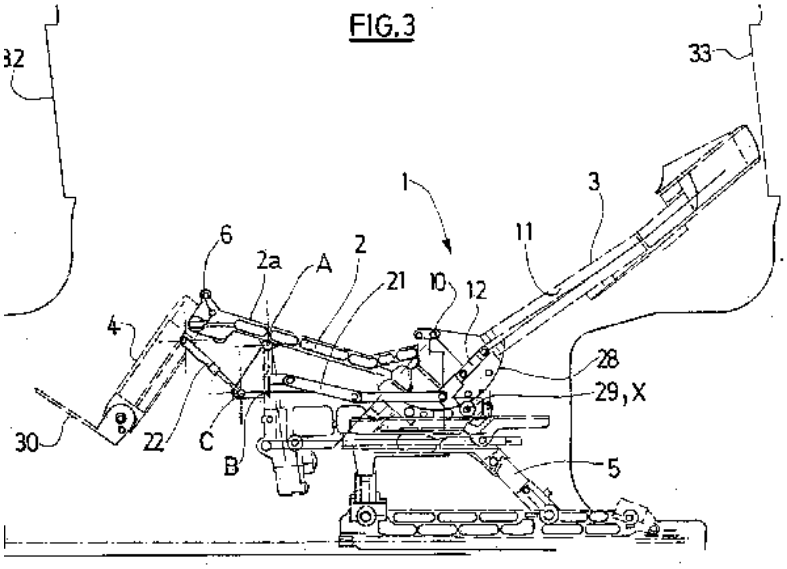

References

Limiting references

This place does not cover:

Thigh rests	B60N 2/62
Calf or footrests being attached to the floor	B60N 3/06

Glossary of terms

In this place, the following terms or expressions are used with the meaning indicated:

Lower leg rest	Calf or foot rest, being attached to the seat (not to the floor)

B60N 2/4613

{in a recess of the back-rest}

Definition statement

This place covers:

Illustrative example of subject matter classified in this group.

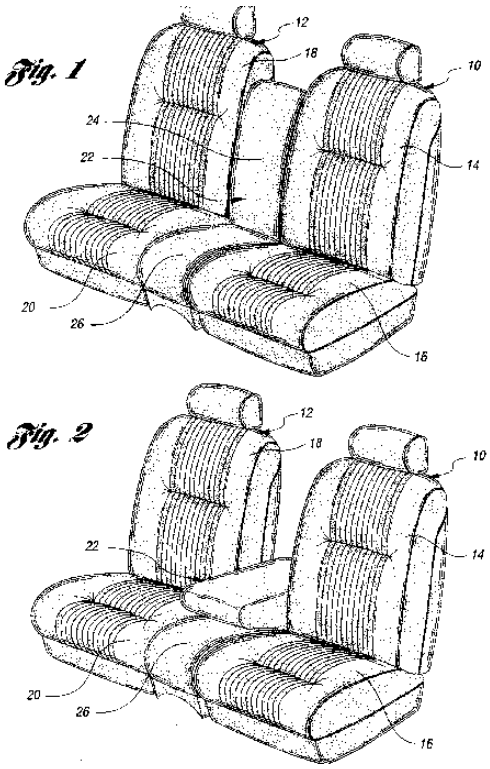

B60N 2/462

{in a recess of the cushion}

Definition statement

This place covers:

Illustrative example of subject matter classified in this group.

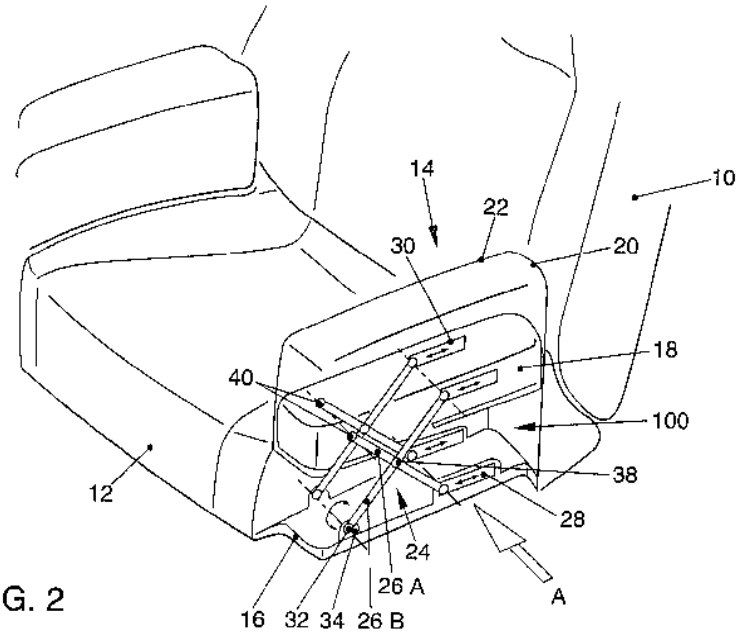

FIG. 2

B60N 2/4633

{Angle adjustment}

Definition statement

This place covers:

Illustrative example of subject matter classified in this group.

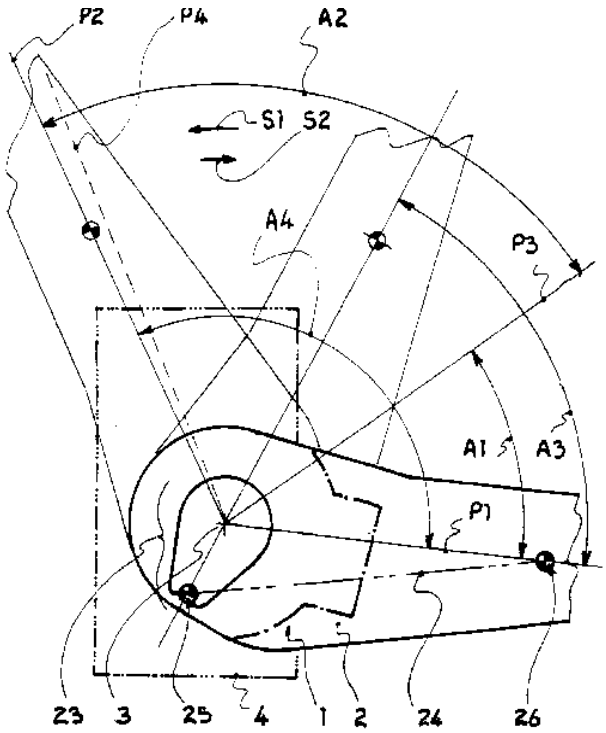

B60N 2/464

{Height adjustment}

Definition statement

This place covers:

Illustrative example of subject matter classified in this group.

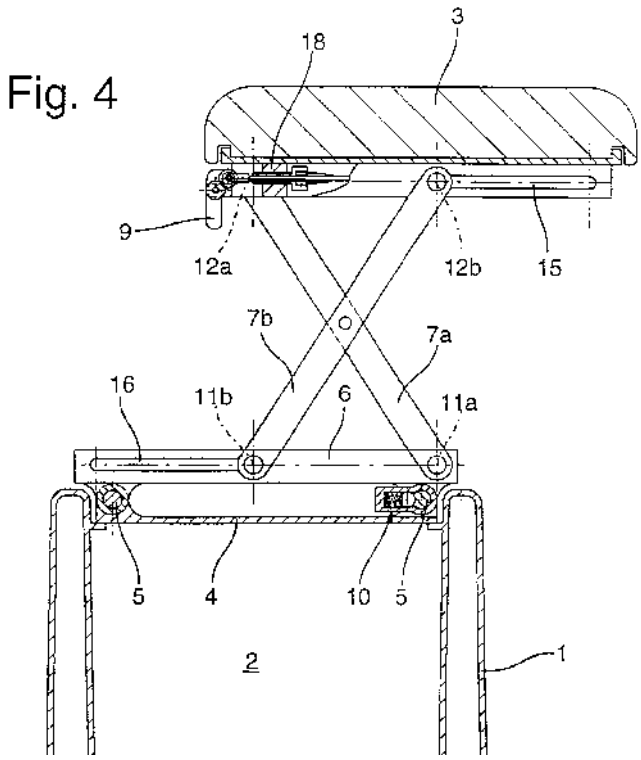

B60N 2/4653

{Transversal adjustment}

Definition statement

This place covers:

Illustrative example of subject matter classified in this group.

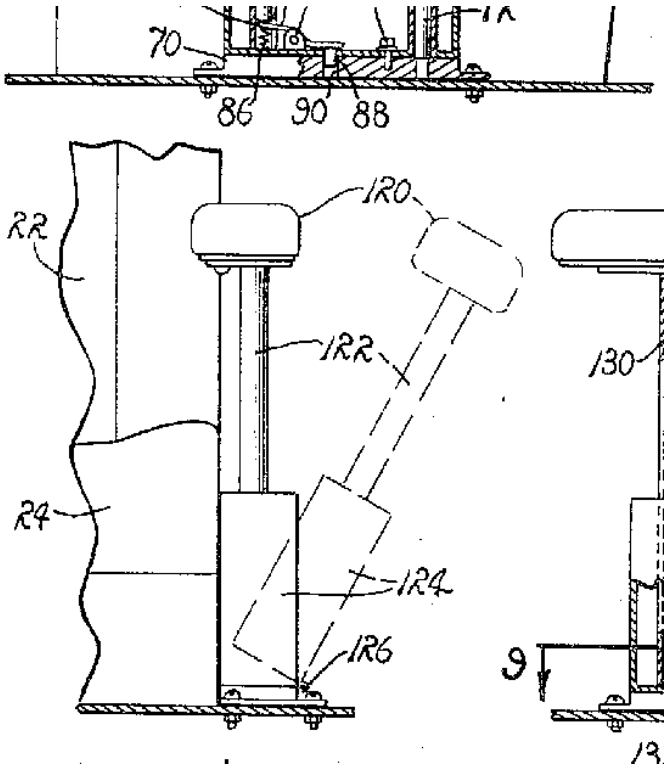

B60N 2/4666

{sill suspended, e.g. window sill}

Definition statement

This place covers:

Illustrative example of subject matter classified in this group.

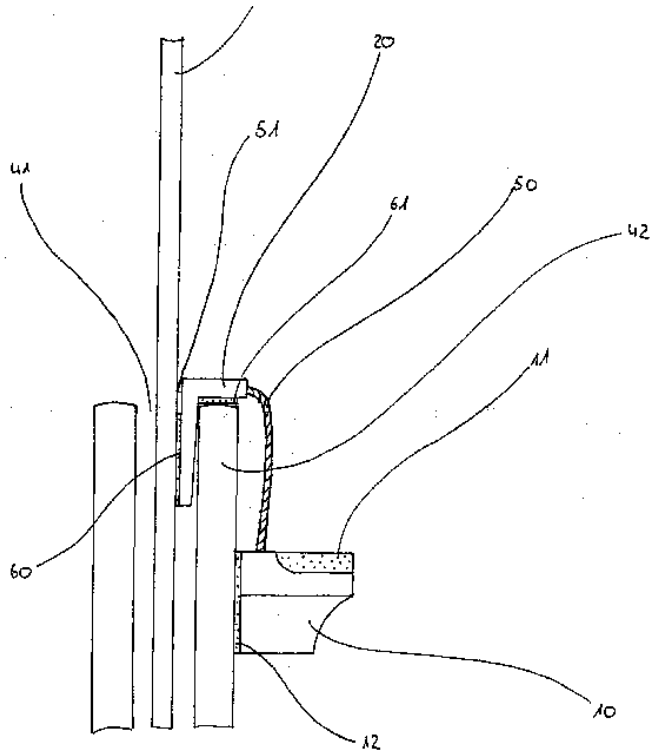

B60N 2/4686

{for use as storage compartments}

Definition statement

This place covers:

Illustrative example of subject matter classified in this group.

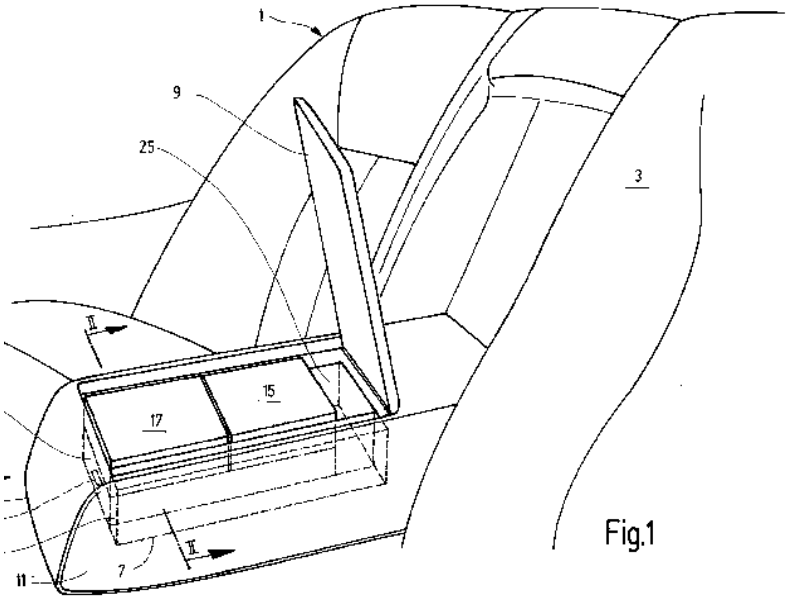

Fig.1

B60N 2/4693

{for use as electrical control means, e.g. switches}

Definition statement

This place covers:

Illustrative example of subject matter classified in this group.

FIG. 3

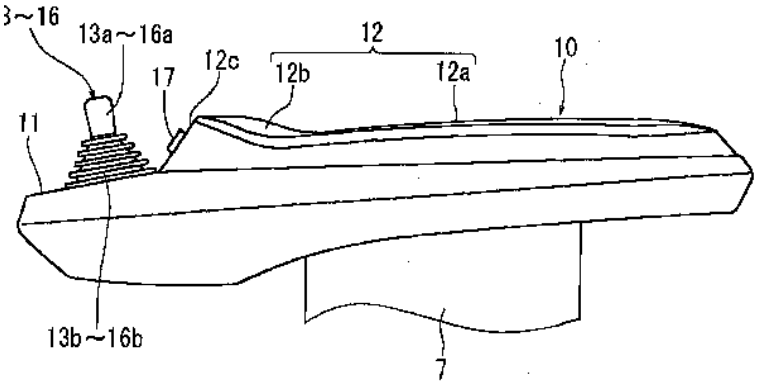

B60N 2/4802

{fixed (B60N 2/487 and B60N 2/4876 take precedence)}

Definition statement

This place covers:

Illustrative example of subject matter classified in this group.

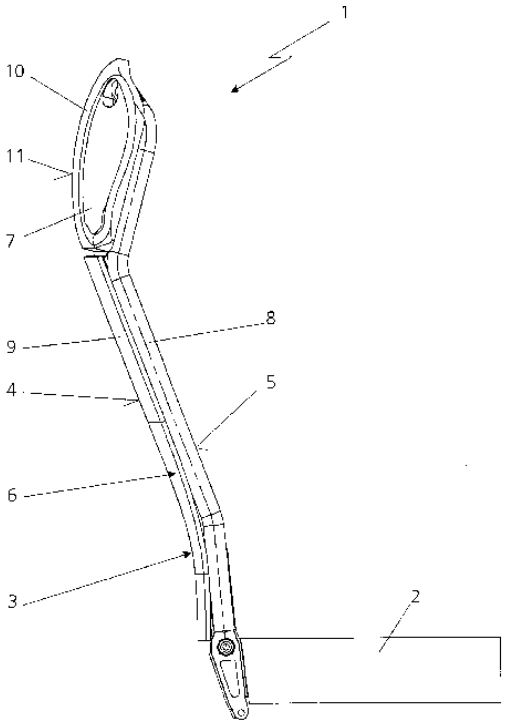

B60N 2/4814

{Release mechanism, e.g. buttons}

Definition statement

This place covers:

Illustrative example of subject matter classified in this group.

Fig. 1

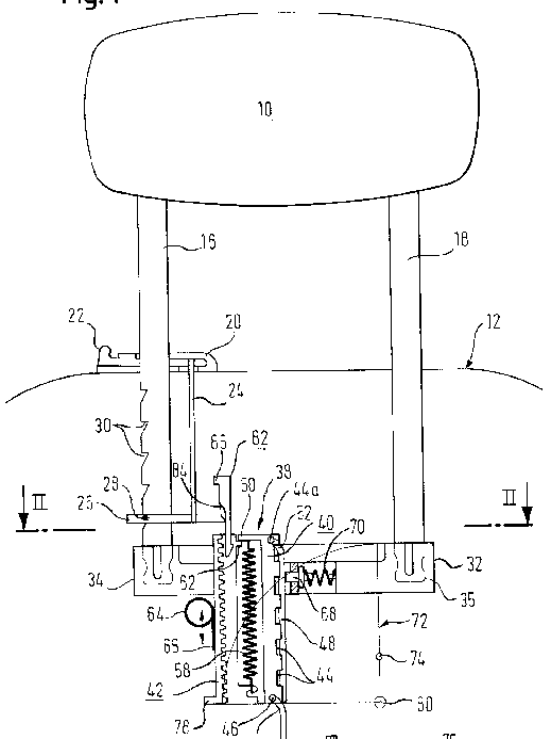

B60N 2/4817

{Stepwise positioning}

Definition statement

This place covers:

Illustrative example of subject matter classified in this group.

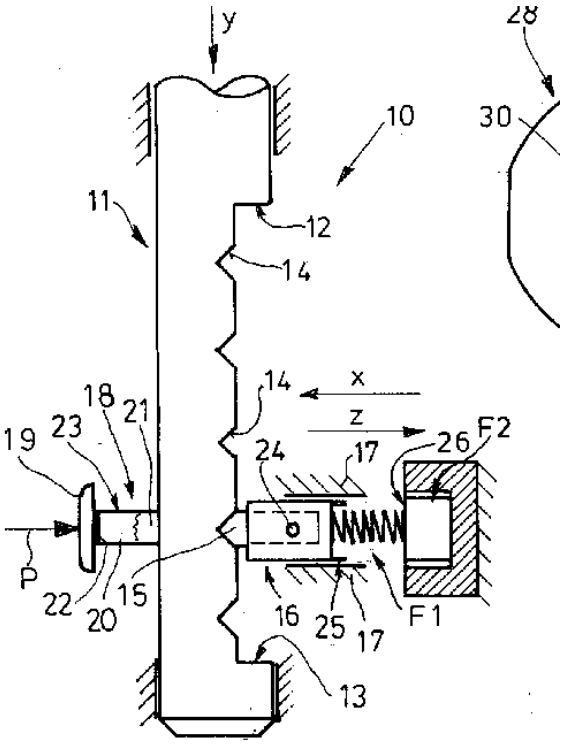

B60N 2/4823

{using springs}

Definition statement

This place covers:

Illustrative example of subject matter classified in this group.

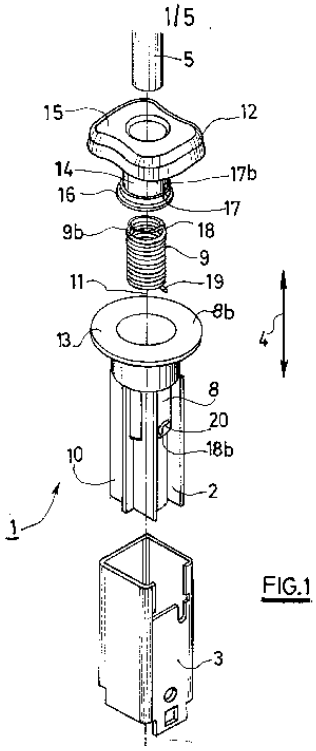

FIG.1

B60N 2/4826

{using elastic materials}

Definition statement

This place covers:

Slidable adjustment of head-rests characterised by locking means using elastic material for continous positioning.

Illustrative example of subject matter classified in this group.

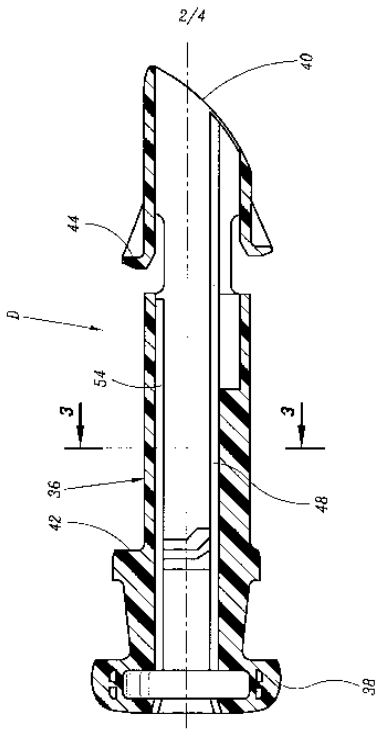

FIG.2

B60N 2/4829

{characterised by adjusting mechanism, e.g. electric motors}

Definition statement

This place covers:

Illustrative example of subject matter classified in this group.

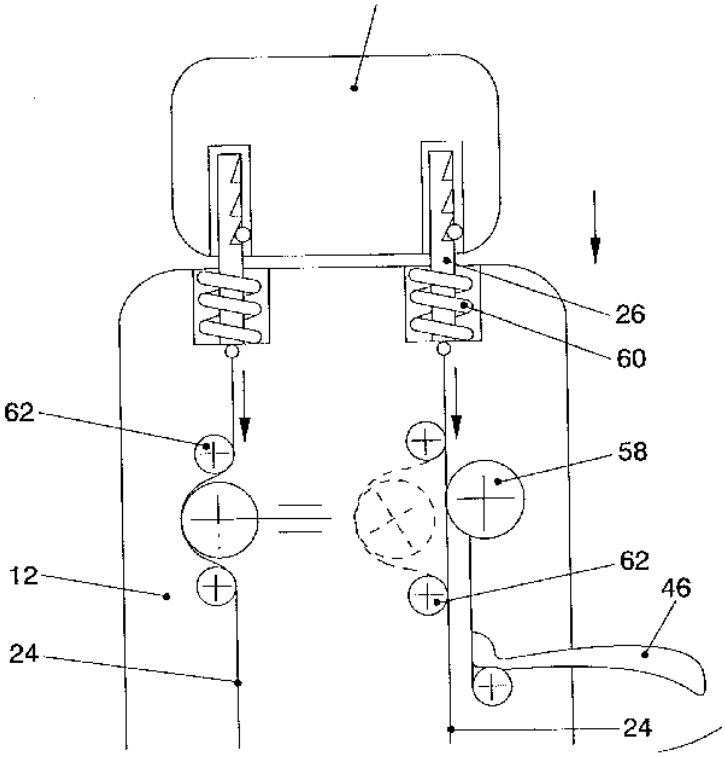

B60N 2/4832

{movable to an inoperative position}

Definition statement

This place covers:

Illustrative example of subject matter classified in this group.

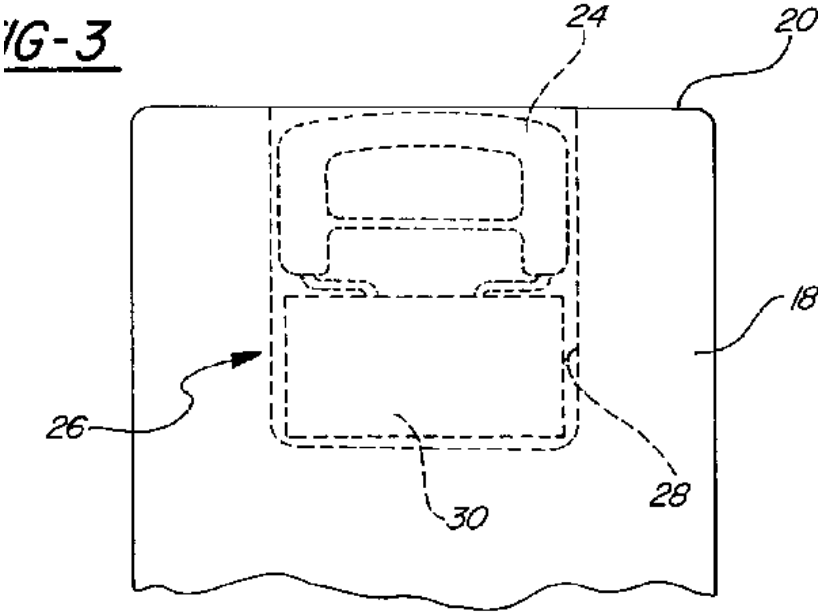

B60N 2/4835

{for rear seats}

Definition statement

This place covers:

Illustrative example of subject matter classified in this group.

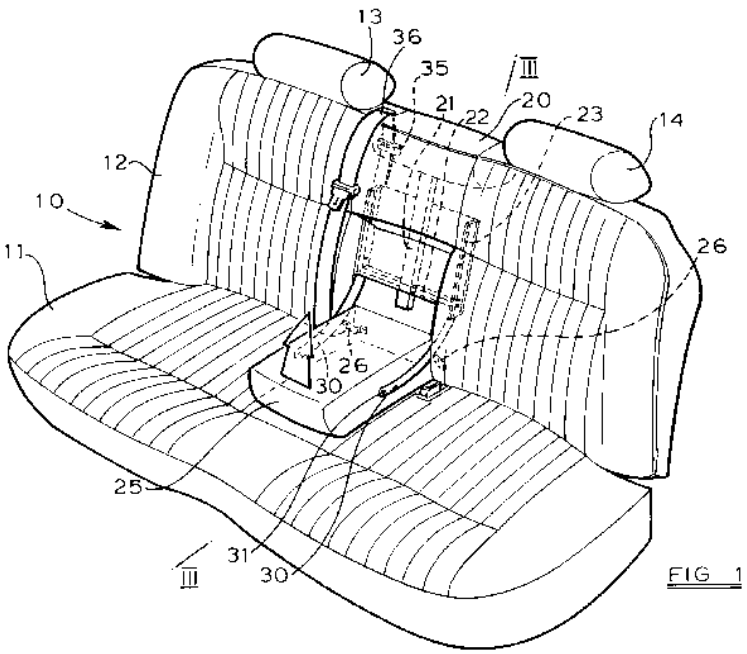

B60N 2/4844

{Release mechanism, e.g. buttons}

Definition statement

This place covers:

Illustrative example of subject matter classified in this group.

.

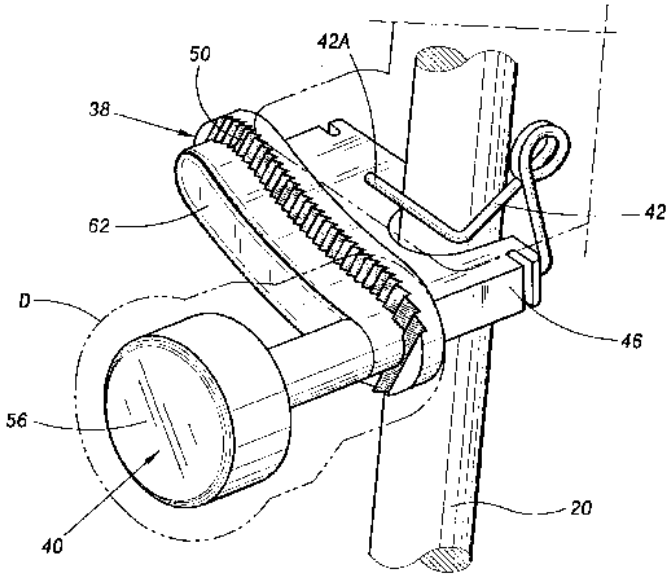

FIG.5

B60N 2/4847

{Stepwise positioning}

Definition statement

This place covers:

Illustrative example of subject matter classified in this group.

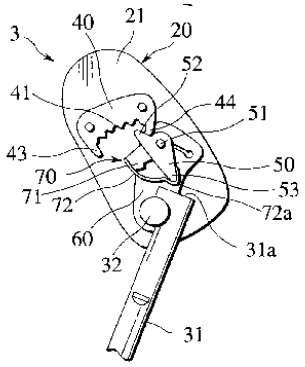

FIG.6

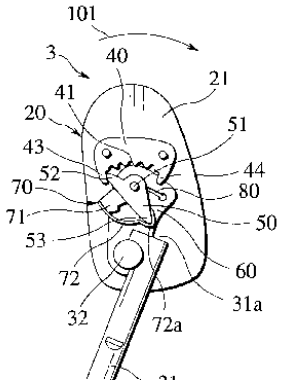

B60N 2/4852

{characterised by the adjusting mechanism, e.g. electric motors}

Definition statement

This place covers:

Illustrative example of subject matter classified in this group.

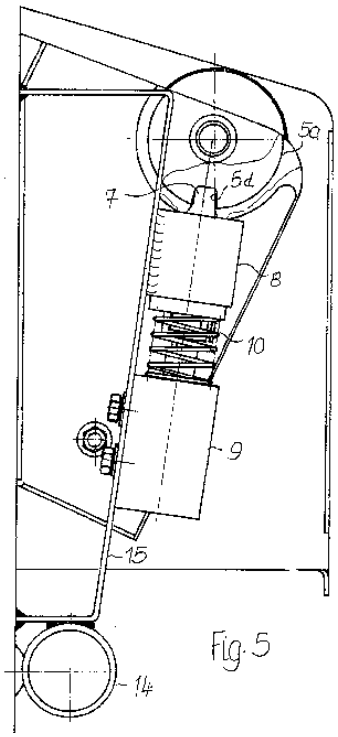

Fig. 5

B60N 2/4858

{for rear seats}

Definition statement

This place covers:

Illustrative example of subject matter classified in this group.

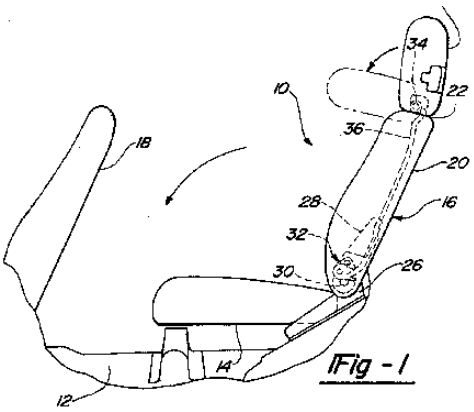

Fig - 1

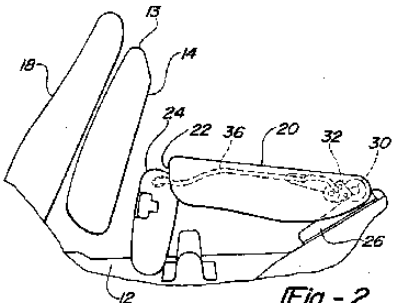

Fig - 2

B60N 2/4861

{provided with attitude keeping devices, e.g. parallelogram mechanism}

Definition statement

This place covers:

Illustrative example of subject matter classified in this group.

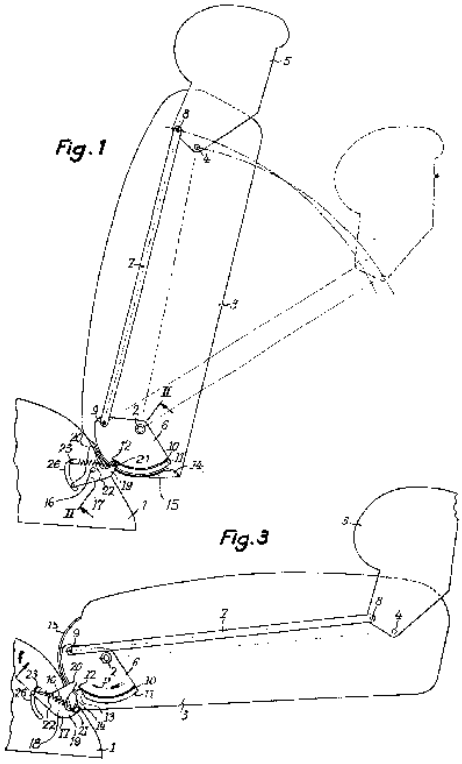

B60N 2/4864

{longitudinally movable}

Definition statement

This place covers:

Illustrative example of subject matter classified in this group.

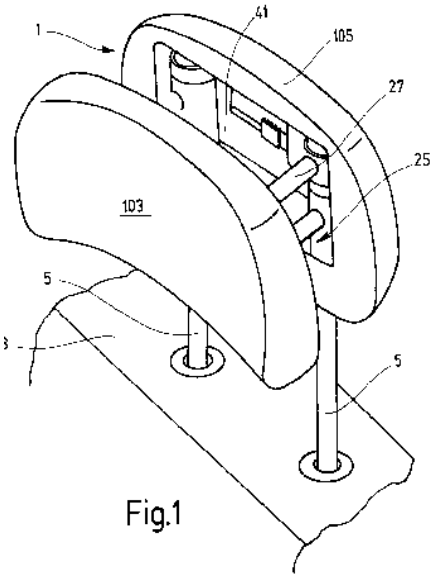

Fig.1

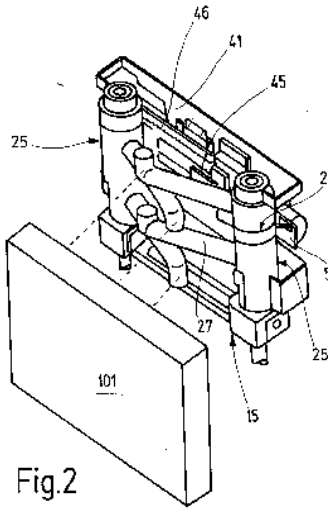

Fig.2

B60N 2/4867

{transversally movable}

Definition statement

This place covers:

Illustrative example of subject matter classified in this group.

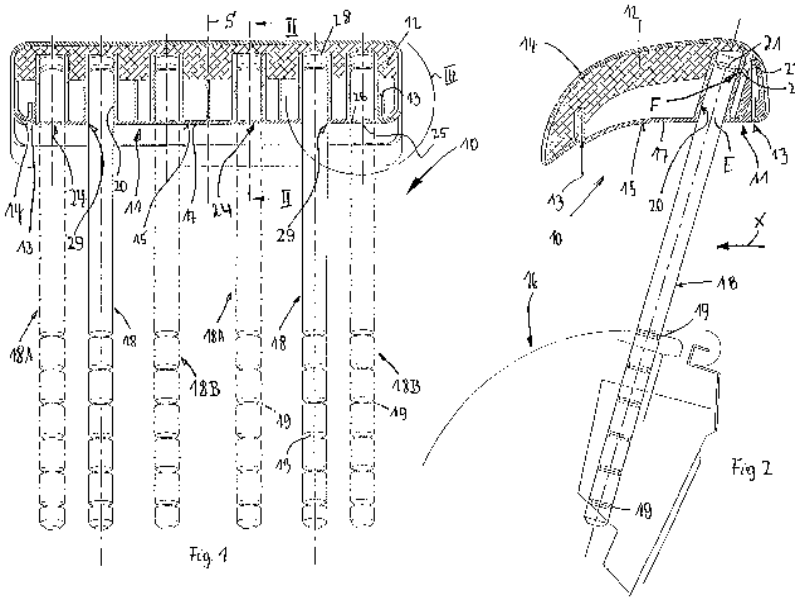

B60N 2/487

{movable to an inoperative position (B60N 2/4832, B60N 2/4855 take precedence)}

Definition statement

This place covers:

Illustrative example of subject matter classified in this group.

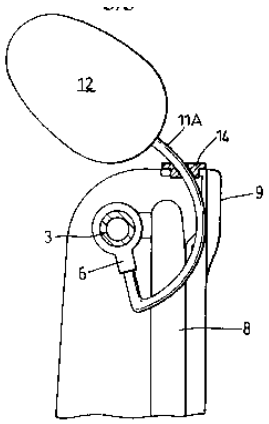

Fig. 3

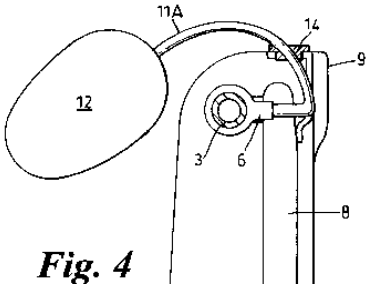

Fig. 4

B60N 2/4876

{with diverse use, e.g. loud-speakers, magnetic devices, heating or cooling devices (roll-over protection B60R 21/13)}

Definition statement

This place covers:

Illustrative example of subject matter classified in this group.

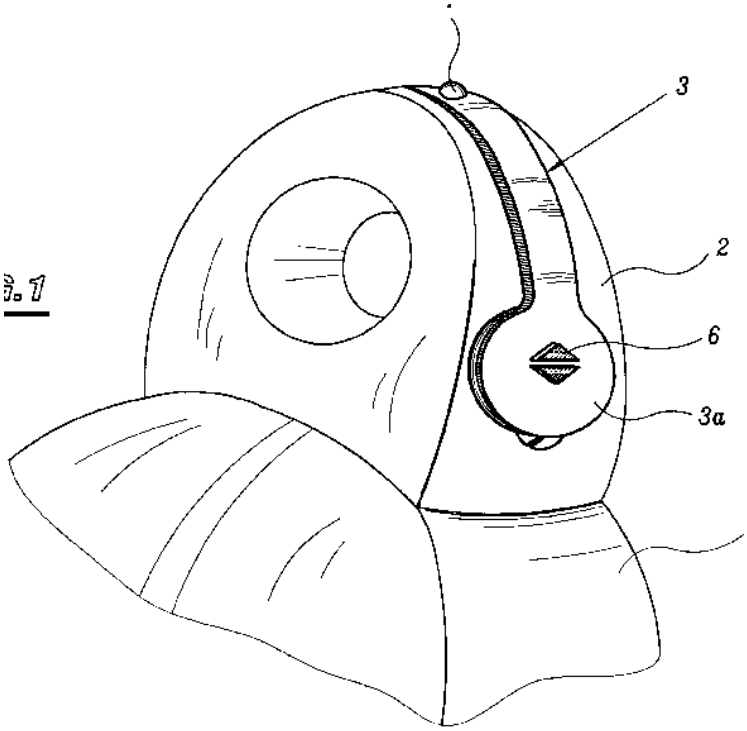

B60N 2/4882

{provided with side rests}

Definition statement

This place covers:

Illustrative example of subject matter classified in this group.

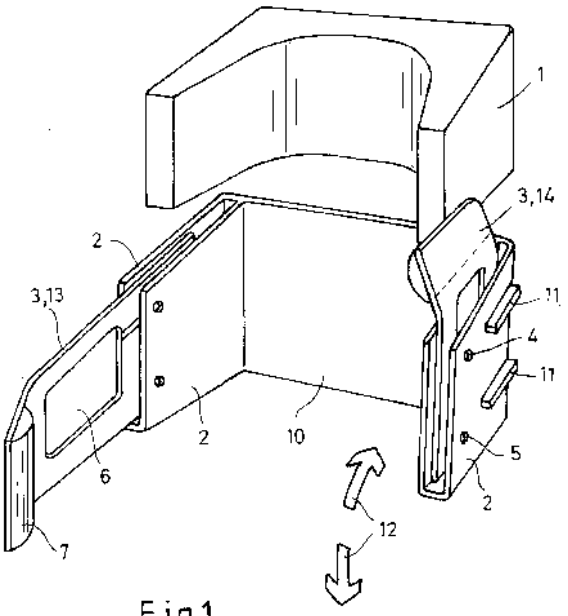

Fig.1

B60N 2/4885

{with protection systems against abnormal g-forces, e.g. the headrest or the higher part of the back-rest displacing}

Definition statement

This place covers:

Illustrative example of subject matter classified in this group.

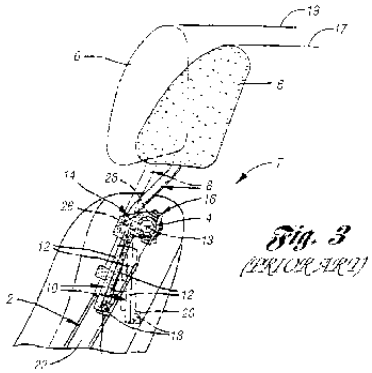

Fig. 3
(PRIOR ART)

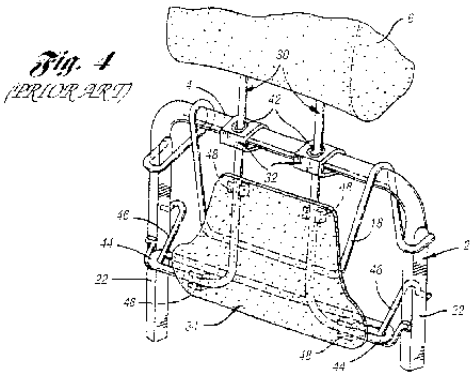

Fig. 4
(PRIOR ART)

B60N 2/50

Seat suspension devices

Definition statement

This place covers:

Illustrative example of subject matter classified in this group.

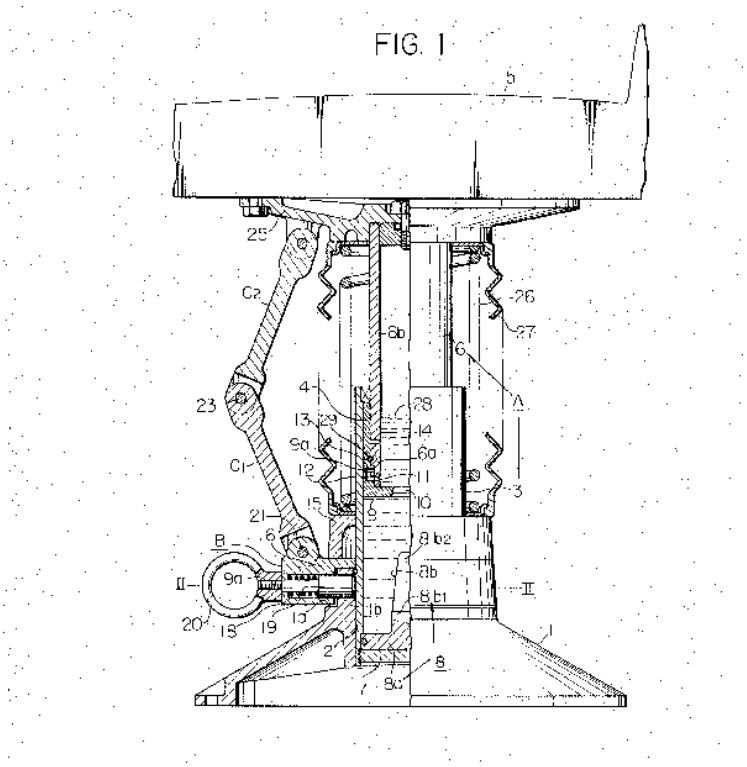

References

Limiting references

This place does not cover:

Vehicle suspension arrangements	B60G

B60N 2/54

using mechanical springs {(springs in general F16F)}

Definition statement

This place covers:

Illustrative example of subject matter classified in this group.

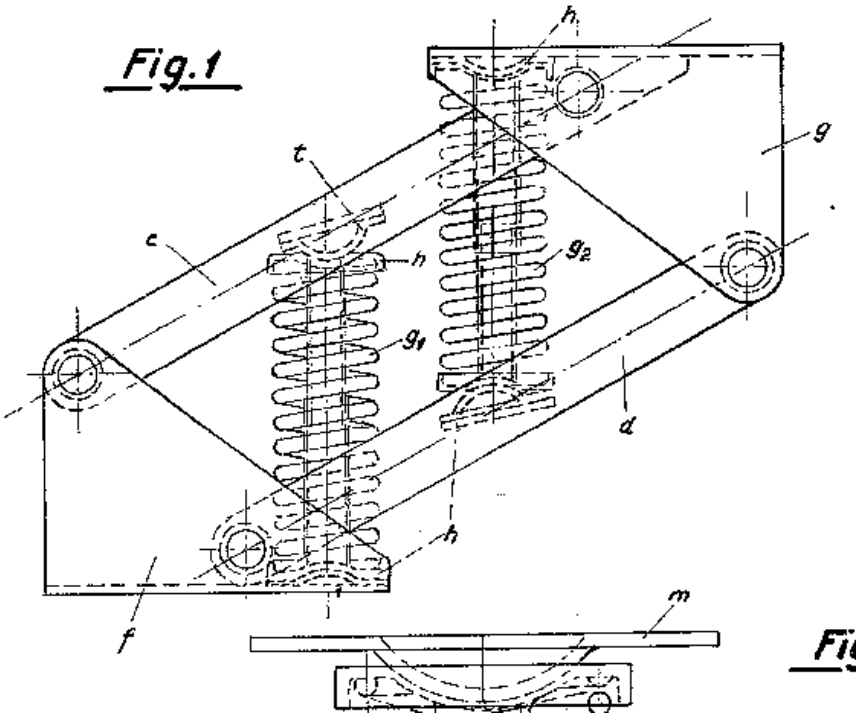

B60N 2/5614

{by liquid}

Definition statement

This place covers:

Illustrative example of subject matter classified in this group.

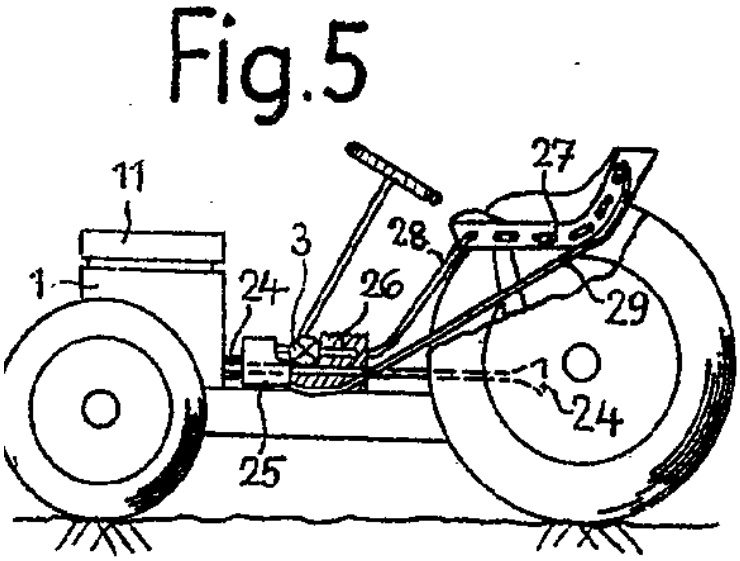

B60N 2/5628

{coming from the vehicle ventilation system, e.g. air-conditioning system}

Definition statement

This place covers:

Illustrative example of subject matter classified in this group.

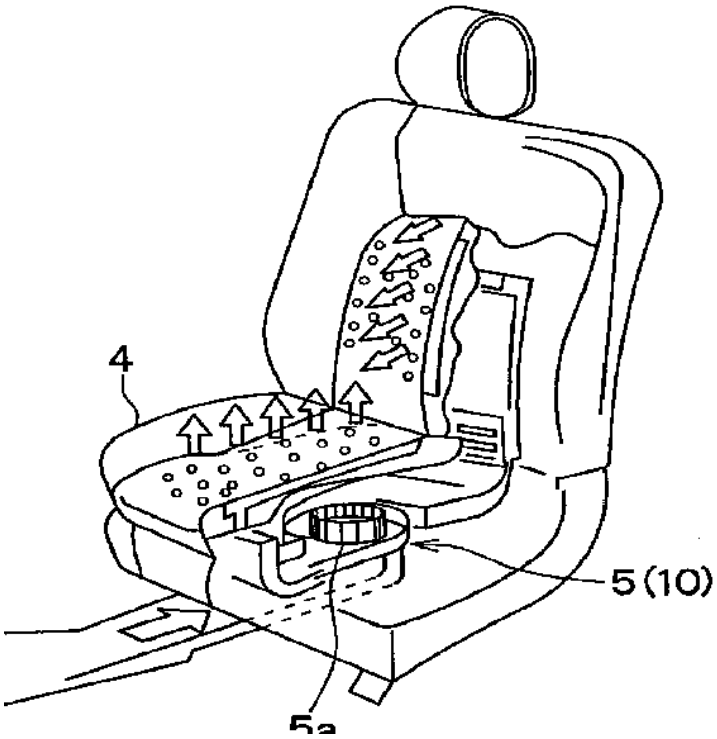

B60N 2/5685

{Resistance}

Definition statement

This place covers:

Illustrative example of subject matter classified in this group.

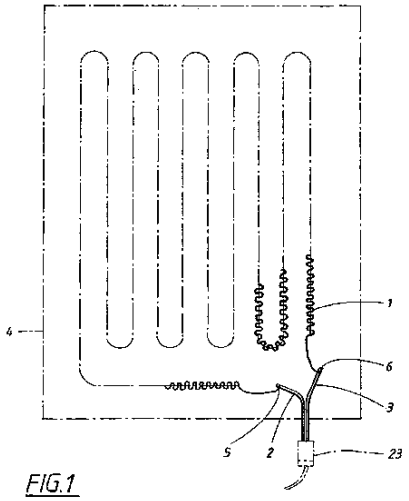

FIG.1

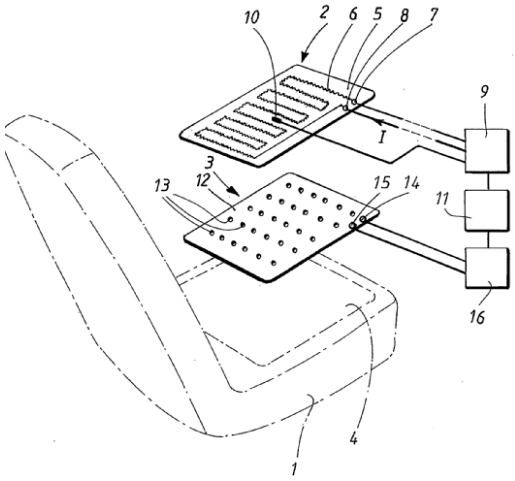

B60N 2/5692

{Refrigerating means}

Definition statement

This place covers:

Illustrative example of subject matter classified in this group.

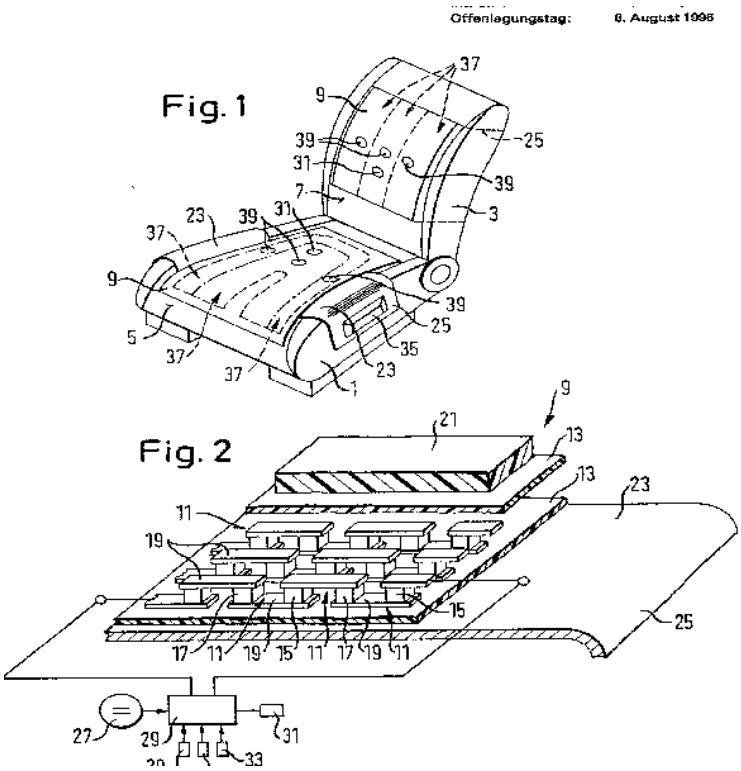

B60N 2/58

Seat coverings

Definition statement

This place covers:

Seat coverings which come with the car as produced by the car manufacturer.

References

Limiting references

This place does not cover:

Removable protective coverings, meaning additional coverings (additional with respect to the coverings of B60N 2/58) which are removable by quick release means	B60N 2/60

B60N 2/5825

{by hooks, staples, clips, snap fasteners or the like}

Definition statement

This place covers:

Illustrative example of subject matter classified in this group.

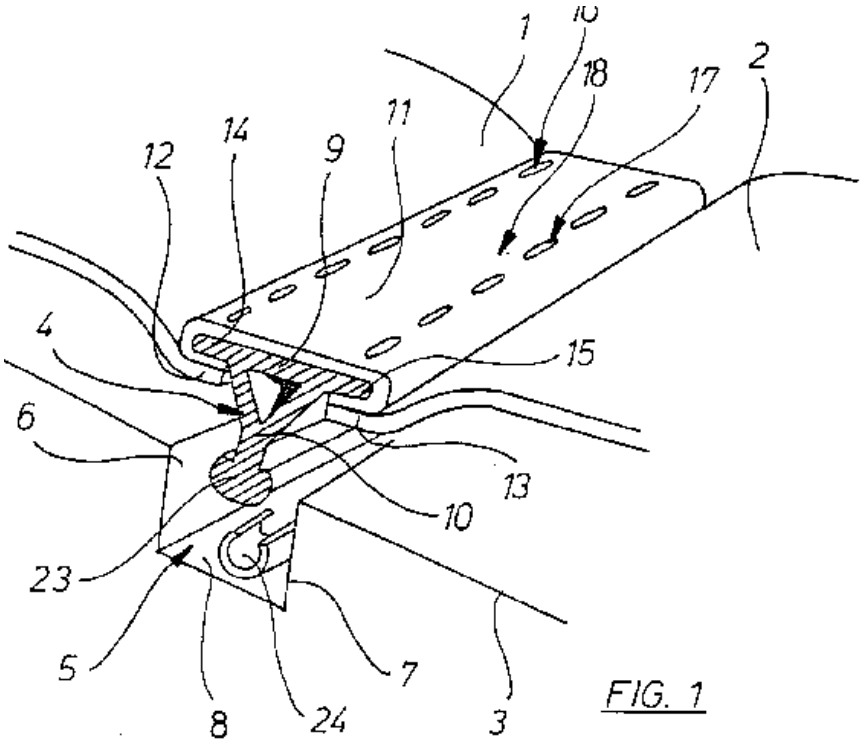

FIG. 1

B60N 2/5833

{by hook-and-loop type fasteners}

Definition statement

This place covers:

Illustrative example of subject matter classified in this group.

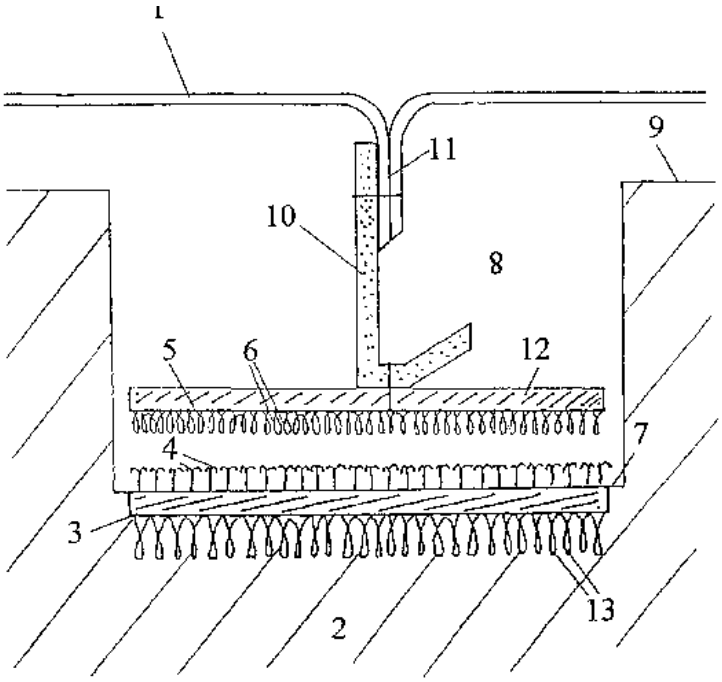

B60N 2/585

{by buckle passages}

Definition statement

This place covers:

Illustrative example of subject matter classified in this group.

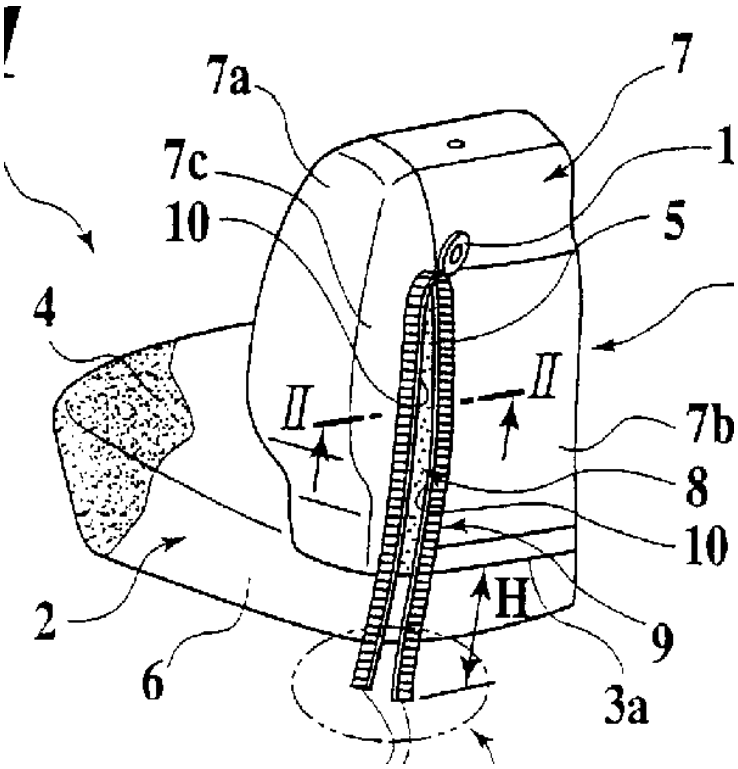

B60N 2/5858

{by elastic means}

Definition statement

This place covers:

Illustrative example of subject matter classified in this group.

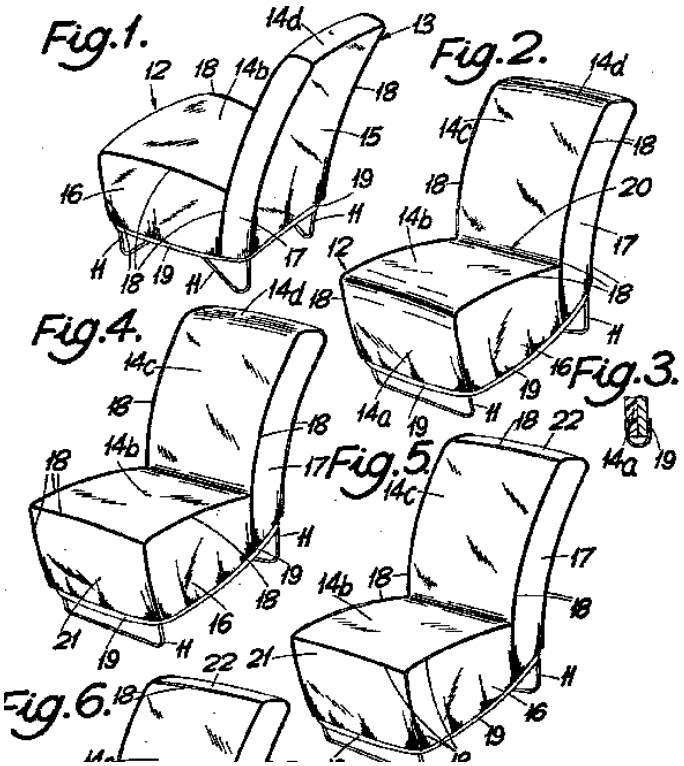

B60N 2/5866

{by thermal welding}

Definition statement

This place covers:

Illustrative example of subject matter classified in this group.

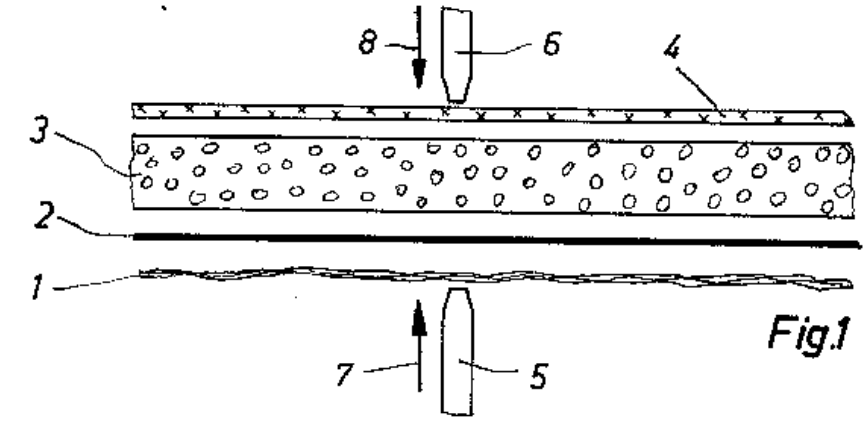

Fig.1

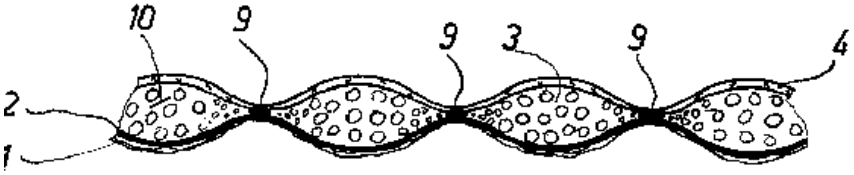

Fig.2

B60N 2/5875

{by adhesion, e.g. gluing}

Definition statement

This place covers:

Illustrative example of subject matter classified in this group.

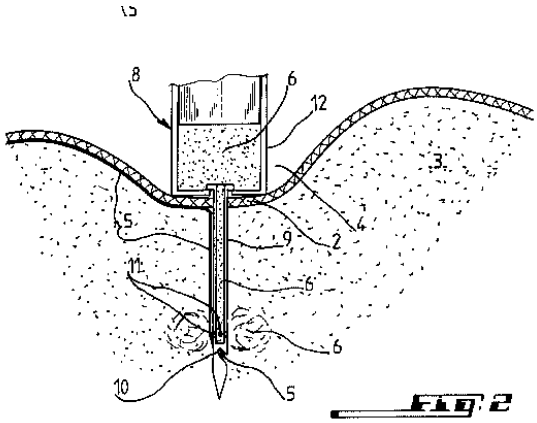

FIG. 2

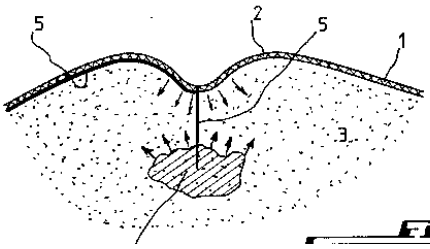

FIG. 3

B60N 2/5883

{by sewing, stitching or threading}

Definition statement

This place covers:

Illustrative example of subject matter classified in this group.

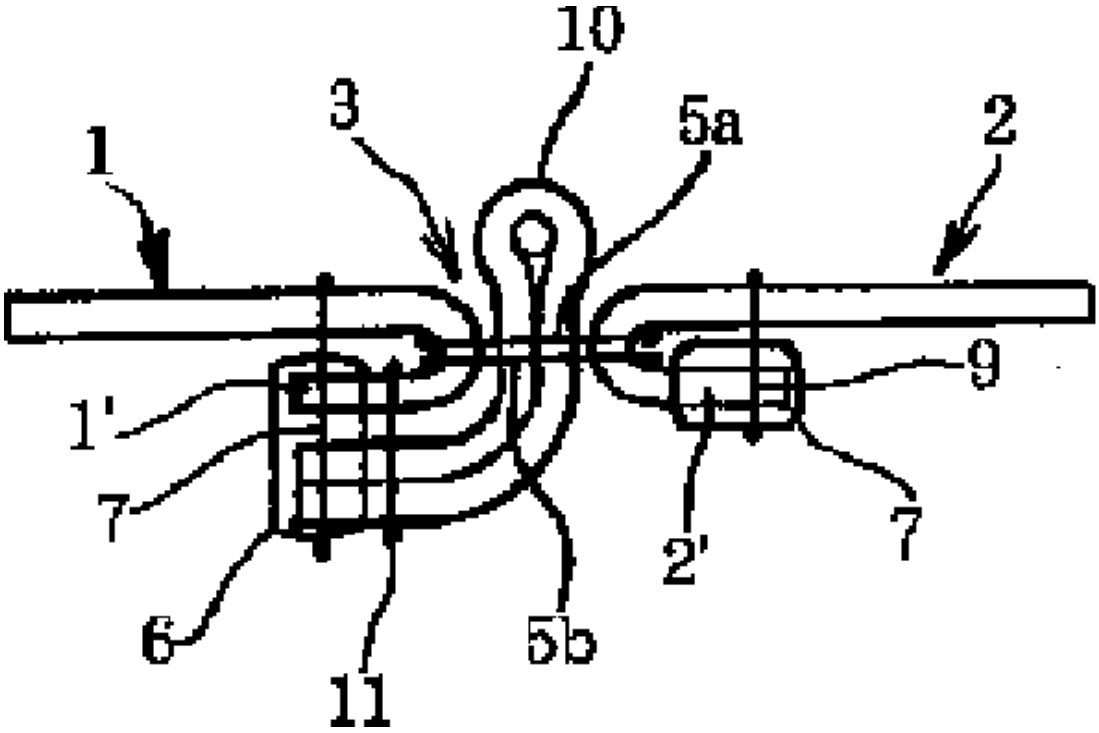

B60N 2/5891

{Manufacturing methods specially adapted therefor (manufacturing of seat covers in general A47C 3/00)}

Definition statement

This place covers:

Illustrative example of subject matter classified in this group.

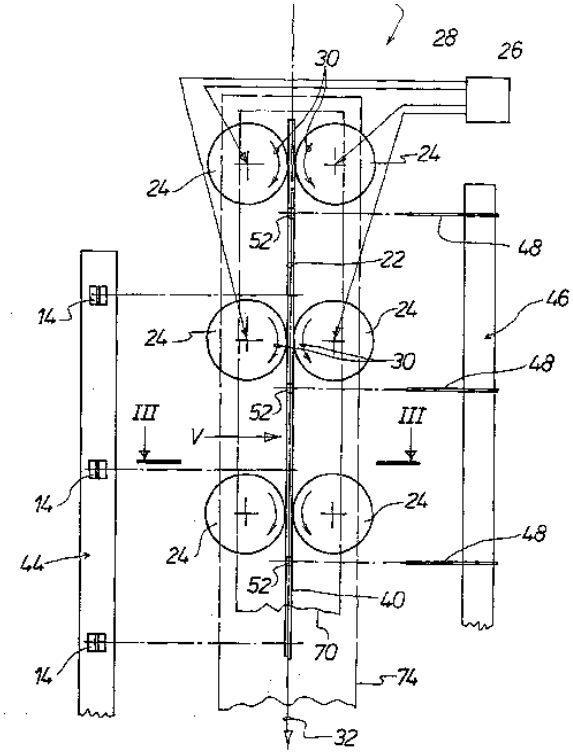

B60N 2/60

Removable protective coverings

Glossary of terms

In this place, the following terms or expressions are used with the meaning indicated:

Removable protective coverings	meaning additional coverings (additional with respect to the coverings of B60N 2/58) which are removable by quick release means

B60N 2/6009

{covering more than only the seat}

Glossary of terms

In this place, the following terms or expressions are used with the meaning indicated:

More than the seat	more than the cushion and the back-rest e.g. the region between the cushion and the floor e.g. the legs connecting thew cushion to the floor

B60N 2/62

Thigh-rests {(B60N 2/4415 takes precedence)}

Definition statement

This place covers:

Illustrative example of subject matter classified in this group.

FIG.5

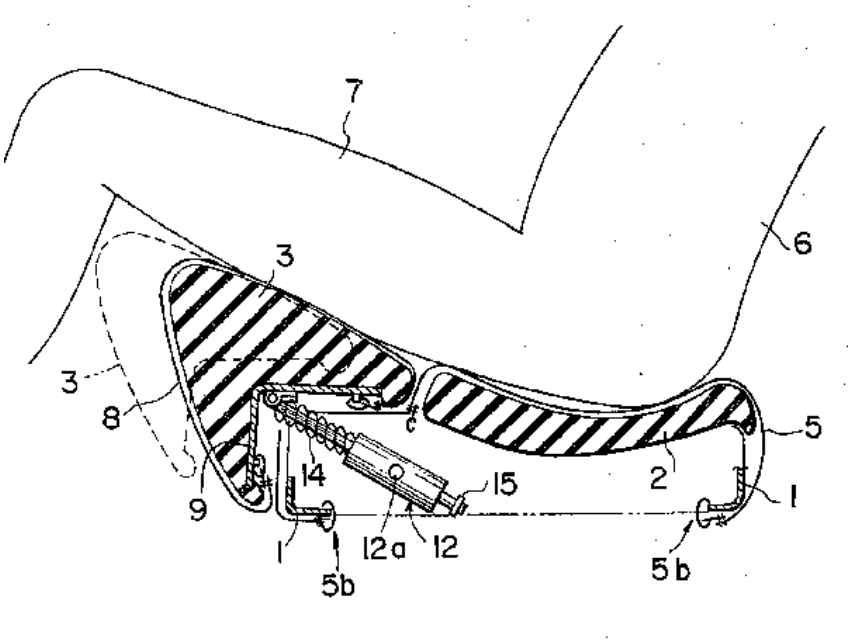

References

Limiting references

This place does not cover:

Seats with no extra thigh rest element, where the front end of the seat cushion can be lifted	B60N 2/1835, B60N 2/1839
Lower leg rests (e.g. calf rests)	B60N 2/4495

B60N 2/643

{shape of the back-rests (B60N 2/66 takes precedence)}

Definition statement

This place covers:

Illustrative example of subject matter classified in this group.

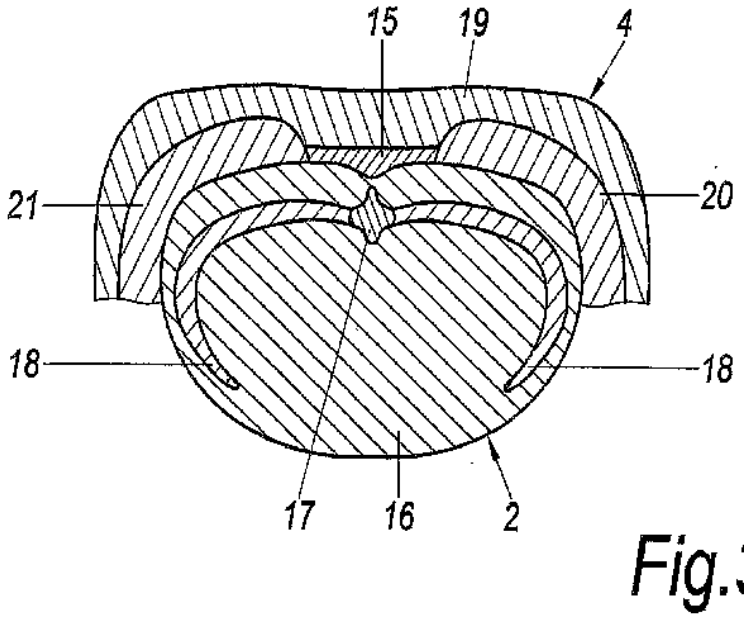

B60N 2/646

{shape of the cushion}

Definition statement

This place covers:

Illustrative example of subject matter classified in this group.

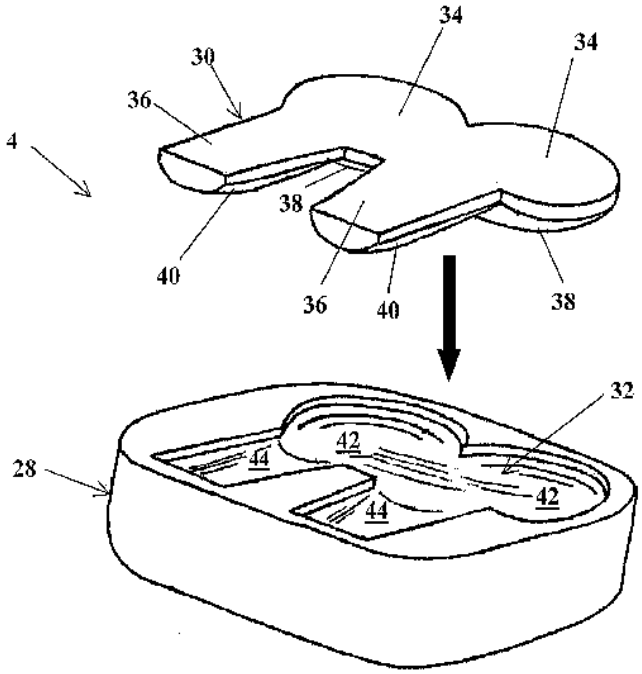

B60N 2/66

Lumbar supports

Definition statement

This place covers:

Illustrative example of subject matter classified in this group.

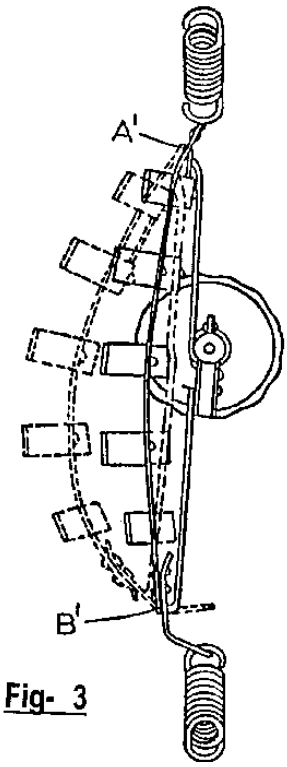

Fig- 3

B60N 2/667

{having flexible support member bowed by applied forces}

Definition statement

This place covers:

Lumbar supports that are mounted by a bendable mounting member that is curved by applying forces to the mounting member. The force could be generated by the seated person.

B60N 2/7005

{detachable}

Definition statement

This place covers:

Illustrative example of subject matter classified in this group.

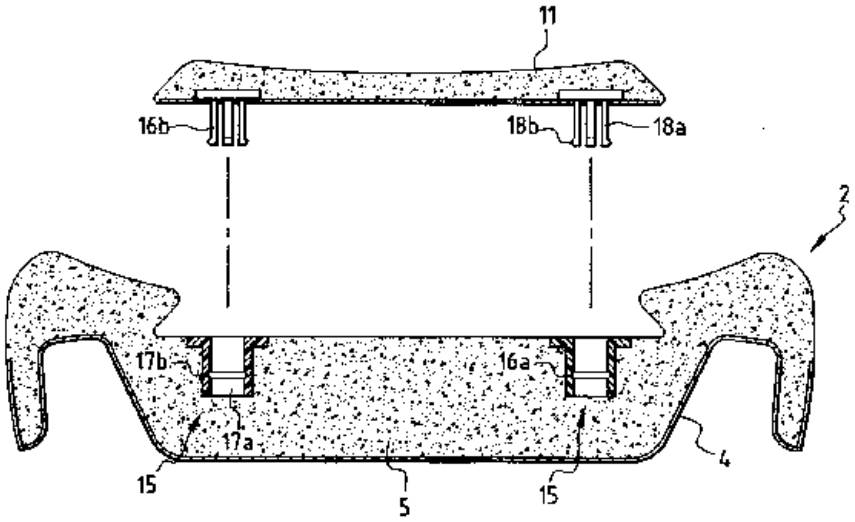

FIG.2

B60N 2/7011

{of substantially two-dimensional shape, e.g. hammock-like, plastic shells, fabrics}

Definition statement

This place covers:

Illustrative example of subject matter classified in this group.

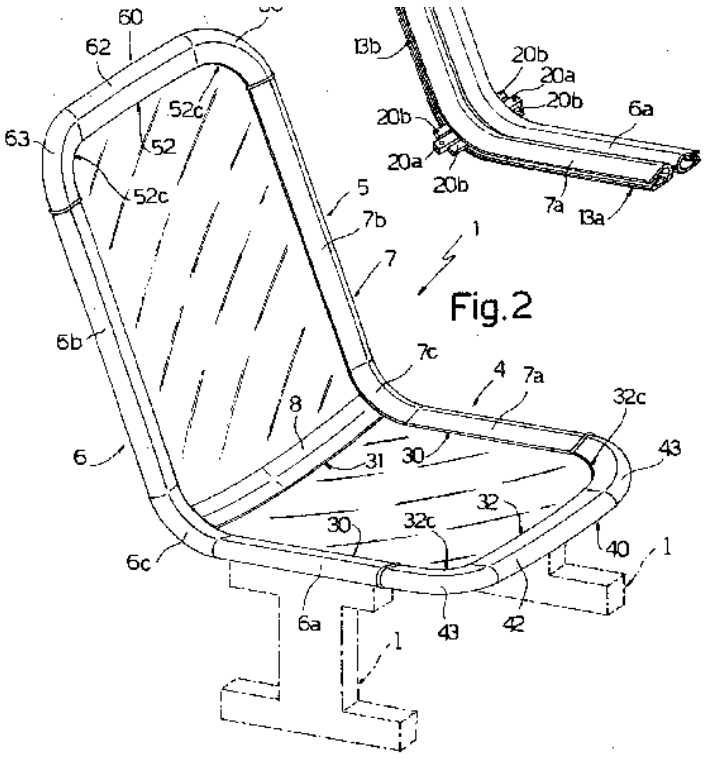

B60N 2/7017

{Manufacturing methods specially adapted therefor (manufacturing of seat upholstery in general A47C 7/00, shaping of substances in a plastic state in general B29C)}

Definition statement

This place covers:

Illustrative example of subject matter classified in this group.

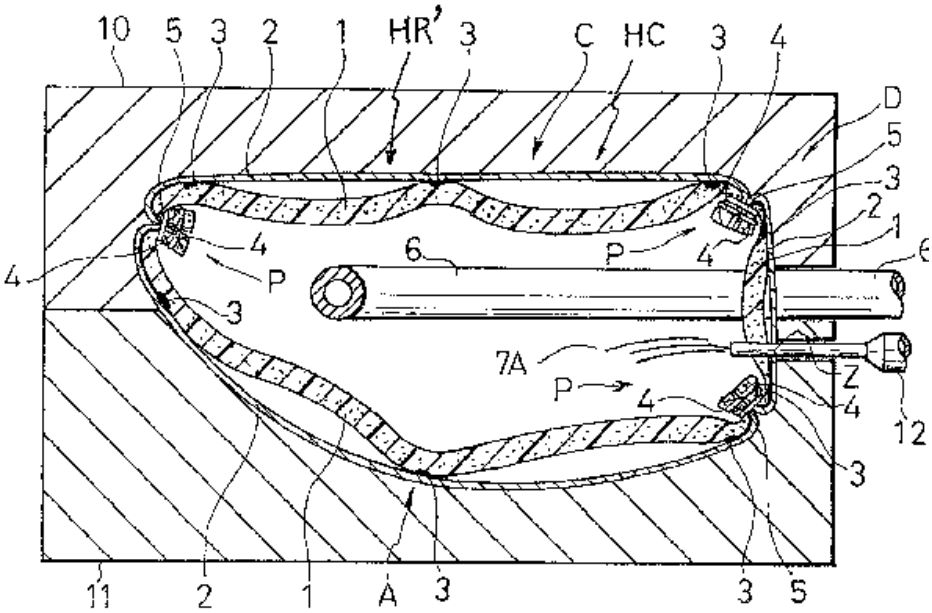

B60N 2/7023

{Coach-like constructions}

Glossary of terms

In this place, the following terms or expressions are used with the meaning indicated:

Coach like construction	"out of date" way of bolstering a seat part mainly by springs (e.g. helicoidal) instead of dampening mainly by foam

B60N 2/7029

{back-rests}

Definition statement

This place covers:

Illustrative example of subject matter classified in this group.

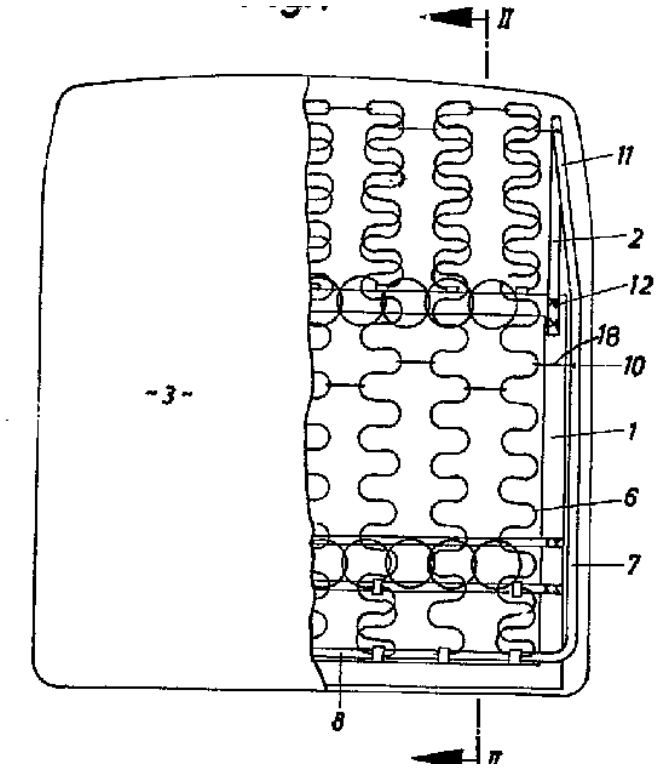

B60N 2/7041

{Fixation of covers and springs}

Definition statement

This place covers:

Illustrative example of subject matter classified in this group.

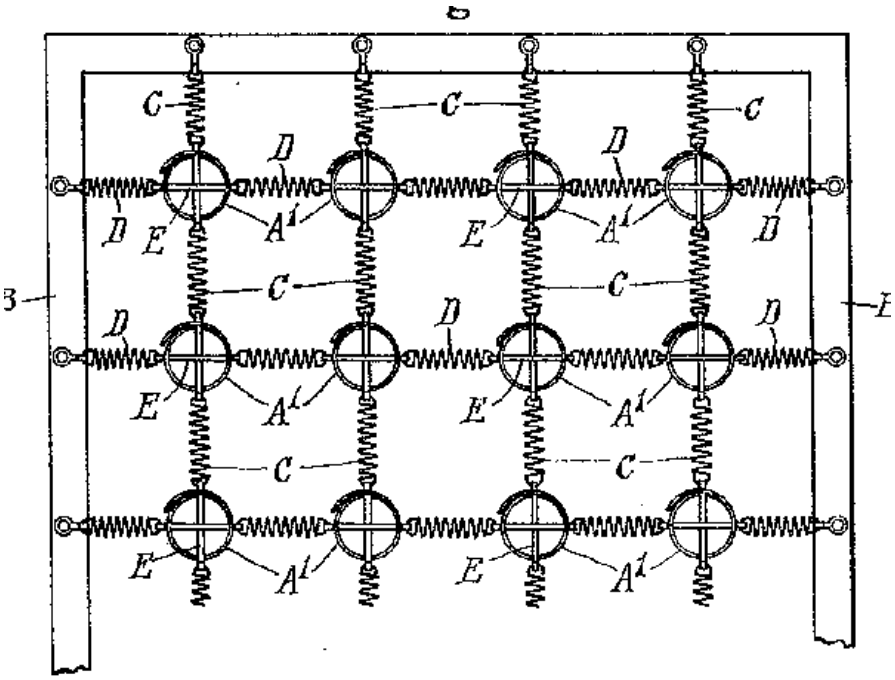

Fig. 3.

References

Limiting references

This place does not cover:

Attachments thereof	B60N 2/5816

B60N 2/7052

{Springs using a combination of metal and rubber}

Definition statement

This place covers:

Illustrative example of subject matter classified in this group.

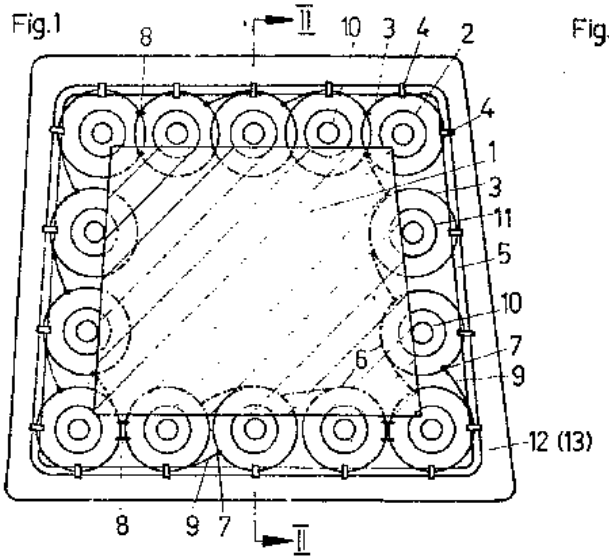

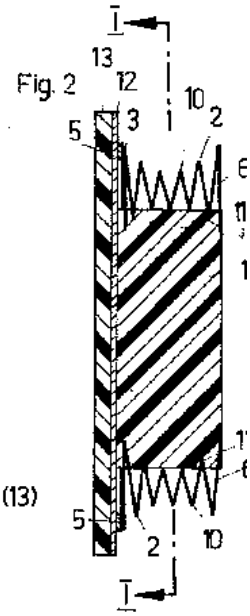

Fig.3

B60N 2/707

{with rubber blocks}

Definition statement

This place covers:

Illustrative example of subject matter classified in this group.

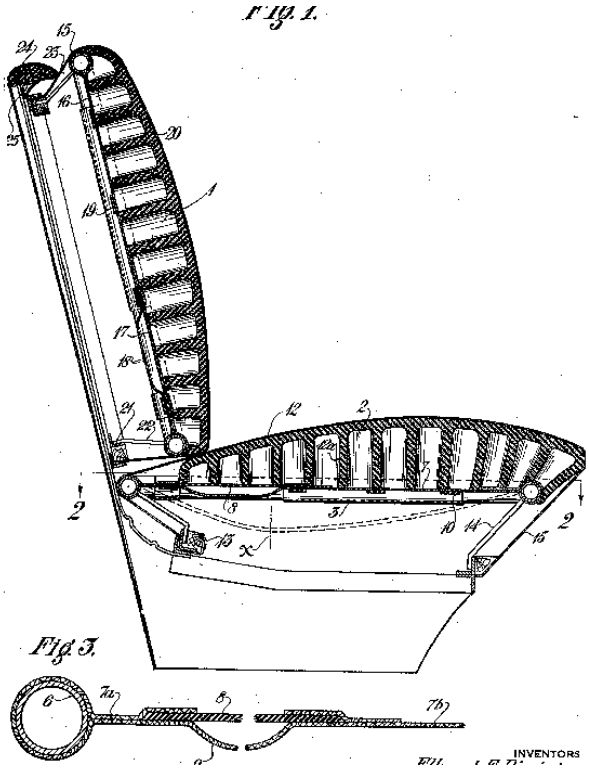

B60N 2/7094

{Upholstery springs}

Definition statement

This place covers:

Illustrative example of subject matter classified in this group.

Fig. 1

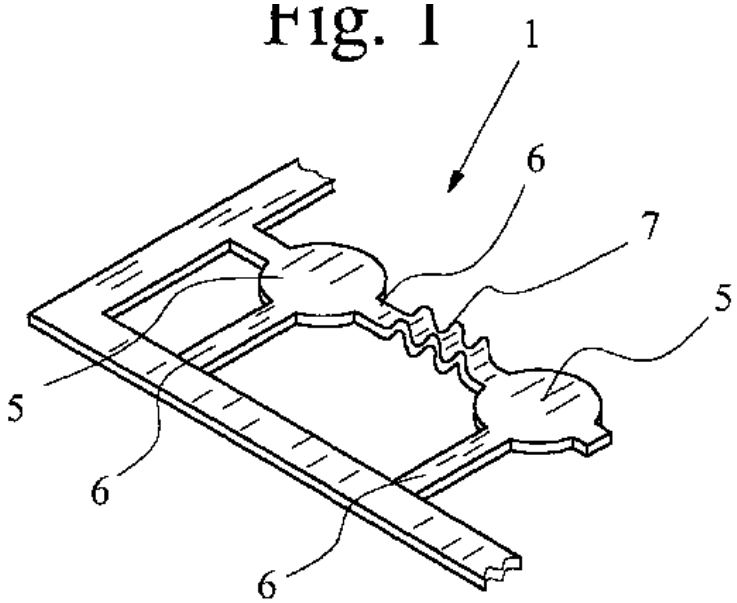

Fig. 2

B60N 2/72

Attachment or adjustment thereof

Definition statement

This place covers:

Illustrative example of subject matter classified in this group.

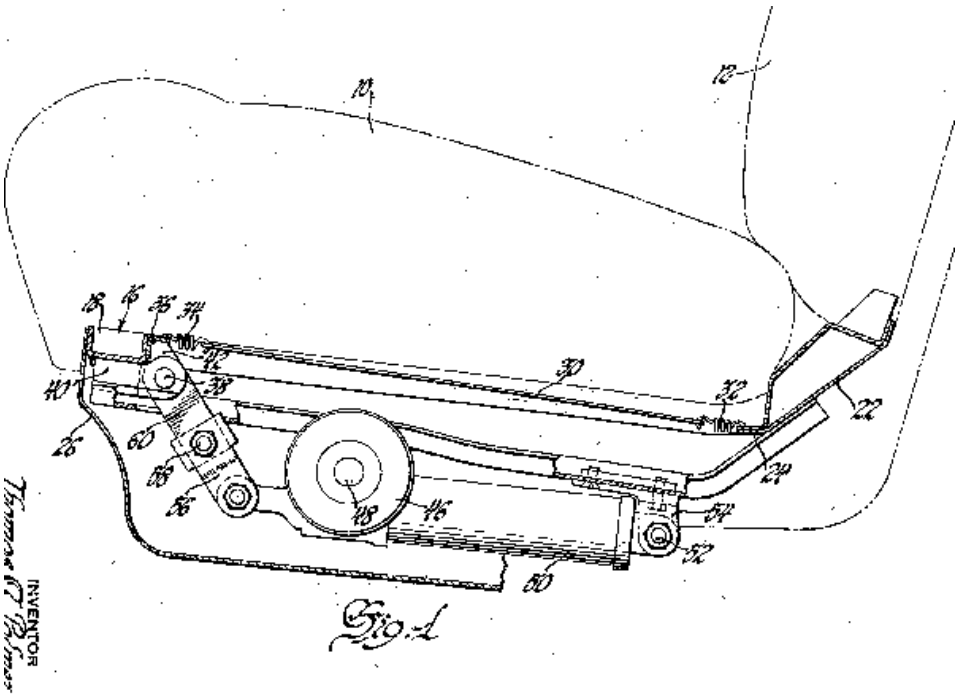

B60N 3/00

Arrangements or adaptations of other passenger fittings, not otherwise provided for (of radio sets, television sets, telephones, {stowing or holding appliances} , safety belts or the like B60R)

Definition statement

This place covers:

Tables or trays, beds, hand grips or straps, floor mats, footrests, receptacles for refuse, receptacles for food or beverages, receptacles for cigarettes or the like, electrically-heated lighters, cooking or boiling devices, drinking-water.

References

Limiting references

This place does not cover:

Radio sets, television sets, telephones, safety belts, airbag, stowing or holding appliances	B60R

Glossary of terms

In this place, the following terms or expressions are used with the meaning indicated:

Passenger (here)	the meaning of the term passenger is limited to passengers of vehicles as set out in the definitions of B60 and B60N

B60N 3/004

{of foldable trays mounted on the back-rest}

Definition statement

This place covers:

Illustrative example of subject matter classified in this group.

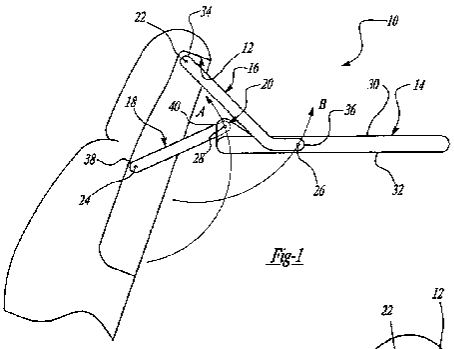

Fig-1

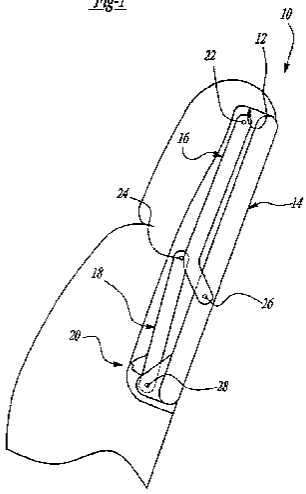

Fig-2

B60N 3/005

{mounted on the steering wheel}

Definition statement

This place covers:

Illustrative example of subject matter classified in this group.

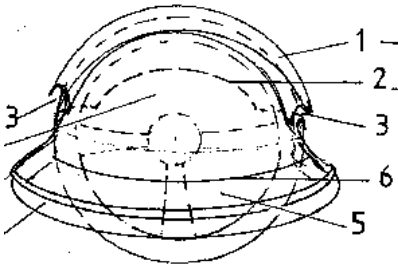

FIG.1

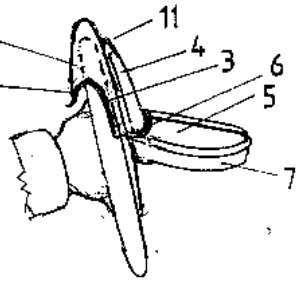

FIG.2

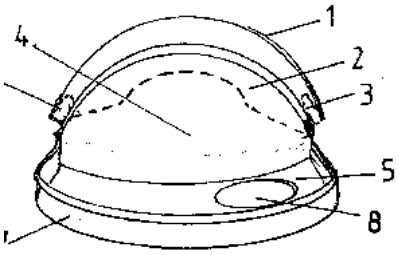

FIG.3

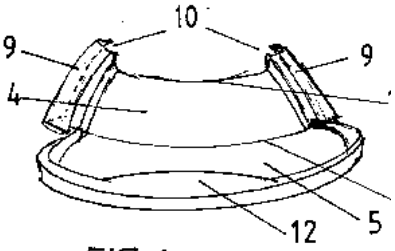

FIG.4

B60N 3/007

{mounted on the window sill}

Definition statement

This place covers:

Illustrative example of subject matter classified in this group.

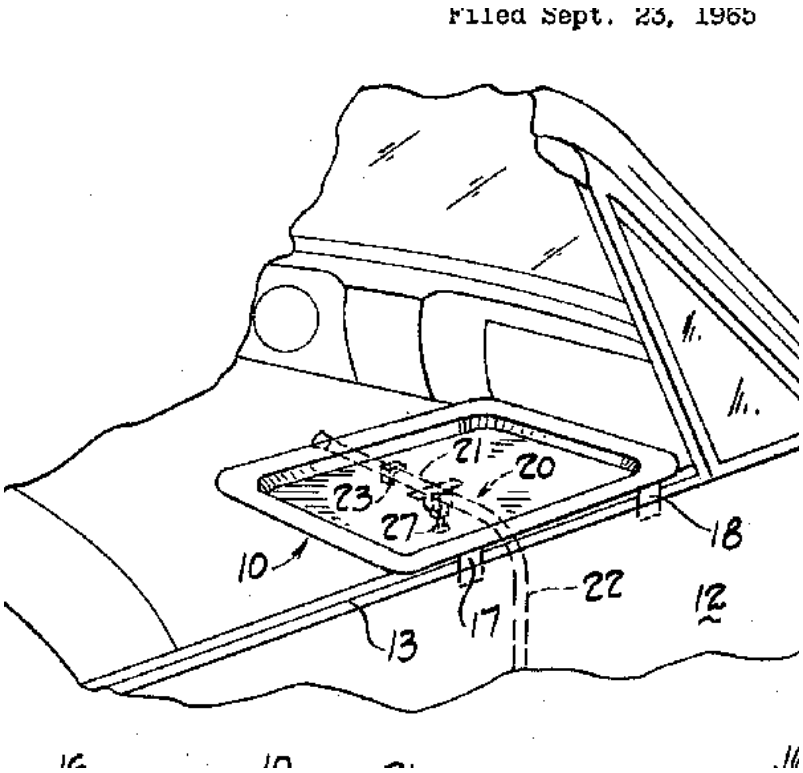

B60N 3/023

{movable}

Definition statement

This place covers:

Illustrative example of subject matter classified in this group.

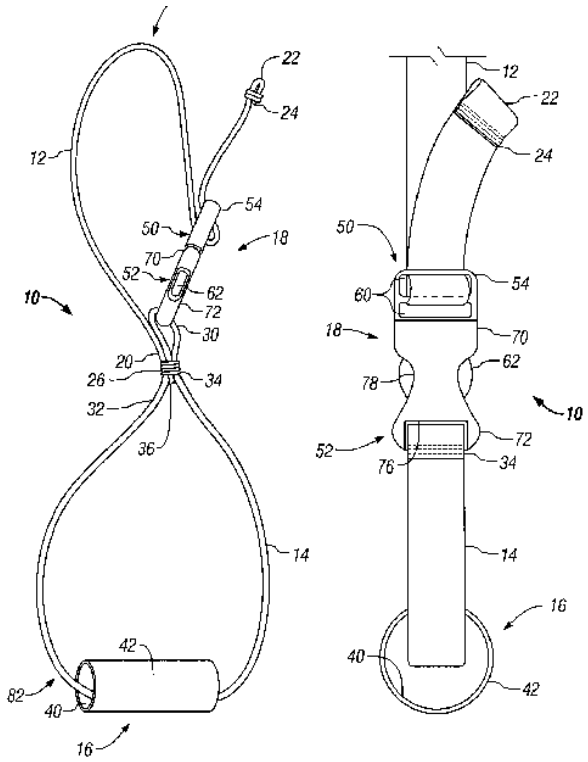

B60N 3/026

{characterised by the fixing means (B60N 3/023 takes precedence)}

Definition statement

This place covers:

Illustrative example of subject matter classified in this group.

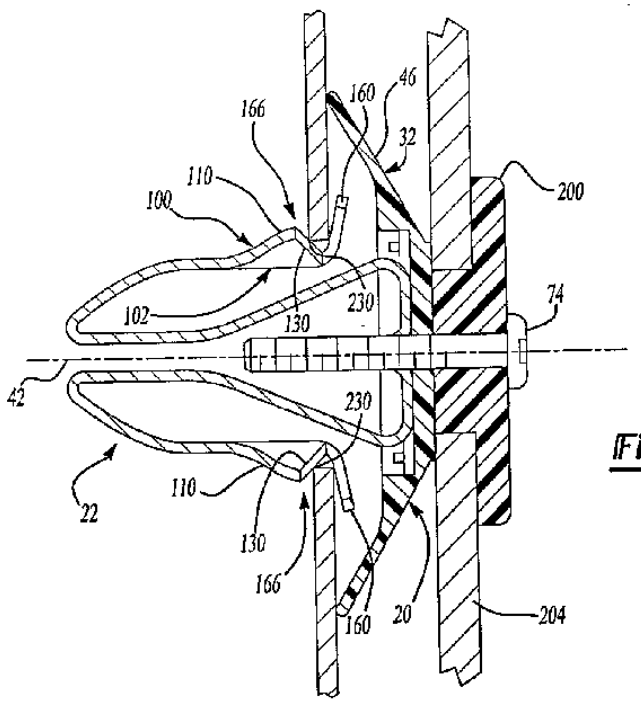

Fig

B60N 3/042

{of carpets (B60N 3/046, B60N 3/048 take precedence)}

Glossary of terms

In this place, the following terms or expressions are used with the meaning indicated:

Carpet (here):	the (layer) element (e.g. carpet) directly covering the car body and coming with the car as produced by the car manufacturer

B60N 3/044

{of removable mats (B60N 3/046, B60N 3/048 take precedence)}

Definition statement

This place covers:

Illustrative example of subject matter classified in this group.

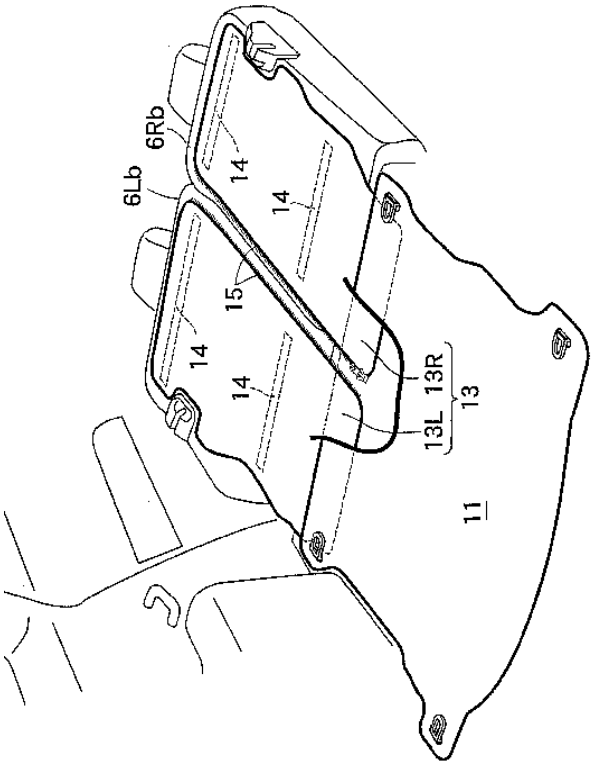

Glossary of terms

In this place, the following terms or expressions are used with the meaning indicated:

Removable mat	additional (with respect to the carpet as set out in B60N 3/042) (layer) element attached such that it can be removed e.g. by quick release means e.g. for cleaning purposes

B60N 3/048

{characterised by their structure}

Definition statement

This place covers:

Illustrative example of subject matter classified in this group.

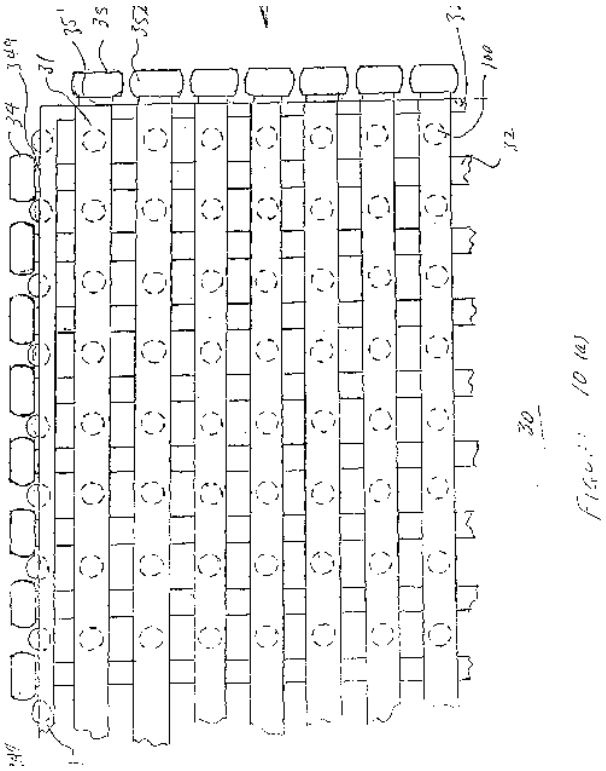

B60N 3/06

of footrests (floors of road vehicles {B62D 25/20})

References

Limiting references

This place does not cover:

Lower leg rests, e.g. calf rests	B60N 2/4495
Thigh rests	B60N 2/62

Glossary of terms

In this place, the following terms or expressions are used with the meaning indicated:

Foot rest	support element for a foot and /or higher parts of the leg, the foot rest being mounted on the car floor

B60N 3/063

{with adjustment systems}

Definition statement

This place covers:

Illustrative example of subject matter classified in this group.

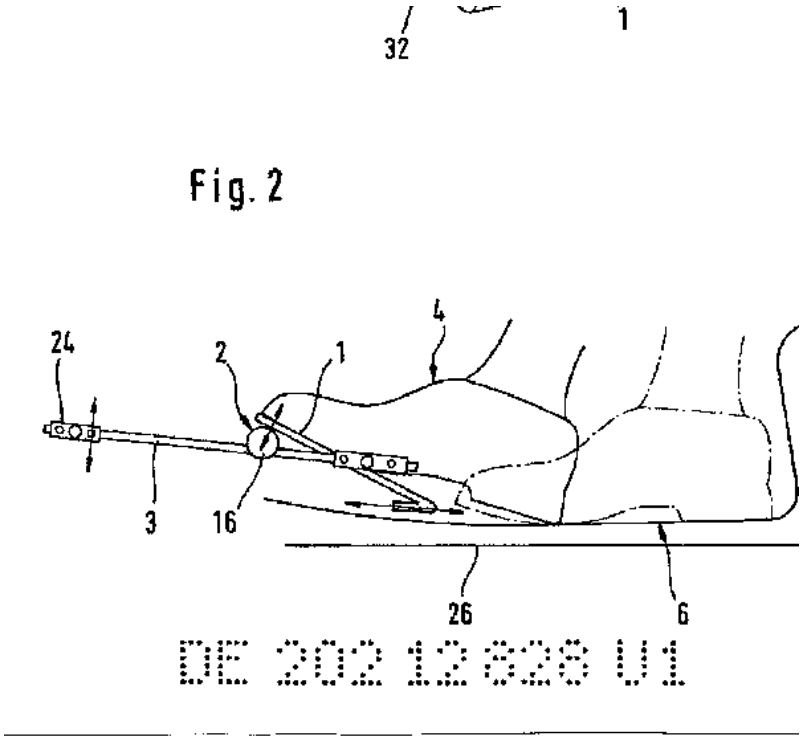

B60N 3/066

{with protection systems against abnormal g-forces}

Definition statement

This place covers:

Illustrative example of subject matter classified in this group.

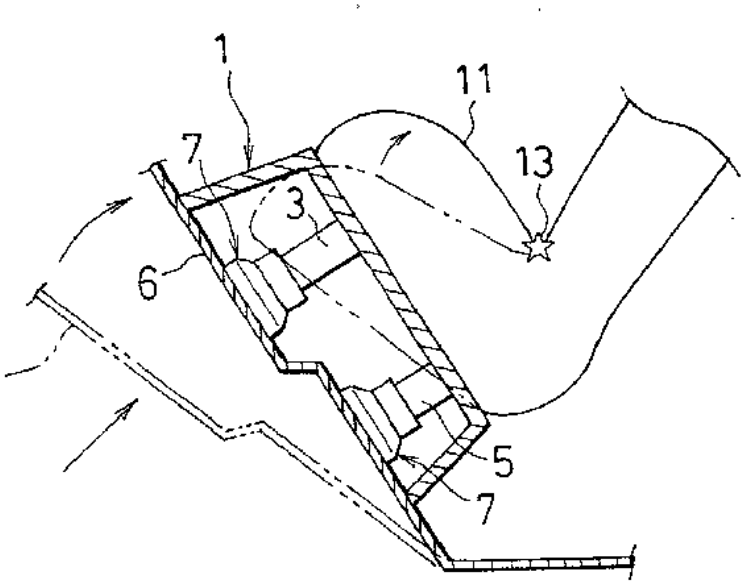

B60N 3/10

of receptacles for food or beverages, e.g. refrigerated (picnic sets A45F {cup holders in general A47G 23/02})

References

Informative references

Attention is drawn to the following places, which may be of interest for search:

Household or table equipement	A47G

B60N 3/101

{fixed}

Definition statement

This place covers:

Illustrative example of subject matter classified in this group.

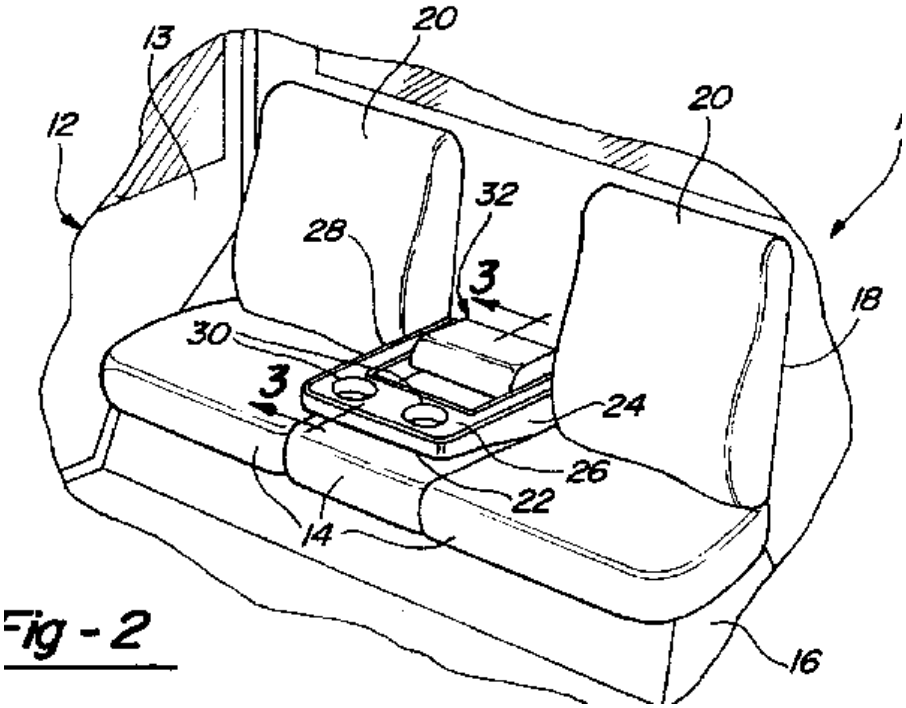

Fig - 2

B60N 3/102

{storable or foldable in a non-use position}

Definition statement

This place covers:

Illustrative example of subject matter classified in this group.

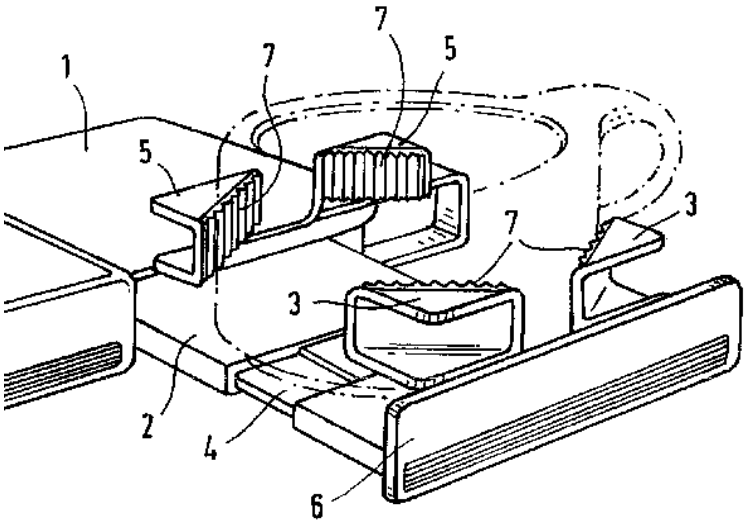

FIG.1

B60N 3/104

{with refrigerating or warming systems}

Definition statement

This place covers:

Illustrative example of subject matter classified in this group.

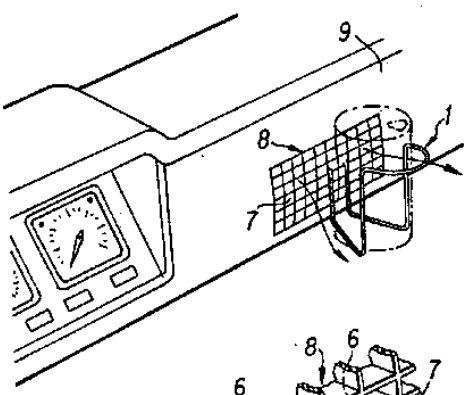

FIG. 1

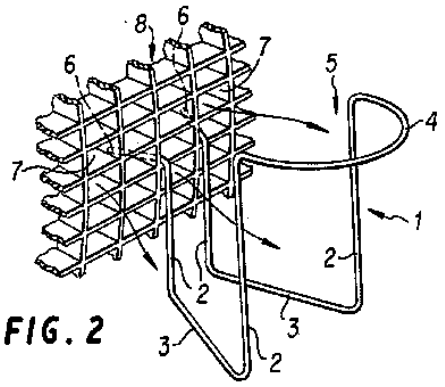

FIG. 2

B60N 3/106

{with adjustable clamping mechanisms}

Definition statement

This place covers:

Illustrative example of subject matter classified in this group.

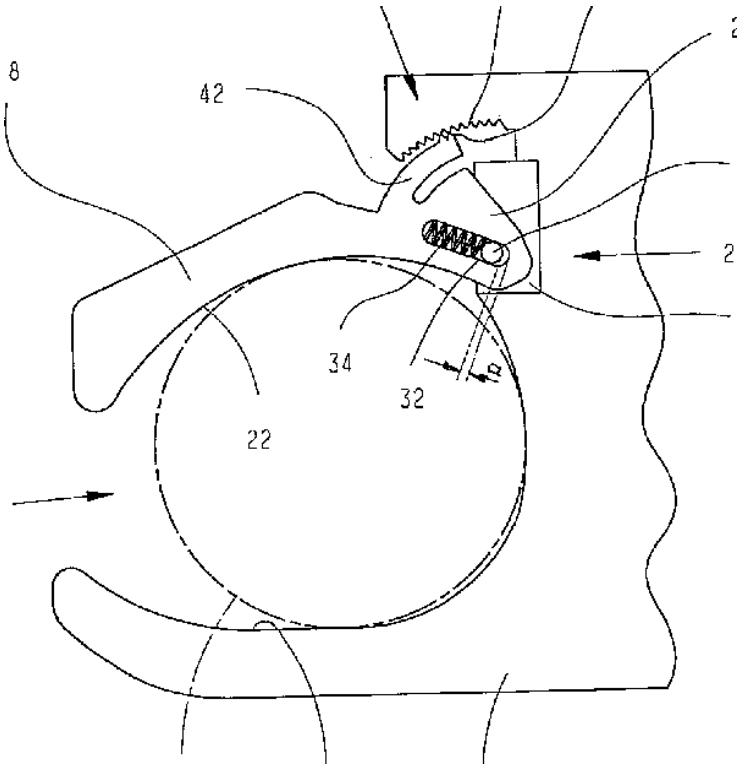

Glossary of terms

In this place, the following terms or expressions are used with the meaning indicated:

Adjustable clamping means	The holding means touching the object are adjusted in order to hold the object. The holding means are not resilient. However those means for adjustment might comprise resilient means.

B60N 3/108

{with resilient holding elements}

Definition statement

This place covers:

Illustrative example of subject matter classified in this group.

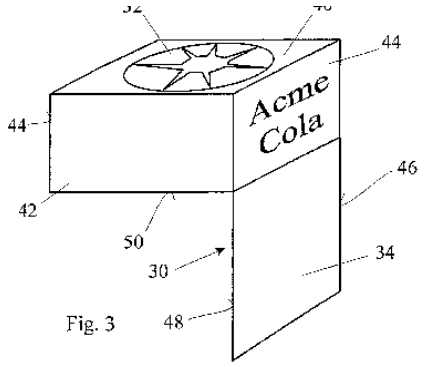

Fig. 3

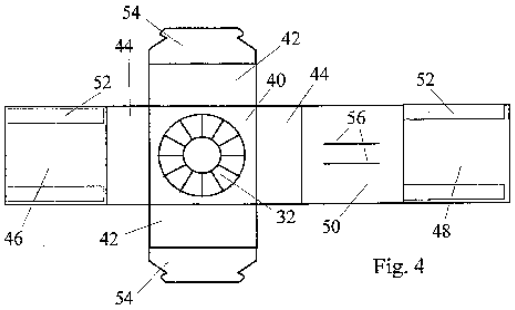

Fig. 4

Glossary of terms

In this place, the following terms or expressions are used with the meaning indicated:

Resilient holding element	holding element which directly touch the object to be held is resilient itself (e.g. made of rubber) in order to hold the object

B60N 3/12

of receptacles for cigarettes or the like ({B60N 2/4686 takes precedence } ; receptacles for cigarettes or the like A24F)

Definition statement

This place covers:

Illustrative example of subject matter classified in this group.

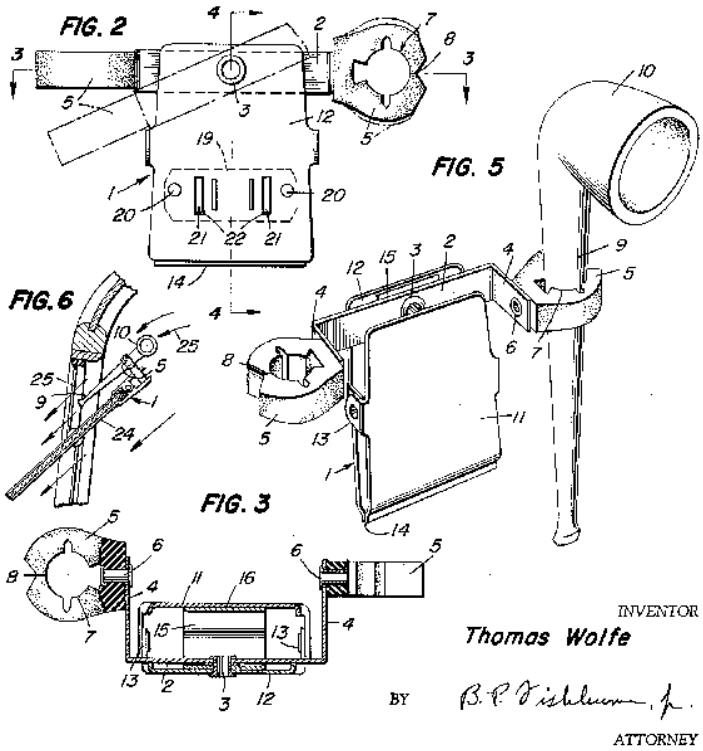

B60N 3/14

of electrically-heated lighters {(arrangements of lighting devices for vehicle interiors for lighting passenger or driving compartment B60Q 3/02, igniters using electrically-produced heat F23Q 7/00)}

Definition statement

This place covers:

Illustrative example of subject matter classified in this group.

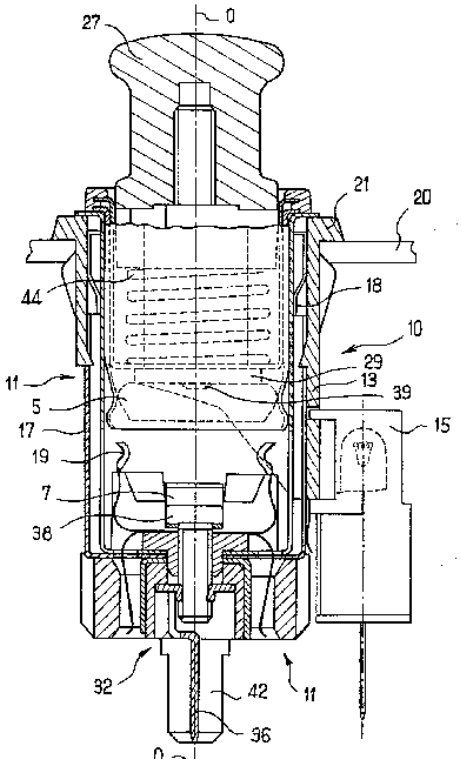

B60N 5/00

Arrangements or devices on vehicles for entrance or exit control of passengers, e.g. turnstiles (turnstiles in general E06B 11/08)

Definition statement

This place covers:

Arrangements or devices on vehicles for entrance or exit control of passengers

References

Informative references

Attention is drawn to the following places, which may be of interest for search:

Means for allowing passage through fences, barriers or the like	E06B 11/00
Individual entry or exit registers for checking devices	G07C 9/00