B60K

ARRANGEMENT OR MOUNTING OF PROPULSION UNITS OR OF TRANSMISSIONS IN VEHICLES; ARRANGEMENT OR MOUNTING OF PLURAL DIVERSE PRIME-MOVERS IN VEHICLES; AUXILIARY DRIVES FOR VEHICLES; INSTRUMENTATION OR DASHBOARDS FOR VEHICLES; ARRANGEMENTS IN CONNECTION WITH COOLING, AIR INTAKE, GAS EXHAUST OR FUEL SUPPLY OF PROPULSION UNITS, IN VEHICLES

Definition statement

This place covers:

Particular arrangements or mounting in vehicles of:

- Propulsion units or diverse prime movers (electrical, steam, internal-combustion, jet-propulsion, hybrid or other propulsion units),
- Transmissions.
- Diverse elements of propulsion units: cooling system, air intake or gas exhaust, fuel supply, element in connection with the power supply from force of nature (e.g. sun, wind),
- Auxiliary drives devices,
- Instrumentation or dashbord.

Relationships with other classification places

The following subject matters are not covered by this subclass:

- Subclass B60B and B60C embrace all vehicle wheels and tyres, except wheels for roller skates A63C 17/22, wheels for model railway vehicles A63H 19/22, and special adaptations of wheels or tyres for aircraft B64C 25/36.
- Subclass B60C embraces the connection of valves to inflatable elastic bodies in general, and in this respect it is not limited to vehicles.
- Subclass B60L embraces certain electric equipment of all electrically-propelled vehicles.
- Subclass B60M embraces certain power supply for, but external to, any kind of electrically-propelled vehicle
- Subclass B60R embraces safety belts or body harnesses used in all types of land vehicles
- Subclass B60S is a residual group for servicing, cleaning, repairing, supporting or lifting of vehicles.
- Subclass B60T includes brake control systems of general applicability, and in this respect it is not limited to vehicles. It also includes rail-vehicle power-brake systems and some features of rail-vehicle brake systems

Conjoint control of different drive units are not any more in this subclass; they are classified in subclass B60W.

References

Informative references

Attention is drawn to the following places, which may be of interest for search:

Wheel chairs	A61G
Suspension	B60G
Cooling, heating, venting devices especially for passenger, these groups comprise also the devices which are used for conjoint climatisation for the passenger space and for other devices (like a battery for example).	B60H
Seats in a vehicle	B60N

Power driven steering	B62D 5/00
Dynamo electric machines	H02K

Glossary of terms

In this place, the following terms or expressions are used with the meaning indicated:

Automatic control	Using control systems for automatizing or assisting, to a full- or partial extent, tasks associated with driving of the vehicle, e.g. those normally carried out by the driver or those necessary to control the motion of the vehicle.
Auxiliary equipment	A subsidiary or supplementary device of the propulsion, transmission or other units of the vehicle, e.g. a pump for supply of pressure for the control unit.
Conjoint Control	A programmed or condition-responsive automatic controller on-board the vehicle, embodying control logic for plural vehicle sub-units and sends control signals to actuators of two or more vehicle sub-units, so that the sub-units act together to solve a particular problem or in response to a particular driving condition.
Cruise control ACC	A system for automatically controlling vehicle speed, which may include additional functions e.g. control of distance between vehicles, so-called "Adaptive Cruise Control" (ACC).
Drive control system	An electronic system in a road vehicle for automatically controlling the movement of that vehicle in order to take certain actions.
Driving parameter	All input or output parameters of the road vehicle drive control systems, e.g. road specific parameters, driver or passenger related parameters, state variables of motion of the vehicle body or parameters related to the vehicle itself like load or weight of the vehicle
Hybrid vehicles HEV	Vehicles having two or more prime movers of more than one type for mutual or common propulsion, e.g. HEV: electrical and internal combustion motors, and that are either singularly or in combination used for propulsion of the vehicle.
Road vehicle	A motorised passenger vehicle normally under the control of a human driver for transportation on roads, e.g. an automobile, truck or bus
Drive-unit	Propulsion unit together with transmission, a "drive-unit" can additionally include the ultimate driven unit
Sub-Unit	One of the following vehicle systems: propulsion systems; clutch system; change-speed gearing system; system for distributing drive torque between front and rear axles; axle differential system; brake system; steering system or suspension system; energy storage means; fuel cells or other auxiliary equipments
Transmission	All propulsion parts linking propulsion units, e.g. engines, to ultimate propulsive elements, e.g. wheels
Vehicle	All vehicles except those restricted to one of the following types of vehicles: rail vehicles, waterborne vessels, aircraft, space vehicles, hand carts, cycles, animal-drawn vehicles, and sledges, which are covered by the relevant subclasses of B61 - B64. Thus, the term "vehicle" includes:- vehicular characteristics which are common to more than one of the above listed types;- certain characteristics restricted to automobiles, road or cross-country trailers

B60K 1/00

Arrangement or mounting of electrical propulsion units (B60K 7/00 takes precedence; arrangement or mounting of plural diverse prime-movers for mutual or common propulsion B60K 6/00; electric transmission arrangements B60K 17/12; electric equipment or propulsion of electrically-propelled vehicles per se B60L; current-collectors for power supply lines of electrically-propelled vehicles B60L 5/00)

References

Limiting references

This place does not cover:

Arrangement or mounting of plural diverse prime-movers for mutual or common propulsion	B60K 6/00
Hybrid vehicles having transmission units for driving a plurality of drive axles, e.g. four-wheel drive	B60K 6/52
Disposition of motor in, or adjacent to, traction wheel;the motor being electric	B60K 7/00, B60K 7/0007
Electric transmission arrangements	B60K 17/10, B60K 17/12
Four wheel drive vehicle with one electric motor for driving one axle	B60K 17/358
Current-collectors for power supply lines of electrically-propelled vehicles	B60L 5/00
Method, circuits or devices for controlling the traction motor speed of electric vehicle	B60L 15/00
Conjoint control of electric propulsion units	B60W 10/08
Conjoint control of hybrid vehicles.	B60W 20/00
Steering non-deflectable wheels by differentially driving ground-engaging elements	B62D 11/02
Arrangement for handling mechanical energy structurally associated with the dynamo electric machine.	H02K 7/00

Informative references

Attention is drawn to the following places, which may be of interest for search:

Motor driven wheel chairs	A61G 5/04
Electric equipment or propulsion of electrically propelled vehicles	B60L
Current-collectors for power supply lines of electrically-propelled vehicles	B60L 5/00
Superstructure for passenger vehicles	B62D 31/00
Dynamo-Electric Machines : also the direct association of the dynamo-Electric Machine with another component	H02K
Machines with counter rotating rotors	H02K 16/005
Control of electric motors	H02P

B60K 1/04

of the electric storage means for propulsion (for auxiliary purposes only B60R 16/04; supplying batteries to, or removing batteries from, vehicles B60S 5/06)

References

Limiting references

This place does not cover:

Cooling of the batteries using HVAC of the vehicle	B60H 1/00278
Arrangement of non- propulsive batteries	B60R 16/04
Servicing station for replacing batteries	B60S 5/06
Fixing of the housing of the batteries to the vehicle if the invention is on the housing of the batteries	H01M 2/1083
Fuel cells	H01M 8/00
Heating of fuel cell	H01M 8/04007
Heating and cooling of batteries	H01M 10/60
Heating and cooling of batteries in the vehicle	H01M 10/625

Informative references

Attention is drawn to the following places, which may be of interest for search:

Electric storing means specially adapted for HEVs	B60K 6/28
Fuel cells specially adapted for HEVs	B60K 6/32
Batteries or fuel cell security problems in electric vehicles	B60L 3/0046
Connecting elements for charging the batteries	B60L 11/1809
Exchange of the energy storage elements for electric vehicles	B60L 11/1822
Braking elements using wheel movement for accumulating energy, e.g. by driving air compressors	B60T 1/10
Batteries per se	H01M
Housings or Holders for batteries	H01M 2/10

Special rules of classification

If there exist a second prime mover, e.g. internal combustion engine (ICE) or hydraulic accumulator, classification should also be given in B60K 6/00.

B60K 3/00

Arrangement or mounting of steam or gaseous-pressure propulsion units (B60K 7/00 takes precedence; arrangement or mounting of plural diverse prime-movers for mutual or common propulsion B60K 6/00; gaseous-pressure transmission arrangements B60K 17/10)

Definition statement

This place covers:

This groups comprise documents concerning the arrangement or mounting in the vehicle of the steam engine or gaseous-pressure propulsion. The engine per se is classified in F01K, F01B, F02C.

References

Limiting references

This place does not cover:

Arrangement or mounting of plural diverse prime-movers for mutual or common propulsion	B60K 6/00
Disposition of motor in, or adjacent to, traction wheel	B60K 7/00
Gaseous-pressure transmission arrangements	B60K 17/10

Informative references

Attention is drawn to the following places, which may be of interest for search:

Hybrid vehicles using fluid storing means	B60K 6/08
Engines using uniflow principle	F01B 17/00
Steam engines	F01B 17/04
Steam engine plants; For driving vehicles	F01K, F01K 15/02
Turbines	F02C

B60K 5/00

Arrangement or mounting of internal-combustion or jet-propulsion units (B60K 7/00 takes precedence; arrangement or mounting of plural diverse prime-movers for mutual or common propulsion B60K 6/00)

Definition statement

This place covers:

These groups comprise documents concerning the arrangement of an internal combustion motor in the vehicle. A damping means, rubber or the control of a damping means per se are in F16F.

References

Limiting references

This place does not cover:

Motor arranged in or approximate to the wheel	B60K 7/00
Understructures of the vehicle with resilient means for suspension	B62D 21/11

Understructures : front and rear frame of the vehicle	B62D 21/152
Combustion engines per se	F02B
Combinations of the engines with mechanical gearing.	F02B 61/06
Shock absorbers; Means for damping vibration, fluid dampers and control therefore.	F16F

B60K 5/02

with the engine main axis, e.g. crankshaft axis, substantially in or parallel to the longitudinal centre line of the vehicle

Special rules of classification

This group is given only if the fact that the crankshaft axis is parallel to the longitudinal centre line of the vehicle is important for the invention.

B60K 5/04

with the engine main axis, e.g. crankshaft axis, transversely to the longitudinal centre line of the vehicle

Special rules of classification

This group is given only if the fact that the crankshaft axis is transversal to the longitudinal centre line of the vehicle is important for the invention.

B60K 5/06

with the engine main axis substantially vertical

Special rules of classification

This group is given only if the fact that the crankshaft axis is vertical is important for the invention.

B60K 6/00

Arrangement or mounting of plural diverse prime-movers for mutual or common propulsion, e.g. hybrid propulsion systems comprising electric motors and internal combustion engines {; Control systems therefor, i.e. systems controlling two or more prime movers, or controlling one of these prime movers and any of the transmission, drive or drive units (arrangement or mounting in vehicles of electrical gearing, in which an electrical machine serves only as reduction gearing and not as the prime mover and in which no electrical storing means are used B60K 17/12; control and regulation of purely electrical prime movers B60L; prime-movers comprising electrical and internal combustion motors in a common engine block or housing per se F02B 65/00; electric motors or motor-generators used for starting the combustion engine F02N 11/04; electric motors for synchronising gearing F16H 3/12)}{Informative references: mechanical gearings with secondary electric drive F16H 3/72; arrangements for handling mechanical energy structurally associated with the dynamo-electric machine H02K 7/00; machines comprising structurally interrelated motor and generator parts H02K 51/00; dynamo-electric machines not otherwise provided for in H02K see H02K 99/00}

Definition statement

This place covers:

The arrangement and mounting of different prime-movers for common propulsion of a vehicle.

Hybrid propulsion systems comprising electrical and combustion engines.

Prime-movers comprising internal combustion motor and energy storing means.

Relationships with other classification places

B60K 6/00 is the place where the layout and arrangement of hybrid propulsion systems will be classified. The control of these systems will be classified in subclass B60W 20/00 and B60W 10/00 for the type of the controlled unit with additional classification symbol in this group when the type of hybrid propulsion system is of interest. Combustion engine features are classified per se in the relevant subclasses F02B, F02D, F02N. Transmission or clutch features per se are classified in the relevant subclasses F16H or F16D.

References

Limiting references

This place does not cover:

Propulsion of purely electrically-propelled vehicles with power supplied within the vehicle	B60L 11/00
Control of the hybrid vehicles	B60W 20/00
Propulsion control with common controlling member for different functions	B60W 30/18181

Informative references

Attention is drawn to the following places, which may be of interest for search:

Electric motors mounted in or adjacent to the wheels	B60K 7/00

Hydrostatic gearing, in which pump/motors serve only as a reduction gearing and not as prime-mover, in which no accumulators are used	B60K 17/10
Electric gearing, in which electric machines serve only as a reduction gearing and not as prime-mover and in which no storing means are used	B60K 17/12
Transmission arrangements for driving front and rear wheels, having one or more electric or hydraulic motors for driving wheels	B60K 17/356
Prime movers comprising electric motors and ICE in a common engine block or housing	F02B 65/00
Electric motors or motor-generators used for starting the combustion engine	F02N 11/04
Electric motors for synchronizing gearing	F16H 3/12
Mechanical gearings having orbital motion with secondary drive in order to vary speed continuously	F16H 3/72
Control of gear shifting per se	F16H 61/00
Control of hydrostatic gearings, also using accumulators	F16H 61/40
Arrangements for handling mechanical energy structurally associated with the dynamo-electric machine	H02K 7/00
Dynamo-electric gears, i.e. dynamoelectric means for transmitting mechanical power comprising structurally interrelated motor and generator parts	H02K 51/00

Special rules of classification

Multi-aspect classification practice is used in this group for hybrid vehicles. Whenever one or more specific aspects of subunits are concerned, classification should be given for each of the different subunit in B60K 6/22 and a classification symbol should be added in the relevant place for the architecture B60K 6/42 and also for the driveline architecture B60K 6/50.

When classifying in one of groups B60K 6/22, B60K 6/42 or B60K 6/50, further technical classification, which is considered to represent information of interest for search should be classified in the other subgroups of B60K 6/00 to enable searching using combination of classification symbols. Where appropriate, classification symbols should be given for the architecture of the hybrid propulsion system in groups B60K 6/42 - B60K 6/485 and for the arrangement or kind of transmission units in groups B60K 6/50 - B60K 6/547.

The flywheel storing means are classified in B60K 6/105 if the power transmission is mechanical and in B60K 6/30 if the power transmission is purely electrical.

The power split transmission architecture B60K 6/445 is to be classified also in F16H 2037/0866 for distributing type, in F16H 2037/088 for summing type and F16H 2037/101 for parallel type, F16H 2037/102 or F16H 2037/104 for crossed connections of several planetary sets, F16H 2037/103 for Ravigneaux type.

Use of the Indexing Code scheme is mandatory. When classifying in group B60K 6/00 classification must also be made in groups B60K 6/00 – B60K 6/54 for additional features, in B60Y 2200/00 for vehicle type, in B60Y 2400/00 for special features in general, in B60Y 2300/00 in order to identify the purpose and in B60W 10/00 for multiple controlled sub-units and in B60W 2510/00 - B60W 2560/06 for controller input parameters and in B60W 2710/00 - B60W 2720/406 for the output target values.

Glossary of terms

In this place, the following terms or expressions are used with the meaning indicated:

Energy storing means	Apparatus for storing propulsive energy and providing stored energy to drive the prime-mover or the ultimate propulsive elements, e.g. wheels.
Hybrid electric vehicle	Vehicles having an electric prime-mover and a combustion engine, in which the electric prime-mover and the combustion engine either singly or in combination, drive the ultimate propulsive elements, e.g. wheels.
Motor-generator	An electric machine, such as a motor or a generator or a mechanical combination thereof, which can provide positive mechanical output force or torque and which can function at other times as an electric generator.
Prime-mover	A propulsion unit or source of motive power providing a mechanical output, e.g. via a rotating shaft.

Synonyms and Keywords

In patent documents, the following abbreviations are often used:

HEV	Hybrid electric vehicle

B60K 6/42

characterised by the architecture of the hybrid electric vehicle

Glossary of terms

In this place, the following terms or expressions are used with the meaning indicated:

Series type or Range extender	HEVs having at least two motor-generators in which the first motor-generator is mechanically connected for driving or braking the wheels supplied by a battery which power is mostly generated by the second motor-generator mechanically connected to the combustion engine. Example: The combustion engine is mechanically connected to a motor-generator. The combustion engine is not mechanically connected to the wheels. All the output energy of the combustion engine is converted to electrical energy. The energy is used to drive a second electric machine connected to the wheels and/or to charge the energy storing means. The second electric machine will be used as generator during braking. (US5214358, example also classified in B60K 6/30 for mechanical 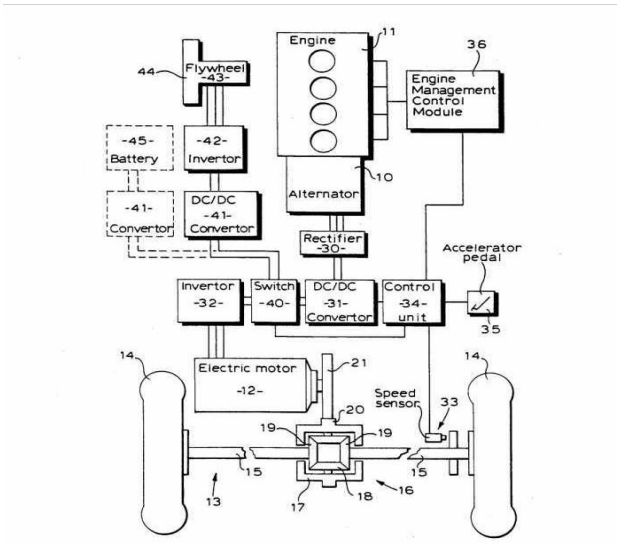 accumulators)

Parallel type	HEVs having a single motor-generator in which both the combustion engine and the motor-generator can directly drive the wheels. Parallel type HEVs in which the motor-generator only assist the combustion engine and cannot drive the wheels alone are specially defined as 'motor assist type'. Therefore 'parallel type' is assigned to HEVs in which the motor generator can drive the wheels alone without the engine being connected to the wheels. Example: There is a single motor-generator and the combustion engine is mechanically connected to the motor-generator, via a clutch or via differential gearing. The motor-generator is also mechanically connected to the wheels. The vehicle is driven electrically by the motor-generator or mechanically by the engine or by both in combination. (EP941883) 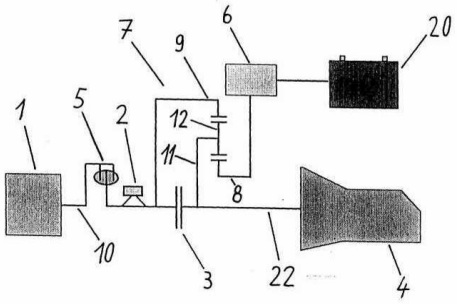
Motor-assist type	Parallel type HEV in which the motor-generator only assist the combustion engine and cannot drive the wheels alone. Example: The motor-generator is mechanically connected to the engine. There is no clutch or differential gearing between motor-generator and engine. The combustion engine is mechanically connected to the wheels. (FR2480042) 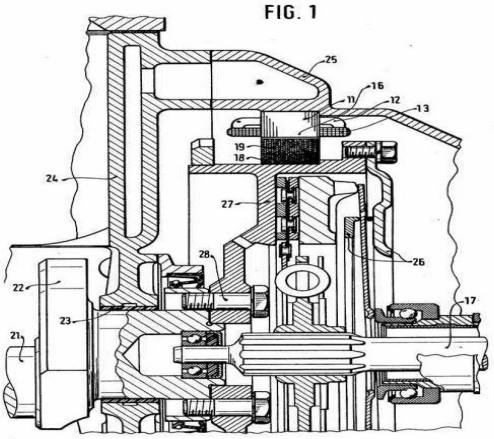
Series-parallel type	HEV having at least two motor-generators, which include the functions of both the series type and the parallel type.

Series-parallel switching type	Series-parallel type HEV in which the mode can be switched between series mode and parallel mode. Example: The combustion engine is directly connected to a first motor-generator. There is a second motor-generator mechanically connected to the wheels and a clutch between the two motor-generators. In the series mode the clutch will be disengaged and the second motor generator will drive the wheels by using the electric power generated by the first motor generator. In the parallel mode the clutch will be engaged and the engine directly drives the wheels with or without assistance by the motor generators. (US5513719) F I G. I 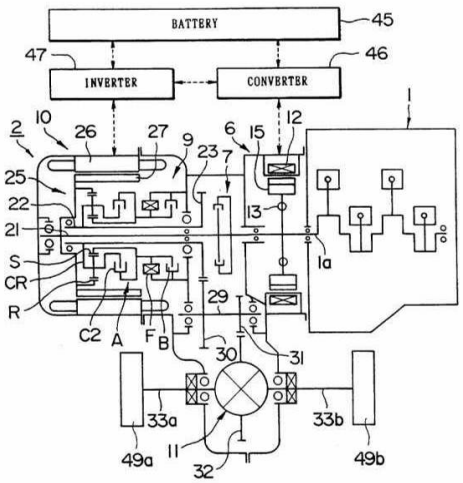

Differential gearing distribution type	Series-parallel type HEVs in which the combustion engine power is distributed or summed by a differential, e.g. a planetary gearing, to the first motor-generator and the wheels, and the electric power generated by the first motor-generator is used to drive the second motor-generator mechanically connected to either the wheels or the combustion engine. The series-mode energy flow path is established when the second motor-generator is driven by the electric power generated by the first motor-generator, while the parallel-mode energy flow path is established when the wheels are driven by both the combustion engine and the second motor-generator. Motor-generator currents are controlled to determine the energy flow path through the drive units.Example: The combustion engine is mechanically connected to a motor-generator via a first element of a differential gearing. A second motor-generator is connected to a second element of the differential gearing. The differential gearing also connects one or both of the motor-generators to the wheels. (US20010049570, example also classified in F16H 2037/102) 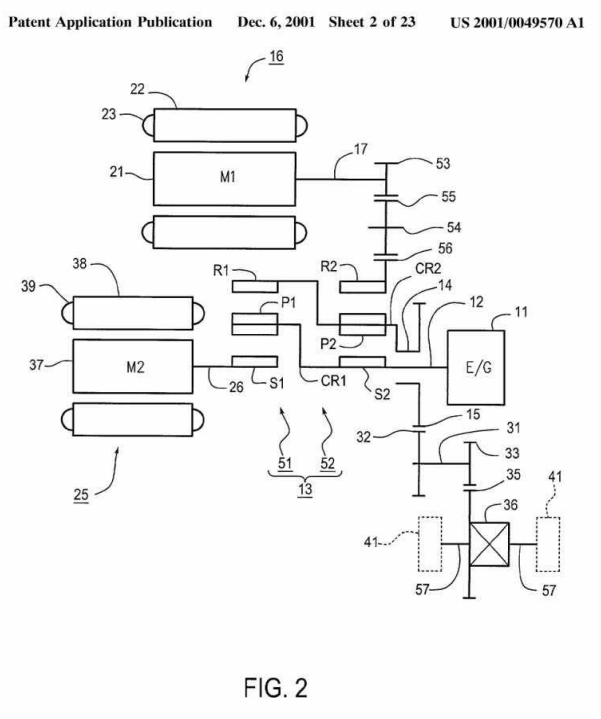 FIG. 2

Electrical distribution type	Series-parallel type HEVs in which the engine power is distributed, using a first motor-generator which is specific as a double rotor-type motor-generator, into mechanical power for driving the wheels and electric power for driving a second motor-generator connected to either the wheels or the combustion engine. The series-mode energy flow path is established when the second motor-generator is driven by the electric power generated by the first motor-generator, while the parallel-mode energy flow path is established when the wheels are driven by both the combustion engine and the second motor-generator. Motor-generator currents are controlled to determine the energy flow path through the drive units. Example: The combustion engine shaft is mechanically connected to the inner rotor of a double-rotor type motor-generator. The outer rotor of the double-rotor type is connected to the second motor generator which is connected to the shaft driving the wheels. 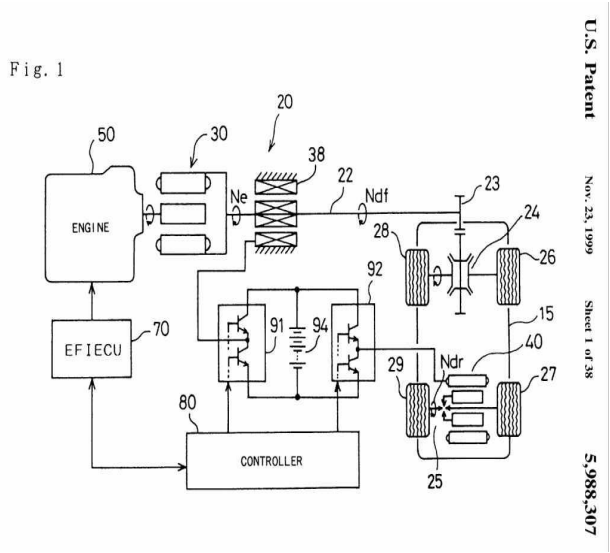 (US5988307)

B60K 6/50

Architecture of the driveline characterised by arrangement or kind of transmission units

Definition statement

This place covers:

Particular arrangements of transmission units.

Kind or type of transmission units, e.g. CVT.

B60K 6/52

Driving a plurality of drive axles, e.g. four-wheel drive

Special rules of classification

If the invention information is related to the transfer gearing independent of the hybrid layout it will be also classified in B60K 17/34. Example: US6533692

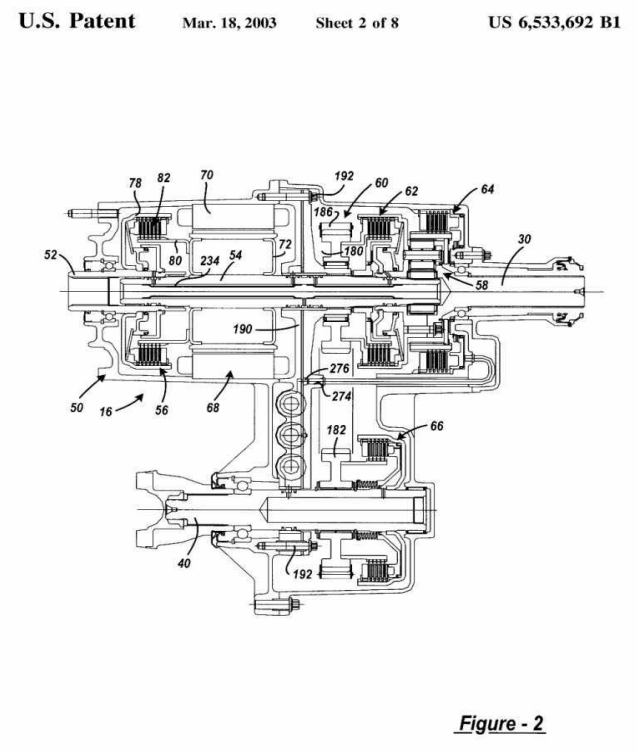

Figure - 2

B60K 6/54

Transmission for changing ratio

Special rules of classification

The aspect of the transmission unit per se are to be classified in the relevant groups of subclass F16H, for example if the invention is related to the Ravigneaux planetary set placed downstream of a power split electric transmission, the classification F16H 3/666 is also given. Example: US7363996

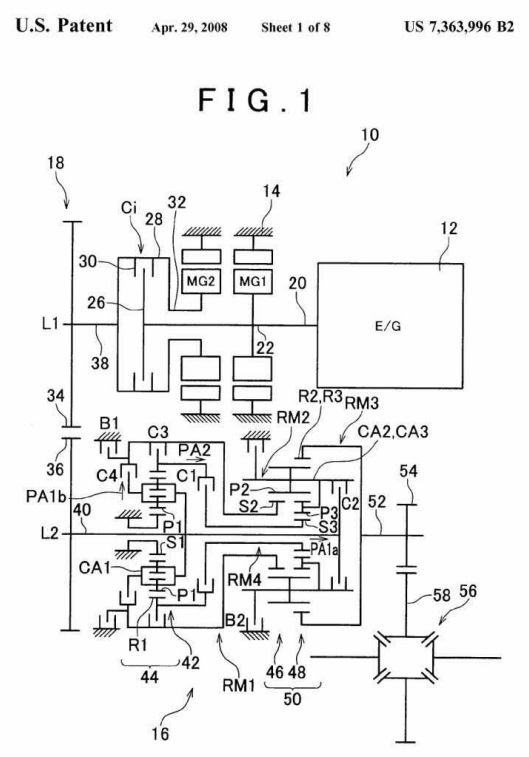

B60K 7/00

Disposition of motor in, or adjacent to, traction wheel (roller-skate driving mechanisms A63C 17/12)

Definition statement

This place covers:

Inventions related to a particular disposition of the motor regarding to the wheel. The term "in, or adjacent to" means there is one motor to drive one wheel (or dual wheels forming a unit). No differential there in between.

References

Limiting references

This place does not cover:

One motor mounted directly on a propulsion axle for rotating right and left wheels of this axle (for example using a differential between the motors and the driven wheels)	B60K 2001/001

Informative references

Attention is drawn to the following places, which may be of interest for search:

Arrangement or mounting of electrical propulsion units	B60K 1/00
Hybrid vehicles	B60K 6/00
Arrangement in connection of cooling a propulsion unit	B60K 11/00
Transmission disposed in or adjacent the vehicle wheel	B60K 17/043
Wheelchairs	A61G 5/00
Resilient suspension	B60G 3/00
Electric equipment or propulsion of electrically propelled vehicles	B60L
Arrangements of braking elements	B60T 1/00
Steering linkages	B62D 7/00
Dynamo electric machines (electric motors)	H02K

Special rules of classification

All documents showing in a schematic way a hybrid or electric vehicle having hub motors in the wheels should not be classified in this group. However, a code for additional information could be given.

Use of the Indexing Code scheme is mandatory for this main group. Additional information should be given in B60K 17/043 if a transmission is used.

B60K 7/0007

{the motor being electric}

References

Informative references

Attention is drawn to the following places, which may be of interest for search:

Structural association of electro motor with clutches, brakes, gears, pulleys etc.	H02K 7/1163

B60K 2007/003

{with two or more motors driving a single wheel}

Definition statement

This place covers:

Illustrative example of subject matter classified in this group.

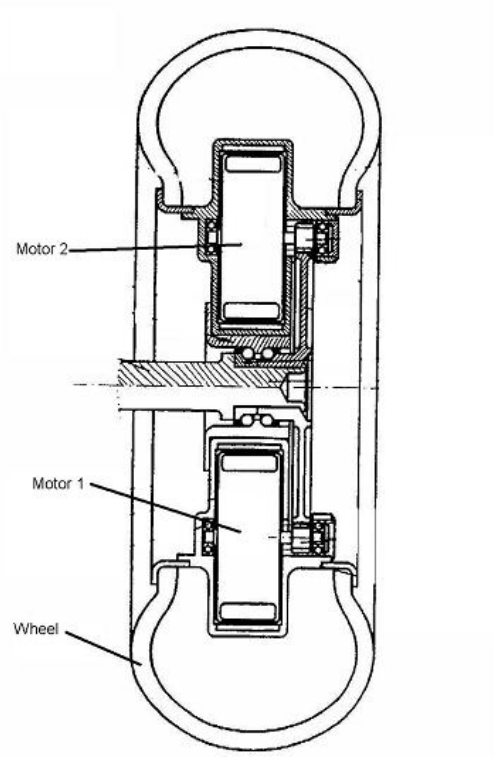

B60K 2007/0046

{the motor moving together with the vehicle body, i.e. moving independently from the wheel axle}

Definition statement

This place covers:

Illustrative example of subject matter classified in this group.

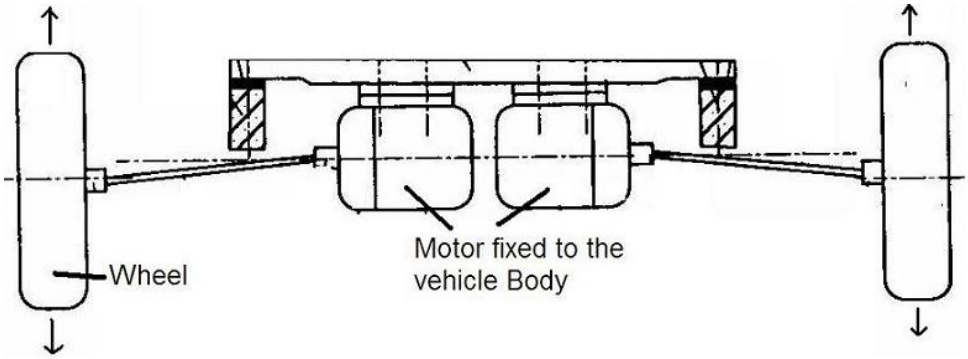

B60K 2007/0053

{the motor moving relative to the vehicle body and to the wheel axle}

Definition statement

This place covers:

Illustrative example of subject matter classified in this group.

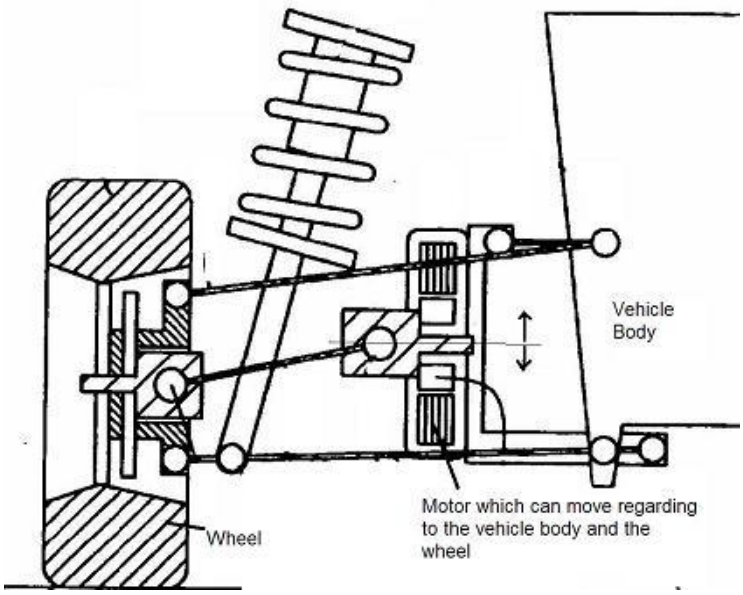

B60K 2007/0061

{the motor axle being parallel to the wheel axle}

Definition statement

This place covers:

Illustrative example of subject matter classified in this group.

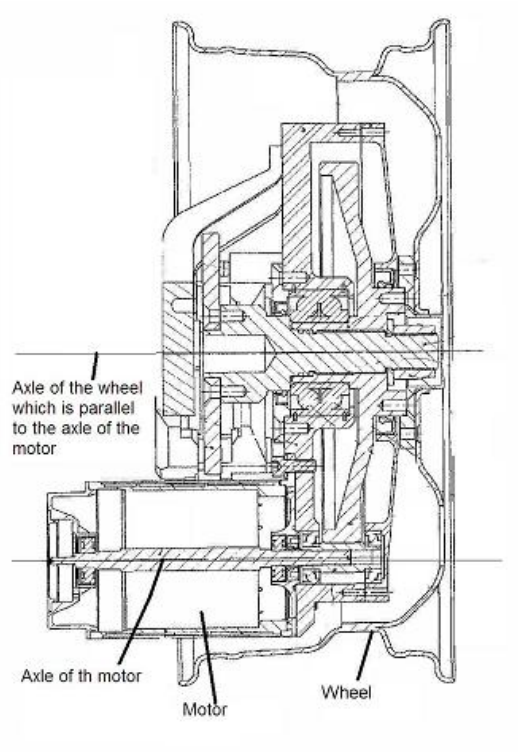

B60K 2007/0076

{the motor axle being horizontal}

Definition statement

This place covers:

Illustrative example of subject matter classified in this group.

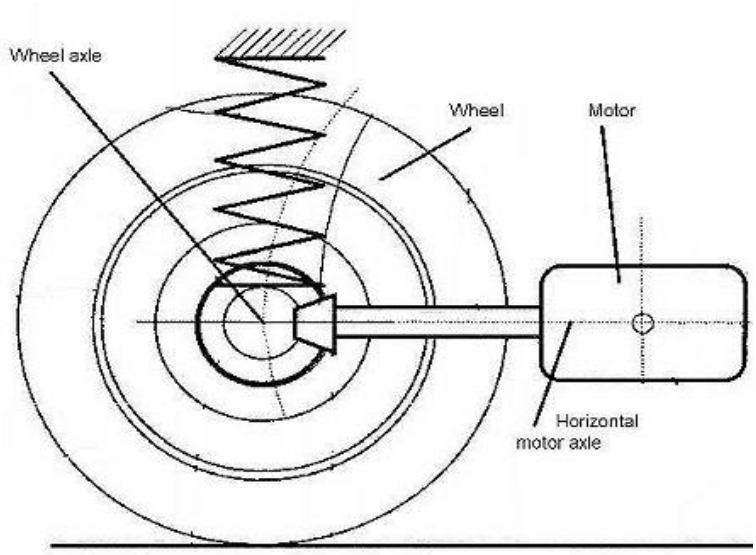

B60K 2007/0084

{the motor axle being vertical}

Definition statement

This place covers:

Illustrative examples of subject matter classified in this group.

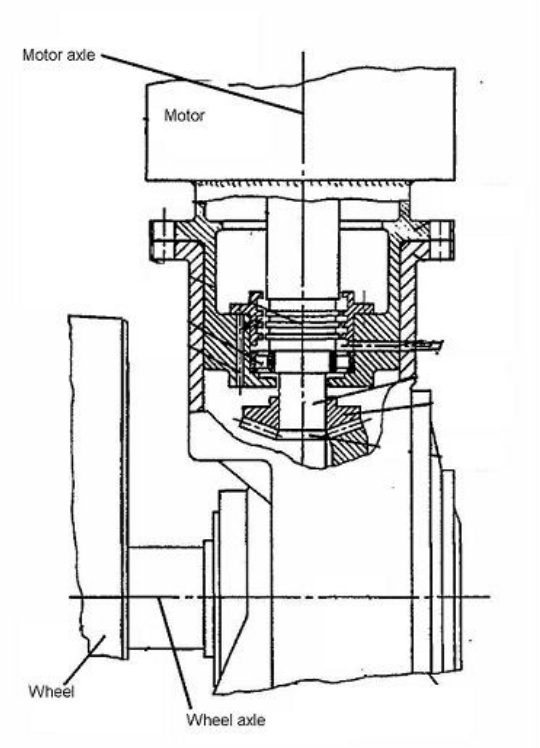

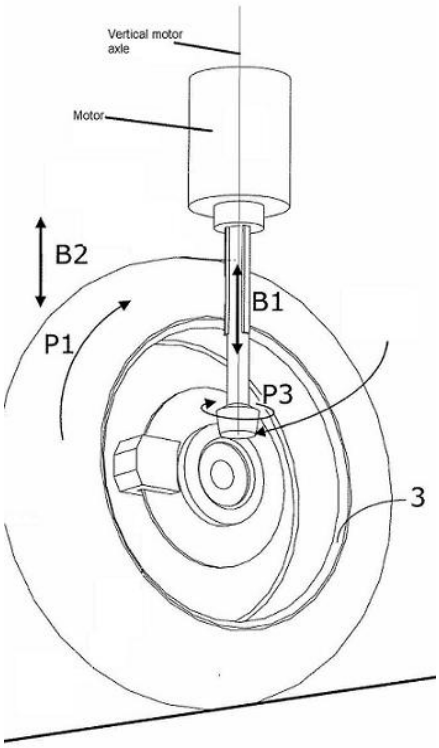

B60K 2007/0092

{the motor axle being coaxial to the wheel axle}

Definition statement

This place covers:

Illustrative example of subject matter classified in this group.

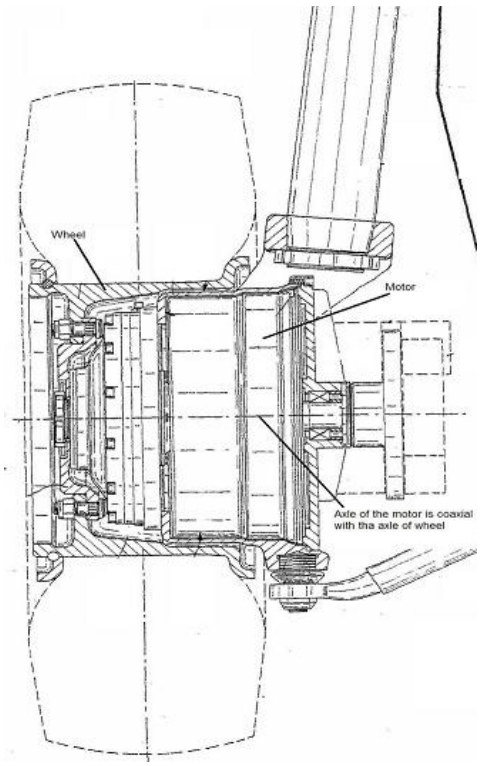

References

Informative references

Attention is drawn to the following places, which may be of interest for search:

Arrangement or mounting of electrical propulsion units	B60K 1/00
One motor mounted directly on a propulsion axle for rotating right and left wheels of this axle (for example using a differential between the motors and the driven wheels).	B60K 2001/001
Hybrid vehicles	B60K 6/00
Arrangement in connection of cooling a propulsion unit	B60K 11/00
Transmission disposed in or adjacent the vehicle wheel	B60K 17/043
Wheelchairs	A61G 5/00
Resilient suspensions	B60G 3/00
Electric equipment or propulsion of electrically propelled vehicles	B60L
Arrangements of braking elements	B60T 1/00
Steering linkages	B62D 7/00
Dynamo electric machines (electric motors)	H02K

Special rules of classification

Use of the Indexing Code scheme is mandatory for this main group. Addition information should be given in B60K 17/043 if a transmission is used.

Glossary of terms

In this place, the following terms or expressions are used with the meaning indicated:

In, or adjacent to	there is one motor to drive one wheel (or one dual wheels). No differential therebetween.

B60K 8/00

Arrangement or mounting of propulsion units not provided for in one of the preceding main groups

Definition statement

This place covers:

These groups comprise documents concerning the arrangement of a motor in a vehicle. The drive motor per se should be classified elsewhere.

References

Informative references

Attention is drawn to the following places, which may be of interest for search:

Hot gas displacement engines, use of waste heat of combustion engines	F02G
Spring, weight inertia or like motors	F03G

B60K 11/00

Arrangement in connection with cooling of propulsion units (heating the interior space B60H; cooling internal combustion engines per se F01P)

Definition statement

This place covers:

Documents concerning the arrangement in connection with cooling of the propulsion units in the vehicle.

References

Limiting references

This place does not cover:

Combustion air intakes	B60K 13/00
Cooling of internal combustion engines	F01P
Ventilators, fans	F04D
Radiators	F28F

Informative references

Attention is drawn to the following places, which may be of interest for search:

Arrangement of heat exchanger/condenser/evaporator for passenger spaces of vehicles	B60H 1/3227
Sound isolating elements	B60R 13/08
With multiple heat exchangers	F01P 2003/182
Guiding or ducting air to, or from, ducted fan	F01P 5/06
Guiding or ducting cooling air	F01P 11/10
Filtering, silencing cooling air	F01P 11/12

B60K 11/02

with liquid cooling

Definition statement

This place covers:

These groups comprise an arrangement whereby the element to be cooled (for example the motor) is cooled by liquid.

References

Limiting references

This place does not cover:

Air inlets	B60K 11/08

B60K 11/04

Arrangement or mounting of radiators, radiator shutters, or radiator blinds {(B60K 11/085 takes precedence)}

Definition statement

This place covers:

- Mounting or arrangement of radiators
- Radiator shutters or blinds mounted directly on the radiator.

References

Limiting references

This place does not cover:

Shutters or blinds in the air Inlet; details of the air inlet	B60K 11/08
Combustion air intakes	B60K 13/00
Cooling of internal combustion engines	F01P
Arrangement or mounting of radiator	F01P 3/18
Radiators	F28F

Special rules of classification

Invention classification is given only when the fixing part is on the vehicle. When the fixing part is on the radiator, see groups F01P 3/18 or F28F.

B60K 11/06

with air cooling

Definition statement

This place covers:

These groups comprise an arrangement whereby the element to be cooled (for example the motor) is cooled by air. The way the air is ducted to a radiator (air to liquid heat exchanger) is therefore classified in groups B60K 11/02 or B60K 11/08.

B60K 11/08

Air inlets for cooling; Shutters or blinds therefor {(radiator or grille guards B60R 19/52)}

Definition statement

This place covers:

Also air guiding walls in the air inlet passage.

References

Limiting references

This place does not cover:

Shutters or blinds directly mounted for the radiator	B60K 11/04

Informative references

Attention is drawn to the following places, which may be of interest for search:

Guiding or ducting cooling air to, or from, liquid to air heat exchangers	F01P 11/10

Glossary of terms

In this place, the following terms or expressions are used with the meaning indicated:

Air Inlet	space between the car body opening to the radiator (directly on the radiator: see B60K 11/04, after the radiator: see B60K 11/02 or B60K 11/06)

B60K 11/085

{with adjustable shutters or blinds}

References

Informative references

Attention is drawn to the following places, which may be of interest for search:

Controlling of coolant flow for engines by throttling amount of air flowing to heat exchanger	F01P 7/10
Air flow control member (e.g. louvres, grilles or flaps) in air conditioning apparatus	F24F 13/08
Using more than one tilting member	F24F 13/1413
With parallel lamellae	F24F 13/15

B60K 13/00

Arrangement in connection with combustion air intake or gas exhaust of propulsion units (extensions for melting snow or ice on roads or like surfaces E01H 5/00, E01H 6/00; forming part of the engine F01N; supplying combustion engines with combustible mixtures or constituents F02M)

Definition statement

This place covers:

arrangement in the vehicle of combustion air intake or gas exhaust of propulsion unit.

References

Limiting references

This place does not cover:

Gas exhausts per se	F01N
Air intakes/cleaners for combustion motor	F02M 35/00
Pipes in general	F16L

Informative references

Attention is drawn to the following places, which may be of interest for search:

Additives to exhaust also	F01N, F01N
Pipes used for noise absorbing in form of hangers or supports	F16L 55/035

B60K 13/02

concerning intake

Definition statement

This place covers:

This group comprises for example arrangement of air intake in the car body and the arrangements made in the vehicle between the air intake to the air cleaner.

References

Limiting references

This place does not cover:

Supplying combustion engine with combustible mixture or constituents thereof	F02M
Combustion-air cleaners, air intakes, intake silencers, or induction systems for internal-combustion engines	F02M 35/00
Air intake with filter	F02M 35/024
Arrangement of the air intake system in the engine compartment.	F02M 35/161

Informative references

Attention is drawn to the following places, which may be of interest for search:

Bumper	B60R 19/00
Intercooler	F02B 29/04

B60K 13/04

concerning exhaust ({collecting exhaust gases with central suction systems not forming part of vehicles, e.g. in workshops or tunnels B08B 15/002, otherwise along carriageways E01C 1/005;} extensions for melting snow on roads E01H 5/00, E01H 6/00; exhaust or silencing apparatus for internal combustion engines per se F01N; {pipes, joints or supports therefor F16L})

Definition statement

This place covers:

Specific arrangement in the vehicle of exhaust element or structure used to fasten exhaust element to a vehicle if the invention is on the vehicle side (special adaptation of the vehicle structure) and not on the exhaust side.

- Fixing element of the exhaust if the invention is related to the fixing element mounted on the vehicle frame and not on the exhaust, e.g. fixing bracket adapted to vehicle frame.
- Arrangement of a urea tank in the vehicle.

References

Limiting references

This place does not cover:

Thermal isolation	F01N 13/14

Fixing exhaust manifold, exhaust pipes to the vehicle body	F01N 13/1805

Informative references

Attention is drawn to the following places, which may be of interest for search:

Exhaust or silencing apparatus	F01N

Special rules of classification

"Fixing means for the exhaust manifold or exhaust pipes to the vehicle body" are not classified in B60K 13/04 but in F01N 13/1805. These groups only comprise arrangement of the vehicle frame for mounting the exhaust, like for example, a specific fixing bracket on the vehicle frame. Further examples of documents classified in B60K 13/04 could be a pipe or a urea tank extending through a specific area in the vehicle.

B60K 13/06

using structural parts of the vehicle as ducts, e.g. frame parts

References

Informative references

Attention is drawn to the following places, which may be of interest for search:

A specific form of the carroserie to duct the air in an air intake	B62D
Understructure forming fluid or electrical conduit means	B62D 21/17
Superstructure	B62D 25/00
Floor or bottom sub- units	B62D 25/20

B60K 15/00

Arrangement in connection with fuel supply of combustion engines {or other fuel consuming energy converters, e.g. fuel cells}; Mounting or construction of fuel tanks (tanks in general B65D, F17C; supplying combustion engines with combustible mixtures or constituents F02M)

Definition statement

This place covers:

Arrangement of tanks in connection with fuel supply of combustion engines. Also for arrangement of gas tank in the vehicle.

References

Limiting references

This place does not cover:

Arrangement of the urea tank in the vehicle	B60K 13/04
Tank vehicles	B60P 3/22
Fuel tanks specially adapted for motor cycles	B62J 35/00
Tank for aircraft	B64D 37/02

Urea Tank	F01N 2610/148

Informative references

Attention is drawn to the following places, which may be of interest for search:

Delivering dispensing transferring liquid to reservoir of vehicle	B67D 7/00
Controlling the feeding of liquid fuel from storage container to carburettors.	F02D 33/003
Supplying combustion engine with combustible mixture or constituent thereof.	F02M
Apparatus for feeding liquid fuel from storage container to carburettors.	F02M 37/00
Valves	F16K
Gas tank in general	F17C
Measuring liquid level	G01F 23/00
Fuel cell	H01M 8/00
Reactant storage in fuel cell	H01M 8/04201

B60K 15/01

Arrangement of fuel conduits (chassis frame forming fluid conduit means B62D 21/17)

References

Informative references

Attention is drawn to the following places, which may be of interest for search:

Injection moulding	B29C 45/00
Layered tubular products	B62B 1/08
Pipes in general and connection thereof	F16L

B60K 15/03

Fuel tanks (chassis frame comprising fluid storage compartment B62D 21/16; {Details of the fuel feeding system related to the fuel tank F02M 37/0076})

References

Informative references

Attention is drawn to the following places, which may be of interest for search:

Arrangement of the urea tank in the vehicle	B60K 13/04
Additives to exhaust (urea)	F01N 3/2066
Urea tanks per se (storage means for substances, e.g. tanks or reservoirs)	F01N 2610/1406
Constructional details; Manufacturing or assembly of elements of fuel system; Materials therefor	F02M 37/0011

Fuel feeding system for combustion engine for multiple separate fuel tanks	F02M 37/0088
Fuel feeding system for combustion engine for saddle tanks	F02M 37/0094
Armoured vehicle	F41H

B60K 15/03006

{Gas tanks (B60K 15/07 takes precedence)}

References

Limiting references

This place does not cover:

Of gas tanks	B60K 15/07

Informative references

Attention is drawn to the following places, which may be of interest for search:

Engines characterised by operating on gaseous fuels; Plants including such engines	F02B 43/00
Controlling engines characterised by their use of non-liquid fuels, pluralities of fuels, or non-fuel substances added to the combustible mixtures	F02D 19/00
Apparatus for supplying engines with non-liquid fuels, e.g. gaseous fuels stored in liquid form	F02M 21/00
Vessels for containing or storing compressed, liquefied or solidified gases; fixed capacity gas holders	F17C
Pressure vessels, gas tank	F17C 1/00
Pipe-line systems for liquid gas	F17D 1/08

B60K 15/03177

{made of non-metallic material, e.g. plastics, or of a combination of non-metallic and metallic material (B60K 15/03006 takes precedence)}

References

Limiting references

This place does not cover:

Gas tanks	B60K 15/03006

Informative references

Attention is drawn to the following places, which may be of interest for search:

Blow moulding	B29C 49/00
Blow moulding with insert	B29C 49/20
For specific joining process	B29C 65/00

Welding	B29C 65/02
Riveting	B29C 65/60
Joining elements to hollow article	B29C 65/7802
Shaping techniques and joining techniques together	B29C 69/00
For layered tanks	B32B 27/00

Special rules of classification

Specific fabrication process should be classified in B29C or B32B.

B60K 15/035

characterised by venting means

References

Limiting references

This place does not cover:

Apparatus for adding fuel vapours drawn from engine fuel reservoir	F02M 25/08

Informative references

Attention is drawn to the following places, which may be of interest for search:

Valves	F16K
Arrangements for preventing explosion of gas bottles	F17C 13/12

B60K 15/03504

{adapted to avoid loss of fuel or fuel vapour, e.g. with vapour recovery systems}

References

Limiting references

This place does not cover:

Adding fuel vapours drawn from engine fuel reservoir	F02M 25/08
Judging failure of purge control system	F02M 25/0809
Arrangement of valves controlling the admission of fuel vapour to an engine, e.g. valve being disposed between fuel tank or absorption canister and intake manifold	F02M 25/0836
Details of the absorption canister	F02M 25/0854
Details of the fuel vapour pipes or conduits	F02M 25/0872
Layout of the fuel vapour installation	F02M 25/089

B60K 15/03519

{Valve arrangements in the vent line}

References

Limiting references

This place does not cover:

Arrangement of valves controlling the admission of fuel vapour to an engine, e.g. valve being disposed between fuel tank or absorption canister and intake manifold	F02M 25/0836
Details of the fuel vapour pipes or conduits	F02M 25/0872
Layout of the fuel vapour installation	F02M 25/089

B60K 15/04

Tank inlets (B60K 15/077 takes precedence)

References

Limiting references

This place does not cover:

With means modifying or controlling distribution or motion of fuel	B60K 15/077
Inlet and filling arrangements for urea tanks	F01N 2610/1413

Informative references

Attention is drawn to the following places, which may be of interest for search:

Filters rigidly mounted on reservoirs or tanks	B01D 35/027
Manufacturing process	B29C, B32B
Supplying fuel to vehicle	B60S 5/02
Apparatus or devices for transferring liquids	**B67D5/00**
Arrangements for controlling, indicating registering quantity or price of liquid transferred	**B67D5/08**

B60K 15/0406

{Filler caps for fuel tanks}

Definition statement

This place covers:

Filler caps is the detachable/movable cap at the end of the inlet pipe.

References

Informative references

Attention is drawn to the following places, which may be of interest for search:

Closure caps for liquid coolant	F01P 11/0209
Sealing in general	F16J 15/00

Special rules of classification

A flap/baffle/trap door inside of the pipe is not considered as been a filler cap and should be classified in B60K 15/04

B60K 15/0409

{Provided with a lock}

References

Informative references

Attention is drawn to the following places, which may be of interest for search:

Lock in general	E05B
Electrically actuated locks	E05B 47/0001
For fuel inlet covers of vehicle	E05B 83/34

B60K 15/05

Inlet covers

Definition statement

This place covers:

Details of the inlet covers and inlet box

References

Informative references

Attention is drawn to the following places, which may be of interest for search:

Superstructure sub-units with access opening having movable or removable closures	B62D 25/24
Superstructure sub-units with access or drainage openings having movable or removable closures	B62D 25/24
Lock in general	E05B
Electrically actuated locks	E05B 47/0001
For fuel inlet covers of vehicle	E05B 83/34
(for fuel inlet covers)	E05B 83/34
Hinges or pivots for doors in general	E05D 7/00

B60K 15/06

characterised by fuel reserve systems

References

Informative references

Attention is drawn to the following places, which may be of interest for search:

Filtering elements in the tanks	B01D 35/027
Fuel tanks specially adapted for motor cycles	B62J 35/00
Feeding apparatus for carburettors with multiple separate fuel tanks	F02M 37/0088
Mounting of pumps on fuel tank	F02M 37/103
The pump being installed in a sub tank	F02M 37/106
Apparatus for feeding liquid fuel to the carburettors with a main and auxiliary pump	F02M 37/18

B60K 15/061

{with level control}

References

Informative references

Attention is drawn to the following places, which may be of interest for search:

Controlling the feeding of liquid fuel from the tank to the carburettors	F02D 33/003
Devices of the fuel feeding system inside the tank other than pumps or filter	F02M 37/0082
Measuring liquid level	G01F 23/00

B60K 15/063

Arrangement of tanks

Definition statement

This place covers:

In particular tanks having a specific position in the vehicle

References

Informative references

Attention is drawn to the following places, which may be of interest for search:

Arrangement of the urea tank in the vehicle	B60K 13/04
Understructure having a fluid storage compartment	B62D 21/16
Floor and bottom sub units of the superstructure of the vehicle	B62D 25/20
Urea Tank	F01N 2610/148
Engine working with a plurality of fuel	F02D 19/06

B60K 15/07

of gas tanks

References

Informative references

Attention is drawn to the following places, which may be of interest for search:

Mounting arrangements for vessels	F17C 13/08

B60K 15/073

Tank construction specially adapted to the vehicle (B60K 15/077 takes precedence)

Definition statement

This place covers:

Fuel container shape designed to fit framework

References

Informative references

Attention is drawn to the following places, which may be of interest for search:

Tanks specially adapted for motor cycles	B62J 35/00
Saddle tanks in feeding apparatus for the carburettors	F02M 37/0094

B60K 15/077

with means modifying or controlling distribution or motion of fuel, e.g. to prevent noise, surge, splash or fuel starvation

Definition statement

This place covers:

Container including devices to influence the motion or distribution of the fuel, e.g. swirl pots or fuel level control between dual tanks.

References

Informative references

Attention is drawn to the following places, which may be of interest for search:

Anti-slosh devices in large containers	B65D 90/52
Details on the fuel return circuit	F02M 37/0052
Feeding by a liquid fuel driven jet pump	F02M 37/025
Submerged in fuel, e.g. in reservoir	F02M 37/10
Mounting pumps on fuel tanks	F02M 37/103
The pump being installed in a sub-tank	F02M 37/106
Feeding apparatus characterized by main and auxiliary pump	F02M 37/18

B60K 15/10

concerning gas-producing plants

Definition statement

This place covers:

Plants mounted in the vehicle and used for producing gas for the propulsion of the vehicle

References

Informative references

Attention is drawn to the following places, which may be of interest for search:

Electric vehicle using power supply from primary cells, secondary cells, or fuel cells	B60L 11/18
Combustion engine using plants for generating gaseous fuel from solid fuel.	F02B 43/08
Fuel cells	H01M 8/00
Fuel cells combines with other electrochemical generator	H01M 16/003

B60K 16/00

Arrangements in connection with power supply of propulsion units in vehicles from force of nature, e.g. sun or wind (electric propulsion with power supply from force of nature, e.g. sun or wind, B60L 8/00; effecting propulsion by wind motors driving water-engaging propulsive elements B63H 13/00; wind motors specially adapted for installation on vehicles F03D 9/32)

References

Limiting references

This place does not cover:

Electric vehicles with power supply from force of nature, e.g. wind, sun	B60L 8/00
Rider propulsion of wheeled vehicle with additional power source comprising solar cells	B62M 6/85

Informative references

Attention is drawn to the following places, which may be of interest for search:

Wind motors;	F03D
controlling	F03D 7/00
Alleged perpetua mobilia;	F03G 7/10
- of buoyancy principle	F03B 17/04
Circuit for charging battery comprising light sensitive cells	H02J 7/355

B60K 17/00

Arrangement or mounting of transmissions in vehicles (clutches per se, e.g. construction thereof, F16D; gearing per se, e.g. construction thereof, F16H)

Definition statement

This place covers:

This group is given only if there is a specific arrangement/montage of the transmission in the vehicle. The different elements of the transmission per see are classified elsewhere and should not be classified in B60K 17/00 (F16H Gearings, F16D Clutches...). Even the connection between the elements is to be classified elsewhere in most of the case (see for example H02K 7/10 Structural association of electric machines with clutches, brakes, gears etc.)

References

Informative references

Attention is drawn to the following places, which may be of interest for search:

Control of transmission	B60K 23/00
Suspension for vehicle	B60G
Conjoin control of propulsion units	B60W 30/18
Steering of deflectable wheels	B62D 9/00
Steering non deflectable wheels by differentially driving ground engaging elements on opposite sides of the vehicle	B62D 11/02
Understructures	B62D 21/00
Endless track vehicles	B62D 55/00
Assembling motor vehicles by joining sub-units or components, the components being engines, clutches or transmissions, with respect to the body shell or other sub-units or components.	B62D 65/10
Combinations of engines with mechanical gearing	F02B 61/06
Clutches in general, e.g. construction thereof.	F16D
Suppression of vibrations	F16F
Gearing in general, e.g. construction thereof.	F16H

B60K 17/02

characterised by arrangement, location, or kind of clutch

References

Informative references

Attention is drawn to the following places, which may be of interest for search:

Braking elements acting on transmission parts	B60T 1/062
Control of drivelines clutches and change speed gearing speed in vehicles	B60W 10/02, B60W 10/10
Steering non deflectable wheels using brakes or clutches as main steering effecting means	B62D 11/08
Vehicles with variable number of ground engaging wheels	B62D 61/12

Clutches per se, e.g. construction thereof; Control of clutches	F16D
Clutches with interengaging parts	F16D 11/00
Friction clutches	F16D 13/00
Fluid actuated clutches	F16D 25/00
Magnetically actuated clutches	F16D 27/00
Automatic clutches	F16D 43/00

B60K 17/04

characterised by arrangement, location, or kind of gearing (electric equipment or propulsion of electrically-propelled vehicles B60L)

References

Limiting references

This place does not cover:

Hybrid vehicles	B60K 6/00
Transmission gearings specially adapted for hybrid vehicles	B60K 6/36
Relative disposition of components in hybrid propulsion (combustion engine and electromotor)	B60K 6/40
Architecture of the driveline in hybrid vehicles	B60K 6/50
Arrangement of propulsion on amphibious vehicle	B60F 3/0007
Combinations of mechanical gearings	F16H 37/00
Combinations of mechanical gearing with fluid gearing	F16H 47/00
Gearboxes, Mounting gearing therein	F16H 57/02
Support of transmission casing, e.g. torque arms, or attachment to other devices	F16H 57/025
Gearboxes using a combination of several standardised units	F16H 57/033
Lubrication / cooling of gearings	F16H 57/04

B60K 17/043

{Transmission unit disposed in on near the vehicle wheel, or between the differential gear unit and the wheel}

References

Informative references

Attention is drawn to the following places, which may be of interest for search:

Motor arranged in or near the wheels	B60K 7/00
Suspension	B60G
Brake	B60T
Steering linkage	B62D 7/00

Structural association of electric machines with clutches brakes, gears, pulleys or mechanical starter	H02K 7/10
Association of electric motors with gears	H02K 7/116
Counter rotating rotors of electric machines	H02K 16/005

Special rules of classification

Code for additional information B60K 17/043 is systematically given for documents classified in group B60K 7/00 having a transmission gear between motor and vehicle wheel.

B60K 17/046

{with planetary gearing having orbital motion}

Definition statement

This place covers:

Illustrative example of subject matter classified in this group:

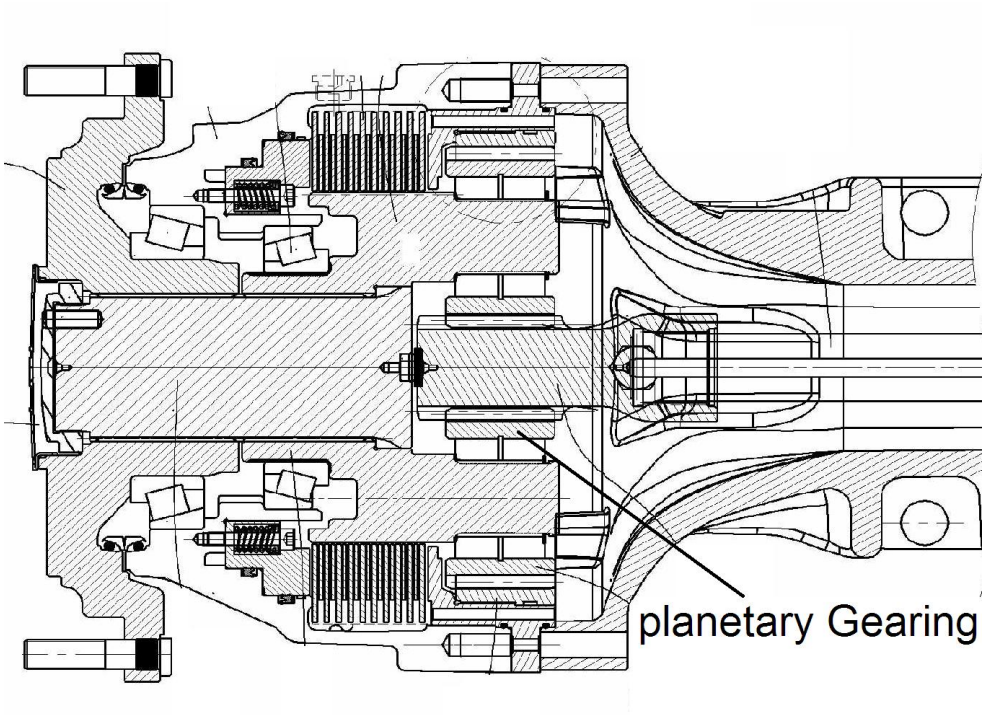

References

Limiting references

This place does not cover:

Gearings with gears having orbital motion	F16H 1/00
Gearing with variable gear ratio using gear having orbital motion	F16H 3/44
Lubrication/cooling of planetary gearings	F16H 57/0482

B60K 17/06

of change-speed gearing (B60K 17/10 - B60K 17/16 take precedence)

References

Limiting references

This place does not cover:

of fluid gearing	B60K 17/10
of differential gearing	B60K 17/16
Gearing with variable gear ratio	F16H 3/00

B60K 17/10

of fluid gearing (of fluid clutches B60K 17/02)

References

Limiting references

This place does not cover:

Fluid or electric gearing with a motor near the wheel	B60K 17/14

Informative references

Attention is drawn to the following places, which may be of interest for search:

Pumps: positive displacement machines for liquids	F04B
Machines for liquids or pumps of rotary piston or oscillating piston type	F04C
Non positive displacement pumps	F04D
Pumping of fluid by direct contact of another fluid or by using inertia of fluid to be pumped	F04F
Rotary fluid gearing using pumps and motors of the volumetric type	F16H 39/00
Combinations of mechanical gearing with fluid clutches or gearings	F16H 47/00
Control of hydrostatic gearings	F16H 61/40

B60K 17/105

{Units comprising at least a part of the gearing and a torque-transmitting axle, e.g. transaxles (B60K 17/14 takes precedence)}

Definition statement

This place covers:

Illustrative example of subject matter classified in this group.

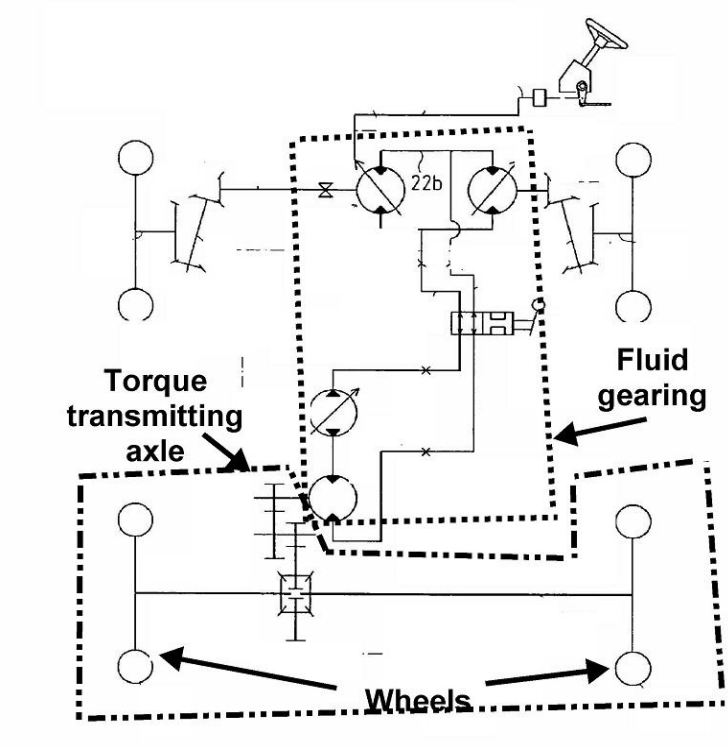

References

Limiting references

This place does not cover:

The motor of fluid or electric gearing being disposed in or adjacent to traction wheel	B60K 17/14

B60K 17/12

of electric gearing (of electrically-actuated clutches B60K 17/02)

References

Limiting references

This place does not cover:

Arrangement of electric propulsion units	B60K 1/00
Motors disposed in the wheels	B60K 7/00
Arrangement in the vehicle of electric actuated clutches.	B60K 17/02
Fluid or electric gearing with a motor near the wheel	B60K 17/14

Electric equipment or propulsion of electrically propelled vehicles	B60L
Electric device for safety purposes, monitoring variables on electric vehicles	B60L 3/00
Electric propulsion with power supplied within the vehicle	B60L 11/00
Methods for controlling the speed/torque of electric vehicles	B60L 15/00
Conjoint control including the control of electric propulsion units	B60W 10/08
Electric control of combustion engine	F02D 11/10
Dynamo electric clutches or brakes	**H02F49/00**
Dynamo- Electric gears, i.e. dynamo electric means for transmitting mechanical power from a driving shaft to a driven shaft and comprising Structurally interrelated motor and generator parts	H02K 51/00

B60K 17/14

the motor of fluid or electric gearing being disposed in or adjacent to traction wheel (B60K 7/00 takes precedence)

Definition statement

This place covers:

Electric or fluid gearing whereby the motor (electric or hydraulic) is disposed in or adjacent to the traction wheel. In these groups are in particular documents showing "electric or hydraulic differential".

References

Limiting references

This place does not cover:

Arrangement of the motor in the wheel	B60K 7/00
Steering of non deflectable wheels using gearings with differential power outputs on opposite sides;the additional power being supplied hydraulically	B62D 11/10, B62D 11/18
Rotary fluid gearing using pumps and motors of the volumetric type	F16H 39/00

Informative references

Attention is drawn to the following places, which may be of interest for search:

Hydraulic motors	F03C

Glossary of terms

In this place, the following terms or expressions are used with the meaning indicated:

In, or adjacent to	there is one motor to drive one wheel (or one dual wheels). No differential therebetween.

B60K 17/16

of differential gearing

Definition statement

This place covers:

Arrangement of differential gearings in the vehicle.

References

Limiting references

This place does not cover:

Central differential for front and rear wheels driving	B60K 17/348, B60K 17/346
Mounting of ball or roller bearing, fixing them onto shaft or in housing	F16C 35/06
Universal joints	F16D 3/16
Differential gearing	F16H 48/00
Mechanical differentials gearings without member having orbital motion	F16H 48/12
Mounting or installation of gears in the gearbox casing	F16H 57/023
Housing for gearboxes with means for reducing vibrations	F16H 57/028
Gearboxes for accommodating differential gearings	F16H 57/037
Cooling/lubrication of differential gearings	F16H 57/0483
Electric motor structurally associated with gears	H02K 7/116

Informative references

Attention is drawn to the following places, which may be of interest for search:

Gearings per se	F16H

Glossary of terms

In this place, the following terms or expressions are used with the meaning indicated:

Axle units with differential	rigid casings comprising wheel drive shafts, bearings therefore and a differential, e.g. casing made of pressed sheet metal (see also axle units B60B 35/00, gearboxes with integrated axle drive).
Differential gearing	Differential or means having the same function

B60K 17/165

{provided between independent half axles (B60K 17/18, B60K 17/20 take precedence)}

Definition statement

This place covers:

More the arrangement of such a differential in the vehicle

References

Limiting references

This place does not cover:

Arrangement or mounting of transmissions in vehicles in which the differential movement is obtained by resilient means	B60K 17/18
Arrangement or mounting of transmissions in vehicles in which the differential movement is limited	B60K 17/20
Steering deflectable wheels with means for differentially distributing power on the deflectable wheels during cornering	B62D 9/00
Arrangement for suppressing or influencing the differential action, e.g. locking devices	F16H 48/20

B60K 17/18

{in which the differential movement is obtained by resilient means}

Definition statement

This place covers:

Arrangement in the vehicle of differential means, whereby the difference of rotation speed between the two output shafts of the differential means is obtained using resilient means.

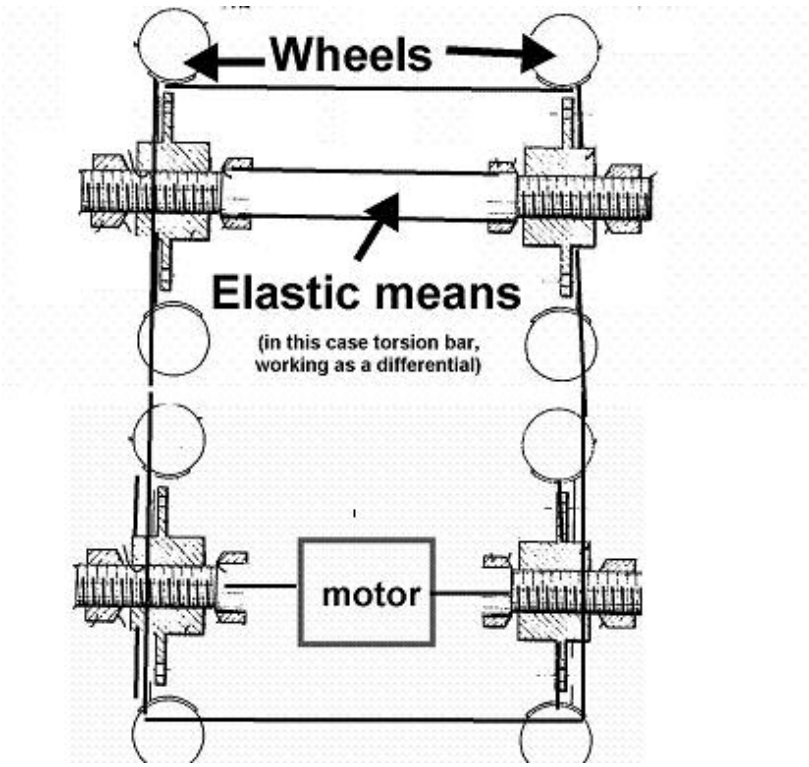

B60K 17/20

{in which the differential movement is limited}

References

Limiting references

This place does not cover:

The transfer gear being a differential gear	B60K 17/346
Arrangement of control for differentials	B60K 23/04
Combinations of mechanical gearing having orbital motion with fluid clutches	F16H 47/08
Arrangement for suppressing or influencing the differential action, e.g. locking devices	F16H 48/20

Informative references

Attention is drawn to the following places, which may be of interest for search:

Differentials with electric motor for torque vectoring per se	F16H 48/36

B60K 17/22

characterised by arrangement, location, or type of main drive shafting, e.g. cardan shaft

References

Informative references

Attention is drawn to the following places, which may be of interest for search:

Torque transmitting axles for the wheels	B60B 35/12
Shafts	F16C
Shaft, axle	F16C 3/00
Bearings of crankshafts or connecting rod in general	F16C 9/00
Elastic or yielding bearings for exclusively rotary movement	F16C 27/00
Couplings fro transmitting rotation	F16D
Suppression of vibration	F16F 15/00

B60K 17/26

characterised by arrangement, location, of type of freewheel device

References

Informative references

Attention is drawn to the following places, which may be of interest for search:

Arrangement of control for freewheels	B60K 23/06
Freewheels or freewheel clutches per see	F16D 41/00

Automatic clutches actuated entirely mechanically	F16D 43/02
Differential gearings without members having orbital motion	F16H 48/12

B60K 17/28

characterised by arrangement, location, or type of power take-off

Definition statement

This place covers:

Gearings comprising a power take off, which is for "extern" devices and not for other part of the vehicle like alternator, pump, fan for motor cooling etc.

References

Limiting references

This place does not cover:

Auxiliary drives from the transmission power take off (for example if the document describes a connection between the power take off shaft and the driven device	B60K 25/06
"Clutch-brake combinations" if it concerns the connection/disconnection of the power take off	F16D 67/02

Informative references

Attention is drawn to the following places, which may be of interest for search:

Auxiliary drives from the transmission power take-off if for example it is a connection between the power take-off shaft and the driven device	B60K 25/06
Tractors	B62D 49/00
Clutch-brake combinations if it concerns the connection disconnection of the power take off	F16D, F16D 67/02
Combination of mechanical gearing with fluid clutches or fluid gearings	F16H 47/00

B60K 17/30

the ultimate propulsive elements, e.g. ground wheels, being steerable

References

Informative references

Attention is drawn to the following places, which may be of interest for search:

Motor disposed in the wheels	B60K 7/00
Steering controls, i.e. means for initiating a change of direction of the vehicle	B62D 1/00
Steering linkage, Stub axles or their mounting	B62D 7/00
Steering knuckles; king pins	B62D 7/18
Universal joints	F16D 3/16

B60K 17/303

{with a gearwheel on the steering knuckle or kingpin axis}

Definition statement

This place covers:

The ultimate propulsive element is steerable and the propulsive gearwheel being located on the steering knuckle or arranged in line with the kingpin axis.

Illustrative example of subject matter classified in this group:

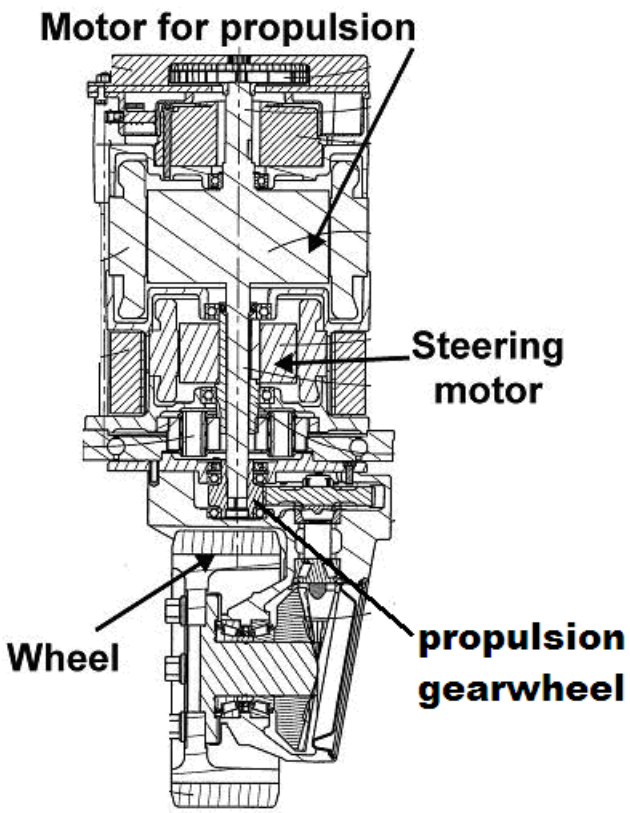

References

Informative references

Attention is drawn to the following places, which may be of interest for search:

Device for lifting or lowering bulky or heavy goods for loading and unloading purposes	B66F 9/00

B60K 17/306

{with a universal joint in the axis of the steering knuckle}

Definition statement

This place covers:

Illustrative example of subject matter classified in this group.

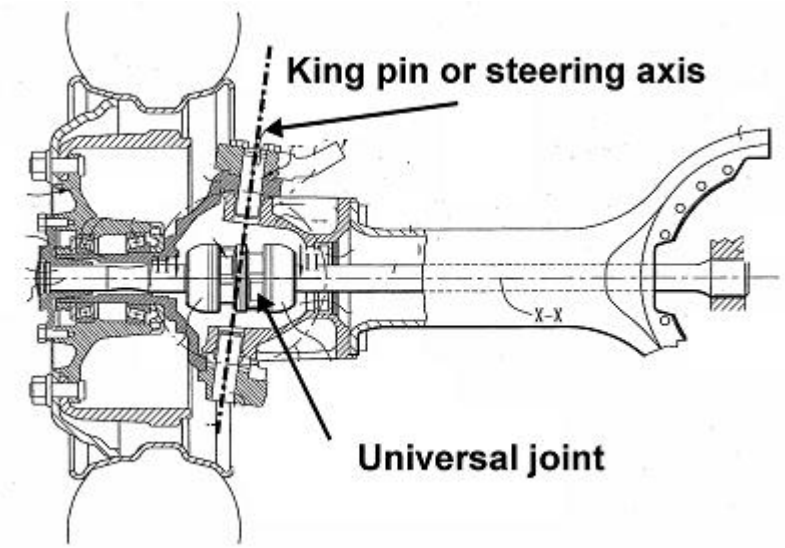

B60K 17/32

the ultimate propulsive elements, e.g. ground wheels, being rockable about a horizontal pivot

Definition statement

This place covers:

Illustrative example of subject matter classified in this group.

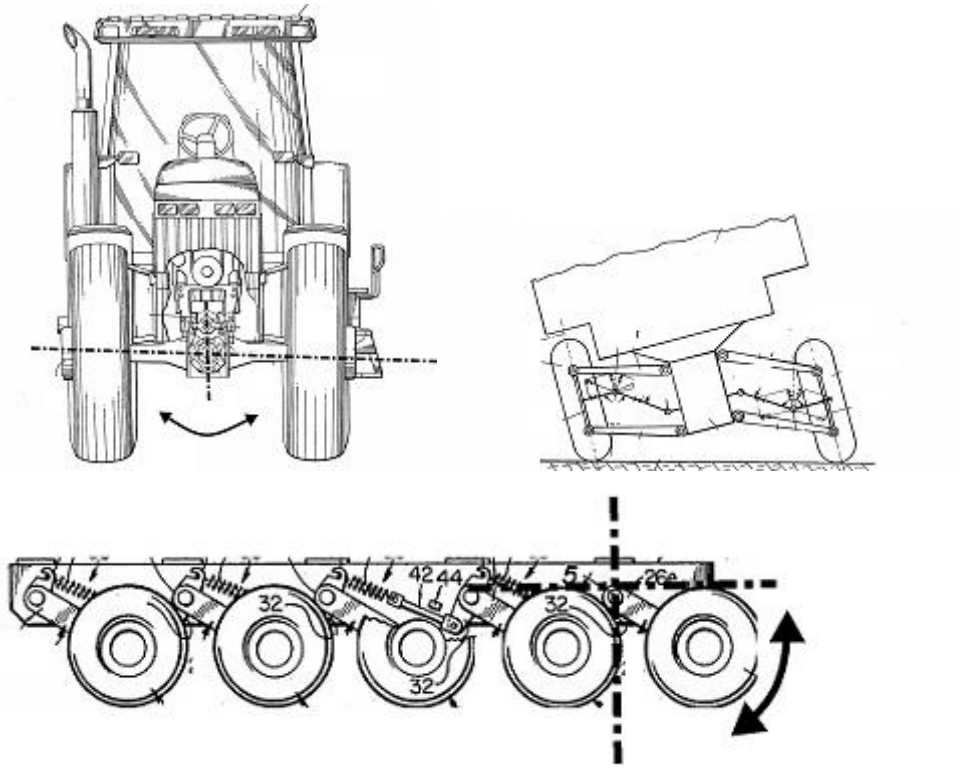

References

Informative references

Attention is drawn to the following places, which may be of interest for search:

Suspensions	B60G
Vehicles with more than four wheels	B62D 61/10

B60K 17/34

for driving both front and rear wheels, e.g. four wheel drive vehicles (arrangement or mounting of control devices for changing number of driven wheels B60K 23/08)

Definition statement

This place covers:

in this particular case, all four wheel transmissions per see are classified in these groups and not only the arrangement in the vehicle.

References

Informative references

Attention is drawn to the following places, which may be of interest for search:

Arrangement of control devices for changing the number of driven wheels	B60K 23/08

B60K 17/342

having a longitudinal, endless element, e.g. belt or chain, for transmitting drive to wheels

References

Informative references

Attention is drawn to the following places, which may be of interest for search:

Arrangement of propulsion means on amphibious vehicles	B60F 3/0007
Vehicles with more than four wheels	B62D 61/10

B60K 17/344

having a transfer gear

Definition statement

This place covers:

Illustrative example of subject matter classified in this group.

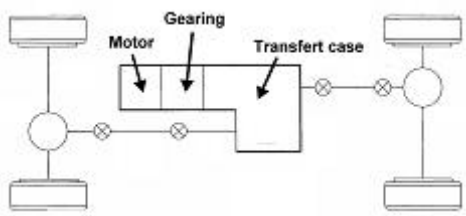

References

Limiting references

This place does not cover:

Cooling or lubrication of gearing	F16H 57/04

Informative references

Attention is drawn to the following places, which may be of interest for search:

Clutches	F16D

B60K 17/346

the transfer gear being a differential gear

Definition statement

This place covers:

Illustrative example of subject matter classified in this group.

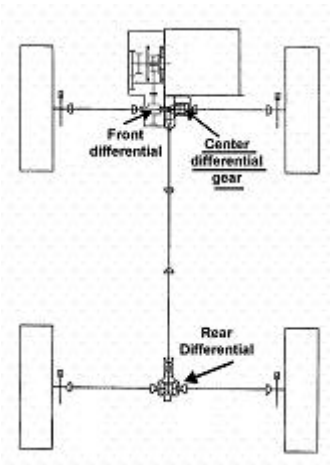

References

Informative references

Attention is drawn to the following places, which may be of interest for search:

Combinations of mechanical gearings with differential gearings and a plurality of driven shafts and one input shaft	F16H 37/0813
Differential gearings per se	F16H 48/00
Cooling lubrication of differentials	F16H 57/0483

B60K 17/3462

{with means for changing distribution of torque between front and rear wheels}

Definition statement

This place covers:

Transfer gears using for example clutches or differentials with a locking device. The locking device or other means for changing distribution of torque are arranged inside the transfer gear box.

References

Informative references

Attention is drawn to the following places, which may be of interest for search:

Arrangement of control devices for varying the torque distribution between the driven axles	B60K 23/0808
Arrangements for regulating the brake forces specially adapted for four-wheel drive vehicles	B60T 8/1769
Arrangements for suppressing or influencing the differential action per se	F16H 48/20

Glossary of terms

In this place, the following terms or expressions are used with the meaning indicated:

with	inside of the transfer gear box

B60K 17/3465

{self-actuated means, e.g. differential locked automatically by difference of speed}

Definition statement

This place covers:

Using typically viscous couplings (difference of speed) or torque sensing differentials arranged inside the transfer gear box.

Illustrative example:

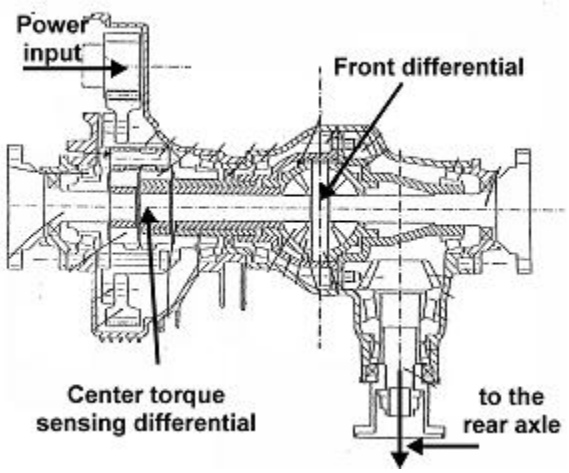

B60K 17/3467

{combined with a change speed gearing, e.g. range gear}

Definition statement

This place covers:

Illustrative example of subject matter classified in this group.

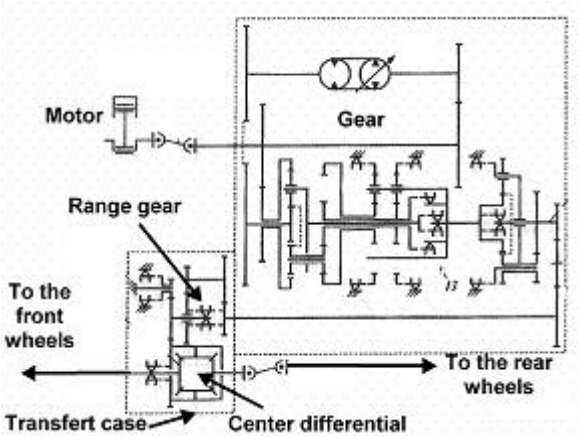

References

Informative references

Attention is drawn to the following places, which may be of interest for search:

Toothed gearings with variable gear ratio and having an orbital motion	F16H 3/44

B60K 17/348

having differential means for driving one set of wheels, e.g. the front, at one speed and the other set, e.g. the rear, at a different speed (B60K 17/346 takes precedence)

References

Limiting references

This place does not cover:

Having a transfer gear	B60K 17/344
The transfer gear being a differential gear	B60K 17/346

Informative references

Attention is drawn to the following places, which may be of interest for search:

Arrangement of control devices for varying the torque distribution between the driven wheels	B60K 23/0808

Glossary of terms

In this place, the following terms or expressions are used with the meaning indicated:

Differential means	means which permit the front and the rear axles to rotate at different speed like for example: clutches, viscous connecting means

B60K 17/35

including arrangements for suppressing or influencing the power transfer, e.g. viscous clutches (differential gearing with locking devices {F16H 48/20})

Definition statement

This place covers:

Illustrative example of subject matter classified in this group.

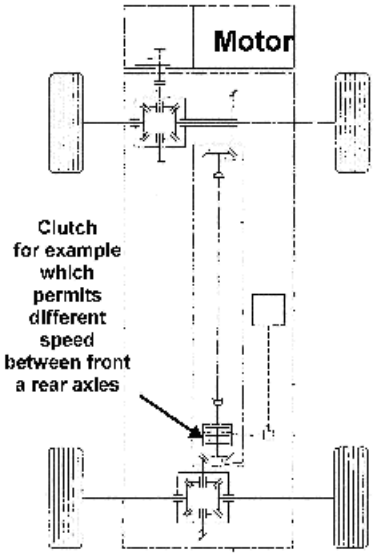

References

Limiting references

This place does not cover:

Having a transfer gear	B60K 17/344
Transfer gear with means for changing the distribution of torque between front and rear wheels	B60K 17/3462

Informative references

Attention is drawn to the following places, which may be of interest for search:

Arrangement of control devices for varying the torque distribution between the driven axles	B60K 23/0808
Clutches	F16D
Arrangements for suppressing or influencing the differential action per se	F16H 48/20

B60K 17/3505

{with self-actuated means, e.g. by difference of speed}

Definition statement

This place covers:

Front and rear wheel driven vehicle comprising a particular self actuated arrangement for influencing the power transfert between the front and the rear wheels

References

Limiting references

This place does not cover:

Transfer gear with self actuating means for changing the distribution of torque between rear and front wheels	B60K 17/3465

Glossary of terms

In this place, the following terms or expressions are used with the meaning indicated:

Self actuated	without using an external command. For example: one way clutch, viscous clutch

B60K 17/351

{comprising a viscous clutch}

Definition statement

This place covers:

Illustrative example of subject matter classified in this group.

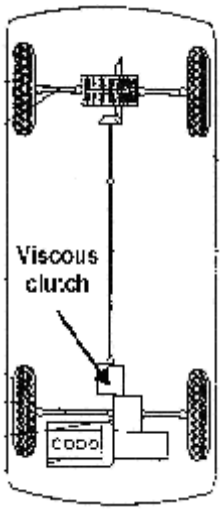

References

Limiting references

This place does not cover:

Transfer case having self actuated means (if for example the viscous clutch is in the transfer case housing)	B60K 17/3465

B60K 17/3515

{with a clutch adjacent to traction wheel, e.g. automatic wheel hub}

Definition statement

This place covers:

Illustrative example of subject matter classified in this group.

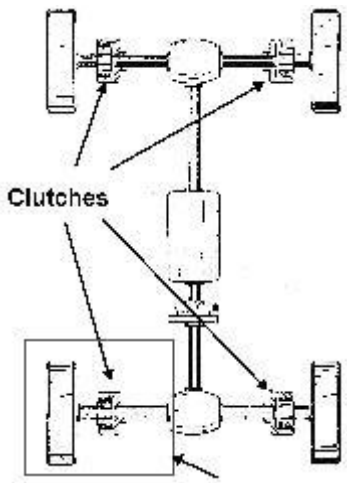

A driven wheel can be coupled independently.

References

Informative references

Attention is drawn to the following places, which may be of interest for search:

Clutches	F16D

Glossary of terms

In this place, the following terms or expressions are used with the meaning indicated:

Adjacent	between the wheel and the differential housing

B60K 17/352

{manually operated}

Definition statement

This place covers:

Illustrative example of subject matter classified in this group.

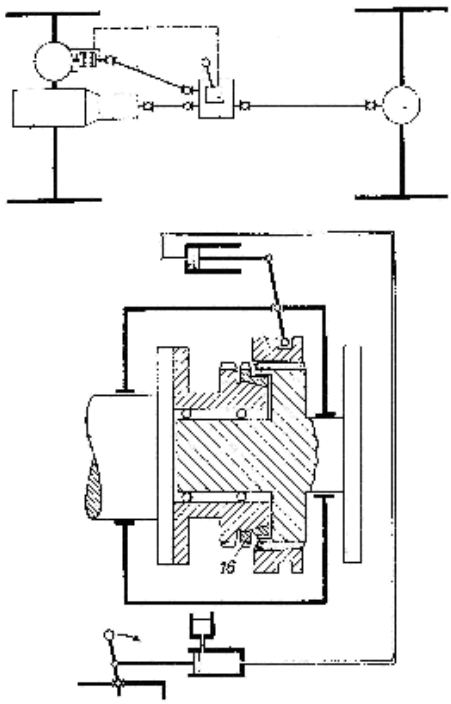

References

Informative references

Attention is drawn to the following places, which may be of interest for search:

Manually actuated mechanical control mechanisms	G05G 9/08

B60K 17/354

having separate mechanical assemblies for transmitting drive to the front or to the rear wheels or set of wheels

Definition statement

This place covers:

Illustrative examples of subject matter classified in this group.

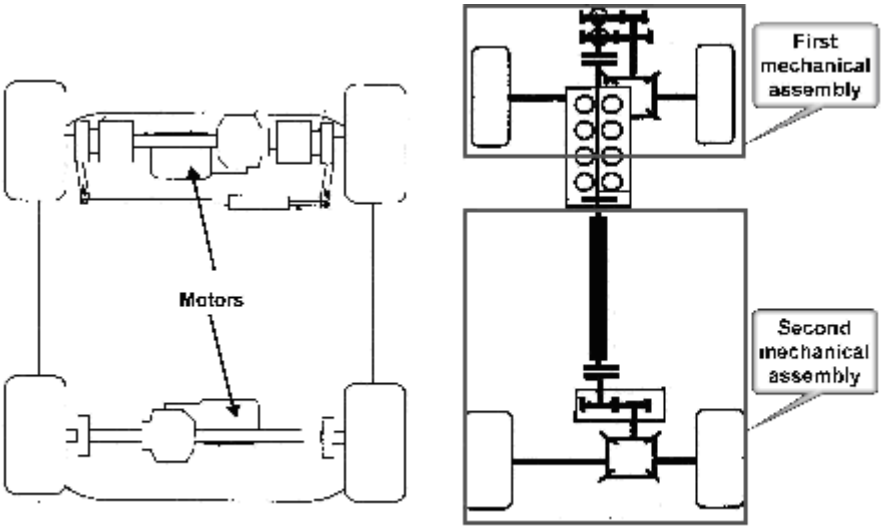

References

Informative references

Attention is drawn to the following places, which may be of interest for search:

Hybrid vehicles comprising electric and combustion engines	B60K 6/20
Hybrid vehicles driving a plurality of drive axles e.g. four wheel drive	B60K 6/52
Conjoin control including the control of driveline clutches	B60W 10/02
Conjoin control including the control of propulsion units	B60W 10/04
Conjoin control for hybrid vehicle characterized by a method for conjointly controlling different sub units	B60W 20/00

B60K 17/356

having fluid or electric motor, for driving one or more wheels (disposition of motor in, or adjacent to, traction wheel B60K 7/00)

Definition statement

This place covers:

The transmissions which comprise a main assembly for transmitting power and furthermore a fluid or electric motor(s) for driving one or more wheels. Examples:

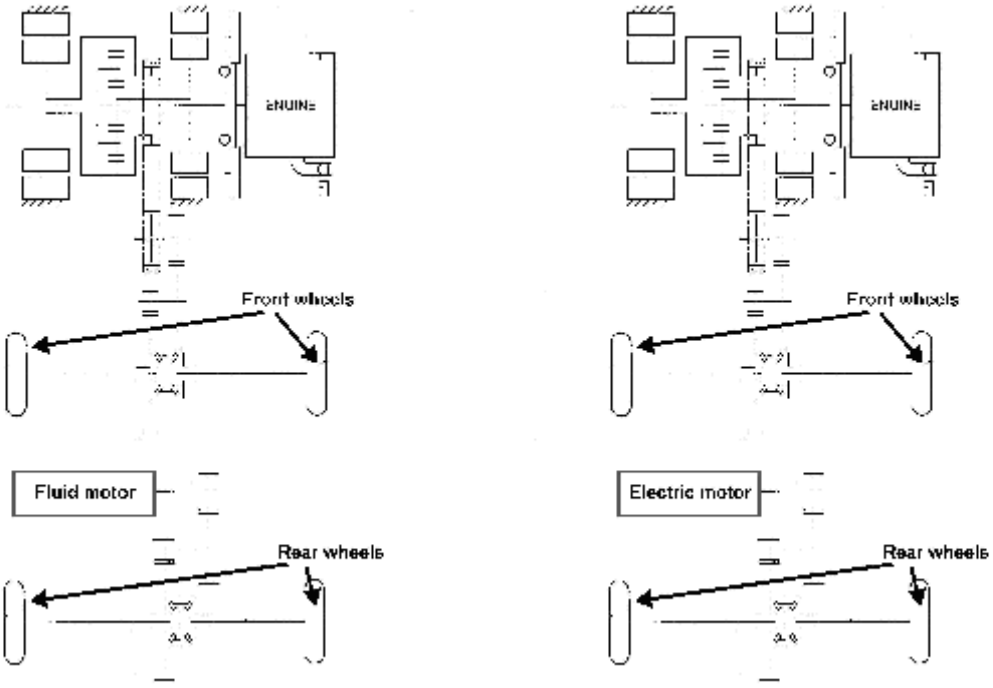

References

Informative references

Attention is drawn to the following places, which may be of interest for search:

Prime movers comprising combustion engines and mechanical or fluid energy storing means	B60K 6/08
Hybrid vehicles comprising electric and combustion engines	B60K 6/20
Hybrid vehicles driving a plurality of drive axles, e.g. with four wheel drive	B60K 6/52
Conjoin control including the control of driveline clutches	B60W 10/02
Conjoin control including the control of propulsion units	B60W 10/04
Conjoin control for hybrid vehicle characterized by a method for conjointly controlling different sub units	B60W 20/00

B60K 17/358

{all driven wheels being steerable}

Definition statement

This place covers:

Illustrative example of subject matter classified in this group.

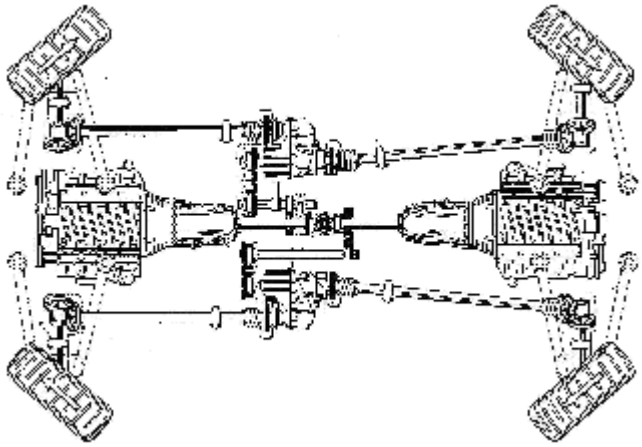

References

Informative references

Attention is drawn to the following places, which may be of interest for search:

Steering for trailer for centrally pivoted axles	B62D 13/00
Vehicles with more than four wheels	B62D 61/10

B60K 17/36

for driving tandem wheels

Definition statement

This place covers:

Illustrative example of subject matter classified in this group.

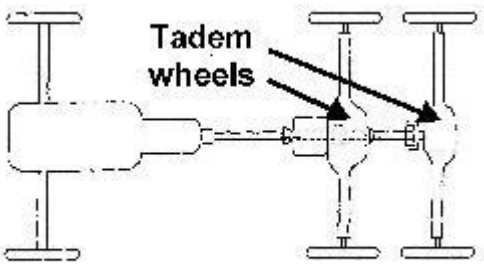

References

Informative references

Attention is drawn to the following places, which may be of interest for search:

Tractors comprising traction increasing arrangements	B62D 49/0621
Vehicles with more than four wheels	B62D 61/10

B60K 20/00

Arrangement or mounting of change-speed gearing control devices in vehicles (movable cabs having special adaptations of vehicle control devices B62D 33/06; such control devices per se F16H)

Definition statement

This place covers:

The arrangement in the vehicle of the change speed gearing control devices. The change speed control device per see is not classified here (but in F16H 59/02).

References

Limiting references

This place does not cover:

Selector apparatus per se	F16H 59/02

Informative references

Attention is drawn to the following places, which may be of interest for search:

Control functions within change-speed-gearin	F16H 61/00
Controlling members for hand actuation per se, e.g. knobs, handles.	G05G 1/04, G05G 1/08

B60K 20/02

of initiating means (control mechanisms in general G05G)

Definition statement

This place covers:

Only the arrangement or mounting in the vehicle. The change speed gearing control devices per se are classified in F16H 59/00.

References

Limiting references

This place does not cover:

Control inputs to change speed-, or reversings- gearings	F16H 59/00
Selector apparatus	F16H 59/02
Selector apparatus for automatic transmissions (tiptronic)	F16H 59/0204

Selector apparatus with means for suppression of vibrations or reduction of noise	F16H 59/0208
Constructional features of the selector lever, e.g. grip parts, mounting or manufacturing	F16H 59/0278
Ratio selector apparatus	F16H 59/04
Consisting of electrical switches or sensors	F16H 59/044

Informative references

Attention is drawn to the following places, which may be of interest for search:

Adaptation for additional use of the arm-rests of vehicle seats	B60N 2/468
Adaptation of the arm-rests of vehicle seats for electrical control, e.g. by using switches	B60N 2/4693
Control mechanism in general	G05G

B60K 20/14

{fluid}

References

Informative references

Attention is drawn to the following places, which may be of interest for search:

Generation or transmission movements for final actuating mechanism, the movement being made hydraulically	F16H 61/30

Special rules of classification

The subgroup is abolished. Now F16H 59/045 is used instead.

B60K 23/00

Arrangement or mounting of control devices for vehicle transmissions, or parts thereof, not otherwise provided for (movable cabs having special adaptations of vehicle control devices B62D 33/06; such control devices per se F16D, F16H)

Definition statement

This place covers:

- Driver input members for controlling the main clutch comprising arrangements and mountings of pedals or paddles, clutch actuator transmission means of mechanical, electrical or hydraulic type and mounting of final actuators in the vehicle
- Arrangements and mountings of automated clutch actuators using e.g. mechanical, electromechanical or hydraulic means
- Driver input members for controlling differential gearings comprising arrangements and mountings of levers, pedals or switches to lock a differential or to modify torque or speed distribution
- Manual or automatic actuating means for locking or opening a freewheel device
- Manual or automatic actuating means for switching from two to four wheel drive
- Automatic controllers for varying the torque distribution between axles, e.g. between the front and the rear wheels

Relationships with other classification places

B60K 23/00 concerns the mountings or arrangements of control units related to a particular sub-unit not otherwise provided for in B60K.

The arrangements and mounting of input devices for change speed gearing are classified in B60K 20/00.

The arrangements and mounting of input devices for propulsion units are classified in B60K 26/00 .

Vehicle drive control systems in general that are used for conjoint control and not related to a particular sub-unit are classified in B60W 30/00.

Arrangement or mounting of gearings for driving both front and rear wheels B60K 17/34

References

Limiting references

This place does not cover:

Control systems for conjoint control of vehicle sub-units of different type or different function comprising clutch units	B60W 10/02
Propulsion control with common controlling member for different functions, e.g. conjoint engine and clutch control member	B60W 30/18181
Movable cabs having special adaptations for vehicle control devices	B62D 33/073

Informative references

Attention is drawn to the following places, which may be of interest for search:

Arrangements and mounting of clutches in vehicles	B60K 17/02
Arrangements and mounting of differentials in vehicles	B60K 17/16
Arrangements and mounting of freewheels in vehicles	B60K 17/26
Fluid actuated clutches	F16D 25/00
Freewheel clutches in general	F16D 41/00
Control devices for clutches per se	F16D 48/00
Control devices for change speed gearings per se	F16H 61/00
Control of hydrostatic transmissions	F16H 61/40
Controlling members actuated by hand in general	G05G 1/04, G05G 1/08
Controlling members actuated by foot in general	G05G 1/30

Special rules of classification

Use of the Indexing Code scheme is mandatory. When classifying in group B60K 23/00 classification must also be made in groups B60K 23/00 – B60K 2023/0841 for special features of clutch control, in B60Y 2400/00 for special features in general and in B60Y 2300/00 in order to identify the purpose and in B60W 10/00 for controlled sub-units and in B60W 2510/00 - B60W 2560/06 for controller input parameters and B60W 2710/00 - B60W 2720/406 for output target values.

B60K 25/00

Auxiliary drives (B60K 16/00 takes precedence; arrangements of tyre-inflating pumps mounted on vehicles B60C 23/10; driving tyre-inflating pumps B60C; driving engine auxiliaries F02B)

Definition statement

This place covers:

Drives for auxiliaries, including input power source, transmission and auxiliary output

The driving power source is determinant for the subgroup and is either:

- directly from an engine shaft: B60K 25/02
- from static or dynamic pressure or vacuum, developed by the engine: B60K 25/04
- from a transmission power take-off, PTO shaft: B60K 25/06
- from a ground wheel, e.g. engaging the wheel tread or rim: B60K 25/08
- directly from oscillating movements due to vehicle running motion: B60K 25/10

The drives are of any transmission type: belts, chains, gear trains, hydrostatic transmissions or electric transmissions using alternators/motors connected to a battery:

- Auxiliary are all kind of vehicle auxiliaries as:
- Pumps for steering servos
- Pumps for any hydraulic actuators for onboard implements
- Compressors for air conditioning
- Vacuum pumps for braking assistance
- Alternators or generators

Relationships with other classification places

B60K 25/00 concerns the mountings of auxiliary drives; the control of the auxiliary units is classified in the subclasses related to the particular auxiliary unit, as for example air conditioning.

The generator/motors drivingly connected to the engine crankshaft and driving also the vehicle are classified in subgroup B60K 6/485 for electric motor assisted hybrid vehicles.

References

Limiting references

This place does not cover:

Auxiliaries driven by force of nature, e.g. wind, solar panels	B60K 16/00
Drives for power-take-off, e.g. PTO shafts	B60K 17/28
Arrangements for driving tyre-inflating pumps mounted on vehicles	B60C 23/10
Engine accessories drives, e.g. inlet air compressors, camshafts, cooling fans, water pumps or engine oil pumps	**F02D67/00**
Electric motors or motor-generators used for starting the combustion engine	F02N 11/04

Informative references

Attention is drawn to the following places, which may be of interest for search:

Driving arrangements for vehicle air-conditioning systems	B60H 1/00421

Arrangements of pumps or compressors for control devices of brake systems	B60T 17/02
Pumps for power assisted steering	B62D 5/063

Special rules of classification

When classifying in group B60K 25/00 classification can also be made in codes for additional information:

- in B60K 25/00 – B60K 25/10 for additional information,
- in B60Y 2400/00 for special features in general,
- in B60Y 2200/00 for the vehicle types
- in B60Y 2300/00 in order to identify the purpose
- in B60W 10/00 for the type of controlled particular sub-unit, and further
- in B60W 2510/00 - B60W 2560/06 for controller input parameters and in B60W 2710/00 - B60W 2720/406 for output target values.

B60K 26/00

Arrangements or mounting of propulsion unit control devices in vehicles

Definition statement

This place covers:

- Driver input members for controlling the propulsion unit, prime mowers comprising arrangements and mountings of accelerator pedals or paddles,
- Throttle or fuel injection actuator transmission means of mechanical, electrical or hydraulic type and mounting of control input devices in the vehicle
- Arrangements and mountings of automatised actuators using actuating means e.g. electromechanical or hydraulic, secondary throttles and drive by wire engine controls
- Driver input members for controlling electric drive motors in electric vehicles
- Haptic driver feedback in pedal or increasing pedal force in case of dangerous driving conditions
- Electrical transmission means between accelerator pedals and propulsion units

Relationships with other classification places

B60K 26/00 concerns the mountings of control units related to propulsion units of vehicles.

The operator initiation means for internal combustion engines control in general are classified in F02D 11/00.

The arrangements and mounting of clutch control input devices, e.g. arrangement or mounting of pedals for clutches are classified in B60K 23/00.

Vehicle drive control systems in general that are used for conjoint control and not related to a particular sub-unit are classified in B60W 30/00.

References

Limiting references

This place does not cover:

Human control setting devices for electrically propelled vehicles	B60L 15/00
Control systems for hybrid vehicles	B60W 20/00
Movable cabs having special adaptations of vehicle control devices	B62D 33/073

Electric control of engine combustible supply	F02D 41/00
Starting and stopping engine by driver	F02N 11/0822

Informative references

Attention is drawn to the following places, which may be of interest for search:

Propulsion control with common controlling member for different functions, e.g. common control member for engine and brake control	B60W 30/18181
Control devices for engines by operator per se	F02D 11/00
Accelerator pedal transfer functions to engine controllers	F02D 11/105
Control of tactile feedback to the driver	F02N 11/0822
Control of hydrostatic transmissions, inching pedals	F16H 59/06, F16H 61/40
Controlling members actuated by hand in general	G05G 1/04, G05G 1/08
Controlling members by foot in general	G05G 1/30

Special rules of classification

Use of the Indexing Code scheme is mandatory. When classifying in group B60K 26/00 classification must also be made in groups B60K 26/00 for additional features of accelerator, in B60Y 2400/00 for special features in general, in B60Y 2300/00 in order to identify the purpose and in B60W 10/00 for the multiple controlled sub-units and in B60W 2510/00 -B60W 2560/06 for controller input parameters and B60W 2710/00 - B60W 2720/406 for the output target values.

B60K 28/00

Safety devices for propulsion-unit control, specially adapted for, or arranged in, vehicles, e.g. preventing fuel supply or ignition in the event of potentially dangerous conditions (for electrically-propelled vehicles B60L 3/00; road vehicle drive control systems for purposes not related to the control of a particular sub-units B60W 30/00)

Definition statement

This place covers:

The arrangements and mountings of safety systems responsive to:

- conditions relating to the driver, as presence or incapacity
- conditions relating to the vehicle, as doors or cargo
- skidding of the wheels

for inhibiting the vehicle driving connection by acting on a single particular sub-unit:

- cutting ignition or fuel supply
- switching off the battery
- reducing engine torque
- opening a clutch or other driving connection
- sending a signal to the exterior

Relationships with other classification places

B60K 28/00 is the place where the layout and arrangement of safety systems will be classified. The conjoint control of these systems will be classified in subclass B60W 10/00 for the type of the controlled unit with additional classification symbol in B60W 30/00 for the purpose. Combustion engine

features per se are classified in the relevant subclasses F02B, F02D, F02N. Transmission or clutch features per se are classified in the relevant subclasses F16H or F16D.

References

Limiting references

This place does not cover:

Devices on electrically-propelled vehicles for safety purposes	B60L 3/00
Control of airbags or occupant passive safety systems	B60R 21/01
Propulsion control with conjoint control of two or more sub-units for wheel slip	B60W 30/18172
Alarms for ensuring the safety of persons, anti-dozing alarms	G08B 21/00

Informative references

Attention is drawn to the following places, which may be of interest for search:

Brake control systems for vehicle drive stability control of vehicle	B60T 8/1755
Arrangements responsive to a speed conditions for adjusting wheel braking force	B60T 8/32
Driving stability by controlling multiple propulsion units	B60W 30/02
Active safety systems predicting or avoiding probable or impending collision by taking automatic action	B60W 30/08
Means for informing the driver, warning the driver or prompting a driver intervention	B60W 50/08
Limiting control by the driver depending on vehicle state, e.g. interlocking means for the control input for preventing unsafe operation	B60W 50/12
Preventing wheel slippage by reducing power in rail vehicles	B61C 15/00

Special rules of classification

Multi-aspect classification practice is used in this group. Whenever one or more specific aspects of the system are concerned, classification should be given for each of the different aspects.

Use of the Indexing Code scheme is mandatory. When classifying in group B60K 28/00 classification must also be made in groups B60K 28/00 – B60K 2028/003 for additional features of safety control, in B60Y 2400/00 for special features in general, in B60Y 2300/00 in order to identify the purpose and in B60W 10/00 for multiple particular sub-units and in B60W 2510/00 - B60W 2560/06 for controller input parameters and in B60W 2710/00 - B60W 2720/406 for the output target values.

B60K 31/00

Vehicle fittings, acting on a single sub-unit only, for automatically controlling, i.e. preventing speed from exceeding an arbitrarily established velocity or maintaining speed at a particular velocity, as selected by the vehicle operator (fittings acting on two or more sub-units B60W 30/14; propulsion unit control in general, see the relevant classes or subclasses, e.g. F02D; speedometers G01P; systems or devices for controlling speed in general G05D 13/00; {in traffic anti-collision system for road vehicles G08G 1/16})

Definition statement

This place covers:

- Control systems for cruise control or speed limiting control of any particular single vehicle sub-unit.
- Control systems of a single vehicle sub-unit for Adaptive Cruise Control (ACC) or for controlling distance between vehicles, in particular distance from host vehicle to the preceding vehicle.
- Driver inputs to the cruise control systems comprising switches or levers for setting a target or reference vehicle speed
- Control methods for controlling a single sub-unit or algorithms therefore for:
- - selecting a target vehicle,
- - detecting a distance and/or a speed of a target vehicle and
- - comparing to a reference distance,
- - setting or adapting the reference distance according to driving conditions,
- - releasing or inhibiting the speed control for example in case of brake pedal actuation and
- - resuming the speed control
- Servomechanisms of electric, hydraulic or mechanical type to regulate the vehicle speed
- Target outputs (analogue or digital) to the controller of a particular sub-unit to regulate a vehicle speed
- Interactions with the driver, displaying target speeds, warning in case of excessive speeds

Relationships with other classification places

B60K 31/00 concerns the vehicle speed controls related to a particular sub-unit, as for example engine or electrical drive motor or brakes, if the invention concerns a cruise control by acting on two or more sub-units as for example engine and brakes than it is classified in B60W 30/14 which is the application-oriented place covering vehicle drive control systems in general that are not related to a particular sub-unit or used for conjoint control

Detecting means in general (e.g. ultrasonic radars G01S 7/00, TV cameras H04N, rear view cameras B60R 1/00, image processing, or measuring means) are covered by the classes G01, G06 or H04 and their appropriate subclasses.

Human-computer interfaces, e.g. Keyboards G06F 3/00

Displays in general are classified in B60K 35/00.

Driver warnings in general are classified in B60W 50/08.

References

Limiting references

This place does not cover:

Control systems for conjoint control of vehicle sub-units of different type or different function.	B60W 10/00

Cruise control systems using conjoint control of two or more vehicle sub-units of different type or different function	B60W 30/14
Estimations or calculations of driving parameters for road vehicle drive systems that are used for purposes of cruise control.	B60W 40/00

Informative references

Attention is drawn to the following places, which may be of interest for search:

Controlling combustion engines, such controlling being peculiar to the devices driven thereby, the devices being other than parts or accessories essential to engine operation, e.g. controlling of engines by signals external thereto	F02D 29/00
Electrical control of engine fuel injection	F02D 41/00
Control of hydrostatic transmissions for achieving a target output speed	F16H 61/47
Measuring linear, angular speeds, acceleration or deceleration	G01P
Systems for controlling position, course, altitude, or attitude of land, water, air, or space vehicles	G05D 1/00
Systems or devices for controlling speed in general, i.e. prime mower speed control	G05D 13/00
Traffic control systems i.e. systems transmitting information to a plurality of vehicles simultaneously in order to co-ordinate the flow of vehicles or systems controlling platoons of vehicles	G08G 1/00
Anti-collision systems	G08G 1/16

Special rules of classification

In subgroups B60K 31/02 up to B60K 31/18 the last place priority rule is applied, i.e. at each hierarchical level, classification is made in the last appropriate place.

B60K 31/00 is a multi-aspect classification! Classifications have to be given for all features of the claims and the features of particular interest of the embodiments.

Use of the Indexing Code scheme is mandatory. When classifying in group B60K 31/00 classification must also be made in groups B60K 31/00 – **L60K31/30** for additional features of cruise control, in B60Y 2400/00 for special features in general, in B60Y 2300/00 in order to identify the purpose and in B60W 10/00 for the controlled sub-units and in B60W 2510/00 - B60W 2560/06 for controller input parameters and in B60W 2710/00 - B60W 2720/406 for the output target values.

B60K 35/00

Arrangement of adaptations of instruments (arrangements on dashboard B60K 37/02)

Definition statement

This place covers:

Arrangements of instruments for and aspects of display of information in a vehicle. The main group is in particular directed to all instruments located in the dashboard (and surrounding areas like windscreen or centre console) indicating information to the driver or passengers.

This main group covers all instruments that are in a vehicle dashboard if they are defined by particular aspects in their relation to the vehicle dashboard (e.g. the way they are mounted) or at least to control or indicate vehicle functions.

Relationships with other classification places

B60K 35/00 is the general home for documents comprising vehicle related aspects of indication devices.

B60K 37/00 is directed to adaptation of instruments in vehicles in general, to combined instruments and to vehicle related aspects of input devices in dashboards.

Whilst B60K 35/00 is directed to the adaptation of instruments in a dashboard, B62D 25/14 is related to the (internal) structure of the dashboard itself and to dashboards as superstructure sub units (e.g. dashboard structure, fixation).

Whilst B60K 35/00 is directed to the adaptation of vehicle instruments to the dashboard, B60R 11/00 is directed to mounting of electronic devices to dashboard (see in particular B60R 2011/0005).

References

Limiting references

This place does not cover:

Instruments in airplanes	**B60D43/00**
Lighting for dashboard	B60Q 3/04
Adaptations on rotatable parts of the steering wheel for accommodation of switches	B62D 1/046
Dashboard as superstructure	B62D 25/14
Indicator lights, e.g. for mounting on control panels or dashboards	F21S 8/10
Navigation	G01C 21/00
Indicating measures values (analogue and digital)	G01D 7/00
Components of measuring arrangements	G01D 11/00
Components of indicators	G01D 13/00
Engine indicators	G01L
Battery indicators	G01R 31/3686
Head-up displays (HUD)	G02B 27/01
Taximeters	G07B 13/00
Toll collection	G07B 15/00
Registering or indicating the working of vehicles	G07C 5/00

Informative references

Attention is drawn to the following places, which may be of interest for search:

Monitoring tyres	B60C 23/00
Indicating over speed	B60K 31/00
Arrangements for holding articles - radio/television/telephone	B60R 11/02
Display devices for vehicle air conditioning	B60H 1/00985
Arrangements or adaptations of lighting devices for vehicle interior	B60Q 3/00

Measuring distance	G01C
Measuring speed or acceleration	G01P
Devices specially adapted for navigation in a road network	G01C 21/26
Measuring combinations of speed and distance	G01C 23/00
Input of data to computer	G06F 3/00
User interface programs, e.g. command shells, help systems, UIMS (interface arrangement	G06F 9/4443
Remote windowing systems, e.g. X-windows; or window cell phone displayed in vehicle display	G06F 9/4445
Traffic control systems for vehicles	G08G 1/00
Mobile visual advertising	G09F 21/00
Indicating arrangements for variable information in which the information is built-up on a support by selection or combination of individual elements	G09F 9/00
(radio) receivers to be used in vehicles	H04B 1/082
Digital radio	H04H 20/00
Details of television systems	H04N 5/00

Special rules of classification

In this group it is highly desired to add vertical Indexing Codes for all main aspects of the invention

- either the invention is characterized by that aspect or
- the aspect can be regarded as non-standard solution in that context (e.g. the vehicle context: adapted to vehicle requirements, controlling vehicle functions, displaying vehicle relevant information, device specific to a vehicle type ...).

Vertical Indexing Codes to be used are B60K 2350/00 for aspects of input/output devices or features thereof, optical features of instruments, hardware adaptations, control system arrangements, structural details, mounting and perception or visibility of information. Further B60Y 2300/00 for purposes or special features of vehicle drive control systems, B60Y 2400/30 for sensors, B60Y 2200/00 for the vehicle type.

This main group does not cover the structure of instruments if no vehicle related aspect is present (e.g. the mere mechanical or electronic structure of an instrument).

Glossary of terms

In this place, the following terms or expressions are used with the meaning indicated:

HUD	head-up display
LED	light emitting diode
OLED	organic light emitting diode
LCD	Liquid crystal display
TFT	thin film transistor
VFD	vacuum fluorescent display

Synonyms and Keywords

In patent documents, the following words/expressions are often used as synonyms:

- "dashboard liner", "cladding" and "padding"

- "instrument cluster", "combined instrument" and "combi instrument"

B60K 37/00

Dashboards (as road-vehicle superstructure sub-unit B62D)

Definition statement

This place covers:

The adaptation of instruments in a vehicle dashboard. The main group is in particular directed to the mechanical mounting of instruments to the dashboard or the electrical integration of such instruments in the dashboard (e.g. connection to vehicle bus system). A dashboard related aspects must be present in all cases.

Relationships with other classification places

B60K 35/00 is the general home for documents comprising vehicle related aspects of indication devices.

B60K 37/00 is directed to adaptation of instruments in vehicles in general, to combined instruments and to vehicle related aspects of input devices in dashboards.

Whilst B60K 35/00 is directed to the adaptation of instruments in a dashboard, B62D 25/14 is related to the (internal) structure of the dashboard itself and to dashboards as superstructure sub units (e.g. dashboard structure, fixation).

Whilst B60K 35/00 is directed to the adaptation of vehicle instruments to the dashboard, B60R 11/00 is directed to mounting of electronic devices to dashboard (see in particular B60R 2011/0005).

References

Limiting references

This place does not cover:

Instruments in airplanes	**B60D43/00**
Lighting for dashboard	B60Q 3/04
Dashboard as superstructure	B62D 25/14
Navigation	G01C 21/00
Components of measuring arrangements	G01D 11/00
Head-up displays (HUD)	G02B 27/01
Taximeters	G07B 13/00
Toll collection	G07B 15/00

Informative references

Attention is drawn to the following places, which may be of interest for search:

Arrangements for holding articles - radio/television/telephone	B60R 11/02
Clips for joining vehicle mouldings or liners	B60R 13/0206
Arrangements or adaptations of lighting devices for vehicle interior	B60Q 3/00
Indicator lights, e.g. for mounting on control panels or dashboards	F21S 8/10
Input of data to computer	G06F 3/00
Connectors	H01R

Switches	H03K
Touch switches	H03K 17/96
(radio) receivers to be used in vehicles	H04B 1/082

Special rules of classification

In this main group it is highly desired to add vertical Indexing Codes for all main aspects of the invention

- either the invention is characterized by that aspect or
- the aspect can be regarded as non-standard solution in that context (e.g. the vehicle context: adapted to vehicle requirements, controlling vehicle functions, displaying vehicle relevant information, device specific to a vehicle type ...).

Vertical Indexing Codes to be used are B60K 2350/00 for aspects of input/output devices or features thereof, optical features of instruments, hardware adaptations, control system arrangements, structural details, mounting and perception or visibility of information, and **L60Y30/00** for aspects of problems, **L60Y500/30** for sensors, actuators, material and production aspects, B60Y 2300/00 for the vehicle type.

This main group does not cover the structure of instruments if no vehicle related aspect is present (e.g. the mere mechanical or electronic structure of an instrument).

Glossary of terms

In this place, the following terms or expressions are used with the meaning indicated:

HUD	head-up display
LED	light emitting diode
OLED	organic light emitting diode
LCD	Liquid crystal display
TFT	thin film transistor
VFD	vacuum fluorescent display

Synonyms and Keywords

In patent documents, the following words/expressions are often used as synonyms:

- "dashboard liner", "cladding" and "padding"
- "instrument cluster", "combined instrument" and "combi instrument"

B60K 37/02

Arrangement of instruments (devices for lighting dashboard B60Q)

Definition statement

This place covers:

The adaptation of more than one instrument in the dashboard (combined instruments) to be arranged in a vehicle dashboard. The main group is in particular directed to the mechanical or electronic integration of instruments to become a combined instrument (interrelation between instruments).

Relationships with other classification places

B60K 35/00 is the general home for documents comprising vehicle related aspects of indication devices.

B60K 37/00 is directed to adaptation of instruments in vehicles in general, to combined instruments and to vehicle related aspects of input devices in dashboards.

Whilst B60K 35/00 is directed to the adaptation of instruments in a dashboard, B62D 25/14 is related to the (internal) structure of the dashboard itself and to dashboards as superstructure sub units (e.g. dashboard structure, fixation).

Whilst B60K 35/00 is directed to the adaptation of vehicle instruments to the dashboard, B60R 11/00 is directed to mounting of electronic devices to dashboard (see in particular B60R 2011/0005).

References

Limiting references

This place does not cover:

Instruments in airplanes	**B60D43/00**
Lighting for dashboard	B60Q 3/04
Adaptations on rotatable parts of the steering wheel for accommodation of switches	B62D 1/046
Dashboard as superstructure	B62D 25/14
Indicator lights, e.g. for mounting on control panels or dashboards	F21S 8/10
Navigation	G01C 21/00
Indicating measures values (analogue and digital)	G01D 7/00
Components of measuring arrangements	G01D 11/00
Components of indicators	G01D 13/00
Engine indicators	G01L
Battery indicators	G01R 31/3686
Head-up displays (HUD)	G02B 27/01
Taximeters	G07B 13/00
Toll collection	G07B 15/00

Informative references

Attention is drawn to the following places, which may be of interest for search:

Measuring vehicle parameters	B60R 16/0232
Circuits relating to the driving or the functioning of the vehicle	B60R 16/0232
Display devices for vehicle air conditioning	B60H 1/00985
Measuring distance	G01C
Measuring speed or acceleration	G01P
Devices specially adapted for navigation in a road network	G01C 21/26
Measuring combinations of speed and distance	G01C 23/00
Touch screen	G06F 3/0488
User interface programs, e.g. command shells, help systems	G06F 9/4443
(radio) receivers to be used in vehicles	H04B 1/082
Digital radio	H04H 20/00
Details of television systems	H04N 5/00

Special rules of classification

In this main group it is highly desired to add vertical Indexing Codes for all main aspects of the invention

- either the invention is characterized by that aspect or
- the aspect can be regarded as non-standard solution in that context (e.g. the vehicle context: adapted to vehicle requirements, controlling vehicle functions, displaying vehicle relevant information, device specific to a vehicle type ...).

Vertical Indexing Codes to be used are B60K 2350/00 for aspects of input/output devices or features thereof, optical features of instruments, hardware adaptations, control system arrangements, structural details, mounting and perception or visibility of information.Further B60Y 2300/00 for purposes or special features of vehicle drive control systems , B60Y 2400/30 for sensors, and B60Y 2200/00 for the vehicle type.

This main group does not cover the structure of instruments if no vehicle related aspect is present (e.g. the mere mechanical or electronic structure of an instrument).

Glossary of terms

In this place, the following terms or expressions are used with the meaning indicated:

HUD	head-up display
LED	light emitting diode
OLED	organic light emitting diode
LCD	Liquid crystal display
TFT	thin film transistor
VFD	vacuum fluorescent display

Synonyms and Keywords

In patent documents, the following words/expressions are often used as synonyms:

- "dashboard liner", "cladding" and "padding"
- "instrument cluster", "combined instrument" and "combi instrument"

B60K 37/06

of control, e.g. control knobs

Definition statement

This place covers:

The adaptation of input devices for instruments in a vehicle dashboard. The subclass is in particular directed to how the input is generated mechanically or electronically, the input however must be employed to control a vehicle related function (e.g. air condition).

Relationships with other classification places

B60K 35/00 is the general home for documents comprising vehicle related aspects of indication devices.

B60K 37/00 is directed to adaptation of instruments in vehicles in general, to combined instruments and to vehicle related aspects of input devices in dashboards.

Whilst B60K 35/00 is directed to the adaptation of instruments in a dashboard, B62D 25/14 is related to the (internal) structure of the dashboard itself and to dashboards as superstructure sub units (e.g. dashboard structure, fixation).

Whilst B60K 35/00 is directed to the adaptation of vehicle instruments to the dashboard, B60R 11/00 is directed to mounting of electronic devices to dashboard (see in particular B60R 2011/0005).

References

Limiting references

This place does not cover:

Instruments in airplanes	**B60D43/00**
Lighting for dashboard	B60Q 3/04
Adaptations on rotatable parts of the steering wheel for accommodation of switches	B62D 1/046
Navigation	G01C 21/00
Components of measuring arrangements	G01D 11/00
Components of indicators	G01D 13/00
Taximeters	G07B 13/00
Toll collection	G07B 15/00
Registering or indicating the working of vehicles	G07C 5/00

Informative references

Attention is drawn to the following places, which may be of interest for search:

Voice control	B60R 16/037
Control levers on arm rests	B60N 2/4693
Arrangements or adaptations of lighting devices for vehicle interior	B60Q 3/00
Brake control systems	B60T
Input of data to computer	G06F 3/00
User interface programs, e.g. command shells, help systems, UIMS (interface arrangement	G06F 9/4443
Traffic control systems for vehicles	G08G 1/00
Connectors	H01R
Switches	H03K
(radio) receivers to be used in vehicles	H04B 1/082
Digital radio	H04H 20/00
Details of television systems	H04N 5/00

Special rules of classification

In this main group it is highly desired to add vertical Indexing Codes for all main aspects of the invention

- either the invention is characterized by that aspect or

- the aspect can be regarded as non-standard solution in that context (e.g. the vehicle context: adapted to vehicle requirements, controlling vehicle functions, displaying vehicle relevant information, device specific to a vehicle type ...).

Vertical Indexing Codes to be used are B60K 2350/00 for aspects of input/output devices or features thereof, optical features of instruments, hardware adaptations, control system arrangements, structural details, mounting and perception or visibility of information. . Further B60Y 2300/00 for purposes or special features of vehicle drive control systems , B60Y 2400/30 for sensors, **L60W400/40** for actuators, **L60W410/00** for constructional features of vehicle sub-units and B60Y 2200/00 for the vehicle type.

This main group does not cover the structure of instruments if no vehicle related aspect is present (e.g. the mere mechanical or electronic structure of an instrument).

B60K 41/00

{Conjoint control of drive units; Conjoint control of at least two sub-units thereof (arrangement of plural diverse prime-movers for mutual or common propulsion B60K 6/00)}

Special rules of classification

The subgroup is abolished. B60W is used instead.