B24C

ABRASIVE OR RELATED BLASTING WITH PARTICULATE MATERIAL

Definition statement

This place covers:

Abrasive or related blasting with particulate material, whereby a blast of any particles or pellets dispersed in air, gas, or liquid (or an equivalent jet of particles or pellets projected or energised by other means) is used for the treatment of surfaces or cutting of materials, the particles usually being of abrasive material.

Blasting with jets acting as abrasive jets, but not containing particulate material in the exceptional cases of deburring, removal of extended surface areas and jet milling of local recessions e.g. grooves.

Relationships with other classification places

- Abrasive machining

Subclass B24B of grinding and polishing complements the abrasive blasting with particulate material, which is covered by B24C.Polishing or abrading surfaces by means of tumbling apparatuses or other apparatuses in which the work or the abrasive material is loose, are covered by main group B24B 31/00.Abrading internal surfaces, e.g. of a tube or a flow channel, by operations in which a plastically deformable grinding compound is used as a loose abrasive material under the influence of pressure, known in the art as abrasive flow machining, extrude honing or hydro-erosive machining, is covered by group B24B 31/116 when the dynamic viscosity of the carrier medium is higher than that of conventional fuels such as diesel. When the dynamic viscosity of the carrier is less than or equal to that of conventional fuel (e.g. when water is used as a carrier), the machining is considered as particulate blasting of an internal surface, which is covered by B24C 3/325 and its subgroups.

- Spraying or atomising, nozzles

Spraying or atomising in general and nozzles in general are covered by subclass B05B.

Nozzles specially adapted for blasting surfaces with a jet of particulate material are covered by group B24C 5/04.

- Abrasive materials and polishing compositions

Abrasive particles, powders or compositions in general are covered by groups C09K 3/14 and C09G 1/00. Polishing compositions in general when they contain abrasives or grinding agents are covered by C09G 1/02. When used as materials for abrasive blasting, they are covered by B24C 11/00.

References

Limiting references

This place does not cover:

Dental tools or instruments acting like a sandblast machine	A61C 3/025
Energy dissipating devices for cutting jets with or without particles, known in the art as catcher tanks	B26F 3/008
Producing decorative effects by removing surface-material using streams of abrasive particles	B44C 1/221
Blasting semiconductor devices e.g. with a jet of particulate matter acting like sand blasting	H01L 21/3046

Informative references

Attention is drawn to the following places, which may be of interest for search:

Application of shock-waves	B01J 3/08
Processes employing sonic or ultrasonic vibrations	B01J 19/10
Nozzles in general, Spraying or atomising in general	B05B
Jet flame processing in general	B05B 7/205
Cleaning in general; prevention of fouling in general	B08B
Cleaning by the force of jets or sprays without particles	B08B 3/02
Sonic or ultrasonic cleaning	B08B 3/12
Shot-peening for deforming sheet metal, tubes or profiles	B21D 31/06
Machines or devices for scraping	B23D 79/02
Cavitation peening. Treating or finishing by hammering or applying repeated pressure	B23P 9/04
Peening when the peening media is guided on its path during the peening action	B24B 39/006
Perforating by means of a fluid jet without particles	B26F 1/26
Severing by means of a fluid jet without particles	B26F 3/004
Recycling of tires	B29B 17/02
Implements or apparatus for removing dry paint from surfaces, e.g. by scraping	B44D 3/16
Shot-peening as a metallurgical treatment of iron or steel	C21D 7/06
Shot-peening as a metallurgical treatment of non-ferrous material	C22F 1/00
Earth drilling by liquid or gas jets, with or without entrained pellets	E21B 7/18
Production of stencils for photo mask processing	G03F 7/12
Stripping of photosensitive material	G03F 7/42
Controlling; regulating, e.g. cutting control, pierce-through measurement	G05, G05B

B24C 1/00

Methods for use of abrasive blasting for producing particular effects; Use of auxiliary equipment in connection with such methods

Definition statement

This place covers:

Abrasive blasting methods for producing particular effects and also devices configured to perform these methods.

Example(s): US20080076328, EP0015470, WO20060097133.

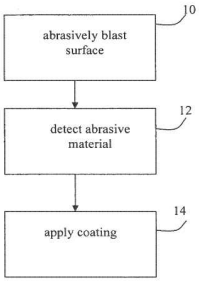

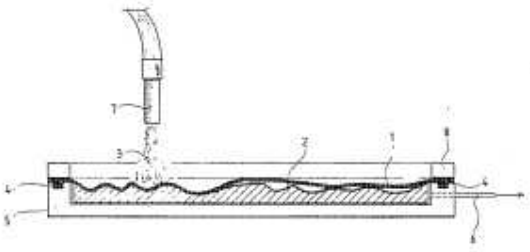

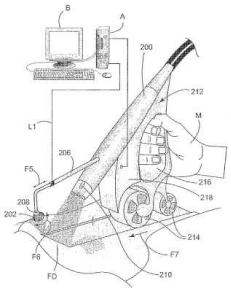

B24C 1/003

{using material which dissolves or changes phase after the treatment, e.g. ice, CO_2}

Definition statement

This place covers:

Example(s): US20100192655, US20060089090, DE1020040023246.

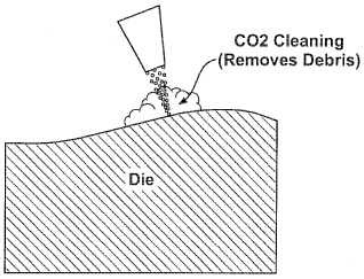

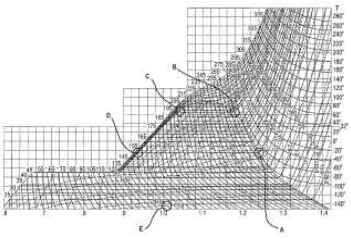

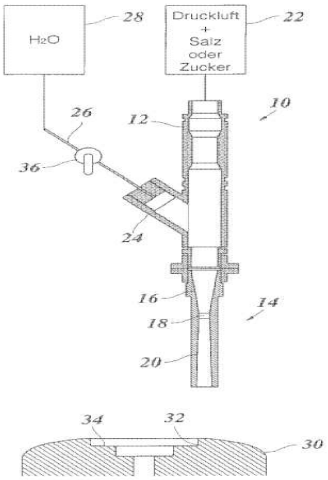

References

Informative references

Attention is drawn to the following places, which may be of interest for search:

Solidifying carbon dioxide	C01B 31/22
Production, working, storing or distributing of ice	F25C 1/00

B24C 1/02

for sharpening or cleaning cutting tools, e.g. files

Definition statement

This place covers:

Example(s): WO9735686, EP1792691.

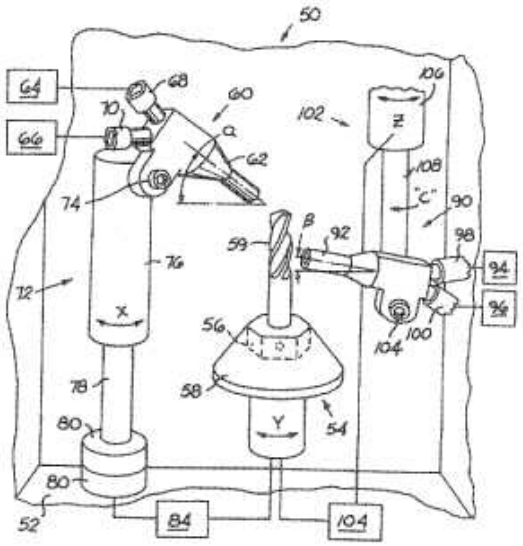

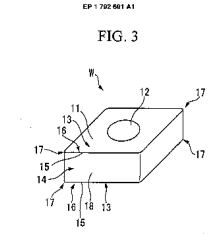

FIG. 3

FIG. 4

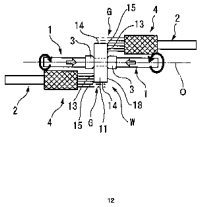

B24C 1/04

for treating only selected parts of a surface, e.g. for carving stone or glass

Definition statement

This place covers:

Example(s): US 20100269593, US20070259606.

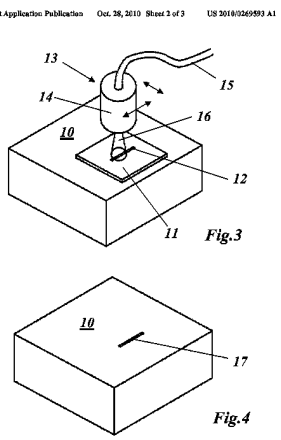

Fig.3

Fig.4

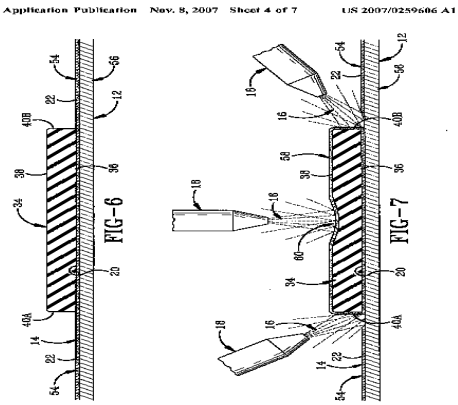

FIG-6

FIG-7

B24C 1/045

{for cutting (energy dissipating devices therefor B26F 3/008)}

Definition statement

This place covers:

Example(s): GB2400893, US20030065424.

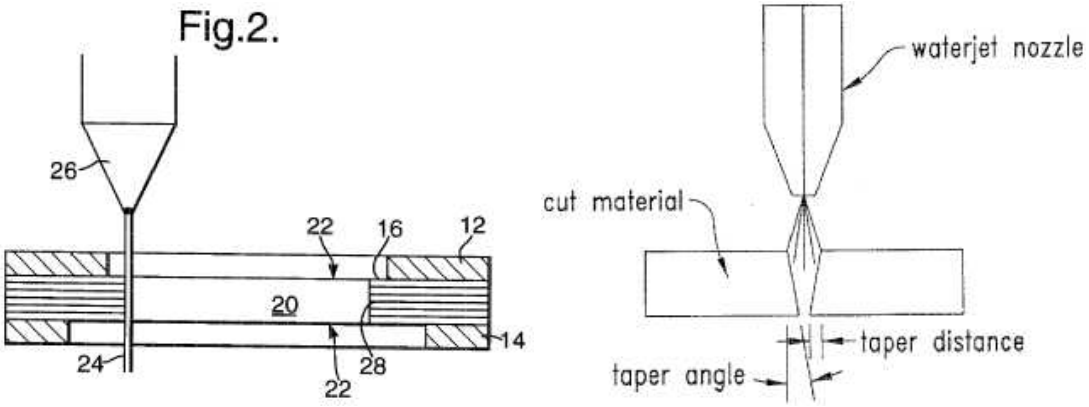

References

Limiting references

This place does not cover:

Energy dissipating devices for cutting jets with or without particles, known in the art as catcher tanks	B26F 3/008

Informative references

Attention is drawn to the following places, which may be of interest for search:

Controlling; regulating, e.g. cutting control, pierce-through measurement	G05, G05B

B24C 1/06

for producing matt surfaces, e.g. on plastic materials, on glass

Definition statement

This place covers:

Example(s): EP1803532, US7131303, JP20040230549, EP0811582.

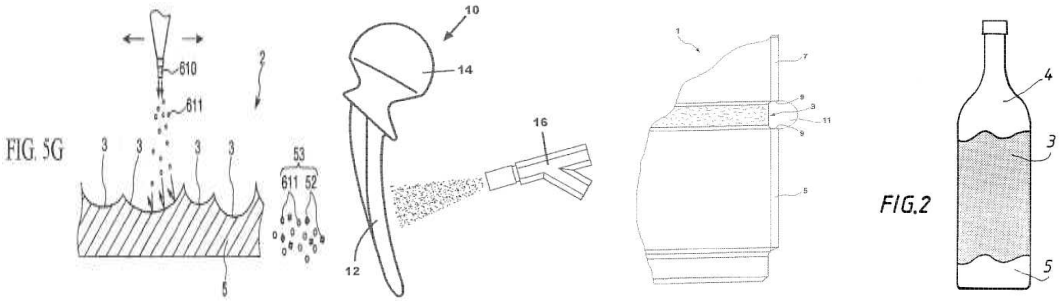

B24C 1/08

for polishing surfaces, e.g. {smoothing a surface} by making use of liquid-borne abrasives

Definition statement

This place covers:

Example(s): EP2132001.

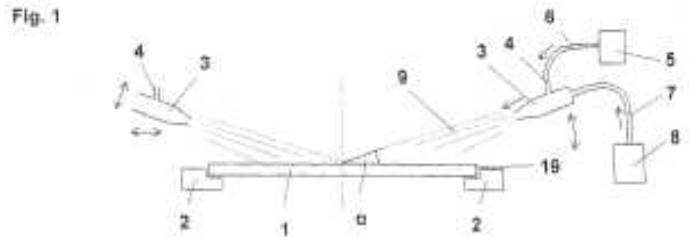

B24C 1/083

{Deburring}

Definition statement

This place covers:

Example(s): US20040168494, EP1839801, WO20080044613.

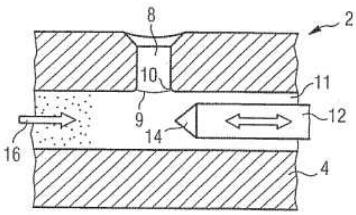

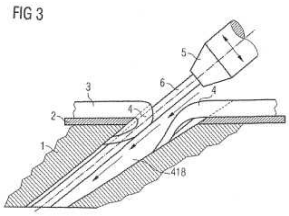

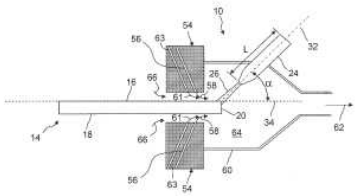

B24C 1/086

{Descaling; Removing coating films}

Definition statement

This place covers:

Example(s): US20080108281, US20030219621, US20030116649.

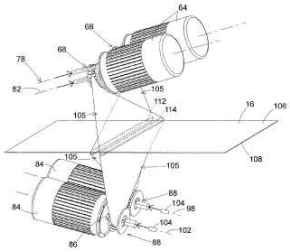

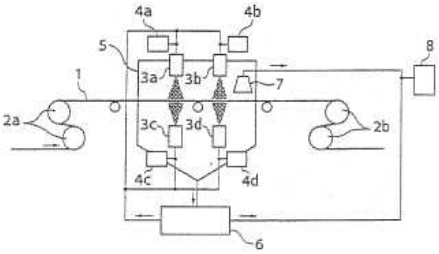

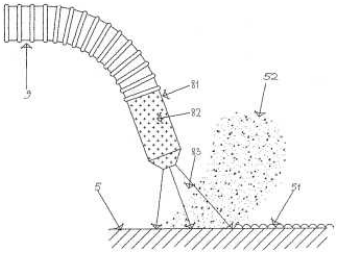

References

Informative references

Attention is drawn to the following places, which may be of interest for search:

Cleaning by the force of jets or sprays without particles	B08B 3/02

B24C 1/10

for compacting surfaces, e.g. shot-peening (for deforming sheet metal, tubes or profiles B21D 31/06; as a metallurgical treatment C21D 7/00, C22F 1/00)

Definition statement

This place covers:

Example(s): FR2689431, EP0359277, US4258084, DE1020080011243.

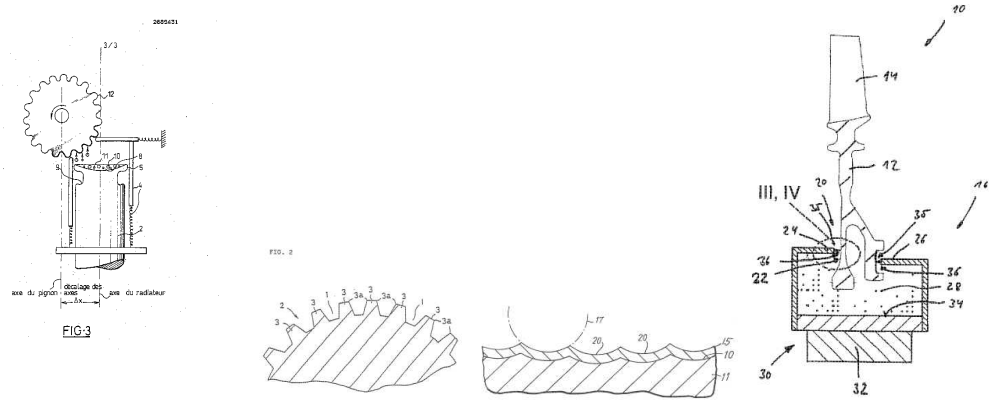

References

Limiting references

This place does not cover:

Peening when the peening media is guided on its path during the peening action	B24B 39/006

Application-oriented references

Examples of places where the subject matter of this place is covered when specially adapted, used for a particular purpose, or incorporated in a larger system:

Shot-peening for deforming sheet metal, tubes or profiles	B21D 31/06
Shot-peening as a metallurgical treatment of iron or steel	C21D 7/06
Shot-peening as a metallurgical treatment of non-ferrous material	C22F 1/00

Informative references

Attention is drawn to the following places, which may be of interest for search:

Application of shock-waves	B01J 3/08
Cavitation peening. Treating or finishing by hammering or applying repeated pressure	B23P 9/04

B24C 3/00

Abrasive blasting machines or devices; Plants

Definition statement

This place covers:

Abrasive blasting machines and plants.

References

Limiting references

This place does not cover:

Aspects of machines related to the processes of group B24C 1/00 and its subgroups	B24C 1/00
Aspects of machines related to the processes of dry ice blasting and blasting with salt dissolving during or after blasting	B24C 1/003
Aspects of machines related to the process of shot peening	B24C 1/10

B24C 3/02

characterised by the arrangement of the component assemblies with respect to each other (B24C 3/08, B24C 3/18 take precedence)

Definition statement

This place covers:

Also machines with intersecting and swinging or swivelling nozzles.

Example(s): US6604986 (intersecting nozzles), US20040162009, DE1020070006673 (swinging nozzles).

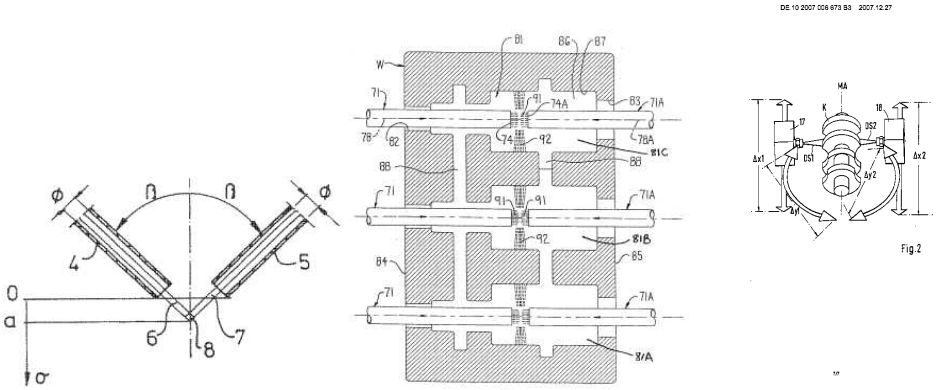

B24C 3/04

stationary

Definition statement

This place covers:

also devices with rotating nozzles.

Example(s): DE1020070033788 (robot), WO20100119201 (rotating nozzles), WO9114539, US20060049285 (rotating nozzles), US20060135041 (gantry type), DE1020080027217

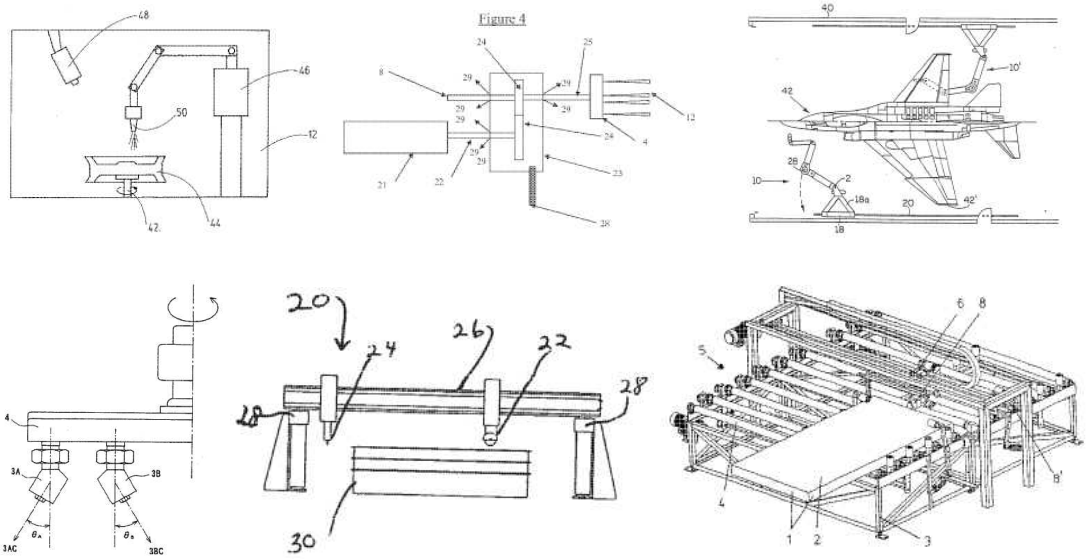

B24C 3/06

movable; portable

Definition statement

This place covers:

Example(s): US5191740, US5216849, WO9505922 (road barrier), US20080287039, WO20060097133 (handheld), US5181349 (handheld), EP1207235 (road vehicle), WO0048901, EP0795380 (corner), EP2038088 (portable), US5248436 (from helicopter or ship).

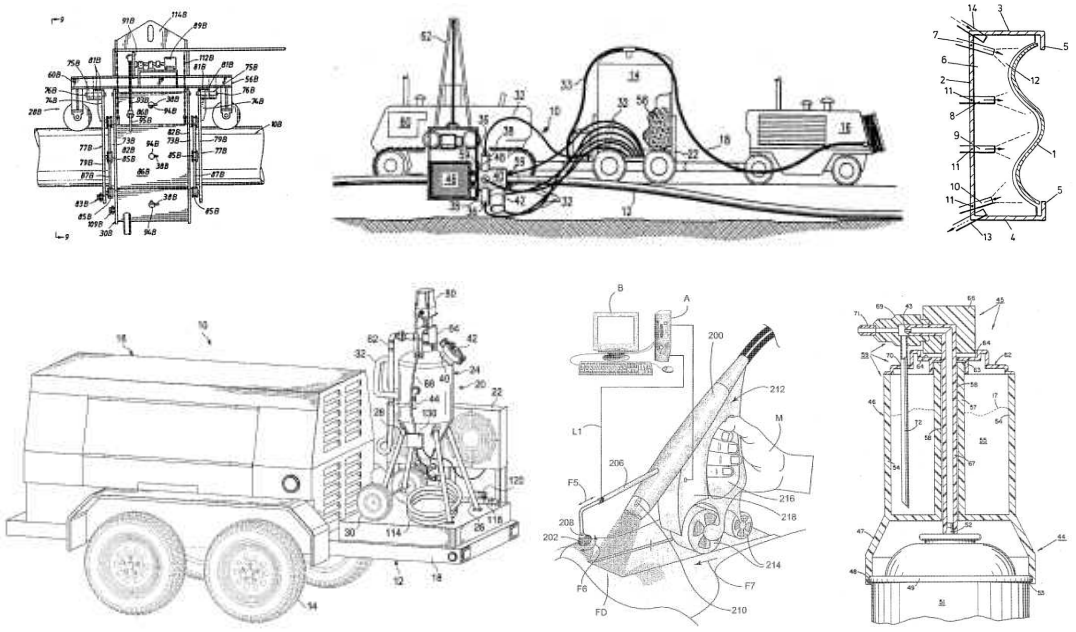

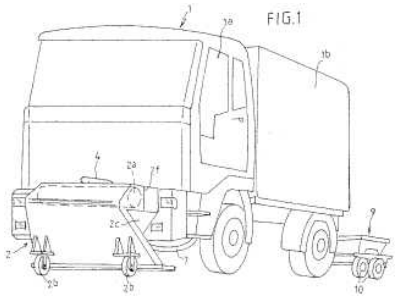

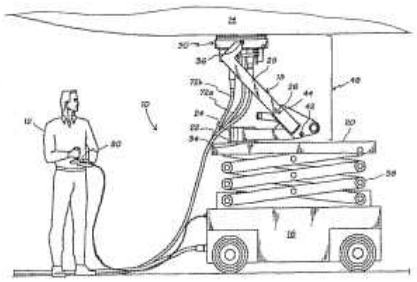

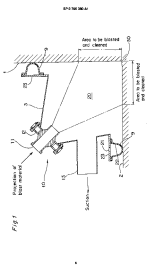

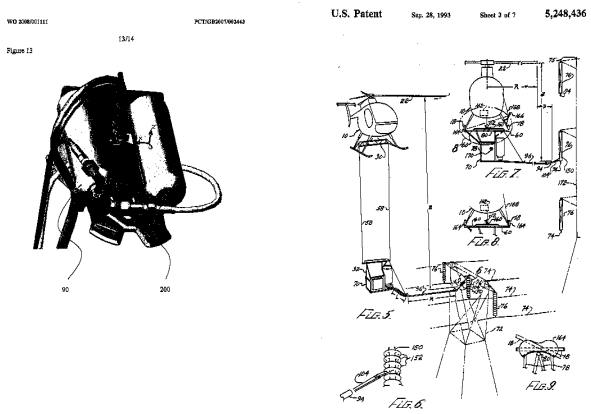

B24C 3/062

{for vertical surfaces}

Definition statement

This place covers:

also blasting of surfaces that are not strictly vertical.

Example(s): FR2891175 (ship hull, airplane hull).

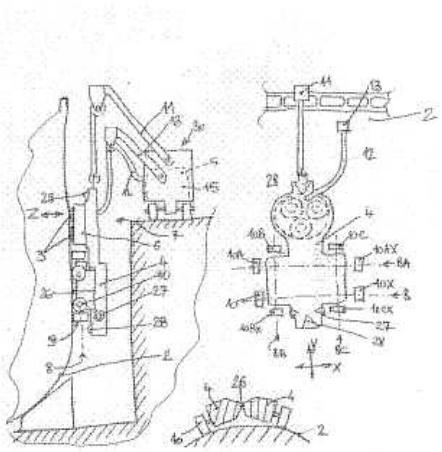

Special rules of classification

Blasting of surfaces that are not strictly vertical and containing devices with suction means are additionally classified in B24C 3/065.

B24C 3/067

{Self-contained units for floorings}

Definition statement

This place covers:

Devices with suction means and horizontal working plane for treating floorings.

Example(s): FR2564769.

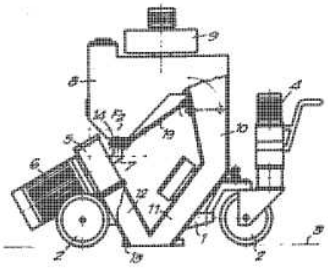

B24C 3/08

essentially adapted for abrasive blasting of travelling stock or travelling workpieces

Definition statement

This place covers:

Example(s): US5512005, US5417608

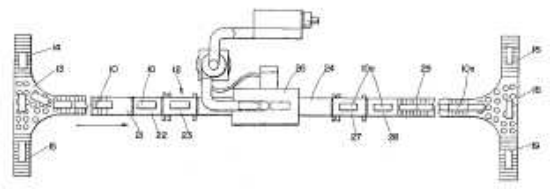

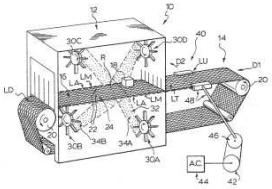

References

Limiting references

This place does not cover:

Machines or devices where the workpieces are transported or agitated by troughed belt conveyors	B24C 3/266

B24C 3/081

{for travelling bundles of wires}

Definition statement

This place covers:

Example(s): GB1149317.

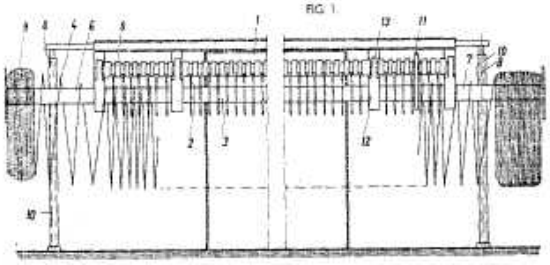

B24C 3/083

{Transfer or feeding devices; Accessories therefor}

Definition statement

This place covers:

Example(s): EP0227275, EP0100944, GB1080030.

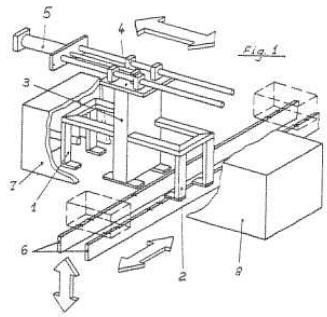

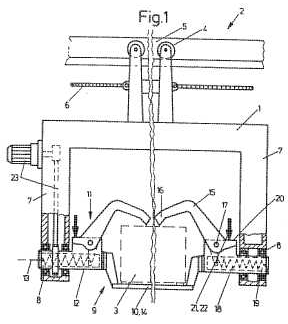

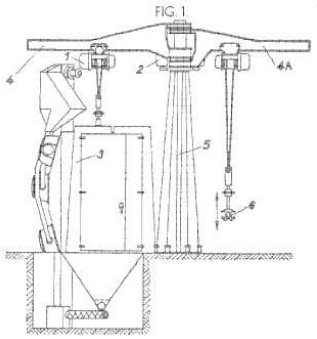

B24C 3/085

{the travelling workpieces being moved into different working positions during travelling}

Definition statement

This place covers:

Example(s): EP2178677, US20080258367, US20080209731.

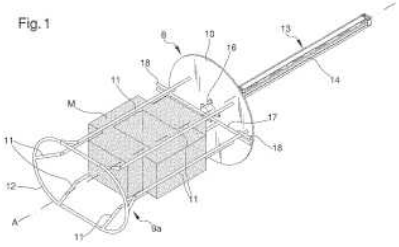

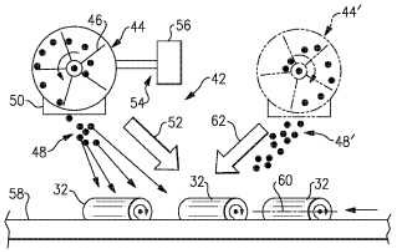

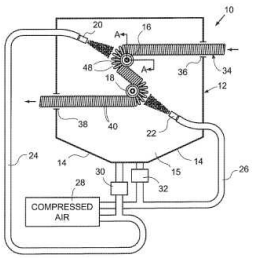

References

Limiting references

This place does not cover:

Machines or devices where the workpieces are transported or agitated by troughed belt conveyors	B24C 3/266

B24C 3/086

{whereby the workpieces are turned through a rotational arc of about 180 degrees}

Definition statement

This place covers:

Example(s): CH614656.

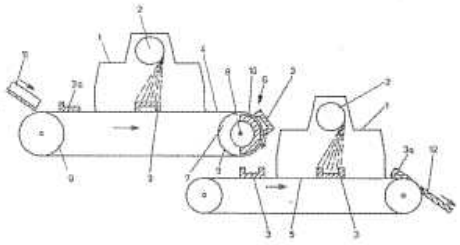

B24C 3/088

{using a vibratory transfer mechanism}

Definition statement

This place covers:

Example(s): DE4435333, DE1020080011663, US20030186626.

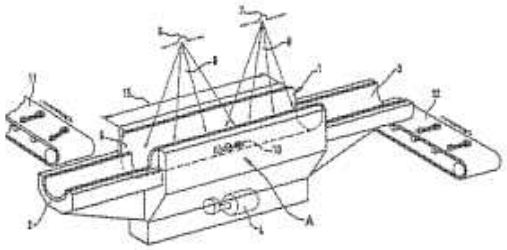

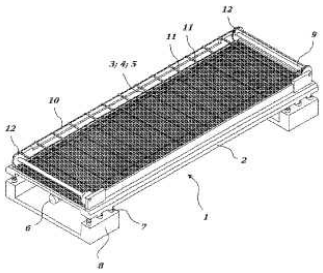

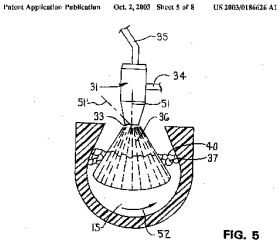

FIG. 5

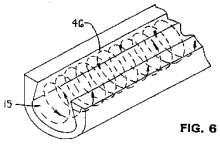

FIG. 6

B24C 3/10

for treating external surfaces

Definition statement

This place covers:

Example(s): US20050204528

References

Limiting references

This place does not cover:

Machines or devices where the workpieces are transported or agitated by troughed belt conveyors	B24C 3/266

B24C 3/12

Apparatus using nozzles

Definition statement

This place covers:

Example(s): US20050255795, US4251956, US20030219621.

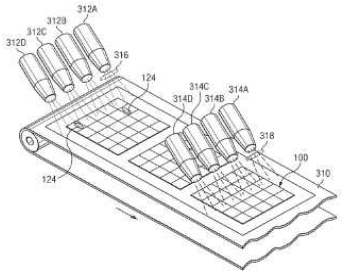

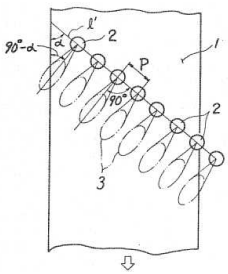

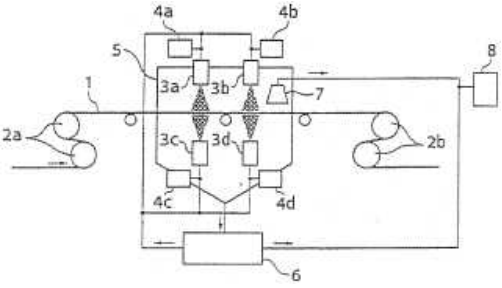

B24C 3/14

Apparatus using impellers

Definition statement

This place covers:

Example(s): US4566230

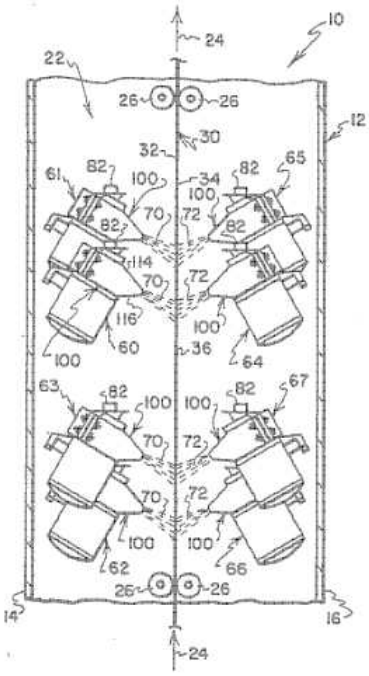

B24C 3/16

for treating internal surfaces

Definition statement

This place covers:

Example(s): US20080209731, DE4342593.

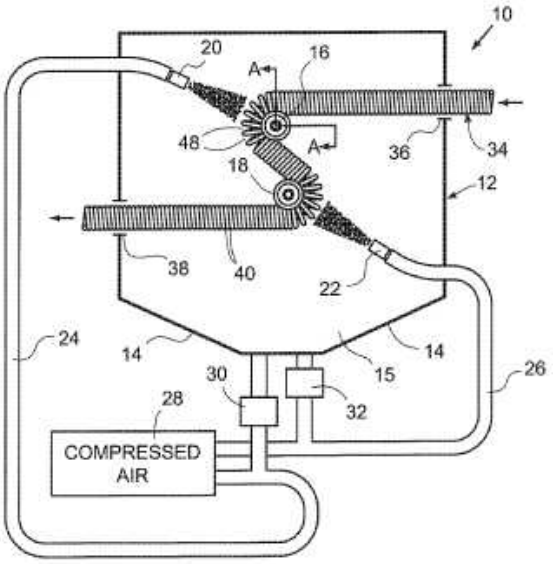

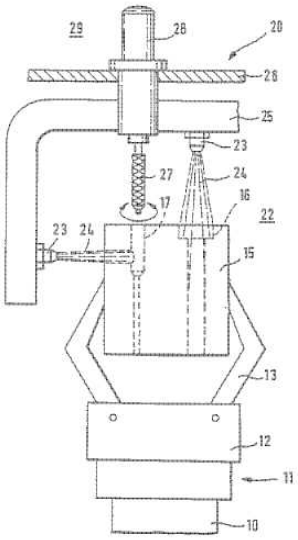

B24C 3/18

essentially provided with means for moving workpieces into different working positions (B24C 3/08 takes precedence)

Definition statement

This place covers:

Example(s): EP1045743, EP0523462, EP0248096.

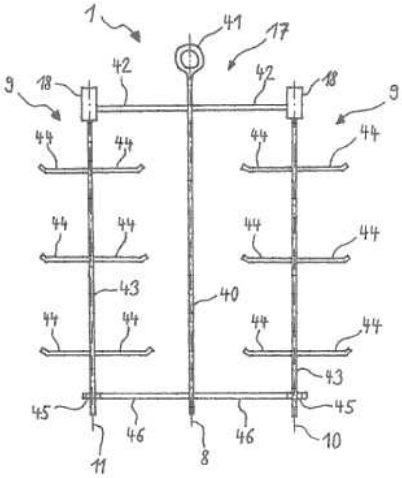

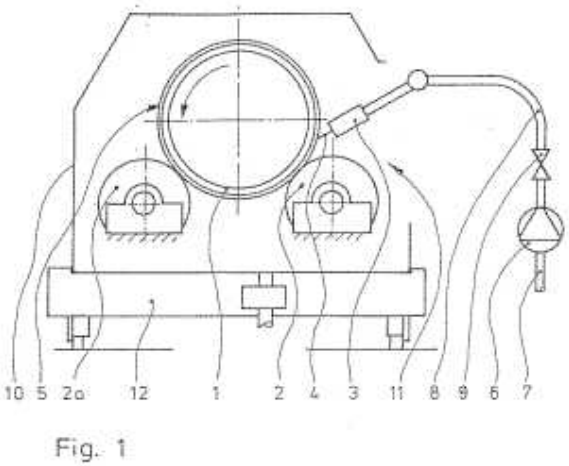

Fig. 1

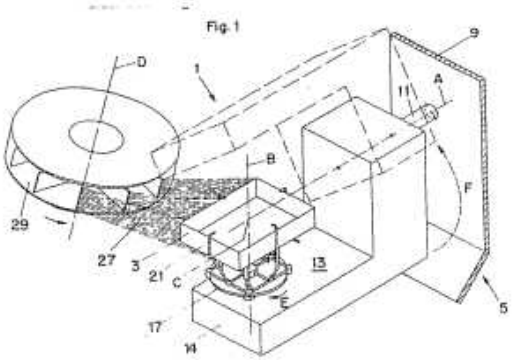

B24C 3/20

the work being supported by turn-tables

Definition statement

This place covers:

Example(s): US20060189265.

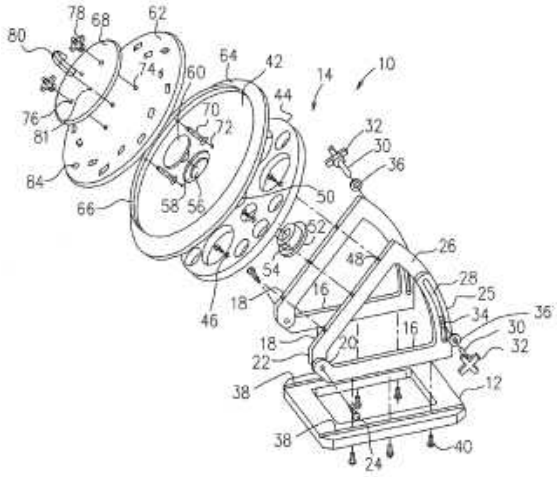

B24C 3/22

Apparatus using nozzles

Definition statement

This place covers:

Example(s): EP0927773, WO9735686, US5272897.

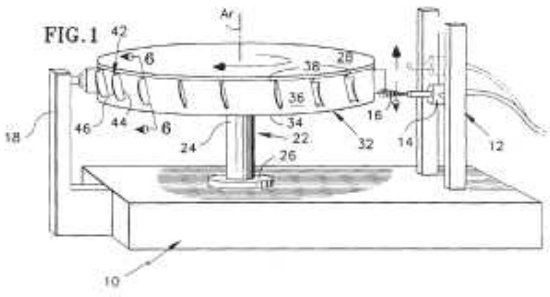

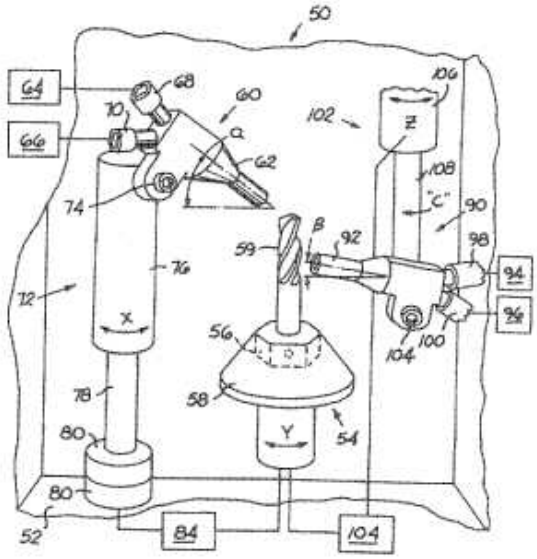
50
64
66
68
70
60
a
62
74
72
76
X
78
80
80
52
84
104
106
102
Z
108
"C"
90
98
94
96
100
104
59
β
92
56
58
54
Y

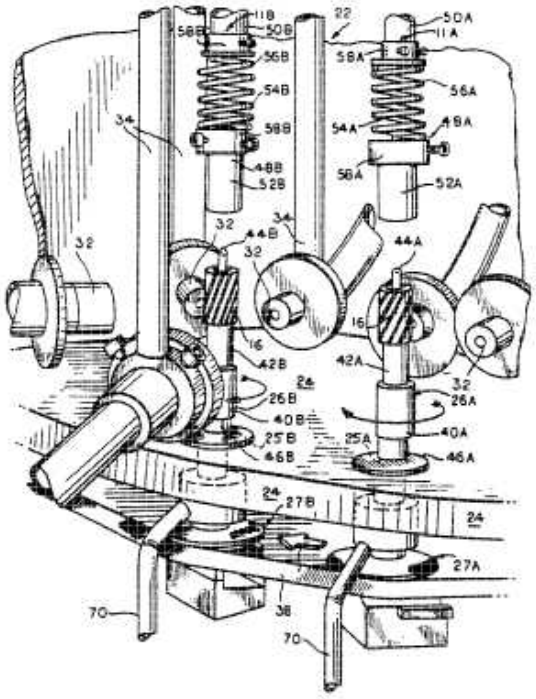
22
50A
11A
58A
56A
54A
48A
58A
52A
34
32
44A
16
42A
26A
40A
46A
25A
24
27A
70
38
70
11B
50B
56B
54B
58B
48B
52B
44B
42B
26B
40B
25B
46B
27B

B24C 3/24

Apparatus using impellers

Definition statement

This place covers:

Example(s): US6726548, DE4408643, DE4415094.

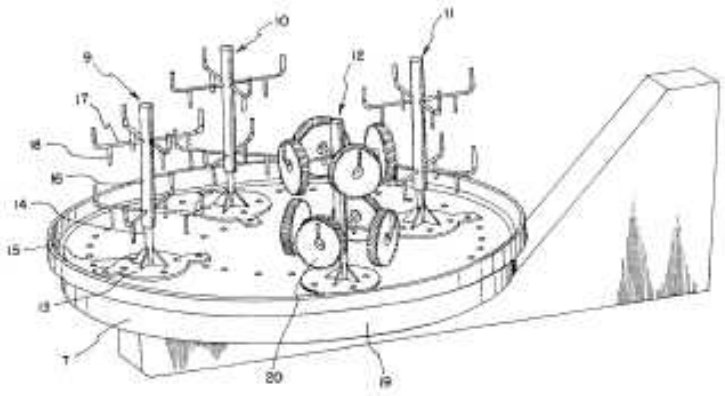

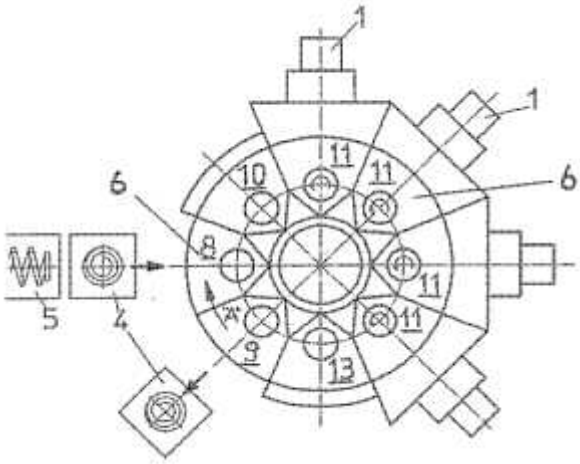

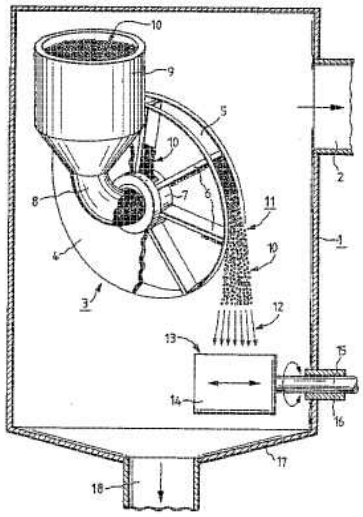

B24C 3/26

the work being supported by barrel cages, i.e. tumblers; Gimbal mountings therefor

Definition statement

This place covers:

Example(s): JP60034270, EP1172177, WO20040048036.

FIG. 1

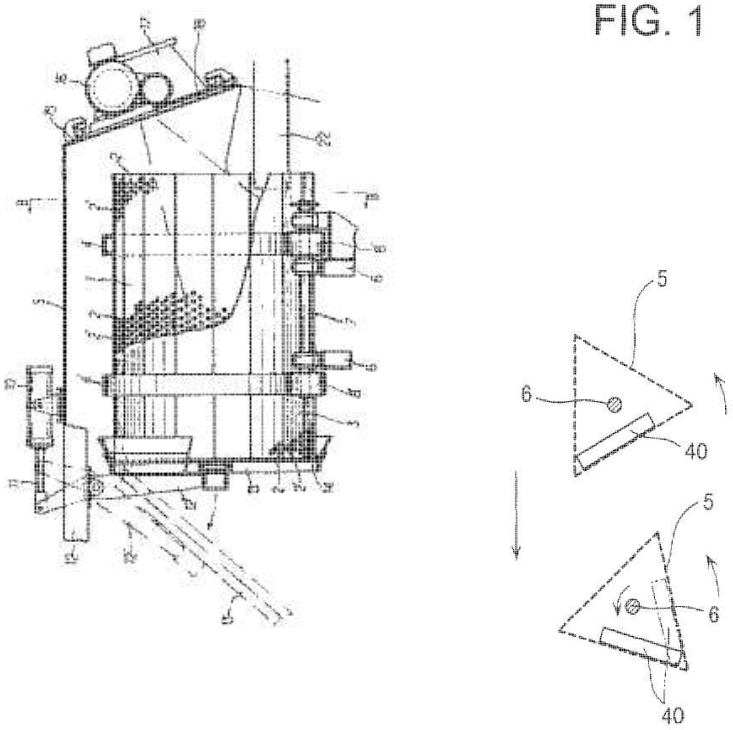

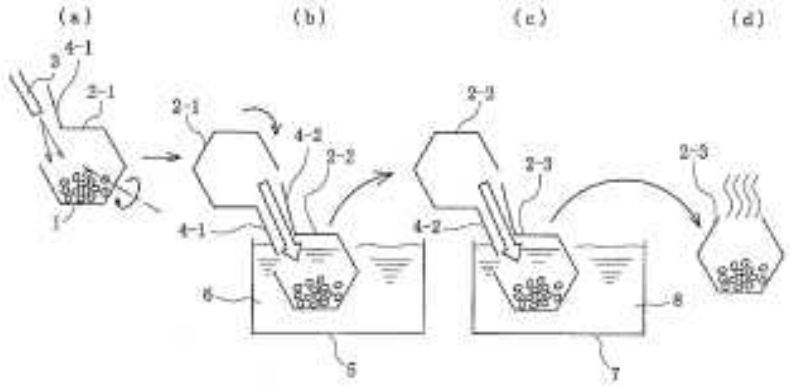

B24C 3/263

{using refrigerating means}

Definition statement

This place covers:

Example(s): US6059640.

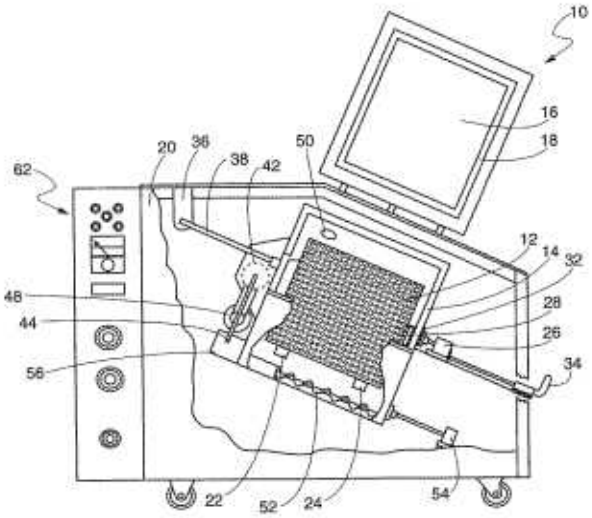

B24C 3/266

{for continuously travelling workpieces}

Definition statement

This place covers:

Example(s): CH665987, US4218854, US4003164.

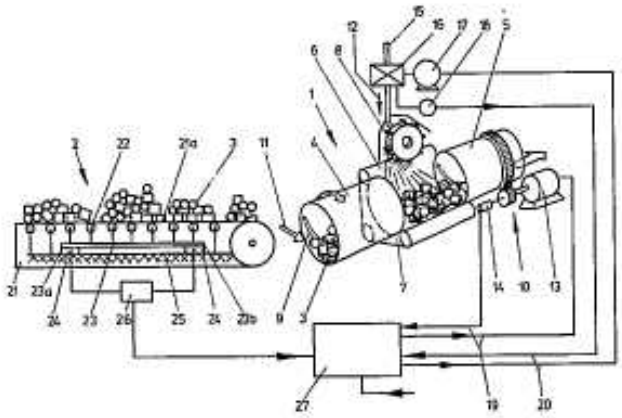

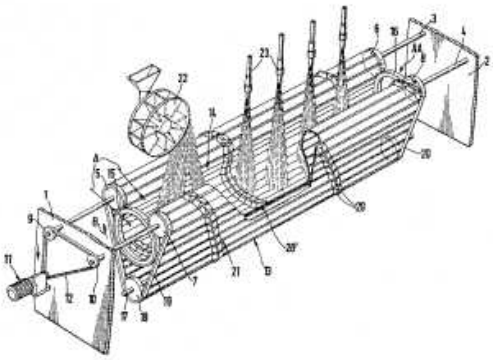

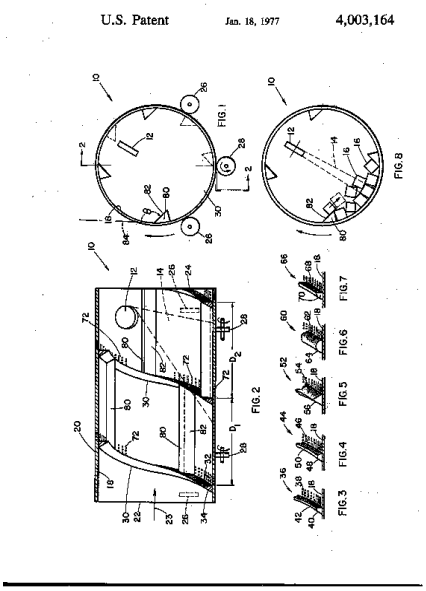

B24C 3/28

Apparatus using nozzles

Definition statement

This place covers:

Example(s): GB851361.

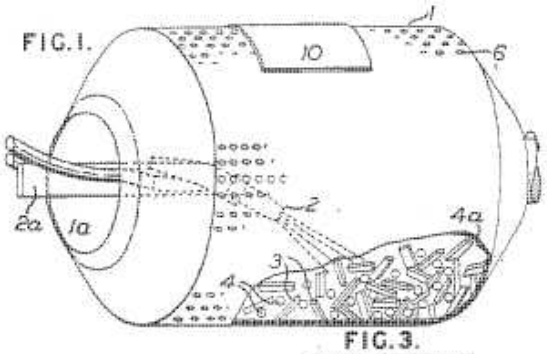

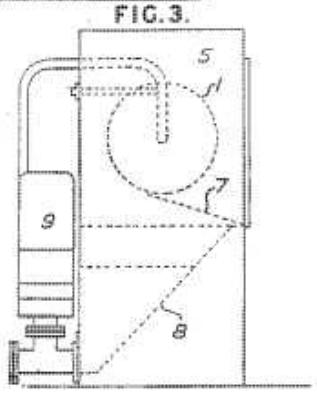

B24C 3/30

Apparatus using impellers

Definition statement

This place covers:

Example(s): GB592600.

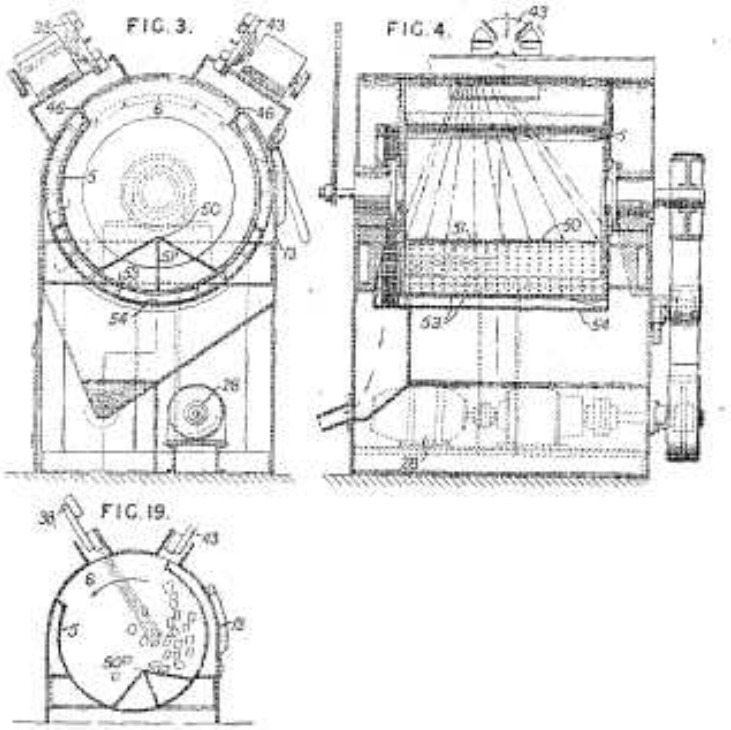

B24C 3/32

designed for abrasive blasting of particular work, e.g. the internal surfaces of cylinder blocks (B24C 3/08, B24C 3/18 take precedence)

Definition statement

This place covers:

Example(s): EP1754573, WO9505922, GB2249045, US20030070693 (method for cleaning and injection mould), US5512007 (flexible connection), DE4408645 (springs).

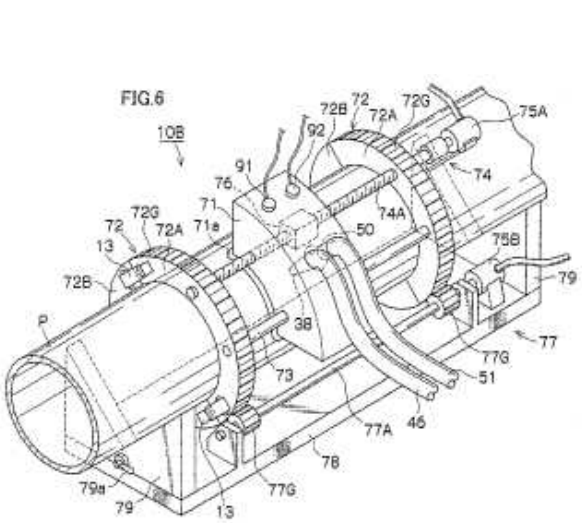

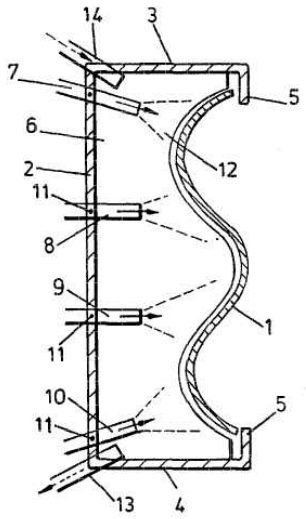

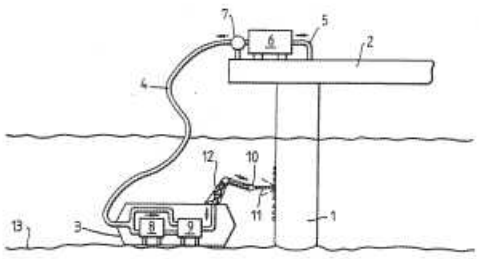

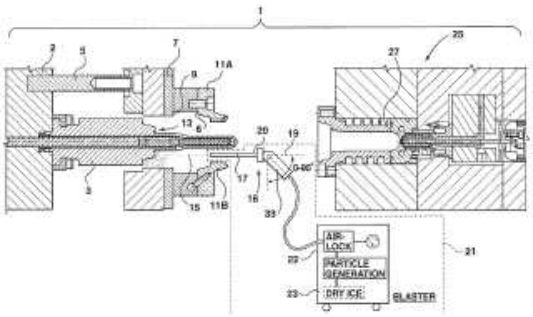

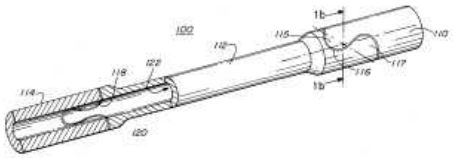

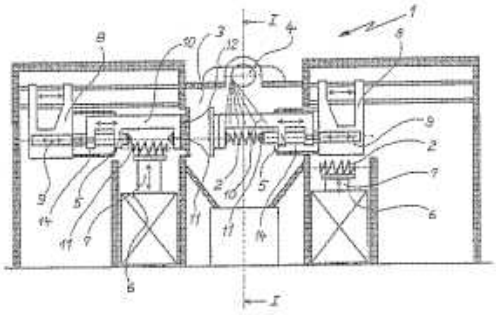

Special rules of classification

Contrary to the take-precedence-rules in the title of this subgroup, documents relating to the aspects of subgroup B24C 3/08 (abrasive blasting of traveling or moving workpieces) and documents relating to the aspects of subgroup B24C 3/18 (with means for moving workpieces into different working

positions) are covered in this subgroup B24C 3/32 when additionally relating to the aspects of this subgroup B24C 3/32 (designed for abrasive blasting of particular work).

B24C 3/322

{for electrical components}

Definition statement

This place covers:

Example(s): WO9528256 (blasting of CRT), US5916738, US20100068976 (blasting of motor conductors).

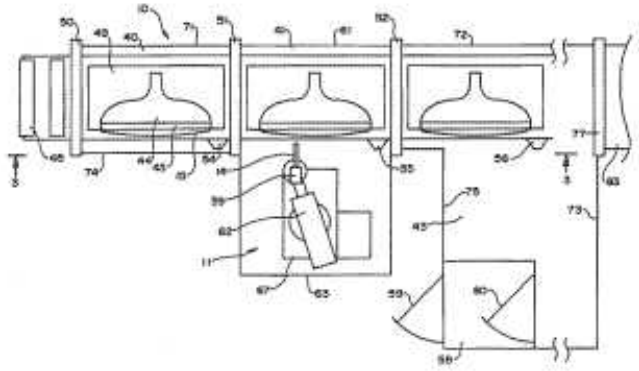

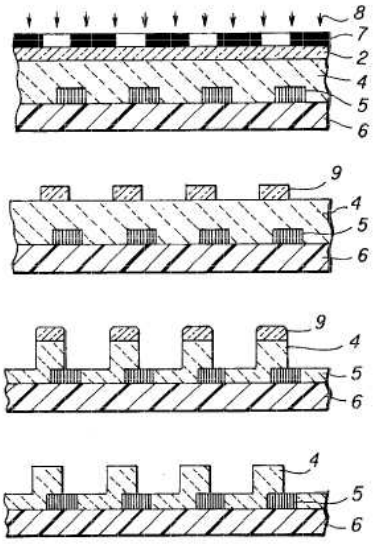

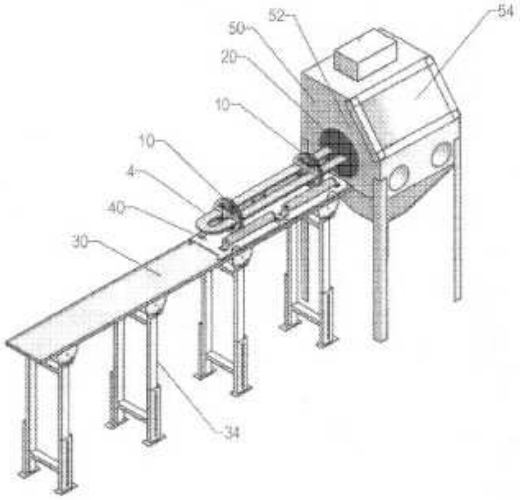

References

Limiting references

This place does not cover:

Blasting semiconductor devices e.g. with a jet of particulate matter acting like sand blasting	H01L 21/3046

B24C 3/325

{for internal surfaces, e.g. of tubes}

Definition statement

This place covers:

Example(s): DE1020070006661, EP1898003 (blasting of tunnel walls), EP1901894, US20040162009 (internal blasting of motor block), DE10341029, US20020179119 (internal blasting of concrete mixer), US6402854, EP1423237, GB850045, DE4015412.

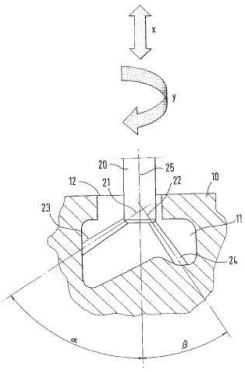

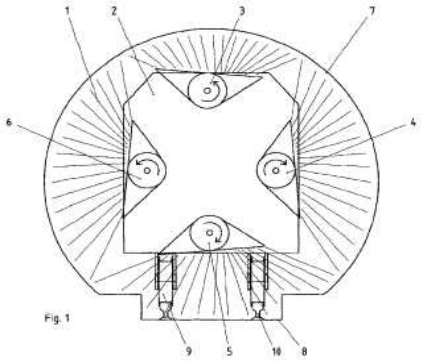

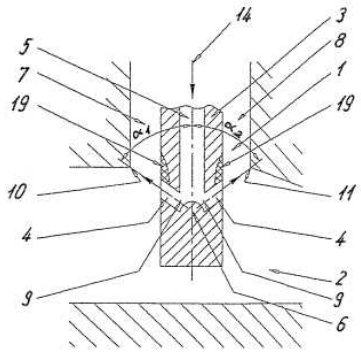

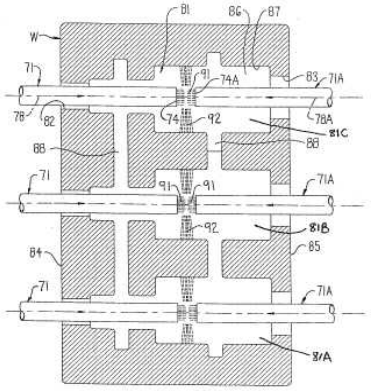

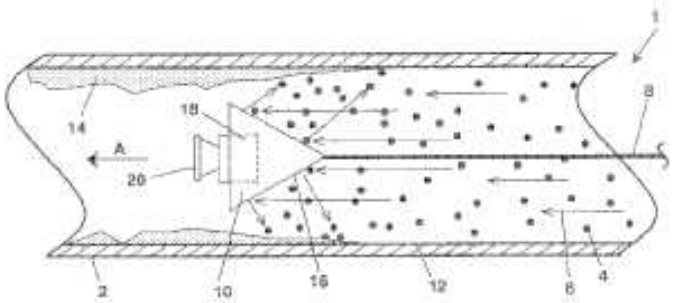

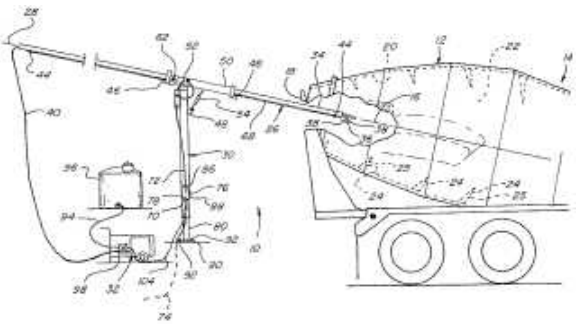

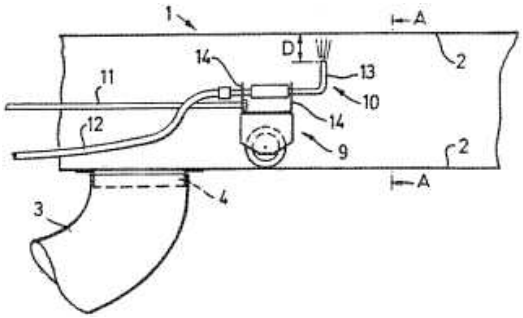

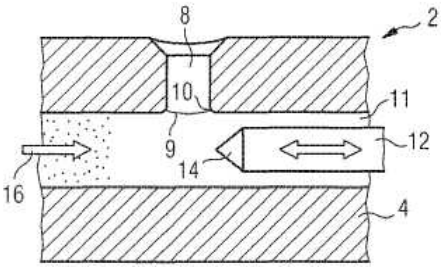

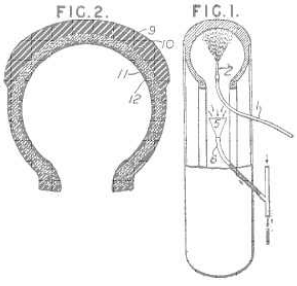

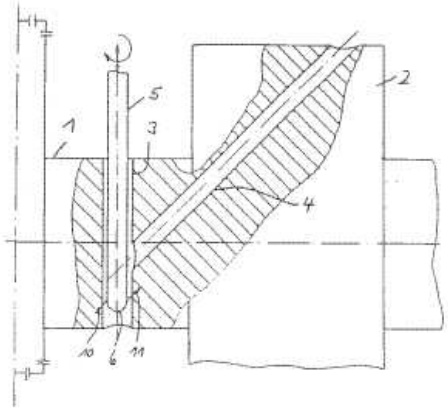

B24C 3/327

{by an axially-moving flow of abrasive particles without passing a blast gun, impeller or the like along the internal surface (polishing or abrading surfaces using plastically deformable grinding compound, moved relatively to the workpiece under the influence of pressure B24B 31/116)}

Definition statement

This place covers:

Blasting of internal surfaces with particulate matter and without passing a blast gun, impeller or the like along the internal surface.The flow is considered as blasting only when the dynamic viscosity of the carrier is less than or equal to that of conventional fuels like diesel, e.g. when water is used as a carrier.

Example(s): EP1312432, US5391256, DE4420579.

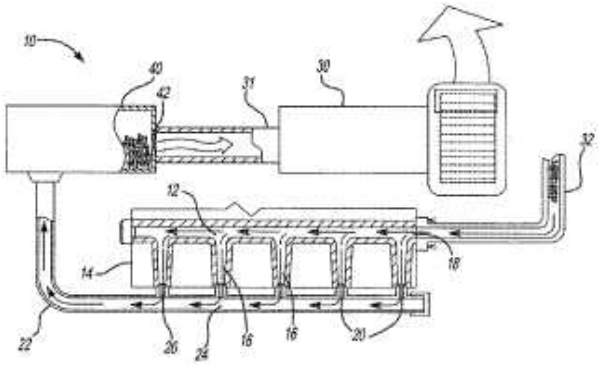

Fig-2

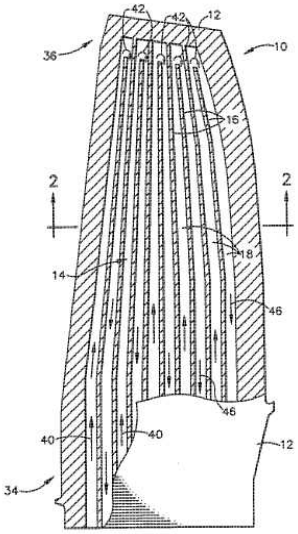

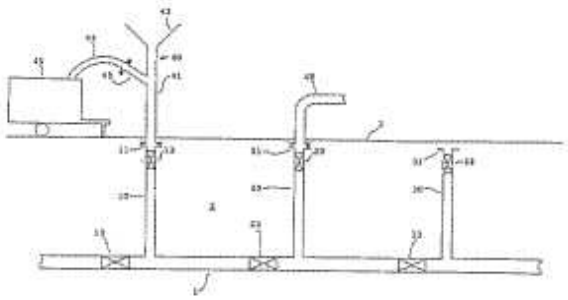

References

Limiting references

This place does not cover:

Machining of internal surfaces with plastically deformable grinding compound, i.e. when the dynamic viscosity of the carrier medium is higher than that of conventional fuels like diesel	B24B 31/116

B24C 3/34

for cleaning sparking plugs

Definition statement

This place covers:

Example(s): US3704552, US3913273.

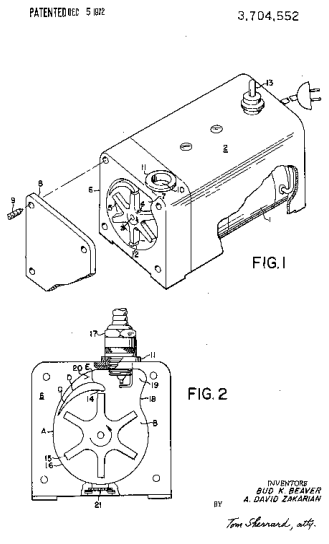

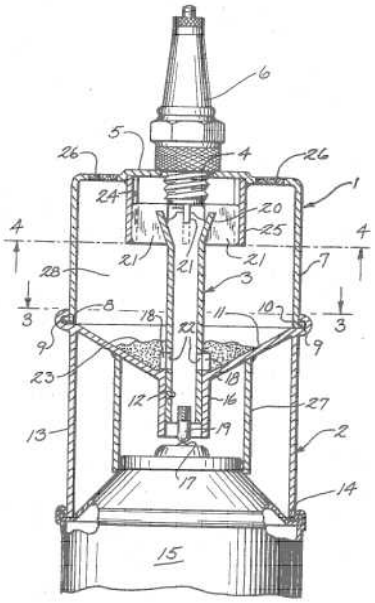

B24C 5/00

Devices or accessories for generating abrasive blasts

Definition statement

This place covers:

e.g. abrasive blasting with particles by jet flame processing.

Example(s): GB938025, US4616787, EP1539424 (jet flame abrasive blasting) EP1155781.

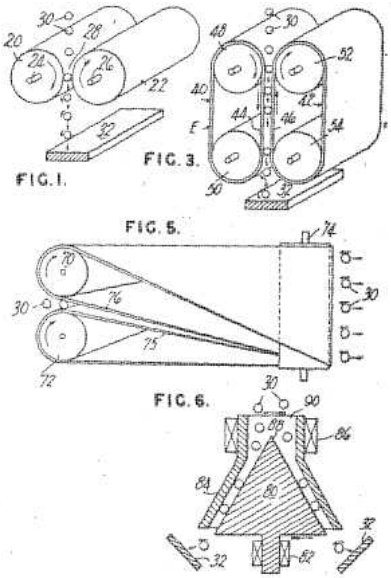

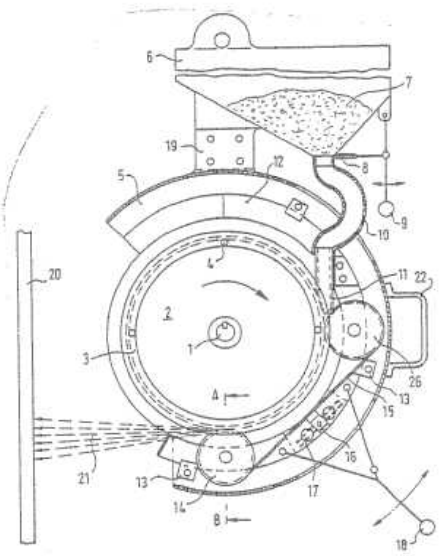

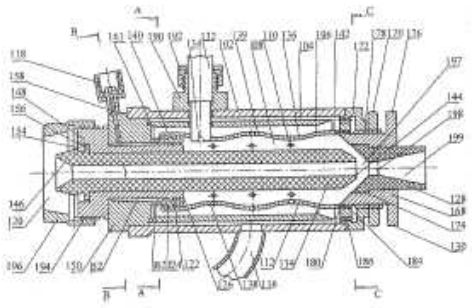

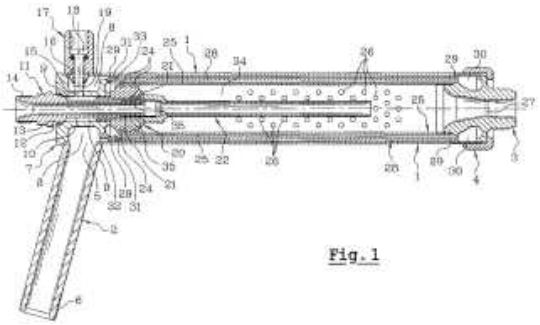

References

Informative references

Attention is drawn to the following places, which may be of interest for search:

Jet flame processing in general	B05B 7/205

B24C 5/005

{Vibratory devices, e.g. for generating abrasive blasts by ultrasonic vibrations (sonic cleaning in general B08B 3/12)}

Definition statement

This place covers:

Example(s): EP1207013, FR2689431.

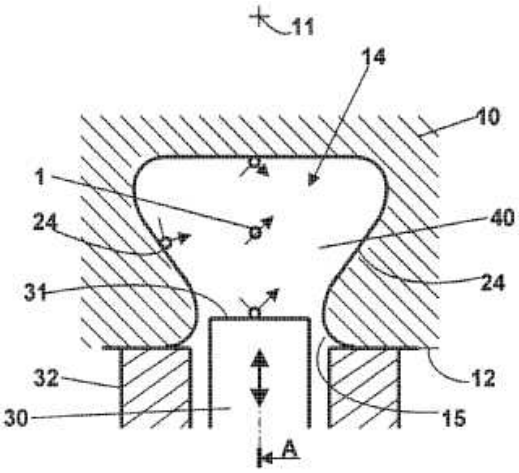

Fig : 4

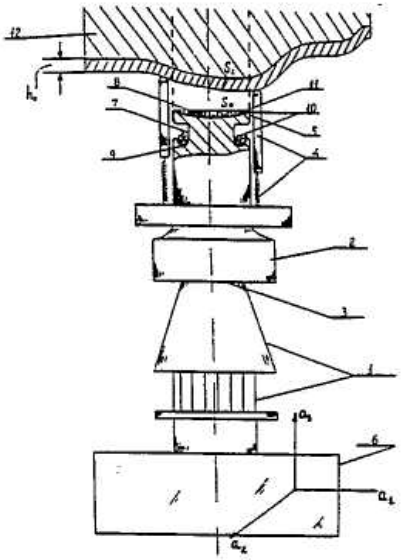

References

Informative references

Attention is drawn to the following places, which may be of interest for search:

Sonic cleaning in general	B08B 3/12

B24C 5/02

Blast guns, e.g. for generating high velocity abrasive fluid jets for cutting materials {(perforating by fluid jet B26F 1/26)}

Definition statement

This place covers:

Example(s): US7341504, US20060276112, DE19804233, US5908349, US4932592, EP0083614.

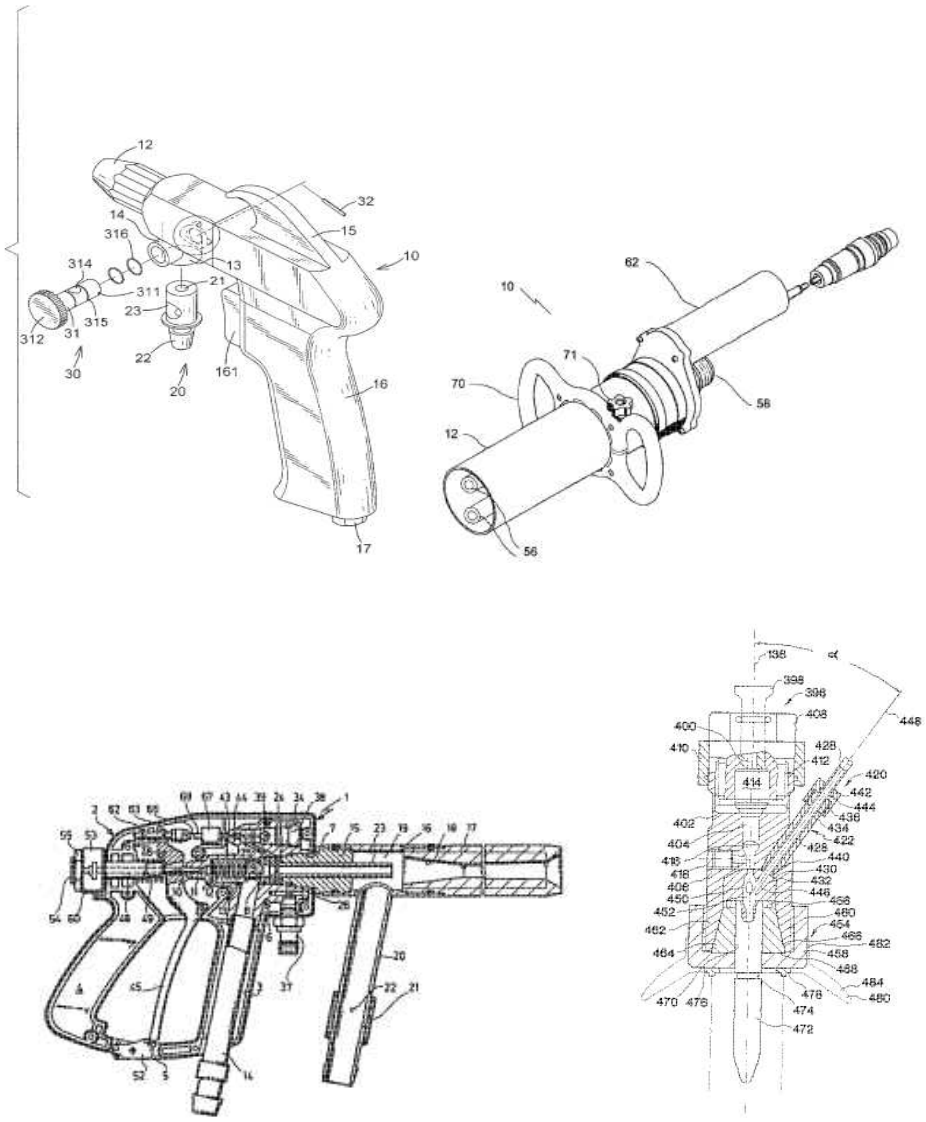

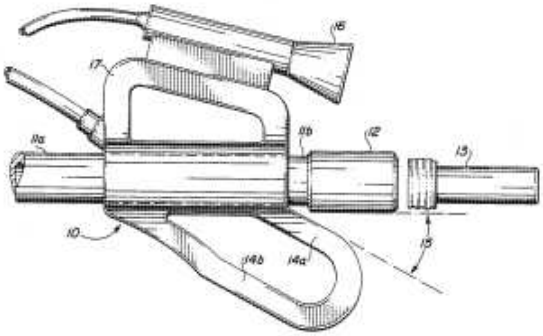

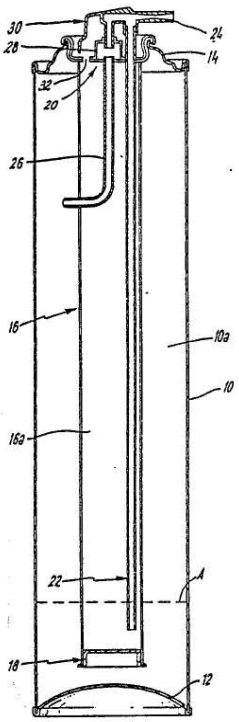

References

Informative references

Attention is drawn to the following places, which may be of interest for search:

Perforating by means of a fluid jet without particles	B26F 1/26
Severing by means of a fluid jet without particles	B26F 3/004

B24C 5/04

Nozzles therefor (nozzles in general B05B)

Definition statement

This place covers:

Example(s): EP1574290, FR2866586, DE10243855, WO03103899, EP1178873, US20030045217, US6695686, US5704825, US5484325.

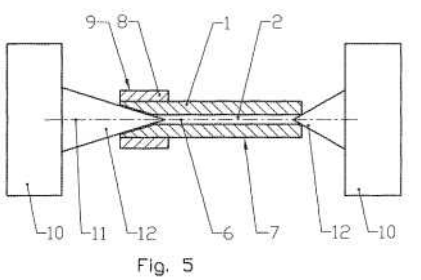

Fig. 5

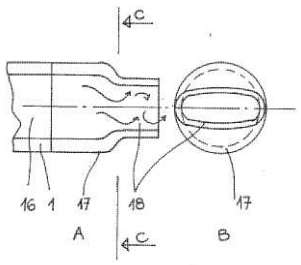

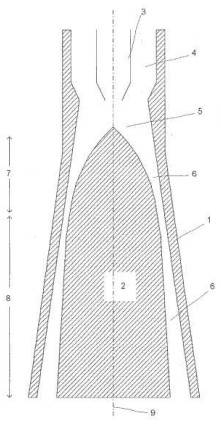

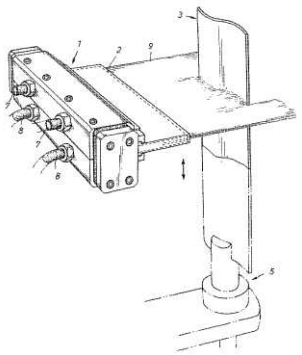

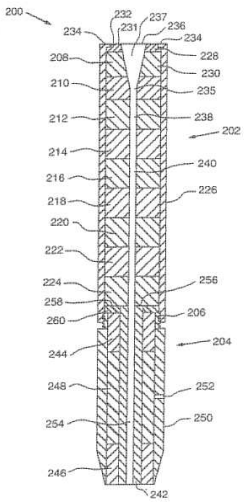

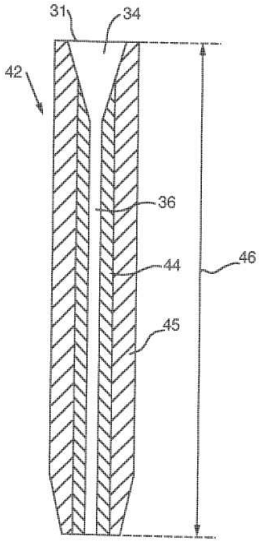

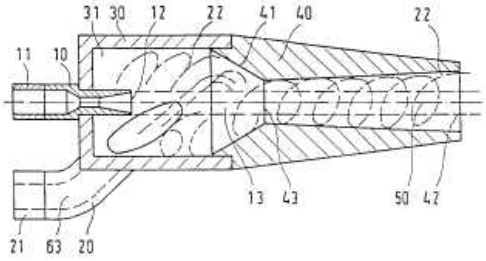

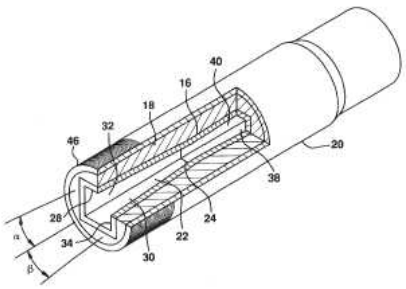

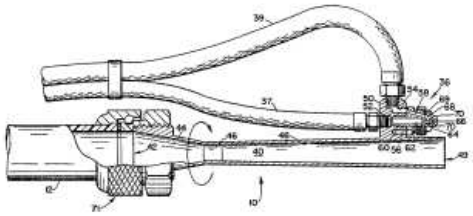

References

Informative references

Attention is drawn to the following places, which may be of interest for search:

Nozzles in general, Spraying or atomising in general	B05B

B24C 5/06

Impeller wheels; Rotor blades therefor

Definition statement

This place covers:

Example(s): WO20070072863, WO0239078, US6126516, US5779524, DE3505468.

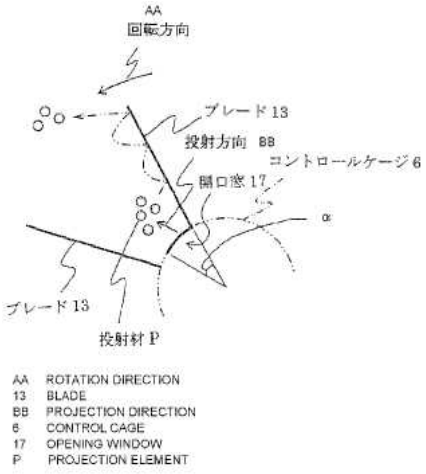

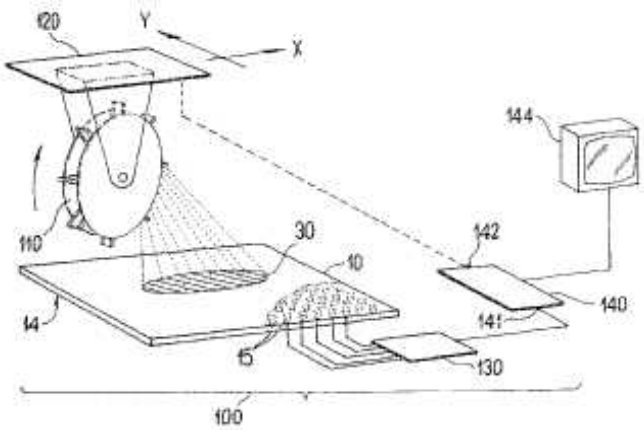

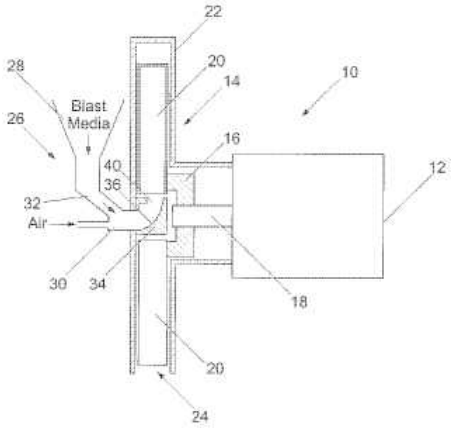

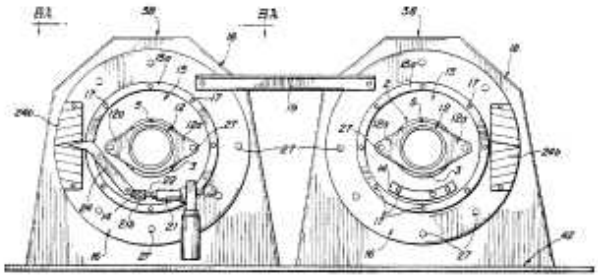

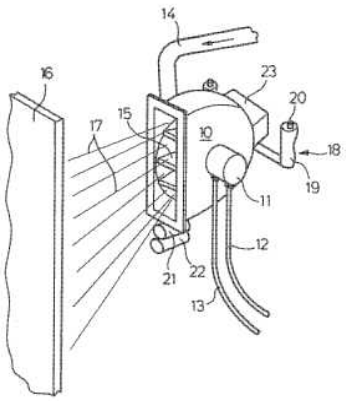

B24C 5/062

{Rotor blades or vanes; Locking means therefor}

Definition statement

This place covers:

Example(s): EP1352713, US5759091, EP0688633, GB985743, GB1101107, US4069025.

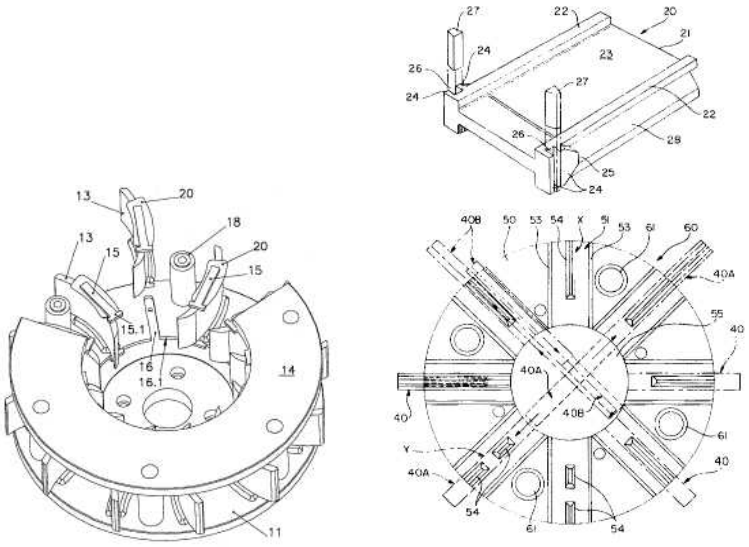

Fig. 3

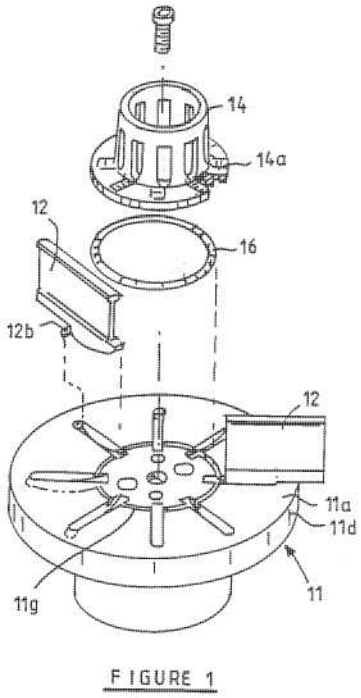

FIGURE 1

Fig. 2

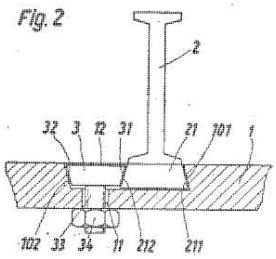

Fig. 4

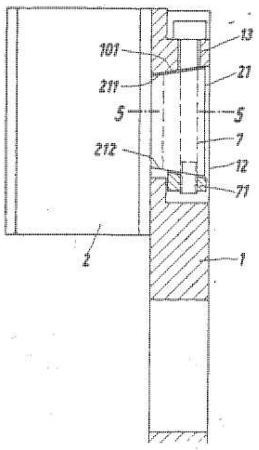

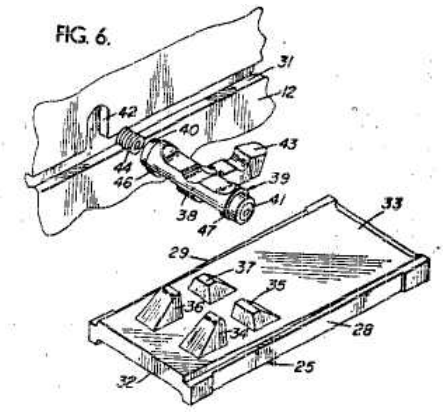

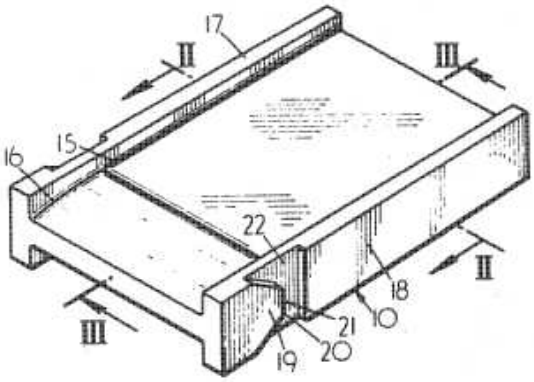

B24C 5/064

{One-piece wheels; Integral impeller units, e.g. made by casting}

Definition statement

This place covers:

Example(s): EP1412133, US4244150.

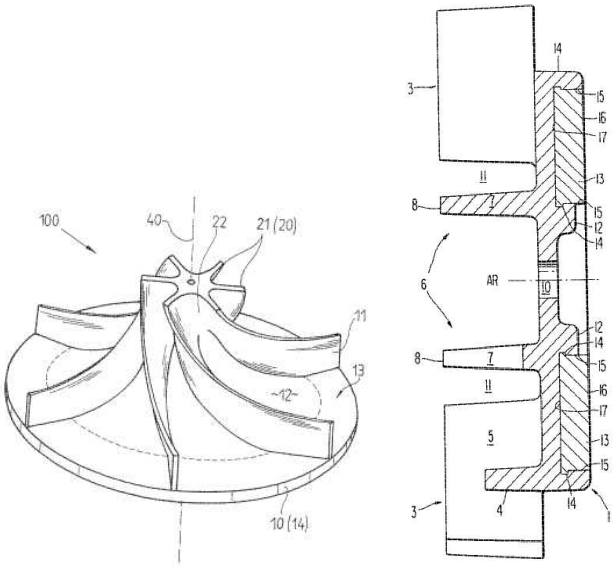

B24C 5/066

{Housings; Accessories therefor, e.g. liners}

Definition statement

This place covers:

Example(s): US6692340, WO0200393, US5076028.

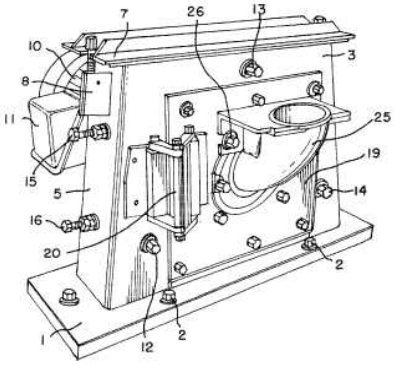

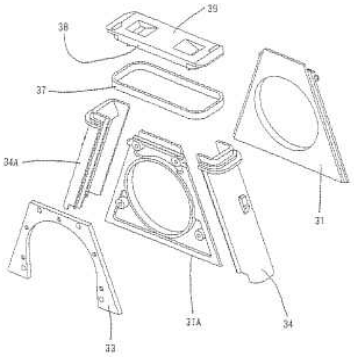

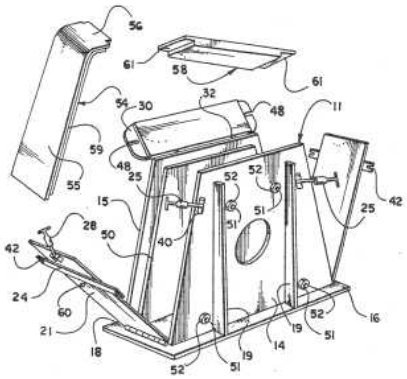

B24C 5/068

{Transferring the abrasive particles from the feeding means onto the propeller blades, e.g. using central impellers}

Definition statement

This place covers:

Example(s): EP1360035, EP1354667, US5688162.

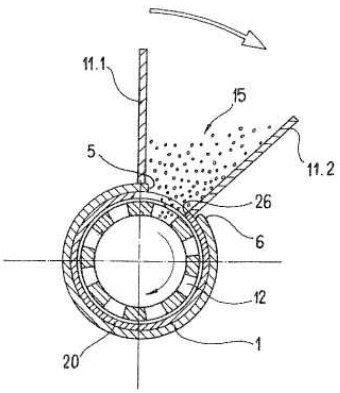

Fig 2

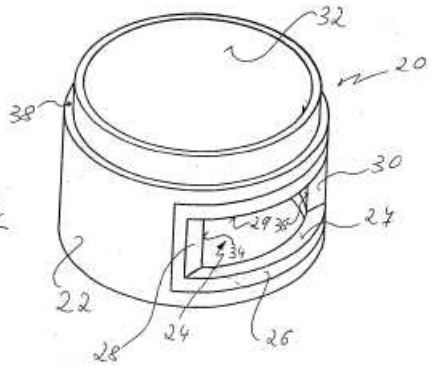

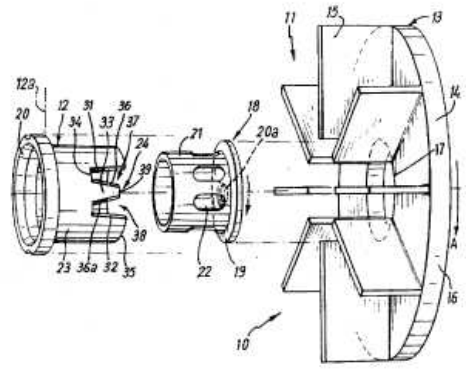

B24C 5/08

Devices for generating abrasive blasts non-mechanically, e.g. of metallic abrasives by means of a magnetic field {or by detonating cords}

Definition statement

This place covers:

Example(s): US20040259473 (magnetically), US5211135 (detonation cord clusters for deslagging water boilers).

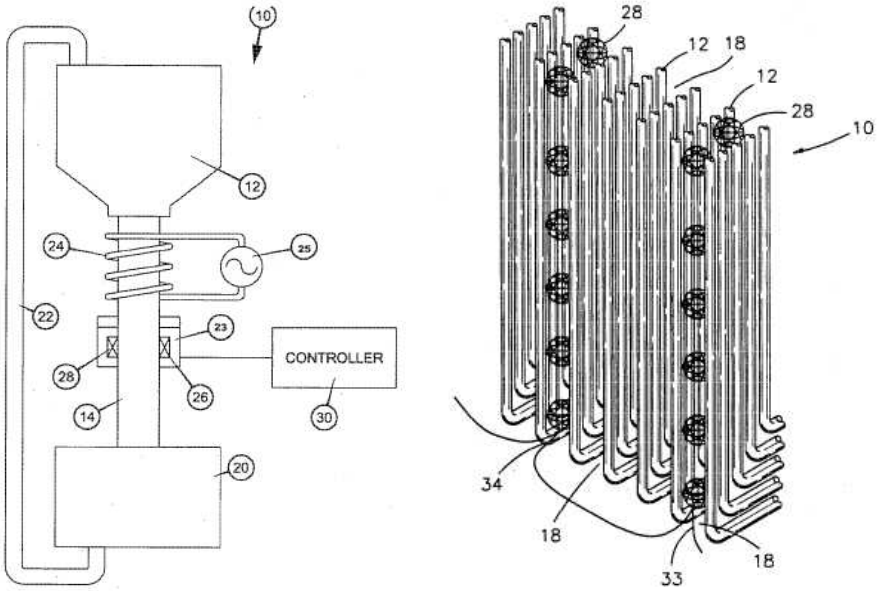

References

Informative references

Attention is drawn to the following places, which may be of interest for search:

Abrasive blasting by jet flame processing	B24C 5/00
Jet flame processing in general	B05B 7/205
Use of magnetic polishing media without forming a blasting jet	B24B 1/005

B24C 7/00

Equipment for feeding abrasive material; Controlling the flowability, constitution, or other physical characteristics of abrasive blasts

Definition statement

This place covers:

Equipment for feeding and controlling the characteristics of abrasive blasting material

B24C 7/0007

{the abrasive material being fed in a liquid carrier}

Definition statement

This place covers:

Example(s): EP0322485, GB731117, EP1557223.

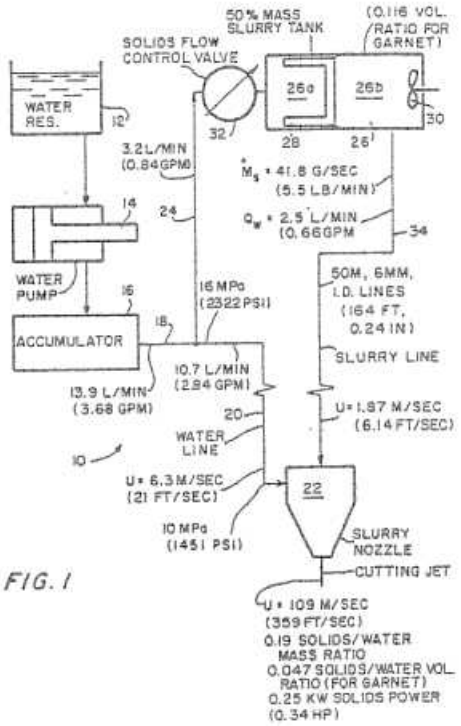

FIG. 1

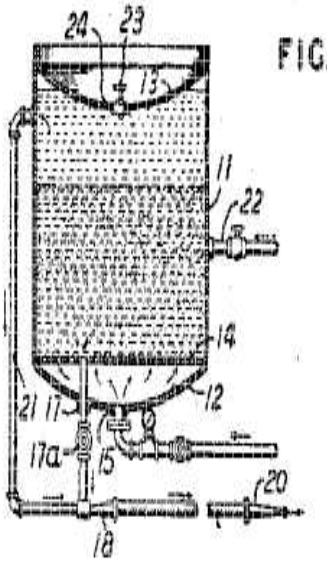

FIG. 1.

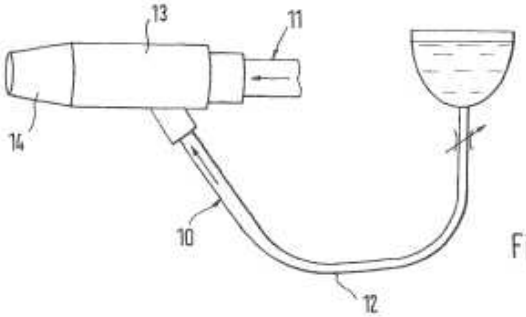

Fig.2

B24C 7/0015

{with control of feed parameters, e.g. feed rate of abrasive material or carrier}

Definition statement

This place covers:

Example(s): DE19933339, US5283991.

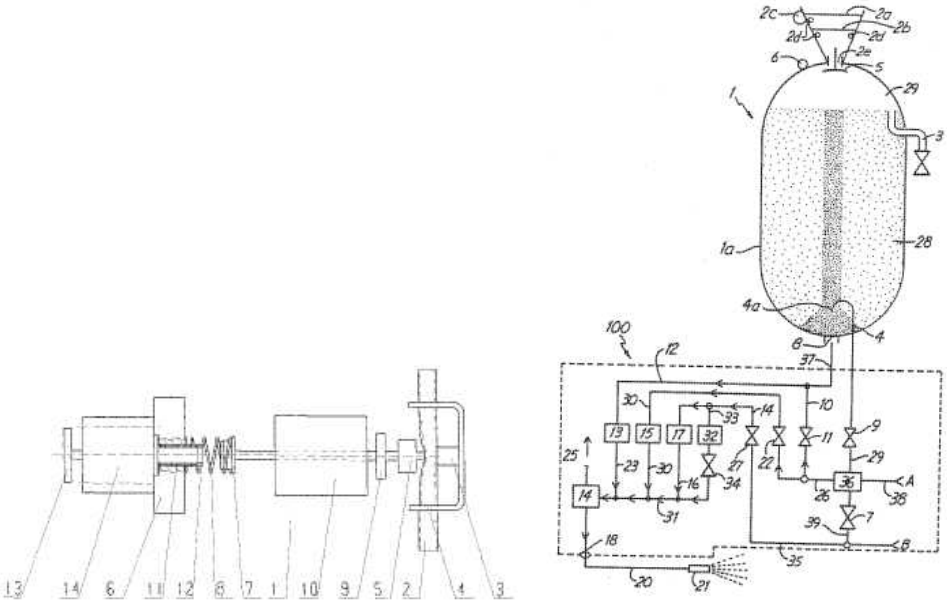

B24C 7/0023

{of feed pressure}

Definition statement

This place covers:

Example(s): US20070207702, JP59001167.

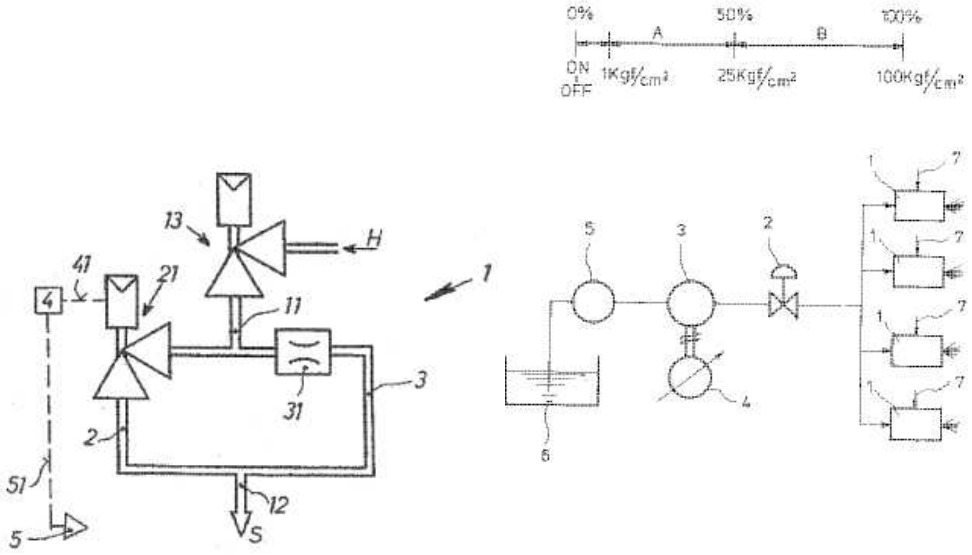

B24C 7/003

{with means for preventing clogging of the equipment}

Definition statement

This place covers:

Example(s): GB1424896.

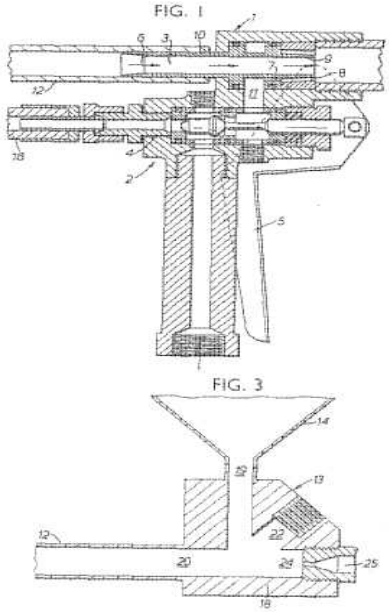

B24C 7/0038

{the blasting medium being a gaseous stream}

Definition statement

This place covers:

Example(s): DE10260257, DE4335382.

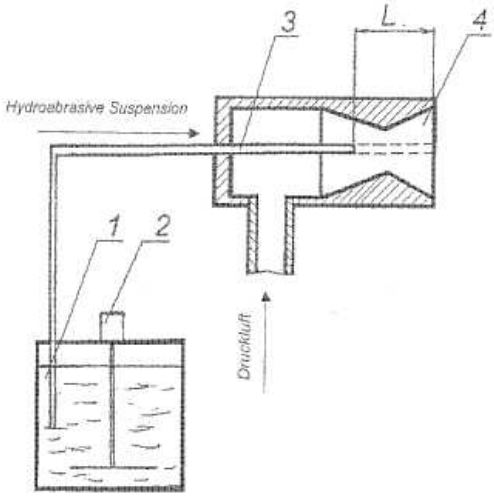

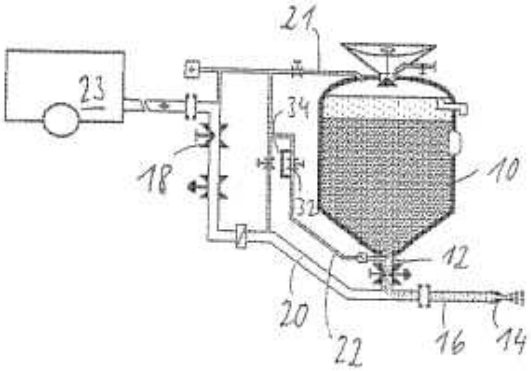

B24C 7/0046

{the abrasive material being fed in a gaseous carrier}

Definition statement

This place covers:

Example(s): DE1020070039540.

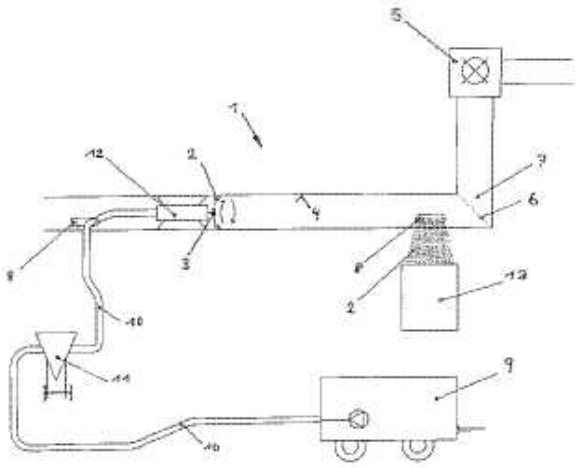

B24C 7/0053

{with control of feed parameters, e.g. feed rate of abrasive material or carrier}

Definition statement

This place covers:

Example(s): DE10235097, US20070287126, EP2001637.

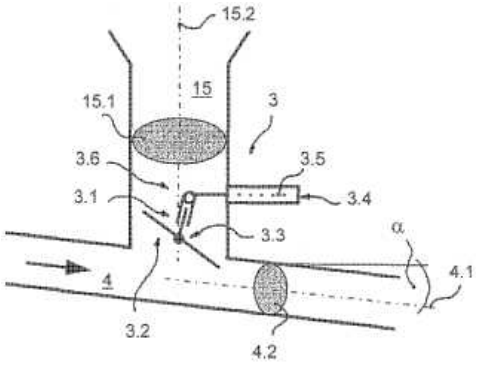

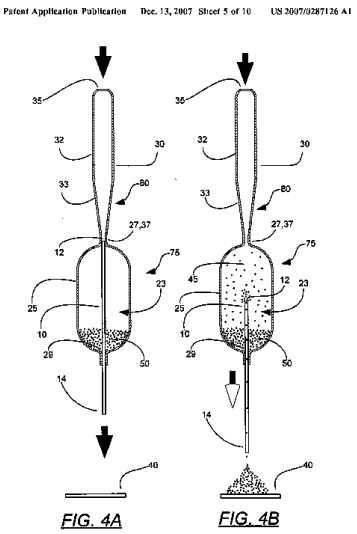

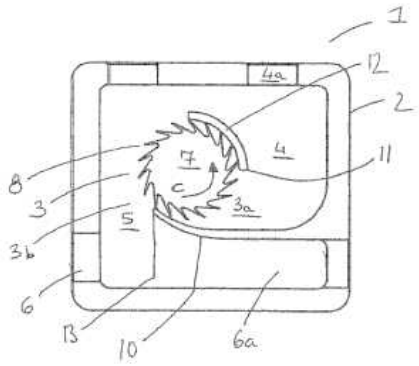

B24C 7/0061

{of feed pressure}

Definition statement

This place covers:

Example(s): EP0992221, US5081799.

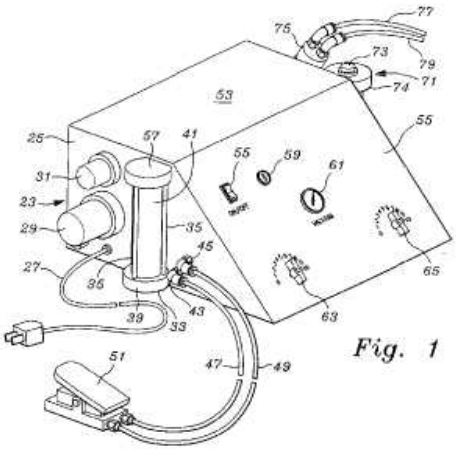

Fig. 1

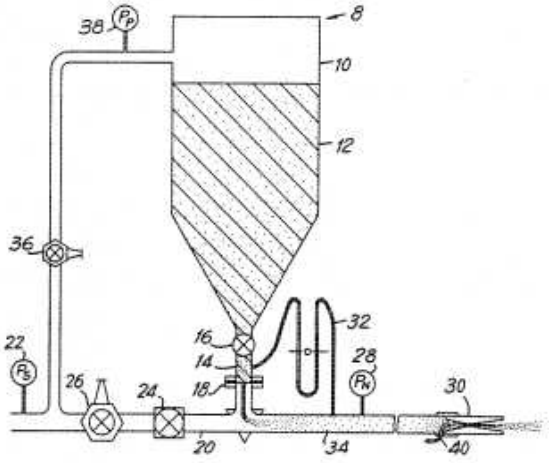

B24C 7/0069

{with means for preventing clogging of the equipment or for preventing abrasive entering the airway}

Definition statement

This place covers:

Example(s): EP1851003, WO20040101224, WO9635389, EP0652078, US4569161, US3858360.

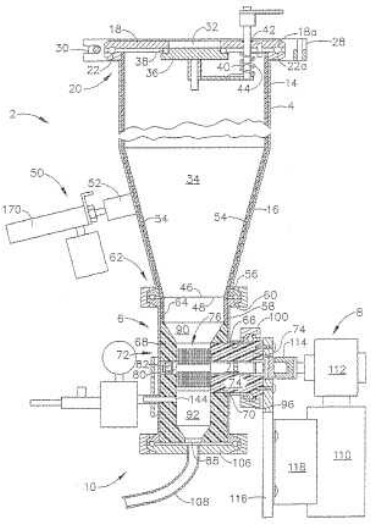

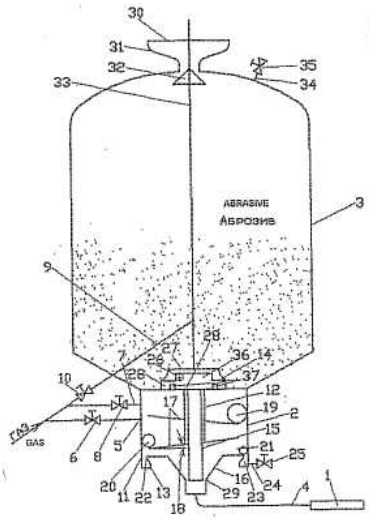

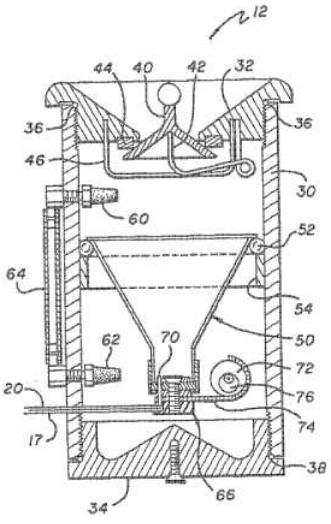

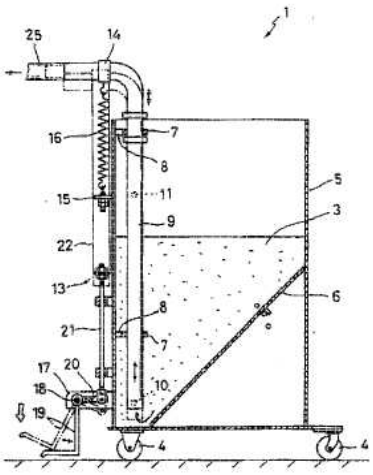

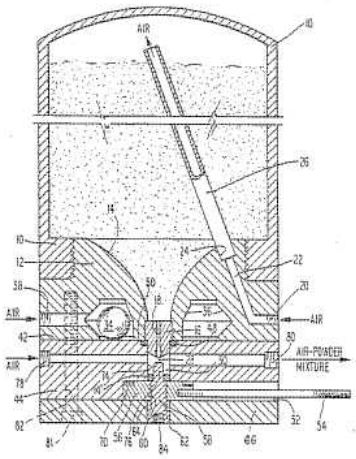

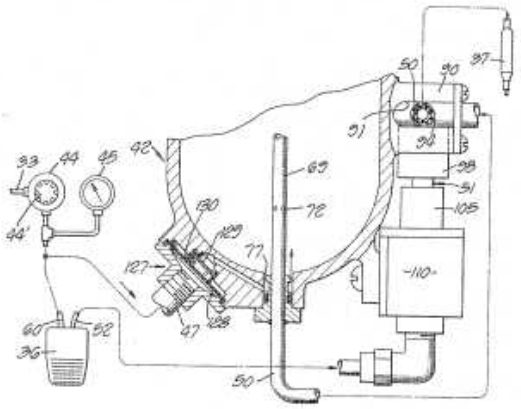

B24C 7/0076

{the blasting medium being a liquid stream}

Definition statement

This place covers:

Example(s): DE10348805, US4666083, US4218855.

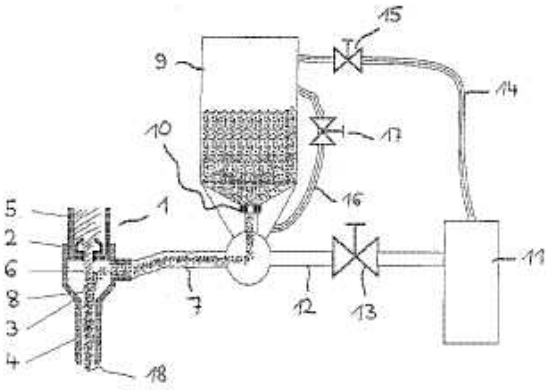

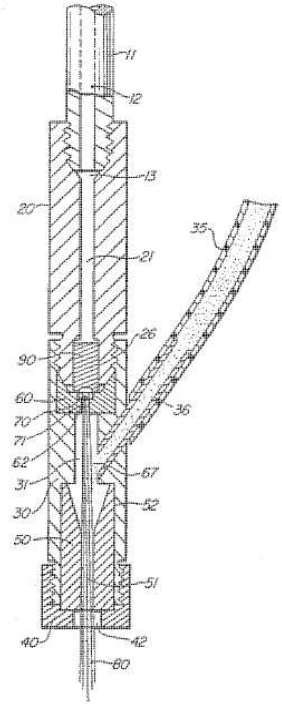

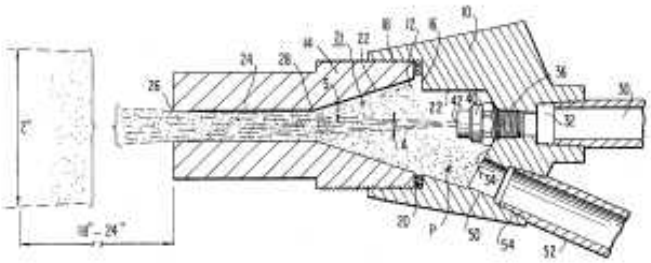

B24C 7/0084

{the abrasive material being fed in a mixture of liquid and gas (B24C 7/0038, B24C 7/0076 take precedence; blasting medium with additives B24C 11/005)}

Definition statement

This place covers:

E.g. blasting where the abrasive is first mixed with liquid and a gas and then the mixture is fed and propelled to the working surface, or where the abrasive is added to a premixed flow of liquid and gas, or where a shrouding water curtain or water jet is added to the mixture jet of gas and abrasive.

Example(s): US20110053464, US20110053464, US5283991, WO9408753, GB498478, DE1020040023246.

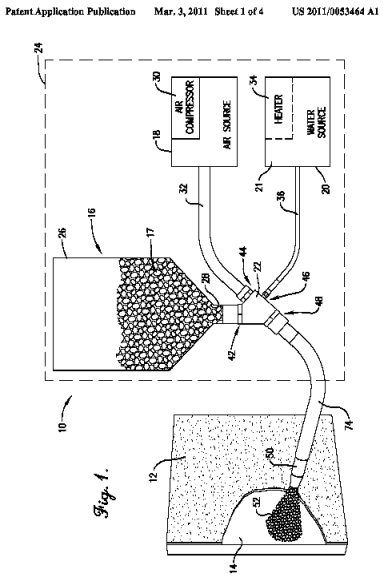

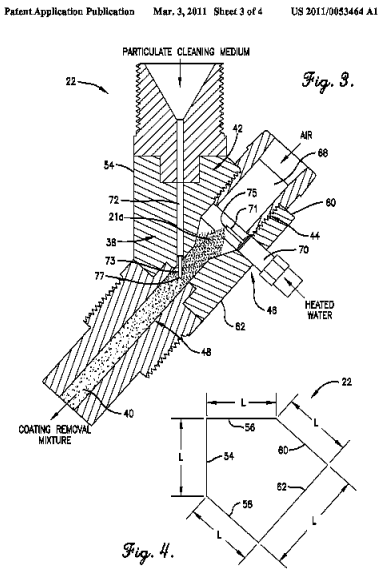

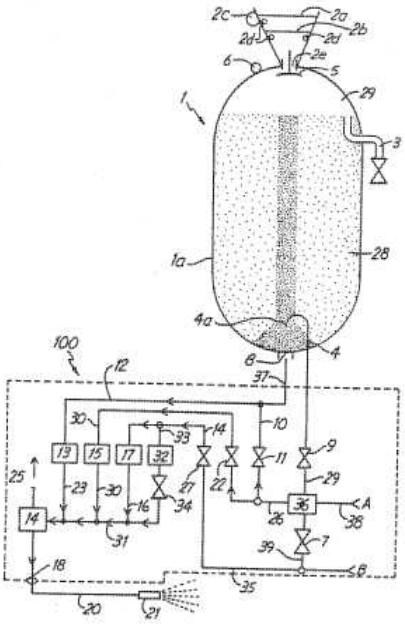

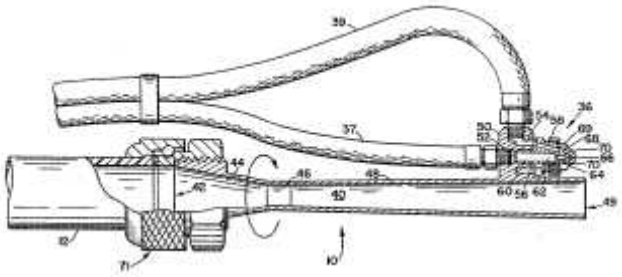

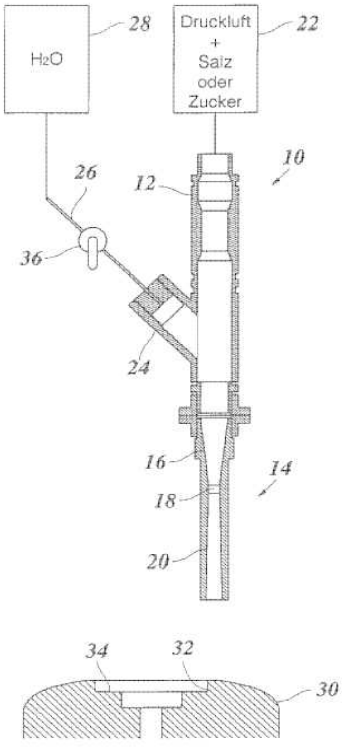

FIG. 1.

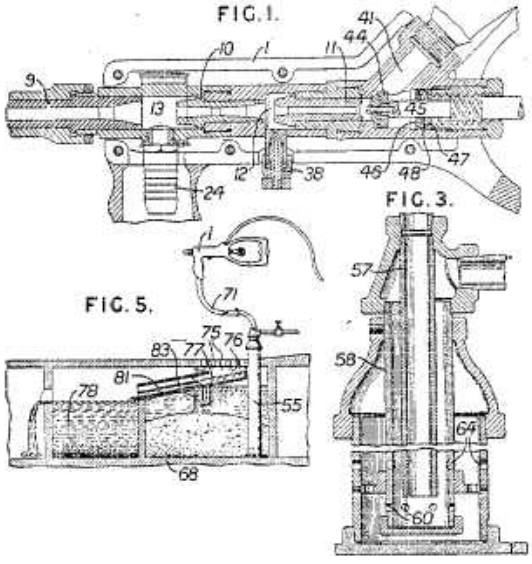

FIG. 3.

FIG. 5.

References

Limiting references

This place does not cover:

Blasting with abrasive, liquid and gas, where either the gas or the liquid is used as a blasting medium to propel the mixture of the other two constituents	B24C 7/0038, B24C 7/0076
Blasting with abrasive, liquid and gas, where one of the constituents is used as an additive	B24C 11/005

B24C 7/0092

{the abrasive material being fed by mechanical means, e.g. by screw conveyors}

Definition statement

This place covers:

Example(s): DE10317663, DE3445643, GB2108399, JP58202777, WO20090096122.

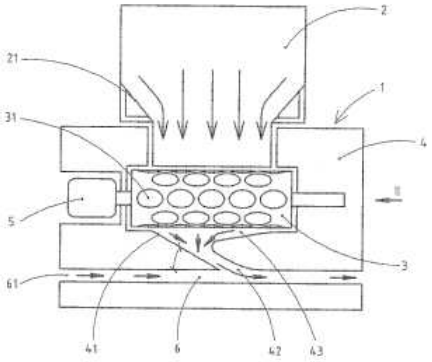

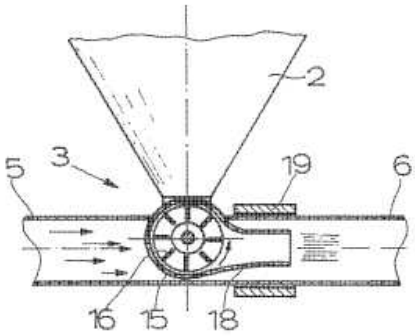

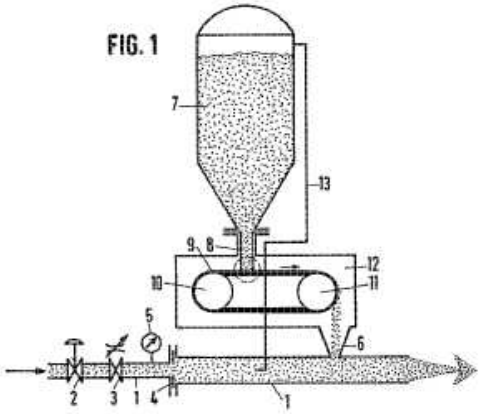

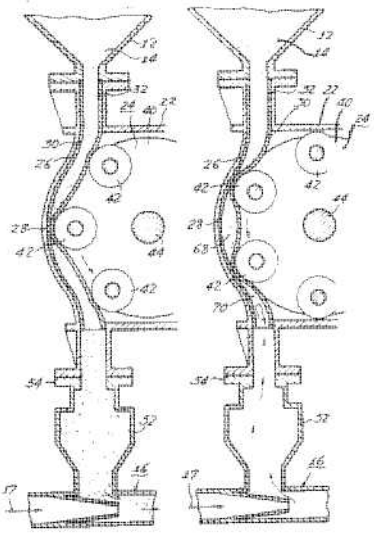

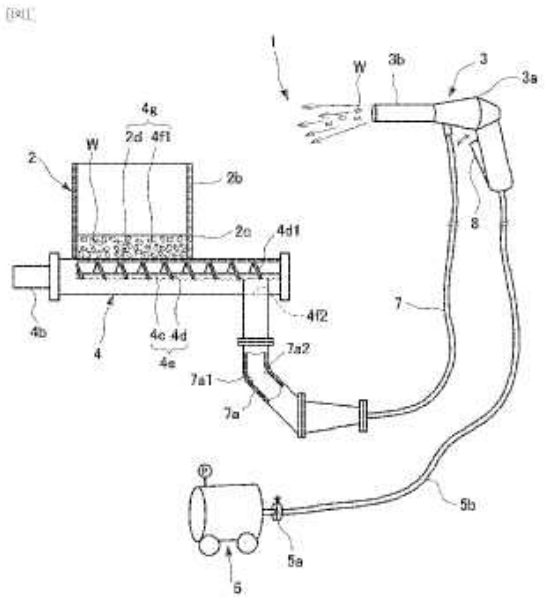

B24C 9/00

Appurtenances of abrasive blasting machines or devices, e.g. working chambers, arrangements for handling used abrasive material

Definition statement

This place covers:

Example(s): EP2335852, US20110053458, DE1020080011663, US20060260823, DE10216468, US5367841, US4882881, US4139970.

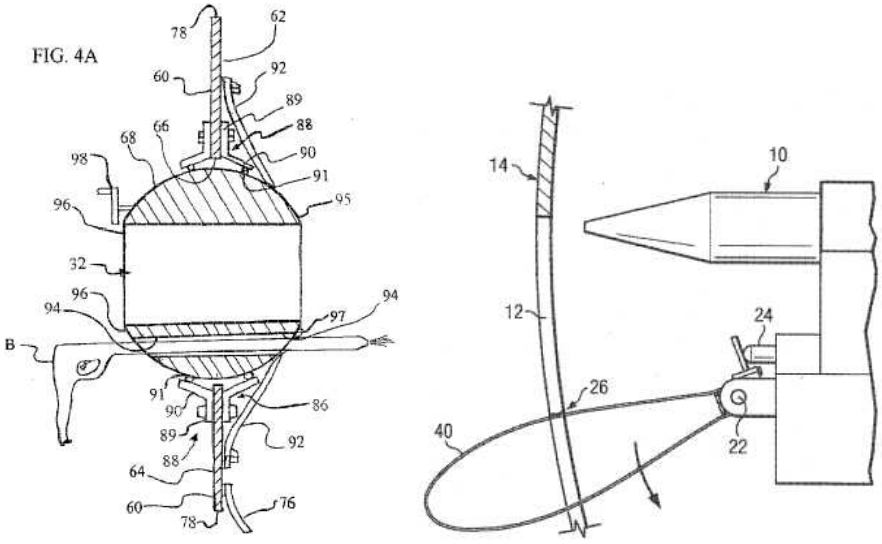

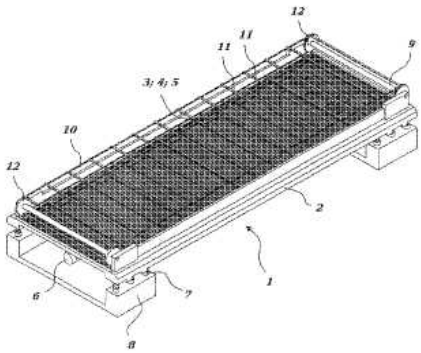

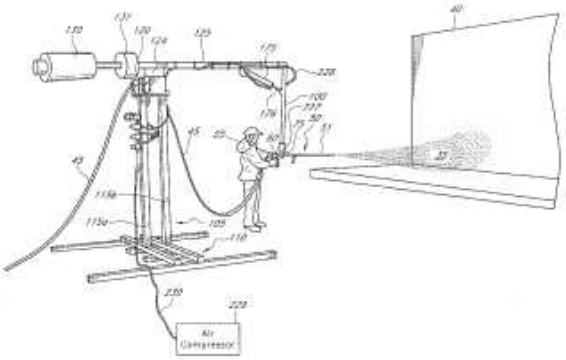

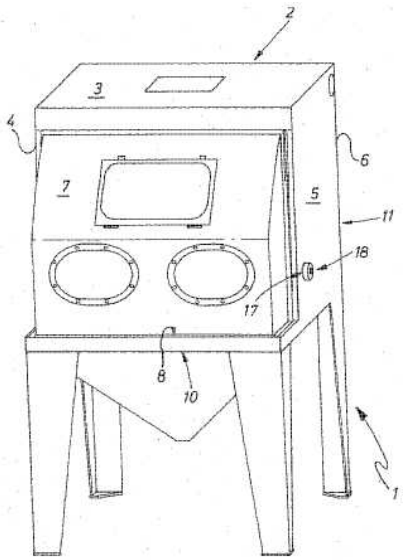

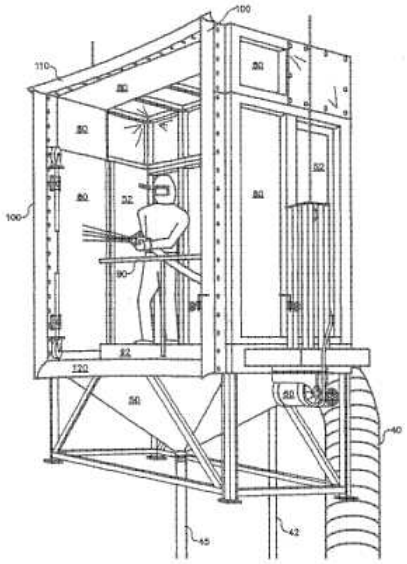

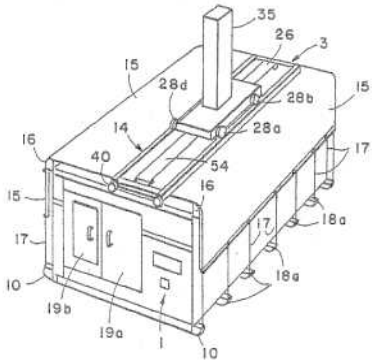

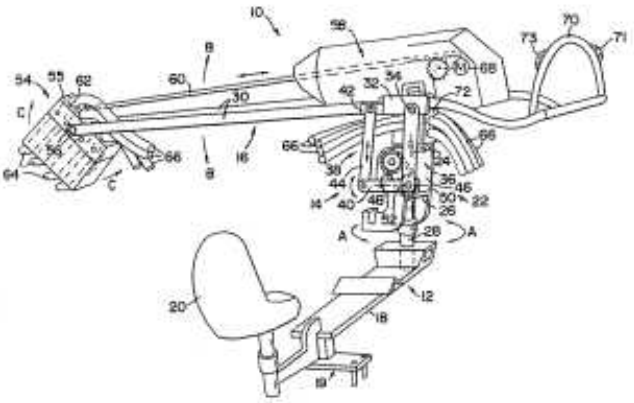

B24C 9/003

{Removing abrasive powder out of the blasting machine}

Definition statement

This place covers:

Example(s): DE19926084, DE4407956.

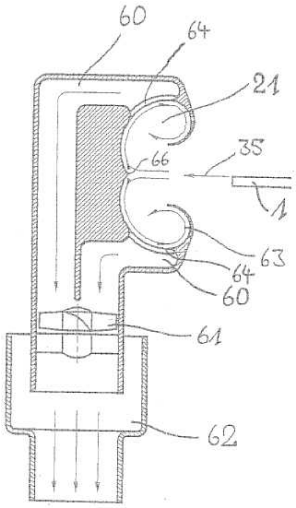

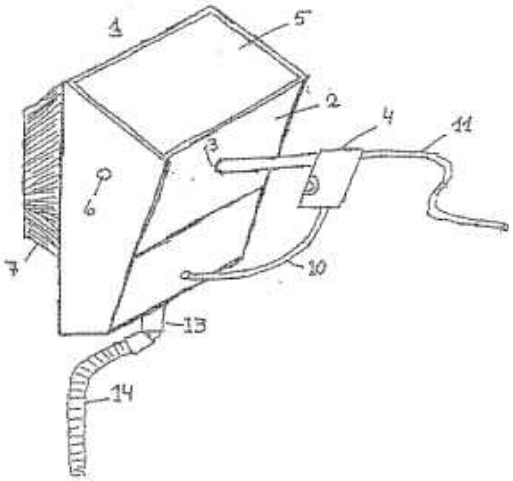

B24C 9/006

{Treatment of used abrasive material}

Definition statement

This place covers:

Example(s): EP1603709 GB2367777, US4275531, GB2337953.

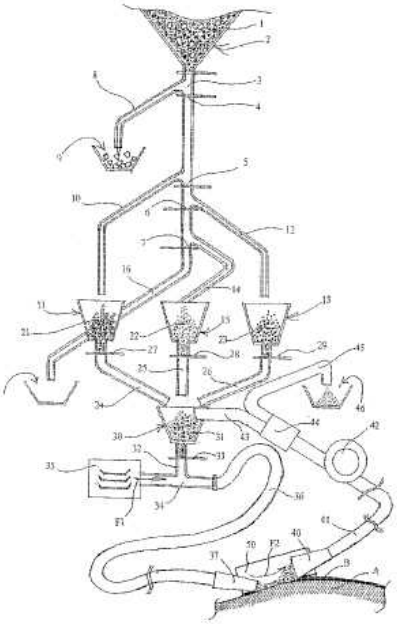

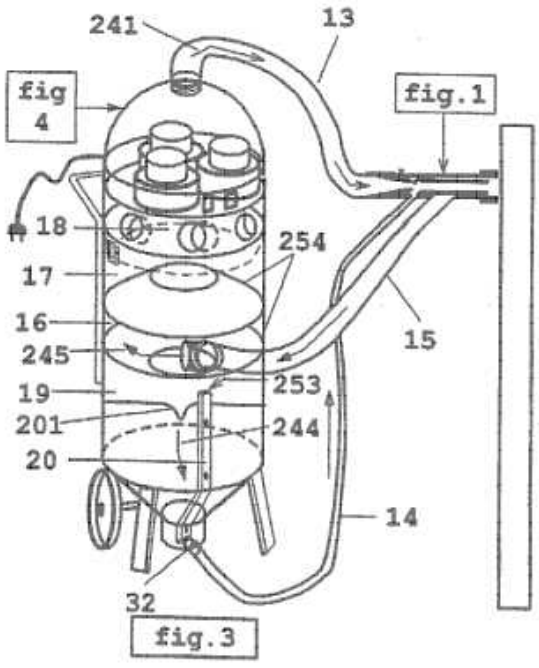

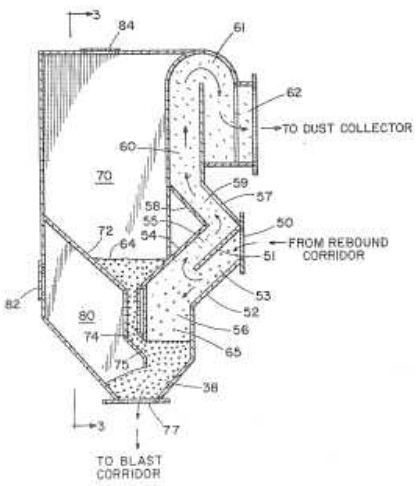

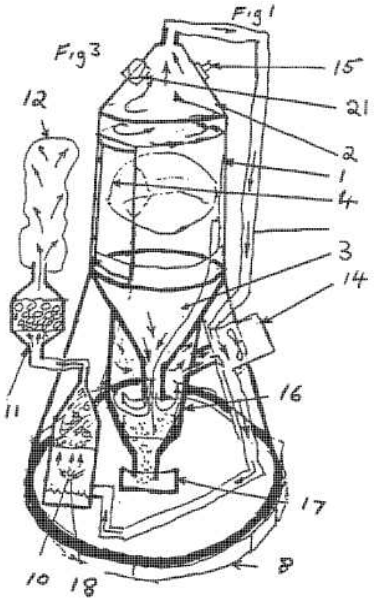

B24C 11/00

Selection of abrasive materials {or additives} for abrasive blasts (polishing compositions C09G)

Definition statement

This place covers:

Example(s): WO20110052287, WO20090110231, US20060111023, JP57194878, US5344472, EP0798081.

[図1]

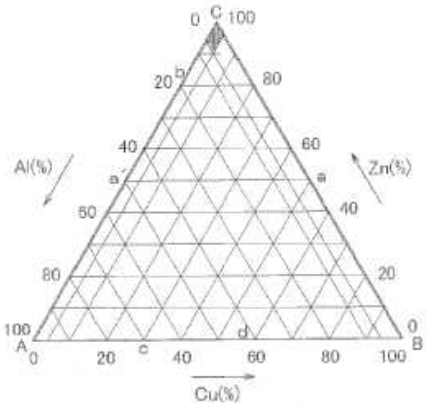

[図1]

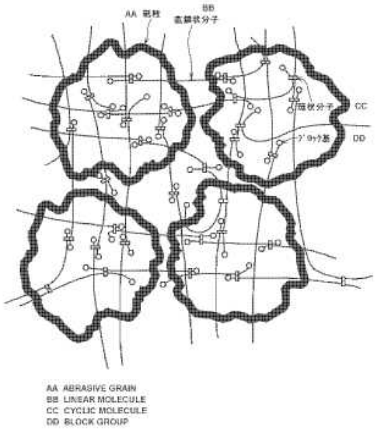

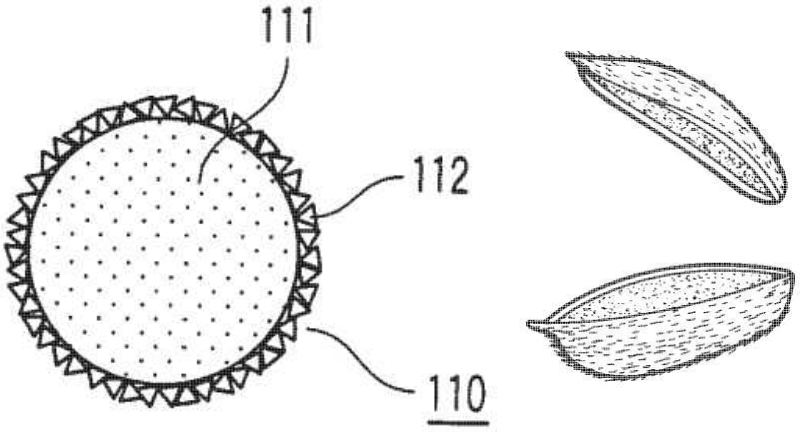

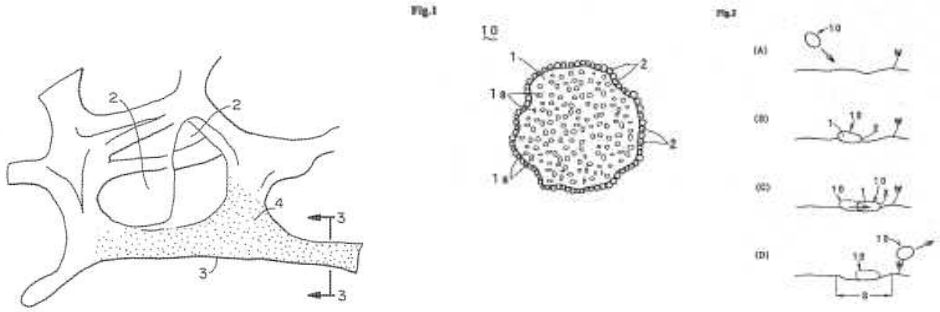

References

Limiting references

This place does not cover:

Selection of abrasive material which changes phase after treatment	B24C 1/003

B24C 11/005

{of additives, e.g. anti-corrosive or disinfecting agents in solid, liquid or gaseous form}

Definition statement

This place covers:

Example(s): GB2403726, EP1422026.

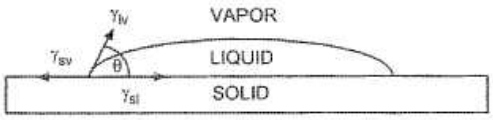
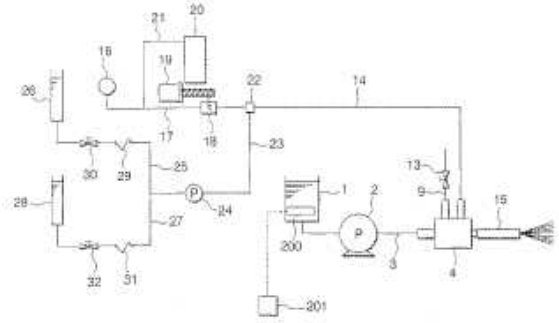
FIG. 1