B23Q

DETAILS, COMPONENTS, OR ACCESSORIES FOR MACHINE TOOLS, e.g. ARRANGEMENTS FOR COPYING OR CONTROLLING (tools of the kind used in lathes or boring machines B23B 27/00); MACHINE TOOLS IN GENERAL CHARACTERISED BY THE CONSTRUCTION OF PARTICULAR DETAILS OR COMPONENTS; COMBINATIONS OR ASSOCIATIONS OF METAL-WORKING MACHINES, NOT DIRECTED TO A PARTICULAR RESULT

Definition statement

This place covers:

General components that are used in any kind of machine tool, such as machine beds, feeding devices, workpiece holding means, workpiece conveying means, tool changing means, chip evacuating means, etc...

Machine configurations combining different kinds of machining operations, such as drilling, milling, turning, or cutting, e.g. sawing.

Relationships with other classification places

In the subclass B23Q, a machine tool is considered to be a mechanical working machine that removes material from a workpiece with a mechanical cutting edge to perform a shaping operation, essentially through drilling, milling, turning, or cutting, e.g. sawing.

B23Q is in general related to machine tools in the sense of the wording as being referred to above, not related to a particular result. There are, however, subclasses that are specially dedicated to specific machining techniques and their corresponding equipment or methods. Classification is done in the specific subclasses and not in B23Q, if the process or apparatus is fully covered in said specific subclasses.

B21 deals with mechanical working of metal without removing material.

B23B is the subclass for machines or components dedicated to turning or boring operations. In particular, group B23B 31/00 relates to chucks and group B23B 27/00 to tools for turning or boring machines. B23C is the subclass for milling, B23D for slotting or sawing, B23F for making gears, B23G for thread cutting, B23H for electro discharge machining, B23K for welding, B24 for grinding or polishing.

B25B relates to clamps, vices or chucks as such, with no special relation to a specific configuration of a machine tool. B25J deals with manipulators.

The subclasses B25C, B25D, B25F deal with portable power driven tools. B25H refers to workshop equipment, e.g. work benches. Subclass B26D relates to cutting and severing, B26F to perforating and punching.

Transport or storage devices not used in particular handling or treatment are covered by B65G.

F16 is a general class of mechanical components (such as linear guides and bearings) that are used in machine tools, as well as in other technical fields.

Group G05B 19/00 covers program control systems.

H01L 21/67 covers apparatus specially adapted for handling semiconductor or electric solid state devices, e.g. wafers, during manufacture or treatment thereof.

As guidance for finding the appropriate subclass, reference is made to the following flow chart:

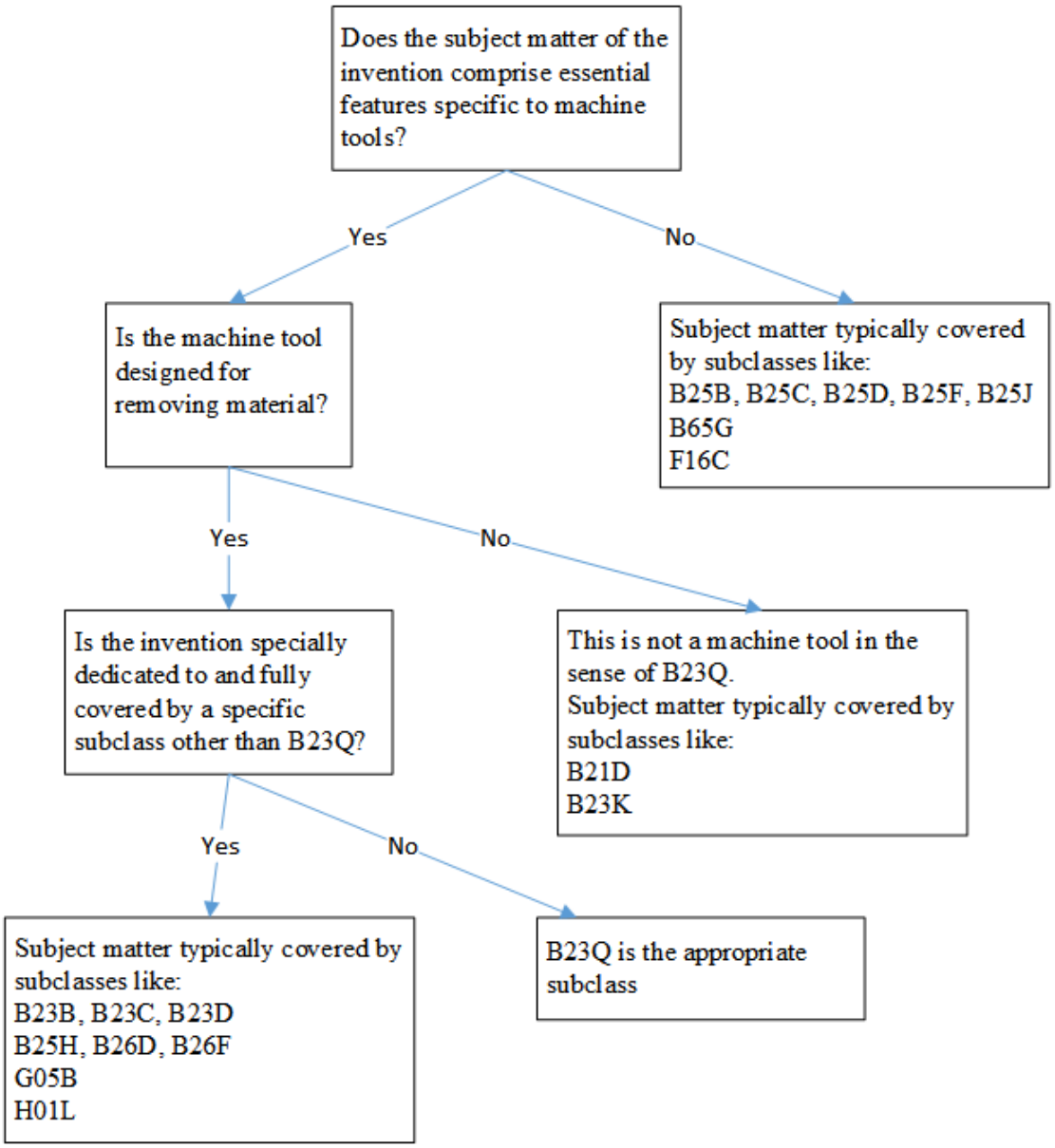

The preceding image includes references to B25B, B25C, B25D, B25F, B25J, B65G, F16C, B23Q, B21D, B23K, B23B, B23C, B23D, B25H, B26D, B26F, G05B, and H01L.

References

Limiting references

This place does not cover:

Tools of the kind used in lathes or boring machines	B23B 27/00

Glossary of terms

In this place, the following terms or expressions are used with the meaning indicated:

Machine tool	a mechanical working machine that removes material from a workpiece with a mechanical cutting edge to perform a shaping operation essentially through drilling, milling, turning, or cutting, e.g. sawing. The workpiece is generally made of metal, wood or plastic and is not a human body, food or cloth.
Controlling	influencing a variable in any way, e.g. changing its direction or its value (including changing it to or from zero), maintaining it constant, limiting its range of variation
Regulation	maintaining a variable automatically at a desired value or within a desired range of values. The desired value or range may be fixed, or manually varied, or may vary with time according to a predetermined "programme" or according to variation of another variable. Regulation is a form of control

Synonyms and Keywords

In patent documents, the following words/expressions are often used as synonyms:

- "automatic control" and" regulation"

B23Q 1/00

Members which are comprised in the general build-up of a form of machine, particularly relatively large fixed members (B23Q 37/00 takes precedence {; positioning supports for measuring arrangements G01B 5/0004; motorised alignment for optical elements G02B 7/005; handling of mask or wafer G03F 7/70691; adjusting or compensating devices for optical apparatuses G12B 5/00; piezoelectric or electrostrictive positioners H01L 41/09})

Definition statement

This place covers:

Features relating to the transfer of energy (mechanical, hydraulic or pneumatic) or signals in the machine tool.

Features relating to the bed or frame of the machine tool, spatial disposition of the linear guides, degrees of freedom of the tool or workpiece.

Features of the structure supporting the workpiece.

Means for guiding or stopping the movement of slides or spindles carrying the tool or the workpiece.

Relationships with other classification places

The groups B23Q 1/48 - B23Q 1/62 do not cover parallel kinematic structures as such, without special application in a machine tool, which is covered by B25J 9/00, B25J 17/00.

References

Limiting references

This place does not cover:

Members which are comprised in the general build-up of a form of machine, whereby said machine is a metal-working machines, or constructional combinations thereof, built-up from units designed so that at least some of the units can form parts of different machines or combinations	B23Q 37/00
Positioning supports for measuring arrangements	G01B 5/0004
Motorised alignment for optical elements	G02B 7/005
Handling of mask or wafer	G03F 7/70691
Adjusting or compensating devices for optical apparatuses	G12B 5/00
Piezoelectric or electrostrictive positioners	H01L 41/09

Special rules of classification

B23Q 1/48 - B23Q 1/62

The following table summarises the content of the groups, wherein

P means a purely translational movement along an axis (Prismatic)

R means a purely rotational movement around an axis

A means a perpendicular relationship between two consecutive moving axes

E means a parallel relationship between two consecutive moving axes

I means a 45° inclination between two consecutive moving axes

O means other relative orientation between two consecutive moving axes.

The machines are classed according to their axis configuration, starting from the bed (fixed portion) and going towards the last moving portion (usually the tool or the workpiece, or a spindle or a supporting surface for a workpiece).

The rotation of the cutting tool in the spindle (milling, drilling, etc.) is not considered here as a rotational movement R.

To illustrate the meaning of the symbols P, R, A, E, the drawings below indicate the relation between the symbol(s) and the actual movement:

Group	Content (Comments)
B23Q 1/48	R and P
B23Q 1/4804	RAP
B23Q 1/4809	RAPAR
B23Q 1/4814	RAPER
B23Q 1/4819	RAPAP
B23Q 1/4823	RAPEP
B23Q 1/4828	REP
B23Q 1/4833	REPAR

B23Q 1/4838	REPER
B23Q 1/4842	REPER
B23Q 1/4847	REPEP
B23Q 1/4852	PAR
B23Q 1/4857	PARAR
B23Q 1/4861	PARER
B23Q 1/4866	PARAP
B23Q 1/4871	PAREP
B23Q 1/4876	PER
B23Q 1/488	PERAR
B23Q 1/4885	PERER
B23Q 1/489	PERAP
B23Q 1/4895	PEREP
B23Q 1/50	R and R
B23Q 1/52	R
B23Q 1/522	R’ (Rotation axis is perpendicular to the supporting surface)
B23Q 1/525	R’’ (Rotation axis is parallel to the supporting surface)
B23Q 1/527	R’’’ (Using a ring or tube structure where the workpiece is fixed coaxially to its rotating axis.Related group for welding: B23K 37/0452)
B23Q 1/54	ROR,RIR
B23Q 1/5406	RAR
B23Q 1/5412	RARAR
B23Q 1/5418	RARER
B23Q 1/5425	RARAP
B23Q 1/5431	RAREP
B23Q 1/5437	RAR' (The last rotation of the supporting surface is perpendicular to the surface on which the last rotation is mounted to)
B23Q 1/5443	RAR" (The last rotation of the supporting surface is parallel to the surface on which the last rotation is mounted to)
B23Q 1/545	R and R w. spherical joint (At least 2 degrees of freedom in rotation, using a spherical surface joint)
B23Q 1/5456	joint and additional rotation (- Parallel kinematic structures, using spherical surface joints or other kind of joints, where the movement is induced by a rotating element (EP1529597).- Structures using a spherical surface joint, and comprising an additional dof in rotation (US1,927,675))

B23Q 1/5462	joint and additional translation (- Parallel kinematic structures, using spherical surface joints or other kind of joints, where the movement is induced by a sliding/ translating element (WO2005/120780) or by a telescopic element (WO2006/054935).- Structures using a spherical surface joint, and comprising an additional dof in translation (US5,544,968)).
B23Q 1/5468	RER
B23Q 1/5475	REREAR
B23Q 1/5481	RERER
B23Q 1/5487	RERAP
B23Q 1/5493	REREP
B23Q 1/56	P and P
B23Q 1/58	P
B23Q 1/585	P' (Translation perpendicular to the working/supporting surface)
B23Q 1/60	POP,PIP
B23Q 1/601	PEP
B23Q 1/603	PEPAR
B23Q 1/605	PEPER
B23Q 1/606	PEPAP
B23Q 1/608	PEPEP
B23Q 1/62	PAP (Use this group when the perpendicular axes are not piled, that is that both axes are at a same level (not one on top of the other; JP3234488))
B23Q 1/621	PAP
B23Q 1/623	PAPAR
B23Q 1/625	PAPER
B23Q 1/626	PAPAP
B23Q 1/628	PAPEP

Further details of subgroups:

B23Q 1/0054

Means for adjusting height or inclination of the machine on the floor or on a support surface.

B23Q 1/0063

Means for clamping pallets or similar exchangeable parts in a fixed place on the machine, usually engaging a male and a female part (e.g. "quick clamping cylinder").

B23Q 1/01

Special features of the frame, the bed, the portal of the machine, or the arrangement of the ways (linear guides) on the machine.

Machines where a portal, bridge or gantry is an important feature are classified in B23Q 1/012.

B23Q 1/25

Inventions concerning the kinematical structure of the machine tool: how the movement is guided, number and relative arrangement of the axes.

B23Q 1/703

Inventions relating to the extension of a tool holder or a tool.

B23Q 1/0009

{Energy-transferring means or control lines for movable machine parts; Control panels or boxes; Control parts (control handles for driving or feeding mechanisms B23Q 5/54)}

Definition statement

This place covers:

Means for transferring energy (electrical, hydraulic or pneumatic) or signals through moving parts of the machine.

References

Limiting references

This place does not cover:

Devices for coolant flowing through the spindle	B23Q 11/1015
Rotary joints for coolant through the spindle	B23Q 11/103

B23Q 1/03

Stationary work or tool supports (B23Q 1/70 takes precedence; auxiliary tables B23Q 1/74; tailstocks B23B 23/00)

Definition statement

This place covers:

Mostly workpiece supports for specially shaped workpieces (large or flexible) or variety of workpiece shapes or special cutting applications requiring special features of the workpiece support.

References

Limiting references

This place does not cover:

Vices composed of a plurality of parts adapting to the shape of the workpiece	B25B 1/2421
Holders for printed circuit boards	H05K 13/0069

B23Q 1/48

with sliding pairs and rotating pairs (B23Q 1/46 takes precedence)

References

Limiting references

This place does not cover:

Movable or adjustable work or tool supports with sliding pairs and rotating pairs, whereby particular mechanisms with screw pairs are being used	B23Q 1/46

Special rules of classification

See table provided under B23Q 1/00 for summary of kinematic connections

B23Q 1/50

with rotating pairs only, {the rotating pairs being the first two elements of the mechanism}

Special rules of classification

See table provided under B23Q 1/00 for summary of kinematic connections.

B23Q 1/56

with sliding pairs only, {the sliding pairs being the first two elements of the mechanism}

Special rules of classification

See table provided under B23Q 1/00 for summary of kinematic connections.

B23Q 1/70

Stationary or movable members for carrying working-spindles for attachment of tools or work {(B23Q 1/01 takes precedence; designed to be moved by using particular mechanisms B23Q 1/44)}

Definition statement

This place covers:

Inventions relating to the bearings configuration or the housing of a working spindle.

References

Informative references

Attention is drawn to the following places, which may be of interest for search:

Grinding spindles with magnetic or electromagnetic bearings	B24B 41/044
General features relating to bearings or other spindles	F16C

B23Q 3/00

Devices holding, supporting, or positioning work or tools, of a kind normally removable from the machine (work-tables or other parts, e.g. faceplates, normally not incorporating means for securing work B23Q 1/00; automatic position control B23Q 15/00 {; food cutting boards A47J 47/00; workpiece support for dies B21D 37/02}; rotary tool heads for turning-machines B23B 3/24, B23B 3/26; non-driven tool holders B23B 29/00; general features of turrets B23B 29/24 {; drawbars in spindles B23B 31/261; for electrical discharge machining B23H 11/003; for welding B23K 37/04; means for securing grinding wheels B24B 45/00; mountings for abrasive wheels B24D 5/16}; tools or bench devices for fastening, connecting, disengaging or holding B25B {; chucks for percussive tools B25D 17/084; work benches for manual work B25H 1/00; devices for securing circular saw blades B27B 5/32; for assembling or manufacturing aircrafts B64F 5/0009; for holding semiconductors or wafers H01L 21/67; devices for holding circuit boards H05K 13/0061})

Definition statement

This place covers:

Guides or fences for guiding the movement of workpieces (B23Q 3/005).

Devices for tightly holding a workpiece on a table or support in order to machine it (B23Q 3/06 - B23Q 3/08).

Any holding, supporting or positioning device for a workpiece, directed to the machining of the workpiece.

Arrangements for the automatic insertion or removal of a cutting tool from the spindle or tool holder of the machine tool (B23Q 3/155).

Arrangements for replacing, inserting or removing multi-spindle head modules:

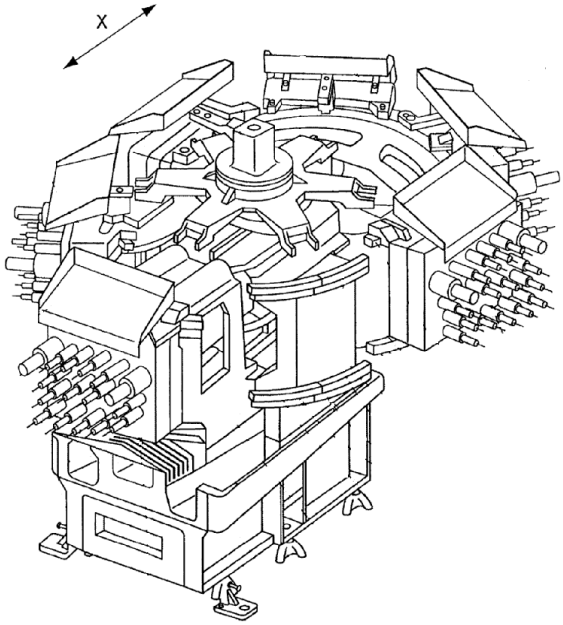

Illustrative document B23Q 2003/1558

References

Limiting references

This place does not cover:

Work-tables or other parts, e.g. faceplates, normally not incorporating means for securing work	B23Q 1/00
Automatic position control	B23Q 15/00
Food cutting boards	A47J 47/00
Workpiece support for dies	B21D 37/02
Rotary tool heads for turning-machines	B23B 3/24, B23B 3/26
Non-driven tool holders	B23B 29/00
General features of turrets	B23B 29/24
Drawbars in spindles	B23B 31/261
For electrical discharge machining	B23H 11/003
For welding	B23K 37/04
Means for securing grinding wheels	B24B 45/00
Mountings for abrasive wheels	B24D 5/16
Clamps, vices or chucks as such, with no special relation to a specific configuration of a machine tool.	B25B
Chucks for percusive tools	B25D 17/084

Work benches for manual work	B25H 1/00
Devices for securing circular saw blades	B27B 5/32
For assembling or manufacturing aircrafts	B64F 5/0009
For holding semiconductors or wafers	H01L 21/67
Devices for holding circuit boards	H05K 13/0061

Special rules of classification

While the classes B23Q 3/1572 - B23Q 3/15766 are subclasses of B23Q 3/15713, they shall be also used for devices with direct insertion of the tool in the spindle (B23Q 3/15706).

The documents shall thus receive a classification symbol in one of the B23Q 3/15706 or B23Q 3/15713 groups and eventually one of the groups B23Q 3/1572 - B23Q 3/15766.

Arrangements for automatic insertion or removal of tools are classified in the appropriate entries foreseen in the groups B23Q 3/155 through B23Q 3/15793, and when comprising guards, fences, doors or any other kind of housing for protection of some parts of said arrangements, then additional classification in B23Q 11/08 is required.

B23Q 3/002

{Means to press a workpiece against a guide}

Definition statement

This place covers:

Means for pressing a workpiece against a guide, fence or table. Usually mounted on a structure over the machine table or on the spindle head. If the means is mounted directly on the table and presses the workpiece downwards against the table, then classify in B23Q 3/069.

References

Limiting references

This place does not cover:

Pressure rollers for feeding timber in sawing machines	B27B 25/02

B23Q 3/005

{Guides for workpieces}

Definition statement

This place covers:

Guides or fences for workpieces.

References

Limiting references

This place does not cover:

Devices for conveying work in sawing machines	B23D 47/042
Guide fences for sawing machines	B27B 27/00
Guide fences for wood working	B27C 5/04

B23Q 3/155

Arrangements for automatic insertion or removal of tools {, e.g. combined with manual handling (B23Q 7/046 takes precedence)}

References

Limiting references

This place does not cover:

handling workpieces or tools by means of grippers specially adapted for use in connection with arrangements for automatic insertion or removal of tools	B23Q 7/046

B23Q 3/15536

{Non-rotary fixed racks}

References

Informative references

Attention is drawn to the following places, which may be of interest for search:

Arrangements for automatic insertion or removal of rotary tools by a transfer device taking a single tool from a storage device comprising rotating or circulating storage means and inserting it into a spindle	B23Q 3/1572

B23Q 3/15553

{Tensioning devices or tool holders, e.g. grippers (driving working-spindles and adjusting or stopping them in a predetermined angular position B23Q 5/20; securing milling cutters to the driving spindle in a given angular position B23C 5/26)}

Definition statement

This place covers:

Devices for holding the tools in the storage means (grippers) or special features relating to the tool holder in the spindle for the automatic tool exchange.

References

Limiting references

This place does not cover:

Driving working-spindles and adjusting or stopping them in a predetermined angular position	B23Q 5/20
Securing milling cutters to the driving spindle in a given angular position	B23C 5/26

B23Q 5/00

Driving or feeding mechanisms; Control arrangements therefor (automatic control B23Q 15/00; copying B23Q 33/00, B23Q 35/00; specially adapted for boring or drilling machines B23B 39/10, B23B 47/00; {numerical programme-control of machine tools G05B 19/18})

Definition statement

This place covers:

Mechanisms for producing a rotational or reciprocating movement (driving) or translational movement (feeding) of a workpiece or tool, in a machine tool.

References

Limiting references

This place does not cover:

Vibratory toolholders	B23B 29/125
Ultrasonic boring	B23B 37/00
Gearings, speed selectors for power driven hand tools	B25F 5/001
Ultrasonic cutting of gems, jewels	B28D 5/047

Informative references

Attention is drawn to the following places, which may be of interest for search:

General features of fluid pressure drives accelerating or decelerating the stroke	F15B 15/02
General mechanisms or mechanical components not specific to a machine tool.	F16H
General mechanical drives with varying speed ratio	F16H 3/00
Cam or ballscrew mechanisms as such	F16H 25/00
Linears motors as such	H02K 41/00

Special rules of classification

Further details of subgroups:

B23Q 5/10

Motorspindles.

B23Q 5/28

Machine tools with special configurations or features of linear motors.

B23Q 7/00

Arrangements for handling work specially combined with or arranged in, or specially adapted for use in connection with, machine tools, e.g. for conveying, loading, positioning, discharging, sorting (incorporated in working-spindles B23B 13/00)

Definition statement

This place covers:

Arrangements concerning the conveying of workpieces between machine tools or to the loading/ unloading of machine tools.

The classes correspond either to the type of conveying means used B23Q 7/001 - B23Q 7/08 or to the relationship between the machining stations of a production line that are linked by conveying means B23Q 7/14 - B23Q 7/1421.

References

Limiting references

This place does not cover:

Indexing rotating tables as such	B23Q 16/025
Simultaneous operations on different machining stations, incorporated in a same machine. Transfer of the workpiece within such a machine.	B23Q 39/04
Handling sheet metal, metal tubes or metal profiles	B21D 43/00
Conveying bar stock in a lathe	B23B 13/00
Vacuum work grippers	B25B 11/00
Programme-controlled manipulators	B25J 9/00
General aspects of gripping heads	B25J 15/00
Feed chains for timber	B27B 25/04
Pallets for loads to be lifted	B65D 19/00
Separating articles from piles	B65H 3/00

Informative references

Attention is drawn to the following places, which may be of interest for search:

General aspects of article conveyors	B65G

Special rules of classification

If the work is carried on a pallet or cart loosely mounted on a conveyor means, the document should be classified in B23Q 7/1426 or subclasses of it.

The classification of new documents in groups B23Q 7/14 - B23Q 7/1421 should be avoided, since the classification in B23Q 39/00 or B23Q 41/00 is preferred.

Further details of subgroups:

B23Q 7/007

Machining of the workpiece during its conveying (GB2273077).

B23Q 7/008

Devices for catching a finished workpiece (DE202006003047U).

B23Q 7/045

Arrangements for gripping a workpiece by using the tool holder means (EP1637279) or mounted on the tool spindle (EP2253422).

B23Q 7/1405

The workpieces are consecutively conveyed to the next working device, the working devices being placed in series (linearly or not) corresponding to the the sequence of working.

B23Q 7/141

A long workpiece is axially transported and one end of it is machined and cut from the rest of the workpiece.

B23Q 9/00

Arrangements for supporting or guiding portable metal-working machines or apparatus ({turning machine for reconditioning wheel sets without removing same from vehicle B23B 5/32;} for tapping pipes {B23B 41/00, F16L 41/04}; specially designed for drilling {B23B 45/00, B25H 1/0021})

Definition statement

This place covers:

Arrangements for supporting, fixing or guiding a portable machine tool in combination with guide means that position the machine tool relative to the workpiece.

Machine tools that are mounted on the surface of large workpieces (such as aircrafts), or that are fixed to a large workpiece with a special profile (such as beam or tube).

Machines that are automatically guided by means supported directly on the workpiece, e.g. via an automatic cart or crawler (B23Q 9/0007).

Machines that are manually guided by means supported directly on the workpiece (B23Q 9/0014).

References

Limiting references

This place does not cover:

Turning machine for reconditioning wheel sets without removing same from the vehicle	B23B 5/32
For tapping pipes	B23B 41/00, F16L 41/04
Hand-held or like portable drilling machines, e.g. drill guns; Equipment therefor	B23B 45/00
Tables for sawing machines	B23D 47/025
Portable stands or supports for positioning portable tools or work to be operated on thereby	B25H 1/0078
Portable hand-operated wood-milling machines; Routers	B27C 5/10

Informative references

Attention is drawn to the following places, which may be of interest for search:

Portable hand-operated wood-milling machines; Routers	B27C 5/10

Special rules of classification

Further details of subgroups:

B23Q 9/0007

Automatic machine usually used for machining large workpieces which require high machining accuracy (e.g. aeronautic components, pipes, or profiles), wherein the machine or the guide means are supported by the workpiece. If the guide means form part of the machine, then classify also in B23Q 9/0028 or B23Q 9/0035; if they are independent from the machine and fixed on the workpiece, then classify also in B23Q 9/0042 through B23Q 9/0057.

B23Q 9/0014

Smaller portable machine that is manually guided by the operator, wherein the machine or the guide means are supported by the workpiece. If the guide means form part of the machine, then classify also in B23Q 9/0028 or B23Q 9/0035; if they are independent from the machine and fixed on the workpiece, then classify also in B23Q 9/0042 through B23Q 9/0057.

B23Q 9/0064

The machine or the guide means are supported by a support independent from the workpiece. If the guide means form part of the machine, then classify in B23Q 9/0071; if they are independent from the machine and fixed to the support, then classify in B23Q 9/0078.

B23Q 9/02

This class takes precedence over B23Q 9/0014.

Here are classified machines that are secured to workpieces with a special shape such as beams or tubes, to which the securing means are specially adapted. If the workpiece is secured on the surface of the workpiece with standard fixing means, then classify in B23Q 9/0014.

Glossary of terms

In this place, the following terms or expressions are used with the meaning indicated:

Portable machine tool	A machine that is brought to the workpiece. Either the workpiece is very large (aircraft fuselage, long beams or tubes) or the machine is very light and easy to transport.

B23Q 11/00

Accessories fitted to machine tools for keeping tools or parts of the machine in good working condition or for cooling work {(accessories specially designed for sawing machines or sawing devices B23D 59/00)}; Safety devices specially combined with or arranged in, or specially adapted for use in connection with, machine tools (in respect of boring or drilling machines B23B 47/32 takes precedence; safety devices in general F16P)

Definition statement

This place covers:

Arrangements reducing or eliminating thermal influences in the machining accuracy (B23Q 11/0003).

Arrangements reducing or eliminating the influence of gravity on the machine (B23Q 11/001).

Arrangements reducing or eliminating undesired vibrations in parts of the machine (B23Q 11/0032).

Arrangements for removing or evacuating from the working area cutting chips produced during machining (B23Q 11/0042).

Arrangements protecting the operator from possible injuries or noise (B23Q 11/0078).

Arrangements for removing scrap from the teeth of cutting devices (B23Q 11/02).

Arrangements for preventing overload of tools for preventing their damage (B23Q 11/04).

Safety devices for specially adapted for disc shaped cutters like saws (B23Q 11/06).

Coverings for protecting parts of machine tools from dust, chips, cutting fluids, etc or for protecting the operator from flying cutting chips, centrifugated tools or cutting fluid (B23Q 11/08).

Arrangements for cooling or lubricating the interface between the tool and the workpiece or the tool itself. Special cooling or lubricating strategies, coolant nozzles, cooling liquid filtration systems (B23Q 11/10).

Arrangements for cooling or lubricating other parts of the machine than the tool and workpiece (bearings, spindle, motors, ballscrew, linear guides, frame (B23Q 11/12).

Arrangements for maintaining a constant temperature in parts of the machine tool, meaning the use of a certain temperature control strategy (B23Q 11/14).

References

Limiting references

This place does not cover:

Preventing escape of dirt or fumes from the working area; suction systems	B08B 15/00

Informative references

Attention is drawn to the following places, which may be of interest for search:

Safety devices in general, not specially designed for a machine tool	F16P

Special rules of classification

Further details of subgroups:

B23Q 11/0053

Constructional or design measures intended to facilitate the evacuation of the chips by their own weight.

B23Q 11/06

This class should not be used if a more specific class in another field exists (see classes cited in B23Q 11/0078).

B23Q 11/1069

Systems for filtering the cutting liquid for separating the chips from the liquid.

B23Q 11/1076

Nozzle suited to be adapted to different tools, so that its position or the direction of the cutting liquid jet can be adjusted to the geometry of the tool.

B23Q 11/1084

General features relating to the distribution of coolant to the machine tools, coolant dispensing devices independent of the machine, etc.

B23Q 11/0003

{Arrangements for preventing undesired thermal effects on tools or parts of the machine (B23Q 11/10, B23Q 11/12 and B23Q 11/14 take precedence)}

References

Limiting references

This place does not cover:

Automatic compensation of tool deflection due to temperature or force	B23Q 15/18

Special rules of classification

Constructional or design measures intended to prevent negative influences of varying temperatures are classified in B23Q 11/0003.

If thermal dilation occurs, but measures are taken to compensate for it, then classify in B23Q 11/0007 (e.g. EP1989019).

B23Q 11/001

{Arrangements compensating weight or flexion on parts of the machine (adjustment of the fluid layer in fluid bearings or cushions depending upon the position of a weight B23Q 1/385)}

References

Limiting references

This place does not cover:

Automatic compensation of tool deflection due to temperature or force	B23Q 15/18
Tool balancers for portable tools	B25H 1/0028

B23Q 11/0032

{Arrangements for preventing or isolating vibrations in parts of the machine (B23B 29/022, B23D 47/005 take precedence; means for damping or suppressing vibrations, in general F16F)}

References

Limiting references

This place does not cover:

Detection or control of chatter	B23Q 17/0976
Boring bars with vibration reducing means	B23B 29/022
Vibration damping in sawing machines	B23D 47/005

Informative references

Attention is drawn to the following places, which may be of interest for search:

Counterweights for suppressing vibrations in general	F16F 15/28
Numerical control for compensation of load, inertia or temperature	G05B 19/404

B23Q 11/0057

{outside the working area}

Definition statement

This place covers:

Chip collectors or chip conveyors placed under or next to a machine tool, in order to catch and convey the chips from the working area to the outside.

If the invention is focussed on the separating of the chips from the coolant, then classify rather in B23Q 11/1069 (filtration).

References

Limiting references

This place does not cover:

Removing or collecting chips in sawing machines	B23D 59/006
Dust removing means in manipulators	B25J 19/0058
Means for removing cut-out material or waste in punching or perforating machines	B26D 7/18
Arrangements for removing bark-zones, chips, waste, or dust, specially designed for use in connection with wood-working machines	B27G 3/00

Informative references

Attention is drawn to the following places, which may be of interest for search:

Cleaning workpieces in general	B08B 3/00
Conveying materials in general, other than cutting chips	B65G 53/00

B23Q 11/0078

{Safety devices protecting the operator, e.g. against accident or noise (protecting the machine tool B23Q 5/58; protecting people, in general F16P 1/00, F16P 3/00)}

References

Limiting references

This place does not cover:

Protective coverings placed between the working area and the operator	B23Q 11/0891
Chambers provided with manipulation devices	B25J 21/00
Devices for braking the circular saw blade or the saw spindle	B27B 5/38
Devices for arresting movement of the saw chain	B27B 17/083
Safety guards for wood saws	B27G 19/02

B23Q 11/08

Protective coverings for parts of machine tools; Splash guards

References

Limiting references

This place does not cover:

Tool covers	B23Q 13/00
Arrangements for covering or protecting the waysfixed to the carriage or bearing body movable along the guide rail	F16C 29/084

Informative references

Attention is drawn to the following places, which may be of interest for search:

Screening or protective devices in general	E06B 9/00
Bellows in general	F16J 3/04

B23Q 11/10

Arrangements for cooling or lubricating tools or work (incorporated in tools, see the relevant subclass for the tool, {e.g. B23B 27/10, B23B 51/06, B23C 5/28, B23D 77/006; for circular saw blades B23D 59/02, for cooling grinding surfaces B24B 55/02})

Definition statement

This place covers:

If the invention concerns a specific kind of tool with features concerning its cooling or lubricating, it should be classified in the corresponding class of the tool.

References

Informative references

Attention is drawn to the following places, which may be of interest for search:

Feed or discharge mechanisms for settling tanks (sedimentation)	B01D 21/245
Filters in general	B01D 35/00, B01D 36/00

B23Q 13/00

Equipment for use with tools or cutters when not in operation, e.g. protectors for storage {(B26B 29/00 takes precedence)}

Definition statement

This place covers:

Equipment used in combination with a tool when the tool is not in operation, e.g. tool covers avoiding injury of an operator or damage of the tool.

B23Q 15/00

Automatic control or regulation of feed movement, cutting velocity or position of tool or work (programme-control G05B 19/00, e.g. numerical programme-control G05B 19/18)

Definition statement

This place covers:

Control while the tool acts upon the workpiece. Control before or after the tool acts upon the workpiece.

References

Limiting references

This place does not cover:

Control of manipulators	B25J 9/16
Microprocessor Control of machines	G05B 19/042
Numerical Control of machine-tools	G05B 19/18

B23Q 16/00

Equipment for precise positioning of tool or work into particular locations not otherwise provided for (automatic control or regulation of position of tool or work B23Q 15/22; arrangements for indicating or measuring existing or desired position of tool or work B23Q 17/22)

Definition statement

This place covers:

Mechanical stops for positively defining a position of a part of the machine tool by abutment against the stop (B23Q 16/001 - B23Q 16/002).

Mechanisms of peck feed drills for periodically retracting the drill from the bored hole and advancing it again to the previous working position. Other mechanisms allowing to bring the tool back to a previous working position after an interruption (B23Q 16/003).

Equipment for measuring the distance just before contact or detecting the contact between two machine parts (B23Q 16/005).

References

Limiting references

This place does not cover:

Detection of contact between tool and workpiece	B23Q 17/2241

Special rules of classification

B23Q 16/001-B23Q 16/002

If the stop is in a hollow spindle, then classify in B23Q 16/002

B23Q 16/04-B23Q 16/08

If the relative movement is locked by an intermediate member mounted on the support and insertable in an aperture of the indexing part, then classify in B23Q 16/04-B23Q 16/065.

If the relative movement is stopped by a sort of clamping means or meshing means (hirth ring), then classify in B23Q 16/08-B23Q 16/102.

If the indexing movement is a rotation and the clamping means is a disc or a drum brake, then classify in B23Q 16/105 or B23Q 16/107 respectively.

B23Q 16/04-B23Q 16/08

These classes concern details for locking or clamping the indexing part in the indexing position, so that it does not move relative to the fixed support.

If the relative movement is locked by an intermediate member mounted on the support and insertable in an aperture of the indexing part, then classify in

B23Q 16/04- B23Q 16/065

If the relative movement is stopped by a sort of clamping means or meshing means (hirth ring), then classify in B23Q 16/08-B23Q 16/102.

If the indexing movement is a rotation and the clamping means is a disc or a drum brake, then classify in B23Q 16/105 or B23Q 16/107 respectively.

Further details of subgroups:

B23Q 16/006

See, for example, US-5,765,448.

Device consisting of a plurality of abutting stops at different positions or of different lengths, in a common carrier, used for detemining a position or length of a machine part.

B23Q 16/007

Positive angle adjustment of a pivotable table. See, for example, US-3,861,088.

B23Q 16/02

Equipment for bringing a linearly or rotatably moving part to one of a plurality of consecutive predefined indexing positions.

B23Q 16/021

Details concerning the elements that assure the accurate positioning at the indexing point.

B23Q 16/022

Details concerning the mechanism that produces the movement from an indexing point to the next.

B23Q 16/027

Means for varying the distance between two consecutive indexing points or between various consecutive machine parts separated from each other by the same distance.

B23Q 16/028

Additional means for adjusting the position of the indexing part around the normal indexing position.

Glossary of terms

In this place, the following terms or expressions are used with the meaning indicated:

Reciprocating or oscillating movement	Linear movement
Continuous movement or continuous drive	Rotary movement or rotary drive

B23Q 17/00

Arrangements for {observing,} indicating or measuring on machine tools (for automatic control or regulation of feed movement, cutting velocity or position of tool or work B23Q 15/00)

Definition statement

This place covers:

Arrangements for measuring any parameters, such as tool or workpiece dimensions, vibrations, positions of machine parts, etc.

Arrangements for detecting any machine condition, such as "tool or workpiece are safely clamped", "the machine parts are in a good state", for managing the life of the tools or other parts of the machine, etc.

Special rules of classification

B23Q 17/0966 - B23Q 17/0971

If the amplitude of a force is analysed in the time domain, then classify in B23Q 17/0966.

If the force is analysed in the frequence domain (vibration), then classify in B23Q 17/0971.

B23Q 17/2216-B23Q 17/2225

The documents should rather be classified in B23Q 17/0914-B23Q 17/0947 as far as possible.

B23Q 17/2233

If the referencing is done by contacting the workpiece with the tool, then classify in B23Q 17/2241.

Further details of subgroups:

B23Q 17/002

Controlling whether a tool or workpiece holder is correctly holding (correct position or correct holding force).

Depending on whether the parameter controlled is a position of a part or a force, pressure or deformation acting on a part, the document should be classified in B23Q 17/003 or B23Q 17/005 respectively.

B23Q 17/006

As opposed to B23Q 17/002, this class deals only with the detecting of the presence or absence of a tool or workpiece in its holder, and not to the quality of the holding action.

B23Q 17/007

Controlling the right, smooth functioning of parts of the machine, except the tool. Details concerning life management of a specific part (how long can this part still work correctly before it must be replaced or maintained?) are classified in B23Q 17/008.

B23Q 17/099

Analysing the quality (dimensions, roughness, temperature, etc.) of the machined workpiece.

B23Q 17/12

Special details of arrangements for measuring vibrations in machine tools.

B23Q 17/22

Special arrangements in machine tools for measuring the position of the workpiece or the tool relative to the machine or relative to each other.

Arrangements for correcting position errors or for adjusting the tool and the workpiece relative to each other.

B23Q 17/2208

Arrangements for detecting or preventing collisions between parts (tool, workpiece, slides, etc.) of the machine tool.

B23Q 17/2216

Adjusting the tool into its holder or into the tool head, for example for correcting an eccentricity or an inclination error.

B23Q 17/2233

Arrangements for adjusting the position of the tool or the spindle relative to the workpiece or to a reference part in the machine.

B23Q 17/24

Arrangements using optical devices (lenses, electromagnetic waves, radar, cameras, etc.) for measuring, detecting a certain machine state, or facilitating the working in a machine tool.

B23Q 17/09

for indicating or measuring cutting pressure or {for determining} cutting-tool condition, e.g. cutting ability, load on tool (arrangements preventing overload of tools B23Q 11/04; devices for indicating failure of drills during boring B23B 49/00)

Definition statement

This place covers:

Details concerning the control of the condition of the tool (level of wear, broken tool, dimensions, temperature, machining forces, etc.). Depending on whether the control is performed before/after machining or during machining, classify in B23Q 17/0904 - B23Q 17/0947 or B23Q 17/0952 - B23Q 17/099 respectively.

References

Limiting references

This place does not cover:

Accessories for positioning, for tool-setting for measuring probes	G01B 21/047

B23Q 17/0919

{Arrangements for measuring or adjusting cutting-tool geometry in presetting devices}

Definition statement

This place covers:

The tool is measured in an apparatus (presetting device) independent from the machine tool.

References

Limiting references

This place does not cover:

Clamping a tool in a tool holder by heating and shrinking the holder (tool length setting device)	B23P 11/02

B23Q 17/20

for indicating or measuring workpiece characteristics, e.g. contour, dimension, hardness

Definition statement

This place covers:

Measurement of workpiece characteristics, in a machine tool or directly related to the functioning of the machine tool.

References

Informative references

Attention is drawn to the following places, which may be of interest for search:

Measuring instruments in general	G01B

B23Q 17/2414

{for indicating desired positions guiding the positioning of tools or workpieces (B25H 1/0092 takes precedence)}

Definition statement

This place covers:

Using light beams projected on the working area for helping the operator to guide the tool or workpiece to the desired target.

References

Limiting references

This place does not cover:

Optical guiding devices for hand tools	B25H 1/0092

B23Q 23/00

Arrangement for compensating for irregularities or wear, e.g. of ways, of setting mechanisms (automatic control B23Q 15/00)

Definition statement

This place covers:

Arrangements for compensating any irregularities, such as wear, in the functioning of the machine tool.

References

Informative references

Attention is drawn to the following places, which may be of interest for search:

Automatic control of parts of a machine tool	B23Q 15/00
Programme control systems	G05B 19/00

B23Q 27/00

Geometrical mechanisms for the production of work of particular shapes, not fully provided for in another subclass

Definition statement

This place covers:

Special machine configurations allowing to produce works of particular shape.

References

Limiting references

This place does not cover:

Grinding non circular cross sections	B24B 19/08
Numerical control for generating special surfaces	G05B 19/182

B23Q 33/00

Methods for copying

Definition statement

This place covers:

General methods for copying a shape.

This class is not used anymore for classifying. It contains some old documents that deal with the reproduction of a shape on a workpiece.

References

Limiting references

This place does not cover:

Tracing or scanning a model for preparing numerical control data	G05B 19/4207

B23Q 35/00

Control systems or devices for copying directly from a pattern or a master model; Devices for use in copying manually {(copy milling classified also in B27C 5/003)}

Definition statement

This place covers:

Arrangements allowing a tool to copy a pattern or model.

Arrangements allowing a cutting tool to machine a workpiece for reproducing the shape of a physical master model (e.g. a key). The shape of the master model is detected either with or without physical contact and the corresponding information is transferred to the axis of a machine tool.

References

Limiting references

This place does not cover:

Using a copying machine for making dental prostheses	A61C 13/0009

B23Q 37/00

Metal-working machines, or constructional combinations thereof, built-up from units designed so that at least some of the units can form parts of different machines or combinations; Units therefor in so far as the feature of interchangeability is important (features relating to particular metal-working operations, see the relevant subclass, e.g. B23P 23/00)

Definition statement

This place covers:

Machine tools made of special modules allowing the machine to be reconfigured.

Modules adapted to make reconfigurable machines.

Machines not made of modular elements but being convertible into different working configurations (e.g., from horizontally working into vertically working; B23Q 37/002).

B23Q 39/00

Metal-working machines incorporating a plurality of sub-assemblies, each capable of performing a metal-working operation (B23Q 33/00, B23P 23/00 take precedence; if the operations are similar and the kind of operation is essential, see the relevant subclass for the operation)

Definition statement

This place covers:

Machine tools made of a plurality of sub-assemblies, wherein each-subassembly can perform a machining operation, either simultaneously or consecutively, either on a same workpiece or not.

References

Limiting references

This place does not cover:

Turning-machines with two or more working-spindles	B23B 3/30

Special rules of classification

Further details of subgroups:

B23Q 39/02

There is a single operating station, i.e. either a single workholder for a plurality of toolheads (B23Q 39/021 - B23Q 39/027) or a plurality of workholders ready to be operated on by a single toolhead (B23Q 39/028).

B23Q 39/021 - B23Q 39/027

In these classes, "same working direction" means that the toolheads operate on the workpiece from the same side, with similar inclination of the tool. "Different working direction" means that the toolheads operate on the workpiece from different sides or with different inclination of the tool.

B23Q 39/04

Several workpieces are machined simultaneously at different stations by different tool heads.

B23Q 41/00

Combinations or associations of metal-working machines not directed to a particular result according to classes B21, B23, or B24 (B23Q 37/00, B23Q 39/00 take precedence; features relating to operations performed, if the different metal-working operations are of the same kind, see the subclass for the kind of operation, e.g. punching B21D, welding B23K, grinding B24B; features relating to technically specified combinations of different metal-working operations B23P 23/00)

Definition statement

This place covers:

Machining lines with a plurality of machining stations of different types, with a special arrangement or organisation of the machines, characterised not by the end product or the machining technology but by the relationship between the machines.

References

Limiting references

This place does not cover:

Advancing work in multistage presses	B21D 43/05
Assembly with two or more workstations	B23P 21/004
Total factory control	G05B 19/418

Informative references

Attention is drawn to the following places, which may be of interest for search:

Combinations of conveyors in general	B65G 37/02

Special rules of classification

Further details of subgroups:

B23Q 41/02

Details relating to the transfer of the work between the machines.

If the details correspond to a specific transfer device, then classify in the corresponding group in B23Q 7/00 - B23Q 7/103.

B23Q 41/04

Details relating to the relative spatial arrangements of the machines in the factory.

B23Q 41/06

Details relating to the organisation of the working of the machines or to the distribution or flow of the workpieces between the machines.

B23Q 41/08

General details relating to the maintenance of efficient working conditions in the machines, such as parts or tool wear control, checking of quality, optimisation of working conditions.