B23F

MAKING GEARS OR TOOTHED RACKS (by stamping B21D; by rolling B21H; by forging or pressing B21K; by casting B22; arrangements for copying or controlling B23Q; machines or devices for grinding or polishing, in general B24B)

Definition statement

This place covers:

Methods and machines specially designed to accurately produce the shapes of gears and other toothed members. Such shapes being essential for proper intermeshing of gearing (and toothed member) elements to ensure the required relative motions. The methods and machines use metal removing processes;

Tools which are specially adapted for use in machines for manufacturing toothed members;

Accessories and equipment for gear making machinery.

References

Limiting references

This place does not cover:

Making gears or toothed racks by stamping	B21D
Making gears or toothed racks by rolling	B21H
Making gears or toothed racks by forging or pressing	B21K
Making gears or toothed racks by casting	B22D
Making milling cutters by milling per se	B23C 3/36
Making milling cutters by multi-stage processes	B23P 15/34

Informative references

Attention is drawn to the following places, which may be of interest for search:

Details, components, or accessories for machine tools, in general	B23Q
Machines or devices for grinding or polishing, per se	B24B
Gears, per se	F16H
Profiles of toothed members	F16H 55/08

Glossary of terms

In this place, the following terms or expressions are used with the meaning indicated:

Terms relating to gear nomenclature in general are to be understood as defined by ANSI/AGMA 1012-G05

Gear teeth	In addition to the common meaning of gear teeth, it also covers the teeth or lobes of other accurately intermeshing members having relative movement of a similar kind, such as rotors of rotary pumps and blowers.

Gear cutting	Whilst "cutting" is generally used to refer to material removal using a geometrically defined cutting edge, in this subclass the term "gear cutting" also refers to material removal using geometrically undefined cutting edges, such as by grinding.
Profile	Profile may include the outline of both faces or only one face of a tooth, or the opposing faces of adjacent teeth.
Straight	Straight means that a tooth as a whole (ignoring any curvature of the tooth-face alone, e.g. crowning) is straight in the direction of its length. It accordingly includes the teeth of spur gears, helical gears and normal bevel gears.
Indexing	Indexing in general refers to the process of dividing the periphery of the workpiece into a number of discrete sections. In this subclass the sections are where the teeth are (or will be) formed and indexing refers to the relative angular movement between the workpiece and tool after cutting one tooth in order to allow cutting of the next tooth.
Continuous indexing	Continuous indexing refers to using continuous rotation of the workpiece to enable all teeth to be cut without separation of tool and workpiece for indexing.
Generating	Generating refers to the method of cutting gear teeth using a cutting tool having (or through machine movement, simulating) the shape of a particular gear or rack (dependent on type of gear being produced) and moving the tool relatively to the work piece with a rolling-off motion to cut the tooth profile.
Grinding	Grinding refers to material removal using tools with fixed abrasive particles having geometrically undefined cutting edges.
Planing or Slotting	Planing or slotting refers generally to the removal of material in the form of chips by a relative movement of at least one tool with a geometrically defined cutting edge and the workpiece, along a non-circular trajectory, both tool and workpiece being non-rotating. However in this subclass there may be a relative rotational movement in order to generate tooth profiles.
Skiving	Skiving refers to the removal of material in the form of chips from the workpiece by a toothed tool having geometrically defined cutting edges. The tool and workpiece are both rotated with their rotation axes being at a skewed angle. The tool is fed generally parallel to the workpiece axis.
Milling	Milling refers to the removal of material in the form of chips from a workpiece using a rotating tool with a geometrically defined cutting edge where the main cutting force results from the rotation of the tool.
Hobbing	Hobbing is a milling process where the tool takes the form of a worm in which the threads are gashed to form cutting edges. Both tool and workpiece are rotated. It is a continuous generating process.
Face Milling	Face milling is a milling process where the cutting edges of the tool are on teeth or cutter bars which extend axially from a face of the (usually) circular tool, the face being transverse to the tool rotation axis.
Face Hobbing	Face hobbing is a face milling process using continuous indexing.

Broaching	Broaching refers to the removal of material in the form of chips from a workpiece by a relative movement between a tool having multiple teeth and a workpiece along a non-circular trajectory. The difference in height between successive teeth on a broaching tool determines the feed and hence the chip thickness.
Broach-milling	Broach-milling refers to milling with a rotary cutter having a number of teeth of progressively increasing depth or width
Pot broaching	Pot broaching refers to broaching external teeth with an internally toothed tool.
Honing	Honing generally refers to abrading by means of one or more, often compliant, fine grit abrasive tools along a controlled path of combined movements, including a reciprocating movement, in order to smoothen a surface. In this subclass honing also refers to a surface finishing method using toothed tools where tool and workpiece are in crossed axis meshed engagement.
Lapping	Lapping refers to a surface finishing method using abrasives dispersed in a liquid medium or paste on the engaging surfaces of a workpiece, usually whilst the workpiece is in meshed engagement with another toothed member.
Shaving	Shaving refers to a surface finishing method of material removal in the form of chips using a toothed tool with gashes in the flanks of the teeth that act as the geometrically defined cutting edges, the tool and workpiece are in crossed axis meshed engagement.

B23F 1/00

Making gear teeth by tools of which the profile matches the profile of the required surface (special adaptations for making curved teeth B23F 9/00)

Definition statement

This place covers:

Methods and machines for making gear teeth using a tool which matches the required tooth profile.

Examples are:

Manufacturing by grinding (JP59161226):

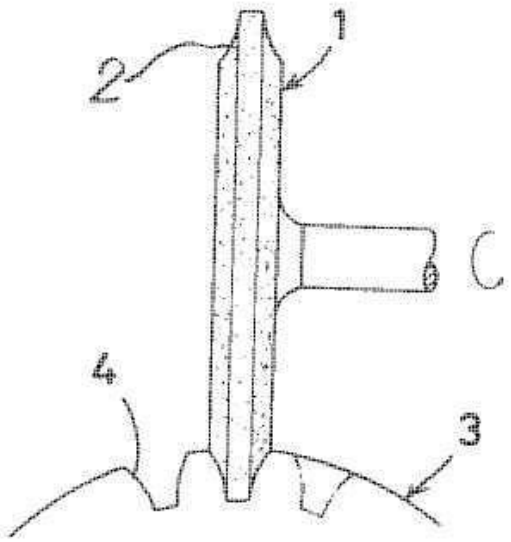

tool (1), workpiece (3)

Manufacturing by planing or slotting (US1636670)

tool (D); workpiece (C)

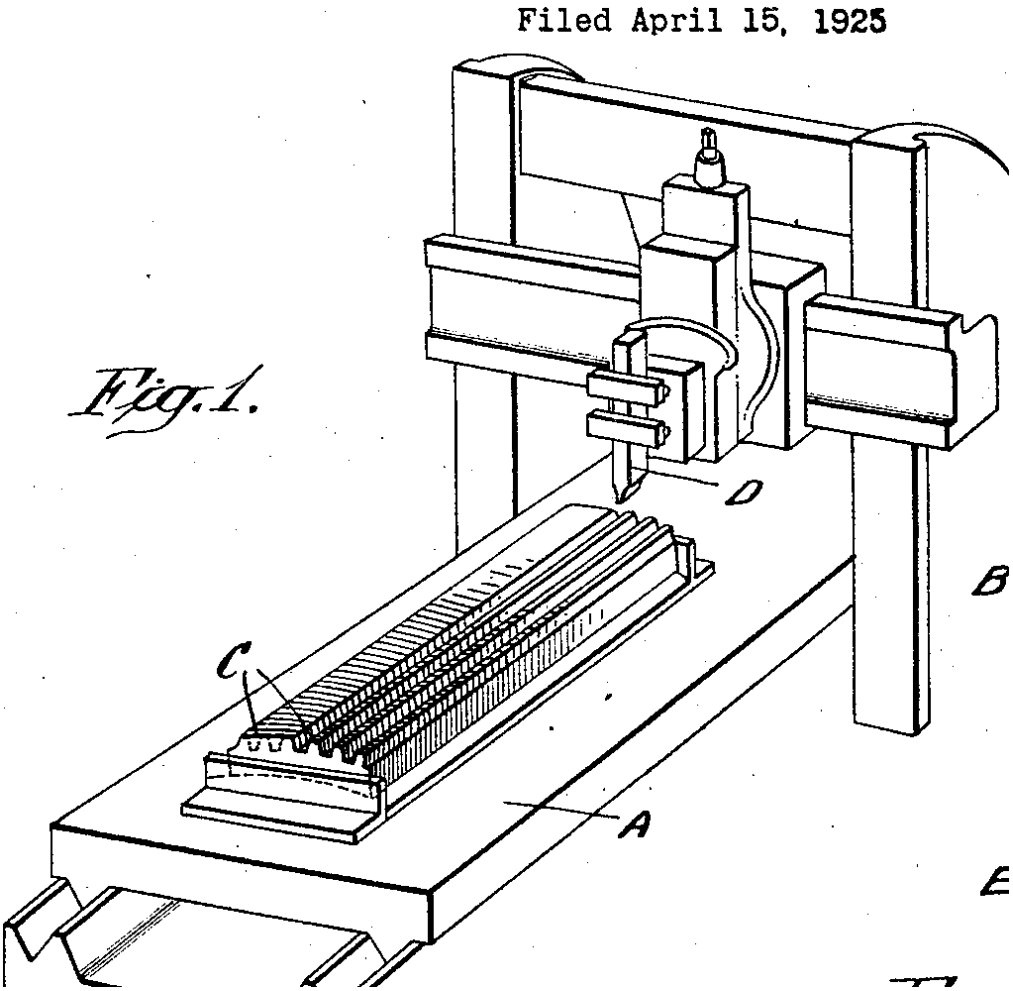

Manufacturing by milling (US2013101367

tool (10), workpiece (20)

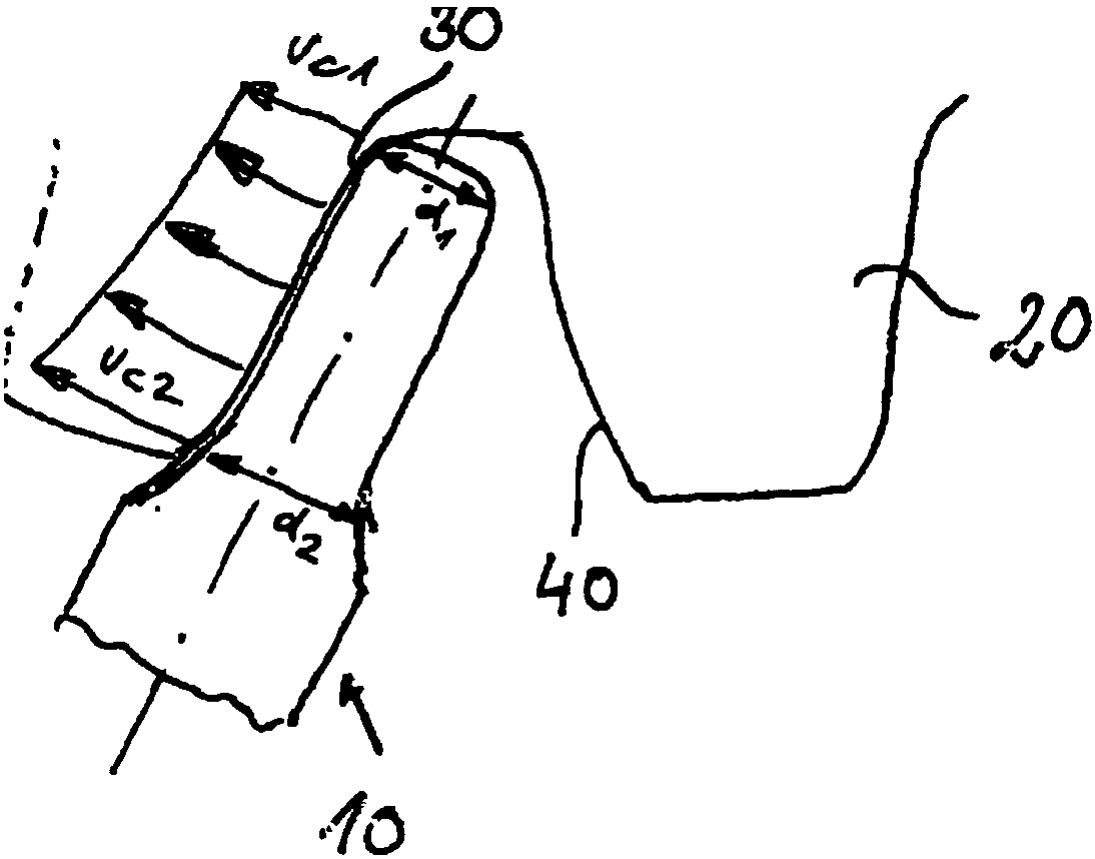

Manufacturing by broaching (JP4025313)

tool (5), workpiece (4)

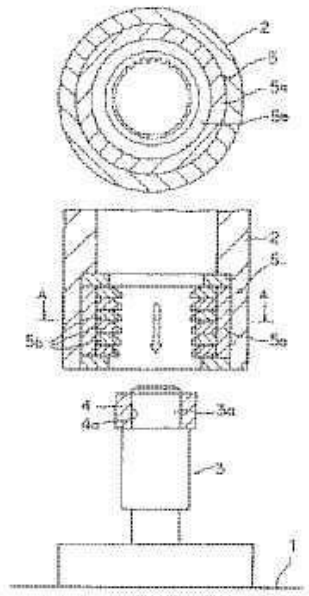

References

Limiting references

This place does not cover:

Gear cutting tools	B23F 21/00

Informative references

Attention is drawn to the following places, which may be of interest for search:

Gear generating methods and machines for straight teeth	B23F 5/00
Gear generating methods and machines for curved teeth	B23F 9/00

Special rules of classification

Where a machine is also used for generating gear straight gear teeth it is additionally classified in the subgroups of B23F 5/00.

B23F 1/02

by grinding

References

Informative references

Attention is drawn to the following places, which may be of interest for search:

Gear generating by grinding	B23F 5/02
Chamfering gear teeth by grinding	B23F 19/12
Grinding, in general	B24B

B23F 1/023

{the tool being a grinding worm}

References

Informative references

Attention is drawn to the following places, which may be of interest for search:

Gear generating using a grinding worm	B23F 5/04

B23F 1/04

by planing or slotting

Definition statement

This place covers:

Planing or slotting refers to the removal of material in the form of chips by a relative movement of at least one tool with a geometrically defined cutting edge and the workpiece, along a non-circular trajectory. The tool and workpiece are generally non-rotating. There may be a rotary indexing movement in between cutting passes

References

Informative references

Attention is drawn to the following places, which may be of interest for search:

Gear generating by planing or slotting	B23F 5/12

B23F 1/06

by milling

Definition statement

This place covers:

Milling refers to the removal of material in the form of chips from a workpiece using a rotating tool with a geometrically defined cutting edge where the main cutting force results from the rotation of the tool.

References

Informative references

Attention is drawn to the following places, which may be of interest for search:

Gear generating by milling	B23F 5/20
Milling, in general	B23C

B23F 3/00

Making gear teeth involving copying operations controlled by templates having a profile which matches that of the required tooth face or part thereof or a copy thereof to a different scale (copying systems or devices per se B23Q 35/00)

Definition statement

This place covers:

Machines and methods for making gear teeth using templates which have a profile matching at least a part of the required tooth profile. This class includes roughing and finishing, including chamfering teeth.

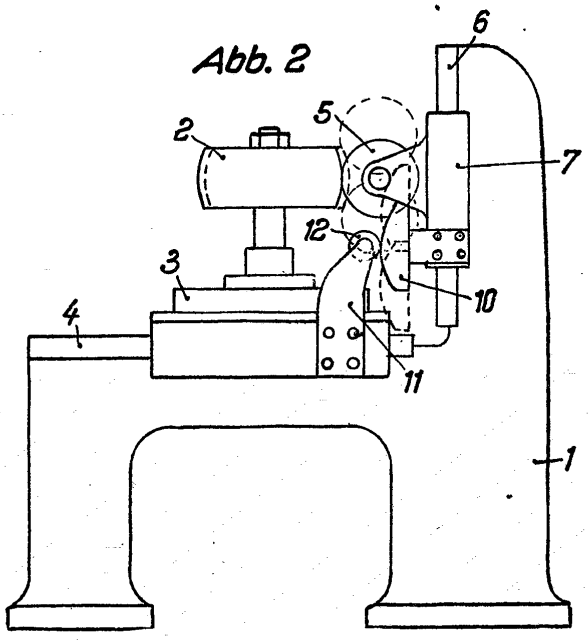

Example: DE763595

References

Informative references

Attention is drawn to the following places, which may be of interest for search:

Copying systems or devices per se	B23Q 35/00

B23F 5/00

Making straight gear teeth involving moving a tool relatively to a workpiece with a rolling-off or an enveloping motion with respect to the gear teeth to be made

Definition statement

This place covers:

Machines and methods of making straight gear teeth involving moving the tool relatively to work piece with a rolling-off motion, e.g. generating. The methods include but are not limited to:

- grinding, with a grinding worm or grinding disc

- planing, including shaping and skiving
- milling, including hobbing

Example(s):

By grinding (US4400916)

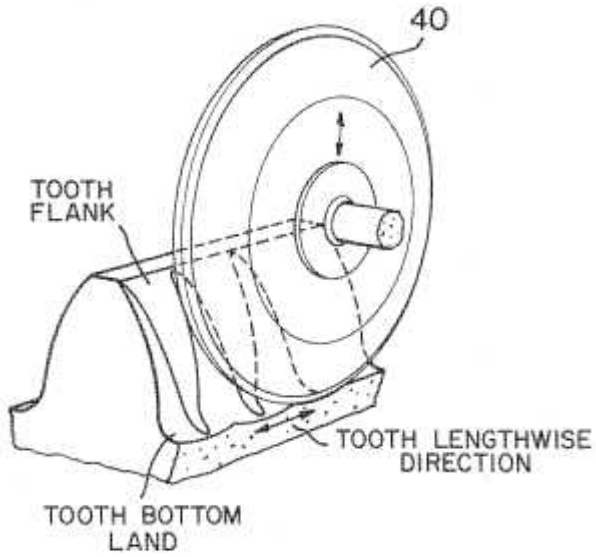

by planing or slotting (EP1342524)

tool (44), workpiece (12)

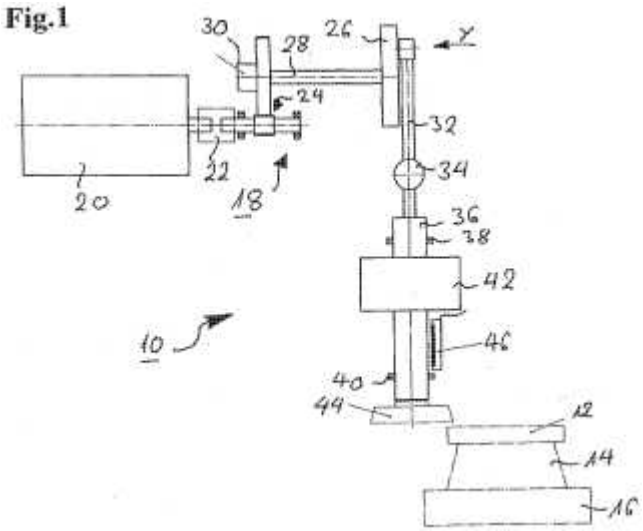

by hobbing (JP2010158748)

tool (15), workpiece (W)

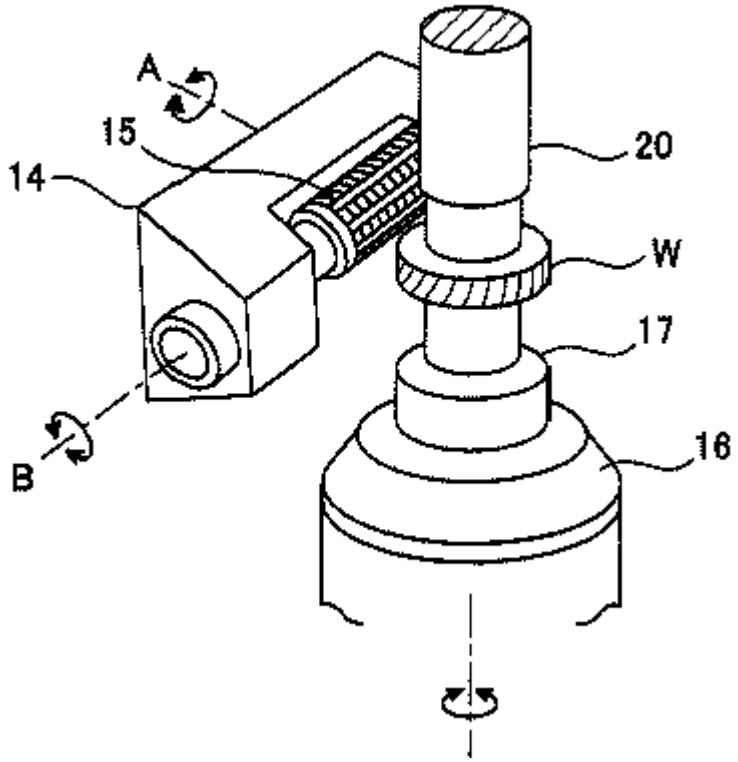

References

Informative references

Attention is drawn to the following places, which may be of interest for search:

Making curved gear teeth	B23F 9/00

B23F 5/04

the tool being a grinding worm

References

Informative references

Attention is drawn to the following places, which may be of interest for search:

Making straight gear teeth involving moving a hob relatively to a workpiece with a rolling-off motion (spur gears)	B23F 5/22
Making straight gear teeth involving moving a hob relatively to a workpiece with a rolling-off motion (bevel gears)	B23F 5/24

Special rules of classification

Methods and machines which may use either a grinding worm or a hob are to be classified in both B23F 5/04 and B23F 5/22

B23F 5/163

{the tool and workpiece being in crossed axis arrangement, e.g. skiving, i.e. "Waelzschaelen"}

Definition statement

This place covers:

Skiving refers to the removal of material in the form of chips from the workpiece by a toothed tool having geometrically defined cutting edges. The tool and workpiece are both rotated with their rotation axes being at a skewed angle. The tool is fed generally parallel to the workpiece axis, depending on the type of gear being cut

Example (DE102007015357)

tool (3), workpiece (14)

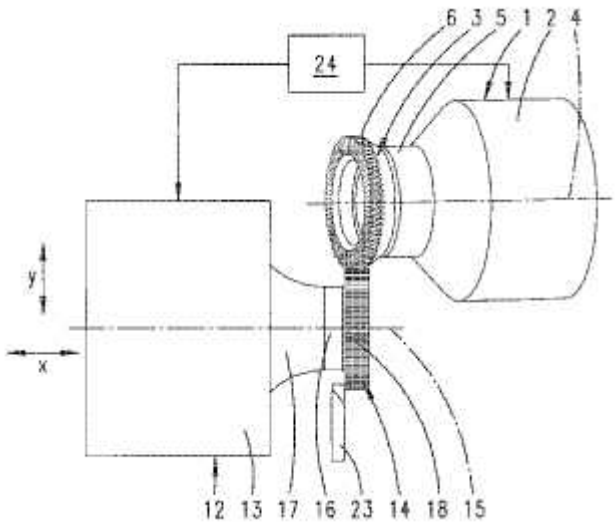

Synonyms and Keywords

In patent documents, the following words/expressions are often used as synonyms:

- "Skiving" and "hob peeling"

B23F 5/205

{with plural tools}

Definition statement

This place covers:

Example (JP359182020)

plural hobs, 15,16

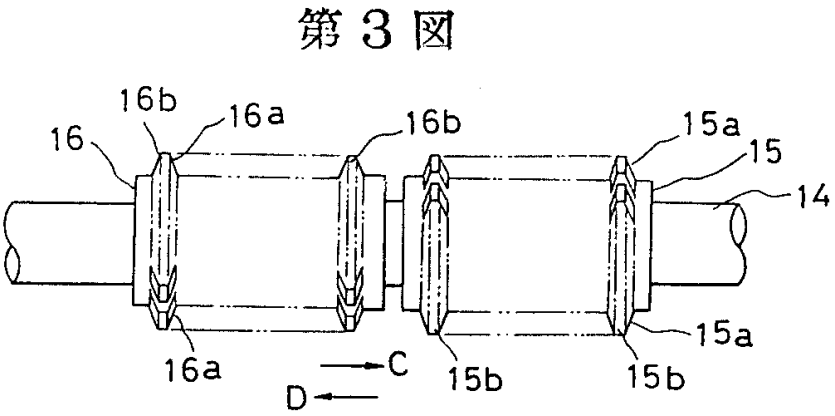

B23F 5/207

{the tools being interlocked}

Definition statement

This place covers:

Example (DE1269869)

tools (5), workpiece (10)

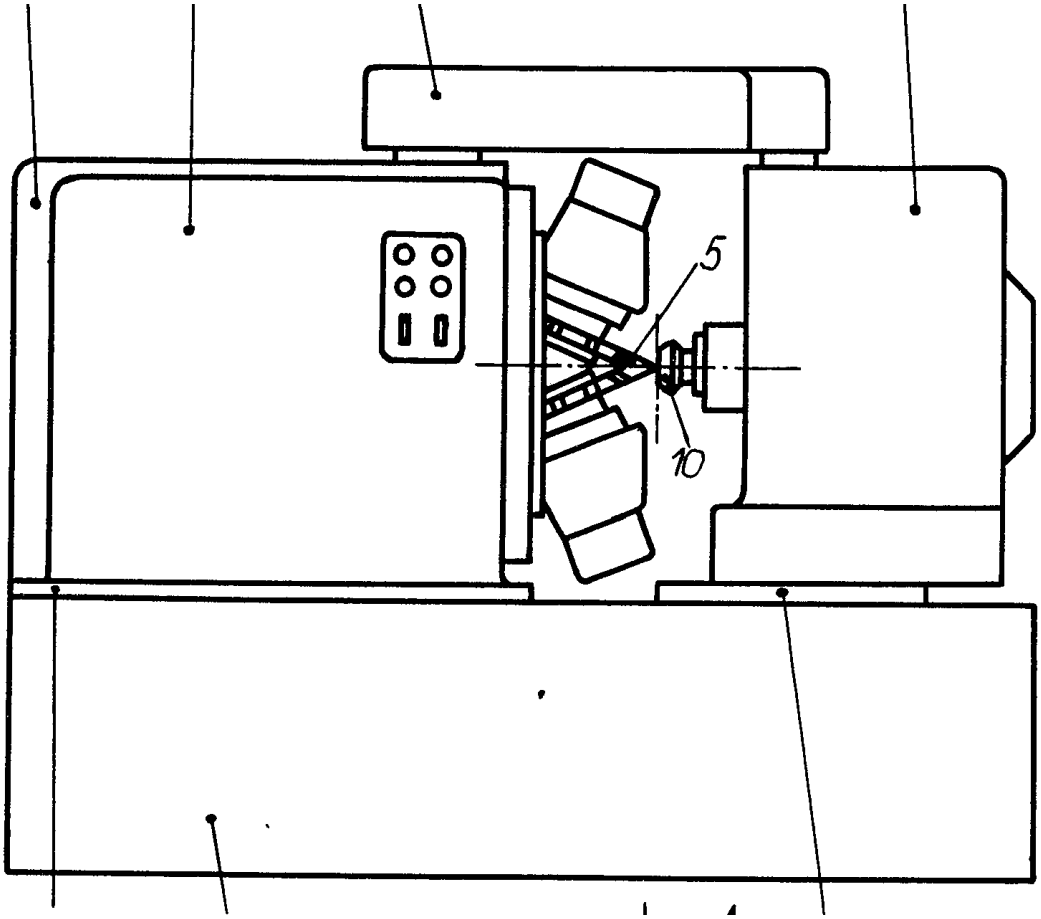

Example (US7364391)

tools (6), workpiece (8)

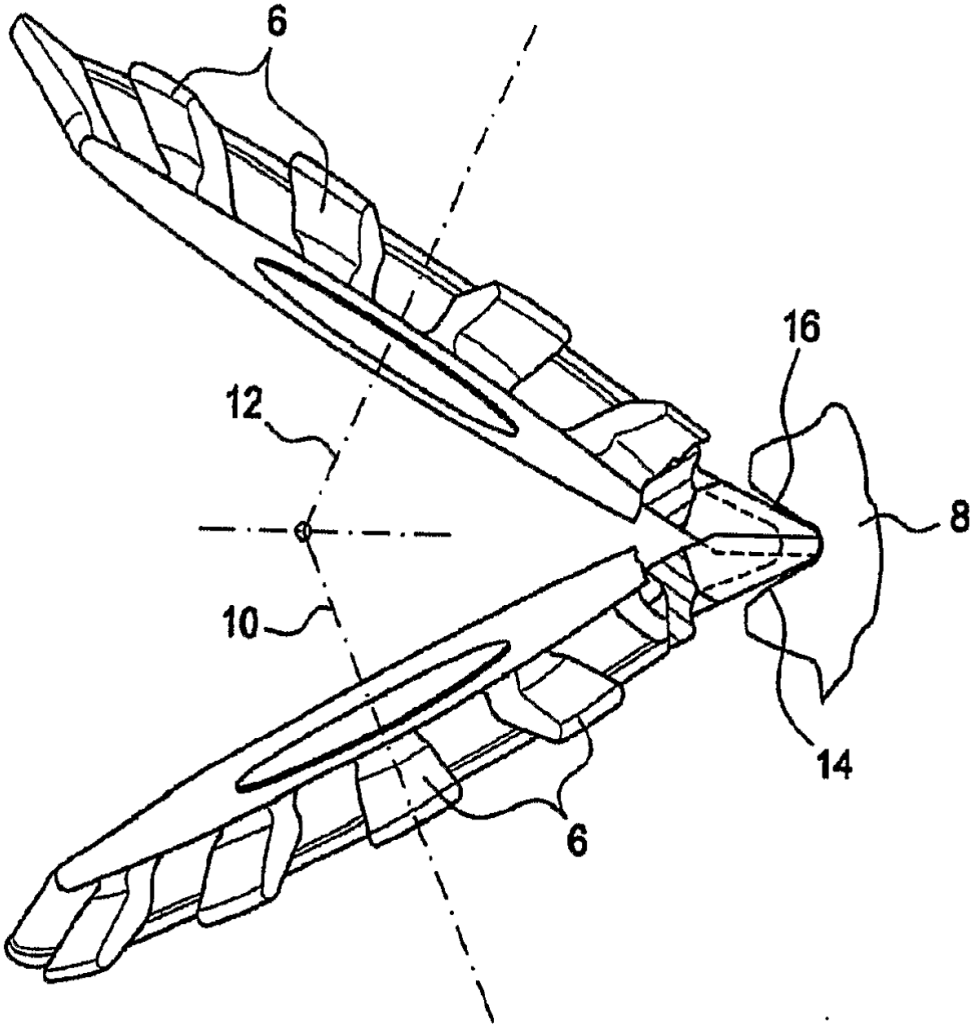

B23F 5/22

the tool being a hob for making spur gears

References

Informative references

Attention is drawn to the following places, which may be of interest for search:

Gear manufacturing hobs, per se	B23F 21/16

B23F 5/24

the tool being a hob for making bevel gears

References

Informative references

Attention is drawn to the following places, which may be of interest for search:

Taper hobs for manufacturing bevel gears	B23F 21/18

B23F 7/00

Making herringbone gear teeth

Definition statement

This place covers:

Methods and machines for making herringbone and double helical gears.

Example (US20040031152):

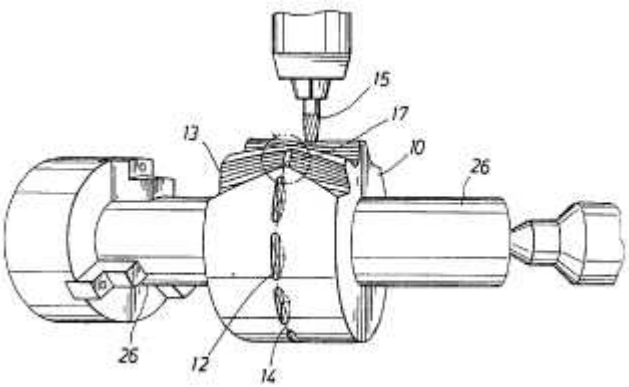

B23F 9/00

Making gears having teeth curved in their longitudinal direction

Definition statement

This place covers:

Methods and machines for making gears having teeth curved in their longitudinal direction, i.e. the tooth is curved along the tooth direction. e.g. spiral bevel gears, hypoid gears.

Example (US20050064794)

tool 7, Workpiece 31

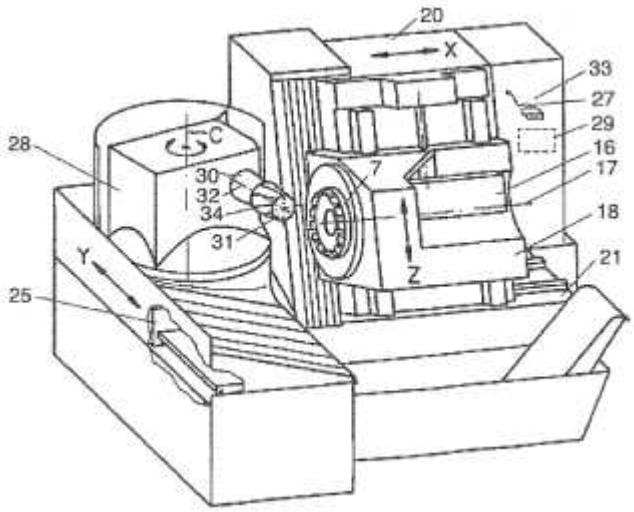

(US20020154961)

tool 18, workpiece 50

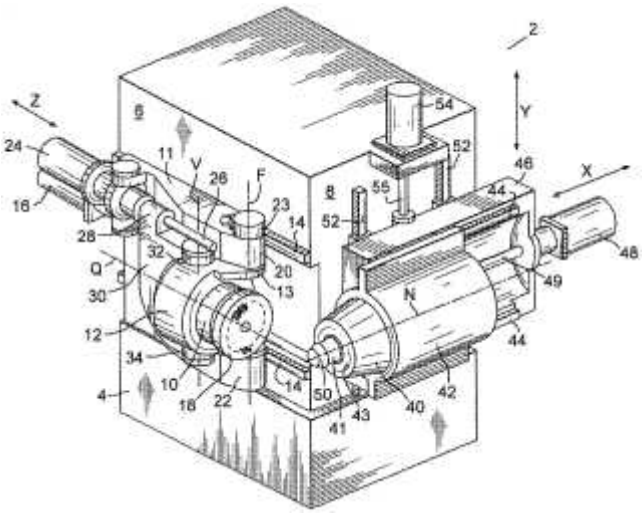

B23F 9/025

{with a face-mill-type, i.e. cup-shaped, grinding wheel}

References

Informative references

Attention is drawn to the following places, which may be of interest for search:

Face-mill-type grinding tools	B23F 21/023

Special rules of classification

Methods and machines relating to both face-mill-type grinding and face milling using milling cutters are also to be classified in B23F 9/10.

B23F 9/06

having a shape similar to a spur-wheel or part thereof

References

Informative references

Attention is drawn to the following places, which may be of interest for search:

Gear shaper cutters having a shape similar to a spur gear or part thereof	B23F 21/10

B23F 9/082

{with a hob}

References

Limiting references

This place does not cover:

Face hobbing	B23F 19/101

Informative references

Attention is drawn to the following places, which may be of interest for search:

Hobs for gear cutting	B23F 21/16

B23F 9/084

{the hob being tapered}

References

Informative references

Attention is drawn to the following places, which may be of interest for search:

Tapered hobs	B23F 21/18

B23F 9/10

with a face-mill

References

Informative references

Attention is drawn to the following places, which may be of interest for search:

Face mills for gear cutting	B23F 21/22

Special rules of classification

Methods or machines relating to both face-mill-type grinding and face milling using a milling tool are also to be classified in B23F 9/025.

B23F 9/105

{with continuous indexing, i.e. with continuous work rotation}

Definition statement

This place covers:

Methods and machines for manufacturing curved gear teeth by milling with a face mill with continuous indexing, i.e. face hobbing.

B23F 11/00

Making worm wheels, e.g. by hobbing

Definition statement

This place covers:

Methods and machines for manufacturing worm wheels, where worm wheels are the mating gears for worms. Both rough and finish machining are included.

Example of manufacturing by hobbing (GB362448, Figure 4):

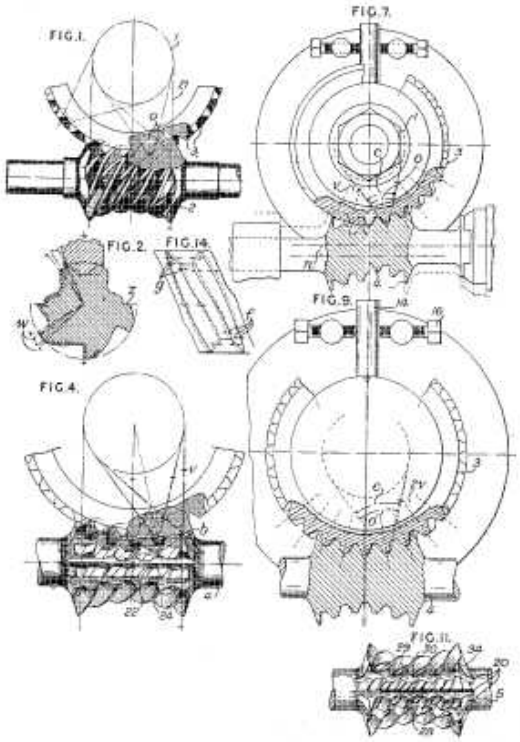

References

Informative references

Attention is drawn to the following places, which may be of interest for search:

Making worms	B23F 13/00

B23F 13/00

Making worms by methods essentially requiring the use of machines of the gear-cutting type (making screw-thread B23G)

Definition statement

This place covers:

Machines and methods of the gear cutting type used for making worms. Both rough and finish machining are included.

Example (US5647703)

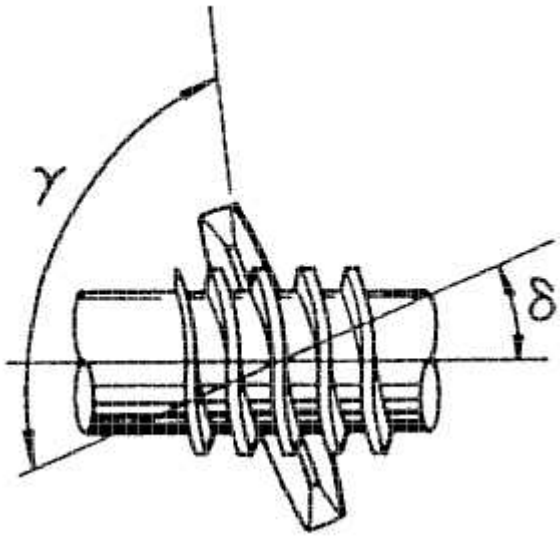

References

Informative references

Attention is drawn to the following places, which may be of interest for search:

Making worm wheels	B23F 11/00

B23F 13/06

Making worms of globoidal shape

Definition statement

This place covers:

Methods and machines for making globoidal, e.g. hourglass shape worms.

Example (US3875635)

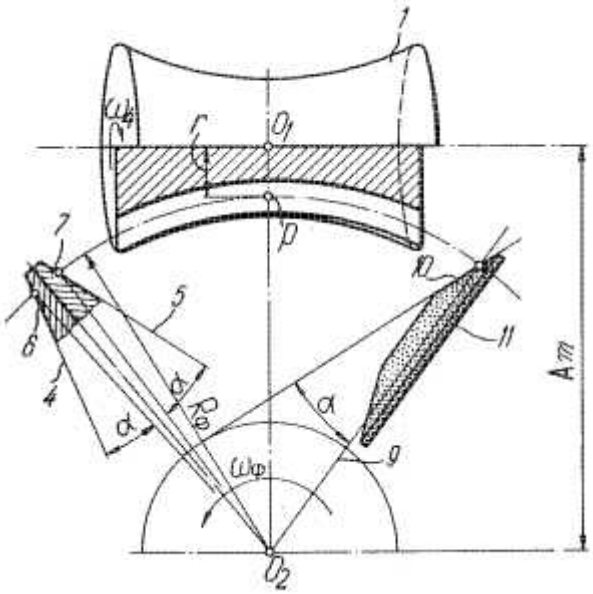

B23F 15/00

Methods or machines for making gear wheels of special kinds not covered by groups B23F 7/00 - B23F 13/00

Definition statement

This place covers:

Methods and machines for special types of gear wheels and toothed members, e.g. sprockets, elliptical wheels, pump rotors, toothed clutches and face (crown) gears.

B23F 15/00 can be viewed as a catch-all group for gears or toothed members not covered by other groups in the subclass or by the subgroups of B23F 15/00.

Example (US4521141)

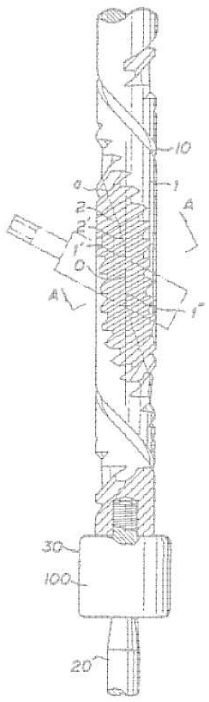

B23F 15/06

Making gear teeth on the front surface of wheels, e.g. for clutches or couplings with toothed faces

Definition statement

This place covers:

Methods and machines for making gear teeth on the front surface of wheels.

The front surface is generally understood to be a face surface that is transverse relative to the rotation axis.

Example, clutches (GB594492)

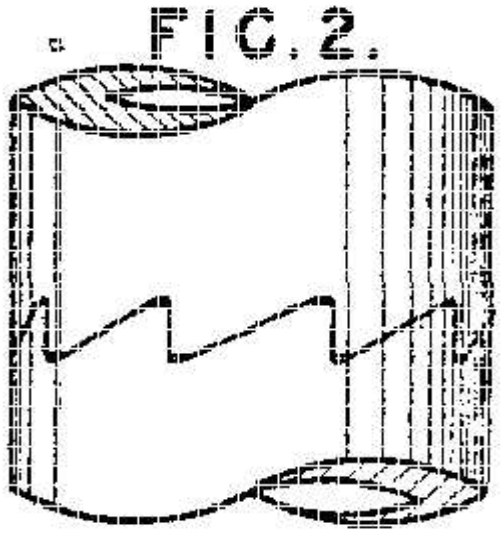

Example: Face gears (EP0906171):

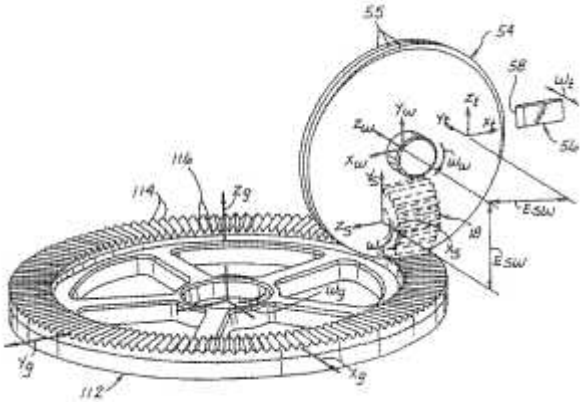

B23F 15/08

Making intermeshing rotors, e.g. of pumps

Definition statement

This place covers:

Example (US4034645):

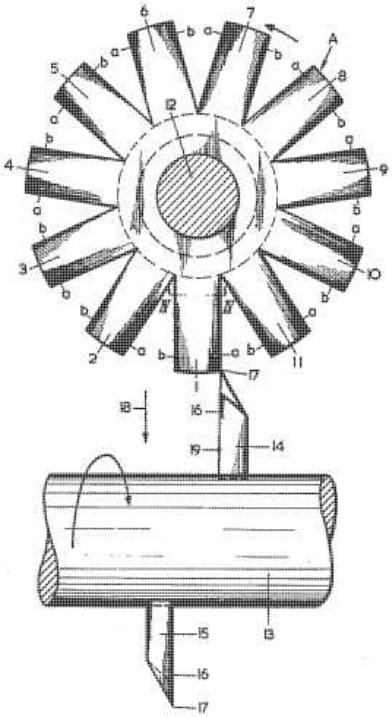

B23F 17/00

Special methods or machines for making gear teeth, not covered by the preceding groups

Definition statement

This place covers:

Special methods and machines for making gear teeth, not covered by other groups. Examples are methods and machines for making gear pairs, machines for machining tooth roots and machines which combine different machining operations.

B23F 17/005

{for machining tooth fillet or tooth root}

Definition statement

This place covers:

Example (JP61117014):

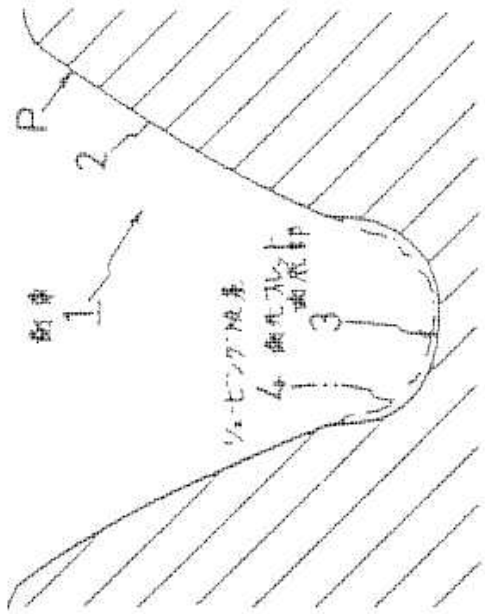

B23F 17/006

{using different machines or machining operations}

Definition statement

This place covers:

Example (DE2008034402)

workpiece (3), hob (4), cutting tools (7,10), chamfering tools (8a, 8b)

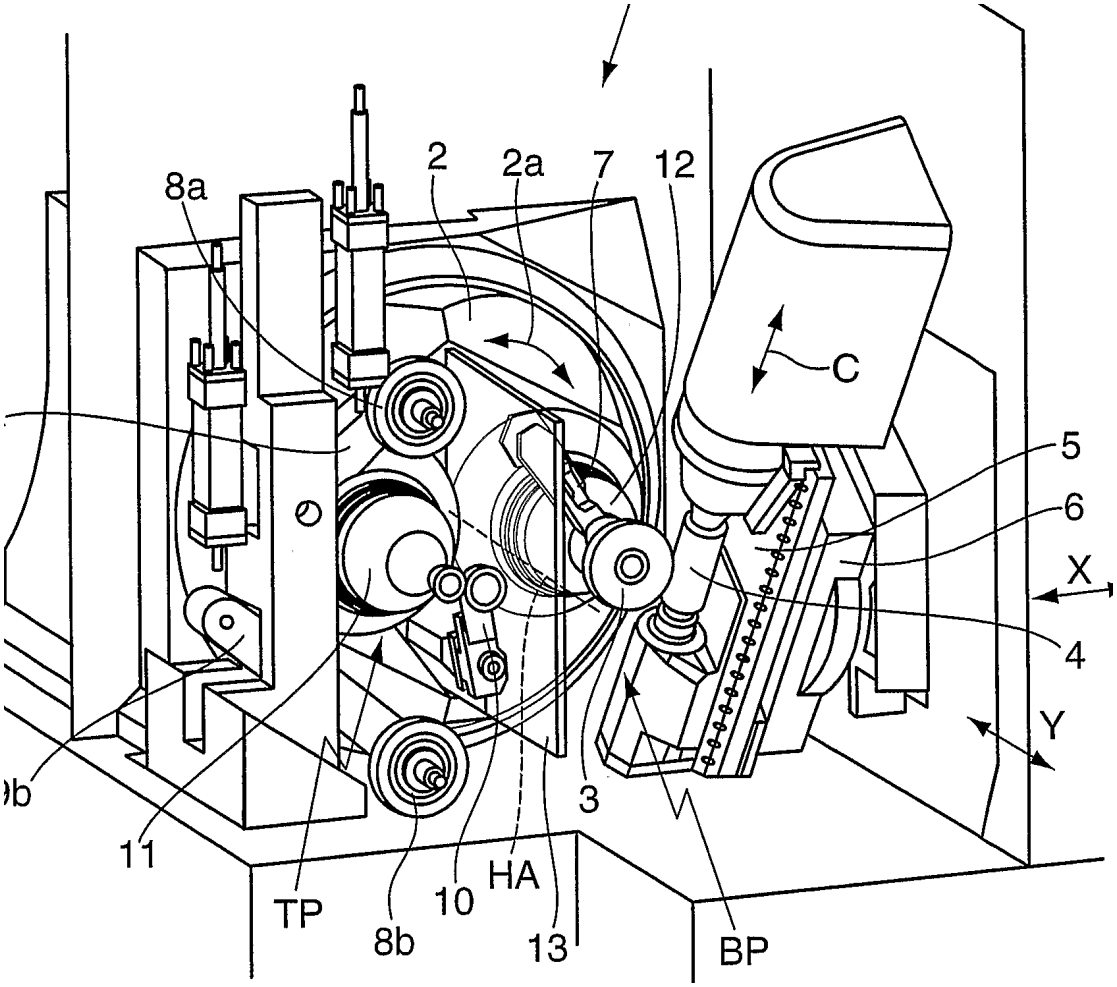

B23F 17/008

{Features relating to transfer of work gears between different work stations}

References

Informative references

Attention is drawn to the following places, which may be of interest for search:

Arrangements for handling work with machine tools, in general	B23Q 7/00

B23F 19/00

Finishing gear teeth by other tools than those used for manufacturing gear teeth

Definition statement

This place covers:

Methods and machines for finishing gear teeth. The finishing process may include modifying the tooth form by crowning, by chamfering and by the provision of undercuts and stop notches. The group also includes deburring.

Example (EP1106290)

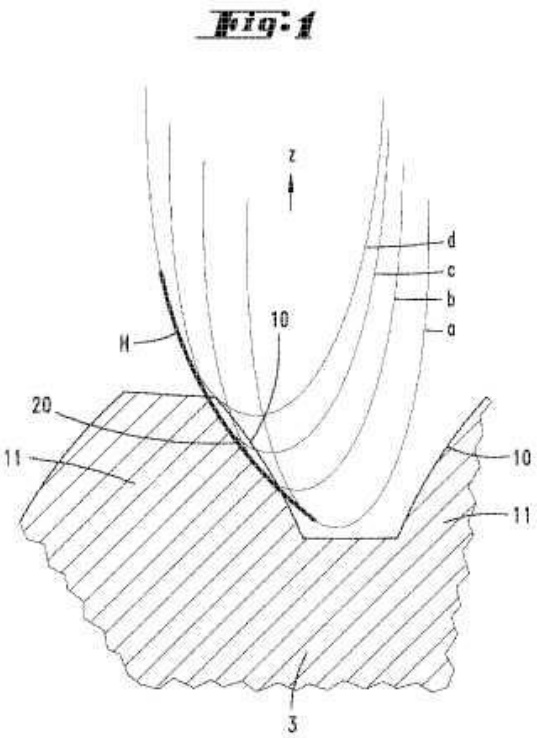

Special rules of classification

Methods and machines for finish grinding should be classified under the other grinding subgroups with the exception of cup-shaped grinding tools (B23F 19/005).

B23F 19/005

{using a face-mill-type tool, e.g. a milling or a grinding tool}

Definition statement

This place covers:

Example: (US5580298)

tool (24), workpiece (26)

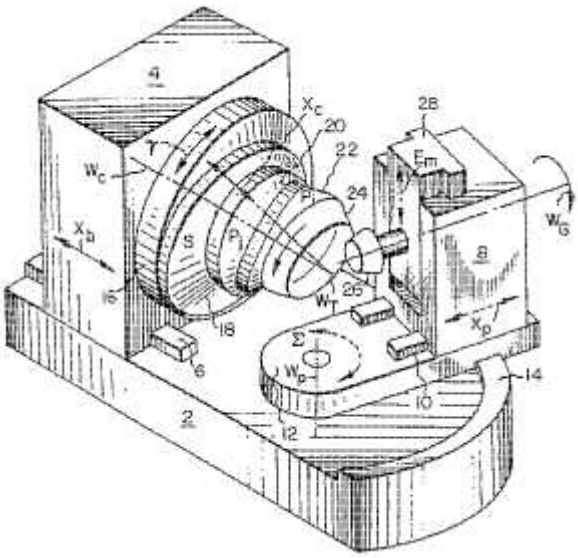

B23F 19/02

Lapping gear teeth

Definition statement

This place covers:

Example (US6217421)

workpieces (48,36), lapping compound supply means (64,66)

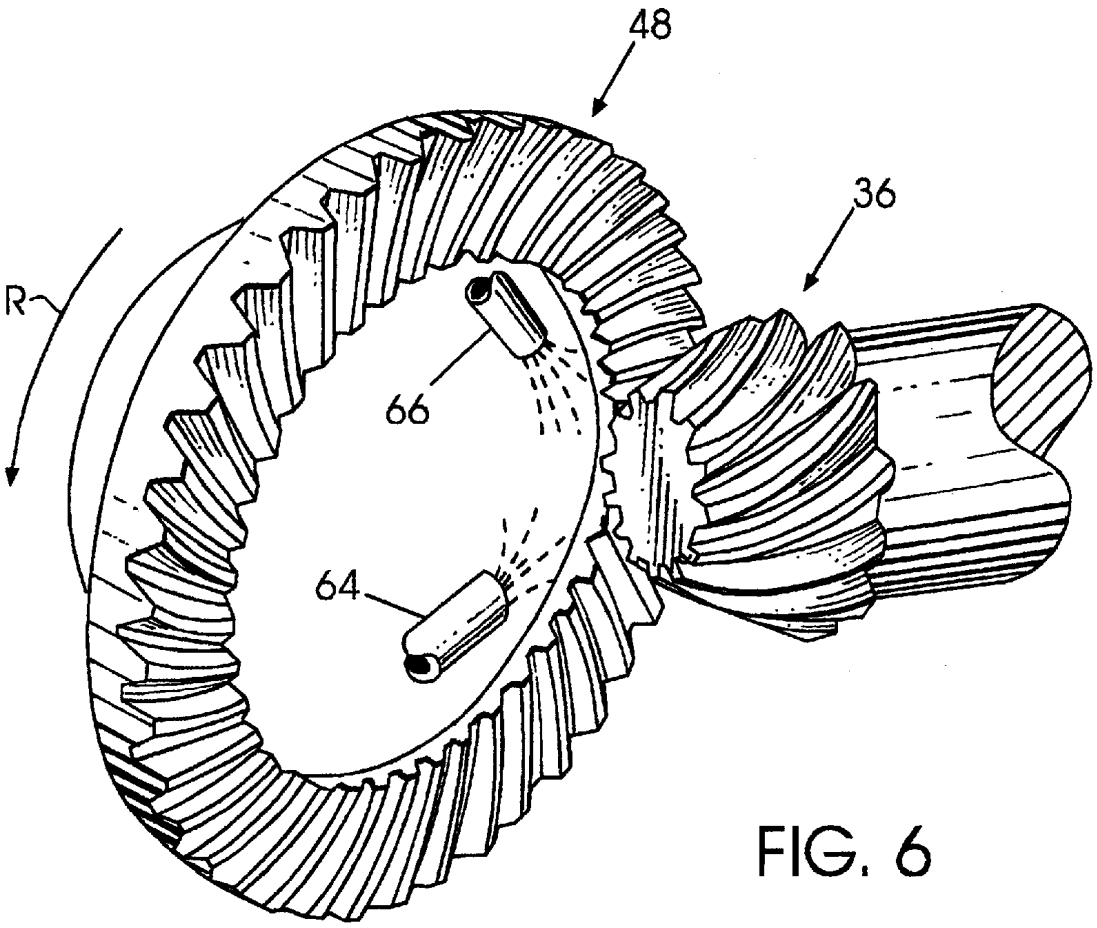

FIG. 6

References

Informative references

Attention is drawn to the following places, which may be of interest for search:

Lapping in general	B24B 37/00

B23F 19/05

Honing gear teeth

Definition statement

This place covers:

Example (US4077164)

tool (hone, 20), workpiece (26)

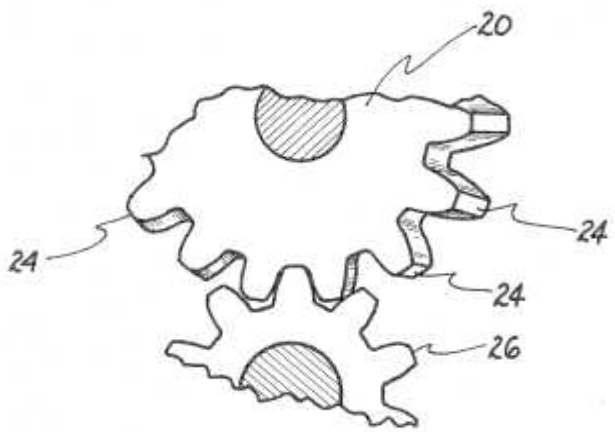

References

Informative references

Attention is drawn to the following places, which may be of interest for search:

Honing tools for gear teeth	B23F 21/03

B23F 19/052

{by making use of a tool in the shape of a worm}

Definition statement

This place covers:

Example (US3740904)

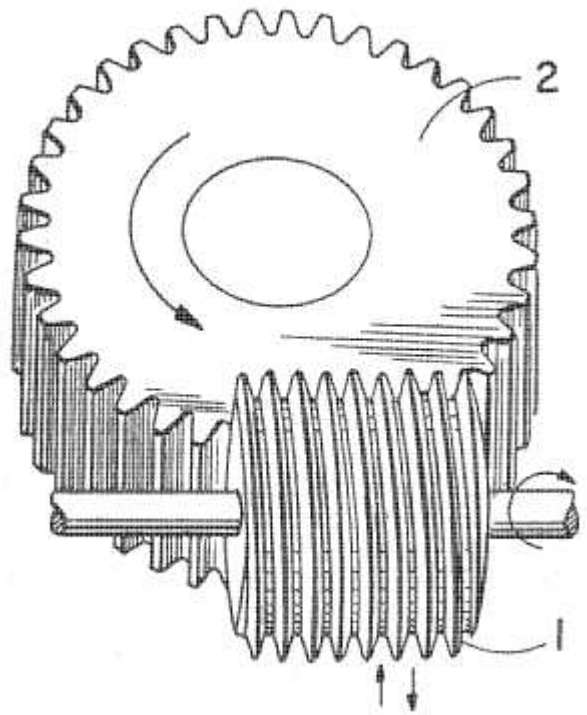

References

Informative references

Attention is drawn to the following places, which may be of interest for search:

Honing worms for gear teeth	B23F 21/035

B23F 19/057

{by making use of a tool in the shape of an internal gear}

Definition statement

This place covers:

Example (DE4317306)

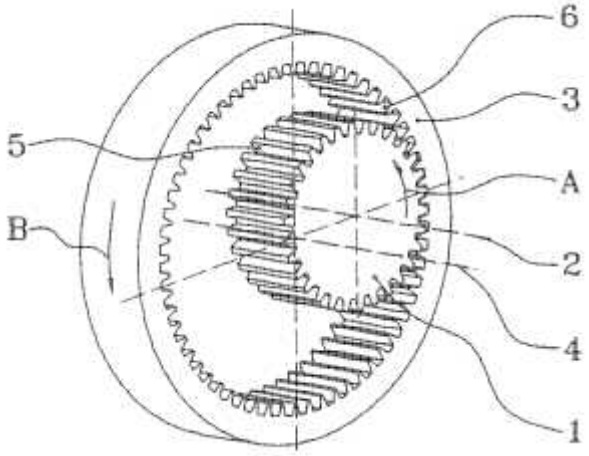

B23F 19/06

Shaving the faces of gear teeth

Definition statement

This place covers:

Example (GB801289):

tool (C, 33), workpiece (G)

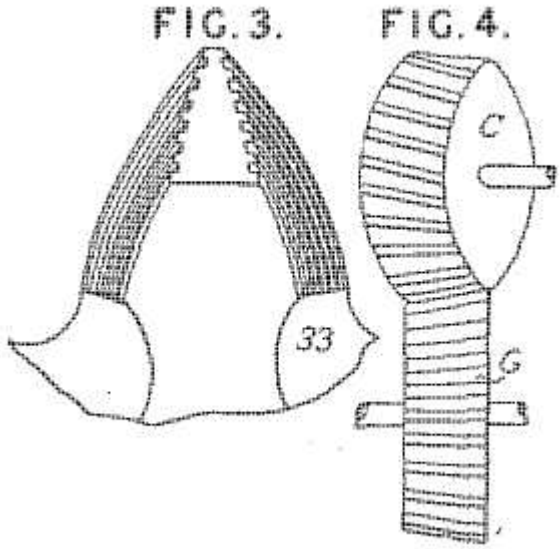

References

Informative references

Attention is drawn to the following places, which may be of interest for search:

Shaving cutters for gear teeth	B23F 21/28

B23F 19/063

{by making use of a tool in the shape of an internal gear}

References

Informative references

Attention is drawn to the following places, which may be of interest for search:

Shaving cutters in the shape of an internal gear	B23F 21/286

B23F 19/10

Chamfering the end edges of gear teeth

Definition statement

This place covers:

Methods and machines for chamfering and deburring, including secondary deburring of the end edges of gear teeth.

Example (EP1022082)

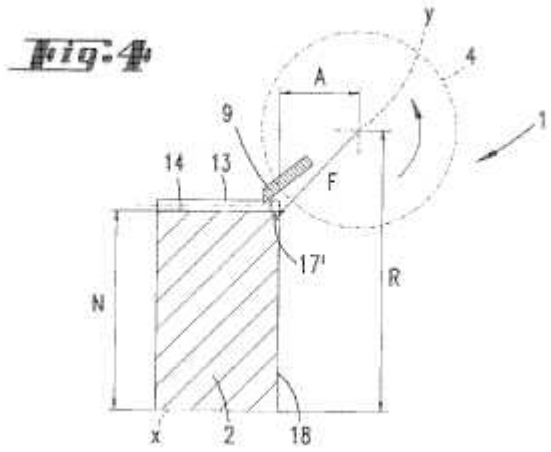

B23F 19/107

{the tool being a fly cutter}

References

Informative references

Attention is drawn to the following places, which may be of interest for search:

Fly cutters for use in gear manufacture	B23F 21/20

B23F 21/00

Tools specially adapted for use in machines for manufacturing gear teeth

Definition statement

This place covers:

Included in this group are details of tools specially adapted for manufacturing gear teeth.

Glossary of terms

In this place, the following terms or expressions are used with the meaning indicated:

Inserted cutting elements	is understood as meaning that the tool has a body and cutting elements which take the form of inserts are fixed into the body.
Inserted cutting elements in exchangeable arrangement	is understood as meaning that the inserted cutting elements can be removed and replaced by new inserts when required.

B23F 21/02

Grinding discs; Grinding worms (truing grinding tools B24B; grinding tools in general B24D)

Definition statement

This place covers:

Example (US4533812):

grinding disc (1)

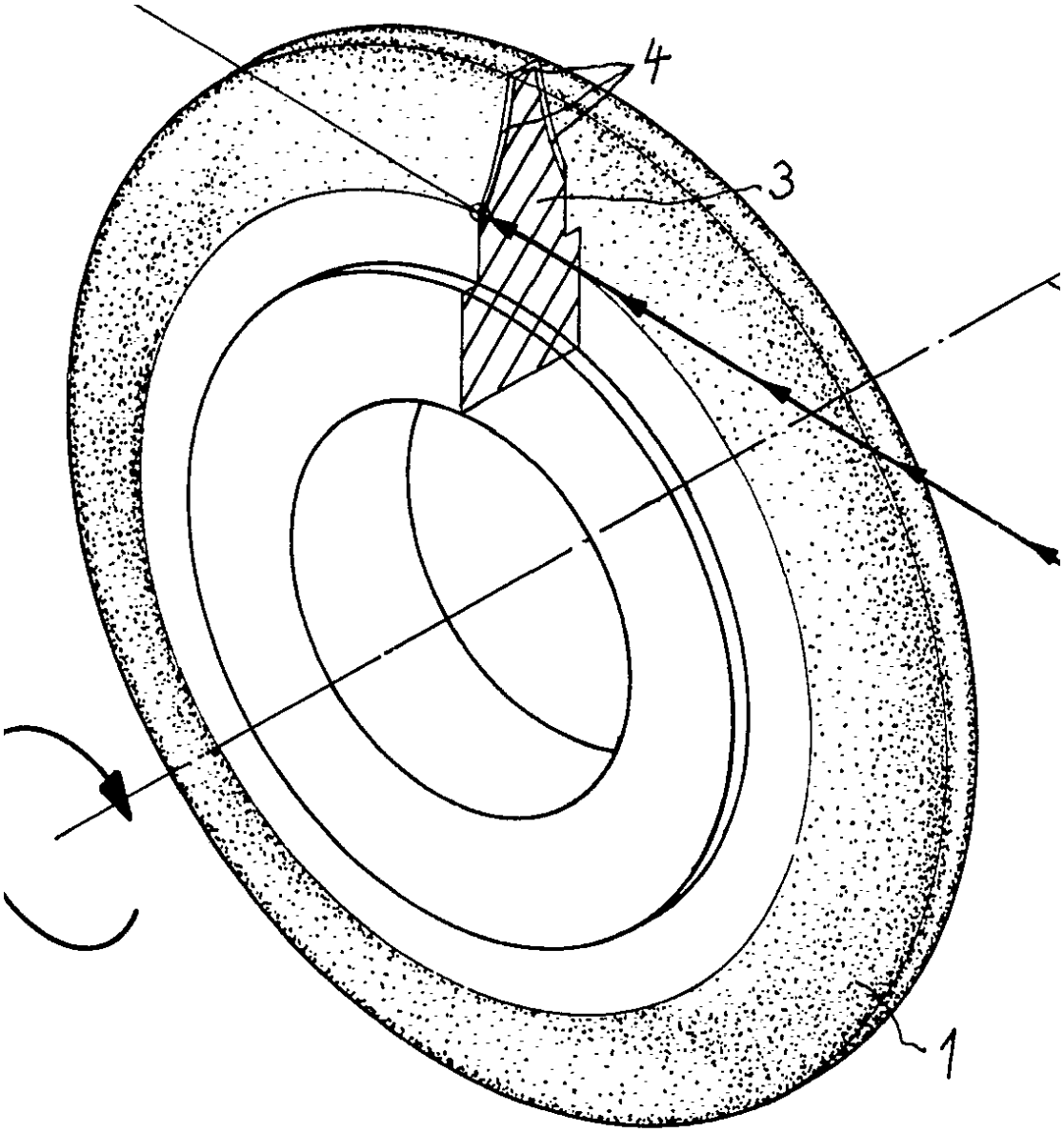

B23F 21/023

{Face-mill-type, i.e. cup-shaped, grinding wheels}

Definition statement

This place covers:

Example (EP1184122)

FIG.3

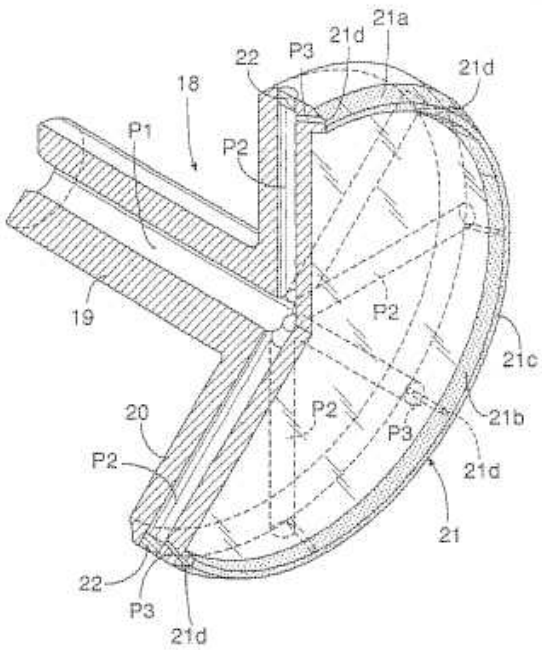

References

Informative references

Attention is drawn to the following places, which may be of interest for search:

Making curved gear teeth with a cup-shaped grinding wheel	B23F 9/025

B23F 21/026

{Grinding worms}

Definition statement

This place covers:

Example (JP6297243):

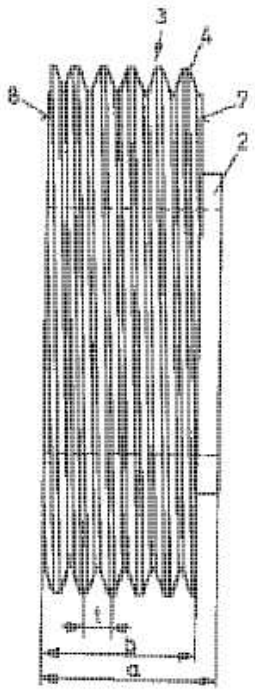

References

Informative references

Attention is drawn to the following places, which may be of interest for search:

Making straight teeth where the profile matches the profile of the required surface using a grinding worm	B23F 1/023
Generating straight teeth using a grinding worm	B23F 5/04

B23F 21/03

Honing tools

Definition statement

This place covers:

Example (WO9924203)

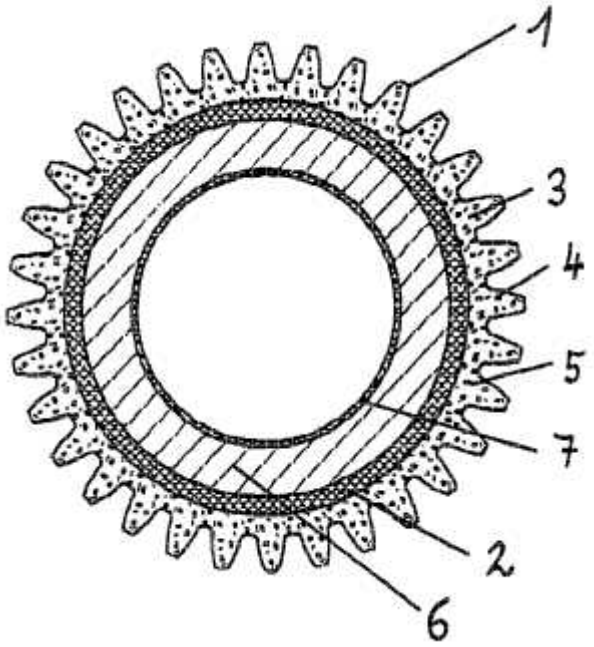

References

Informative references

Attention is drawn to the following places, which may be of interest for search:

Honing gear teeth	B23F 19/05

B23F 21/035

{Honing worms}

Definition statement

This place covers:

Example (US3740904)

Tool (1), workpiece (2)

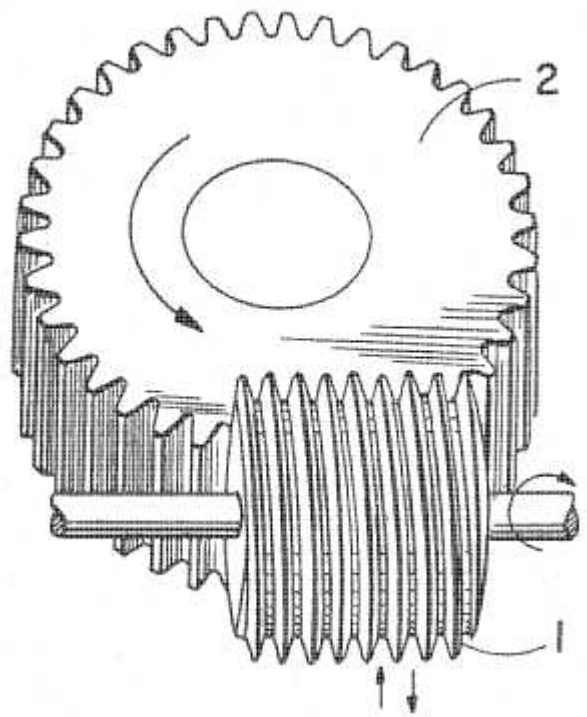

References

Informative references

Attention is drawn to the following places, which may be of interest for search:

Honing gear teeth with a honing worm	B23F 19/052

B23F 21/04

Planing or slotting tools

References

Informative references

Attention is drawn to the following places, which may be of interest for search:

Generating straight teeth by planing or slotting	B23F 5/12
Making curved teeth by planing or slotting	B23F 9/04

B23F 21/06

having a profile which matches a gear tooth profile

References

Informative references

Attention is drawn to the following places, which may be of interest for search:

Making straight teeth where the profile of the tool matches the profile of the required surface by planing or slotting	B23F 1/04

B23F 21/08

having the same profile as a tooth or teeth of a rack

Definition statement

This place covers:

Example (GB146769):

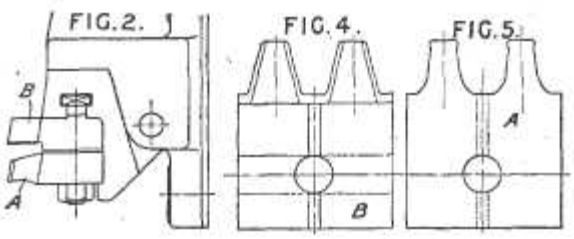

References

Informative references

Attention is drawn to the following places, which may be of interest for search:

Making straight gear teeth using a rolling-off or enveloping motion by planning or slotting where the tool has the same profile as a tooth or teeth of a rack	B23F 5/14

B23F 21/10

Gear-shaper cutters having a shape similar to a spur wheel or part thereof

Definition statement

This place covers:

Gear shaper cutters having a shape similar to a spur wheel or part thereof, e.g. pinion cutters

Example (GB220192)

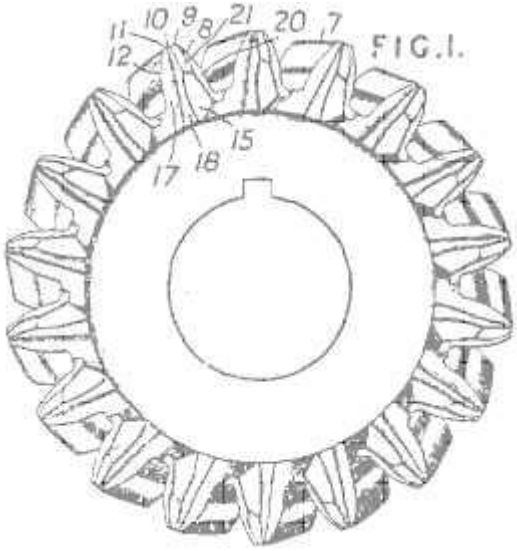

References

Informative references

Attention is drawn to the following places, which may be of interest for search:

Making straight teeth involving a rolling-off motion by planing or slotting using a tool having the same profile as a spur wheel	B23F 5/16
Making curved teeth by planing or slotting using a tool having the same profile as a spur wheel	B23F 9/06

B23F 21/12

Milling tools

References

Informative references

Attention is drawn to the following places, which may be of interest for search:

Milling cutters, in general	B23C 5/00

B23F 21/122

{having a shape similar to that of a gear or part thereof, with cutting edges situated on the tooth contour lines}

References

Informative references

Attention is drawn to the following places, which may be of interest for search:

Making straight teeth involving moving a tool relatively to a workpiece with a rolling-off motion by milling using a tool that has a shape similar to that of a gear or part thereof, with cutting edges situated on the tooth contour lines	B23F 5/202

B23F 21/14

Profile cutters of disc type

Definition statement

This place covers:

Example (GB590978):

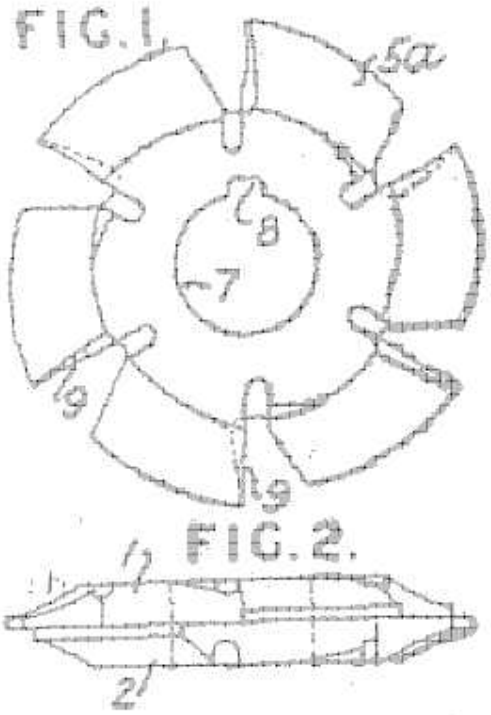

B23F 21/16

Hobs

Definition statement

This place covers:

Example (JP59001120):

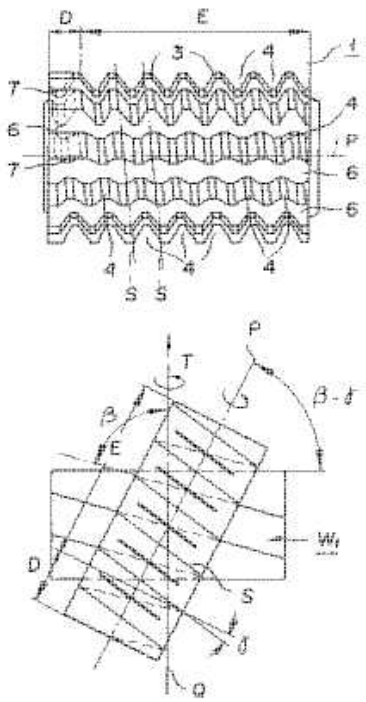

References

Informative references

Attention is drawn to the following places, which may be of interest for search:

Hobbing straight gear teeth	B23F 5/22
Hobbing curved gear teeth	B23F 9/082

B23F 21/166

{in exchangeable arrangement}

Definition statement

This place covers:

Example (US4735115)

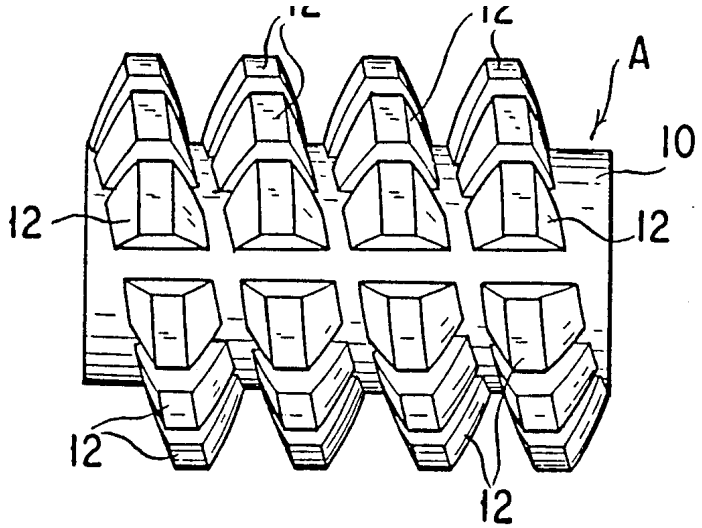

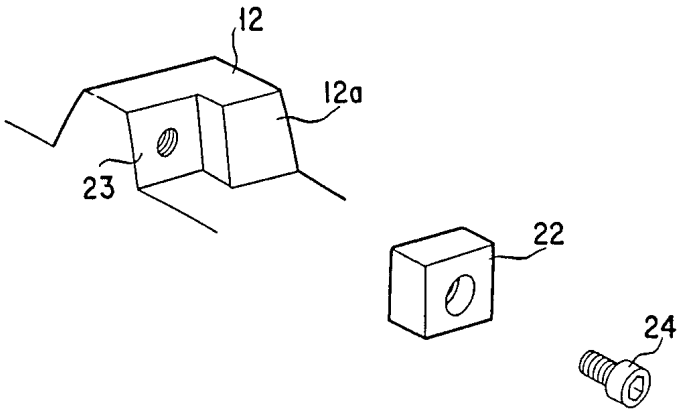

B23F 21/18

Taper hobs, e.g. for bevel gears

Definition statement

This place covers:

Example (GB955699):

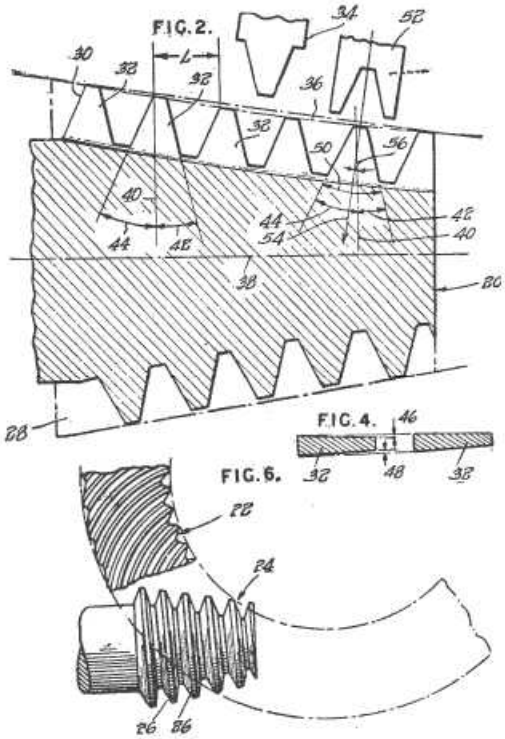

B23F 21/20

Fly cutters

Definition statement

This place covers:

Example (EP0088807):

tool (7), workpiece (10)

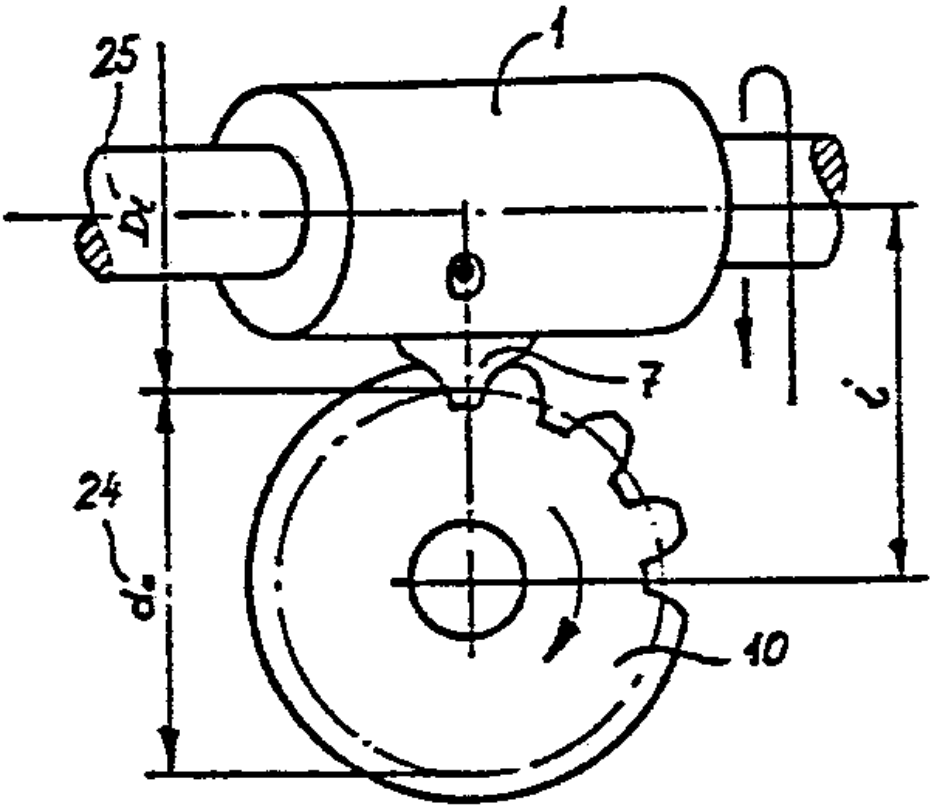

B23F 21/22

Face-mills for longitudinally-curved gear teeth

Definition statement

This place covers:

Example (GB 473050):

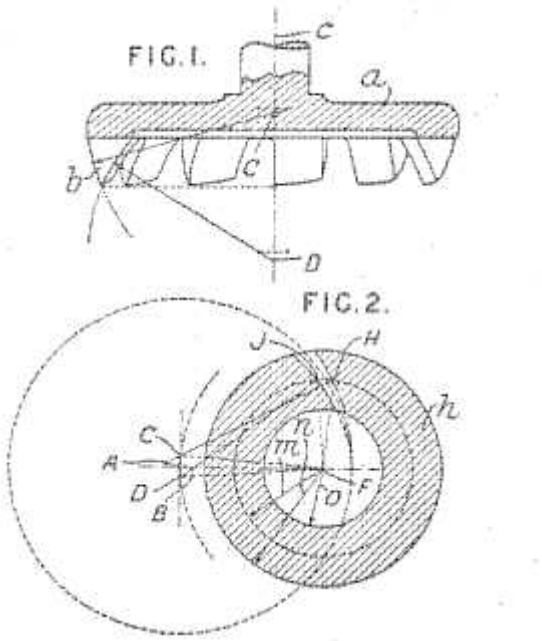

References

Informative references

Attention is drawn to the following places, which may be of interest for search:

Making curved gear teeth by face milling	B23F 9/10
Making curved gear teeth by face hobbing	B23F 9/105

B23F 21/226

{in exchangeable arrangement}

Definition statement

This place covers:

Examples:

Face milling cutter (US3571876)

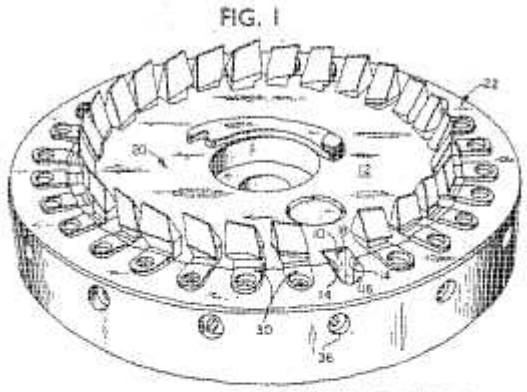

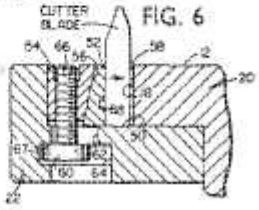

Face milling cutter for face hobbing (US6609858):

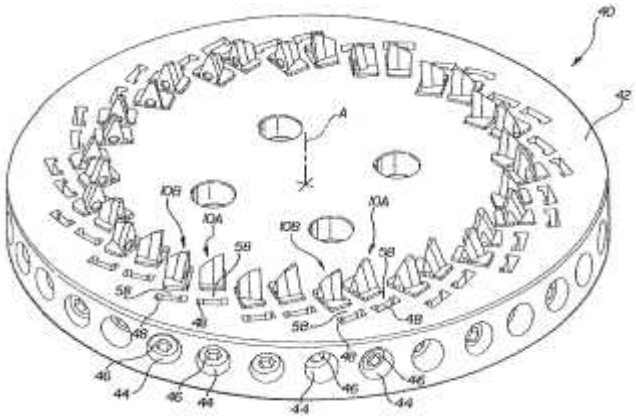

Special rules of classification

Milling tools with teeth arranged on a spiral curve are classified here, regardless of whether continuous generating is explicitly mentioned.

B23F 21/24

Broach-milling tools

Definition statement

This place covers:

Example (GB364012):

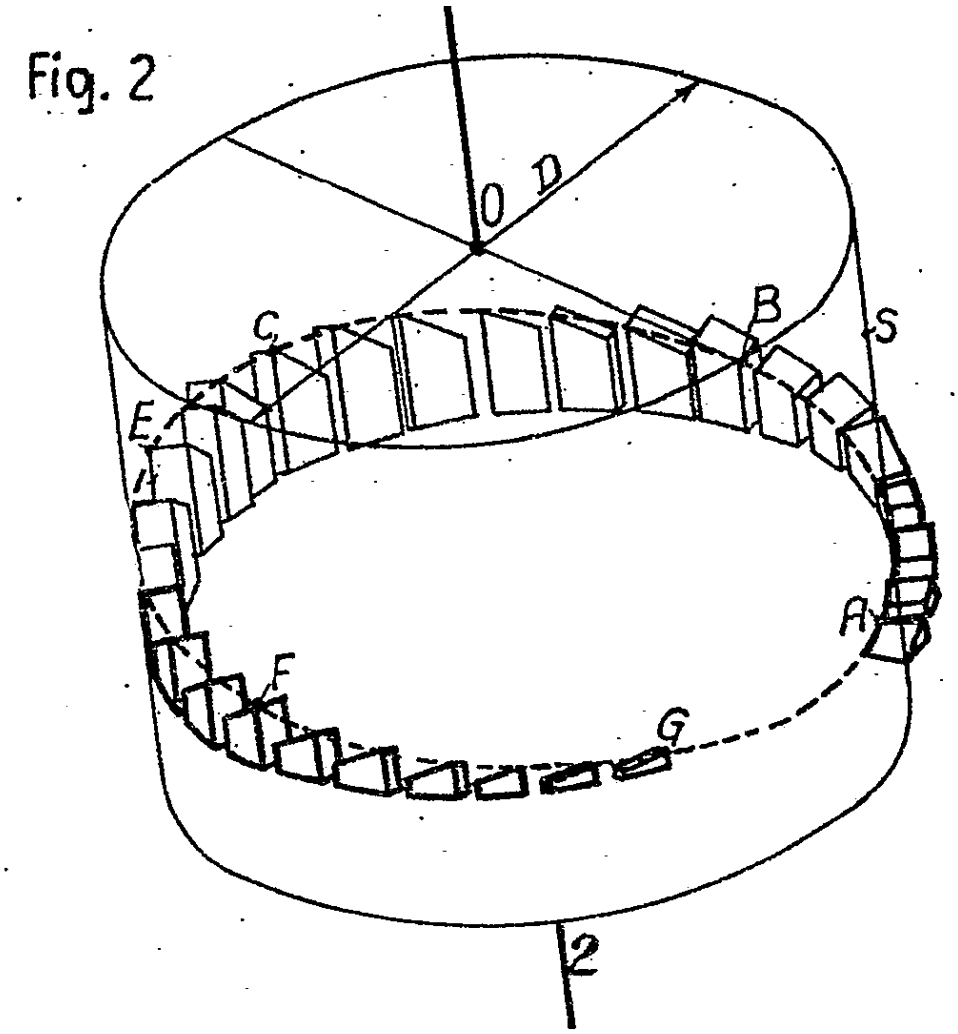

References

Informative references

Attention is drawn to the following places, which may be of interest for search:

Broach-milling of gear teeth using a tool whose profile matches the profile of the required surface	B23F 1/083
Broach-milling straight teeth involving a rolling-off motion	B23F 5/28

B23F 21/26

Broaching tools

Definition statement

This place covers:

Broaching refers to the removal of material in the form of chips from a workpiece by a relative movement between a tool having multiple teeth and a workpiece along a non-circular trajectory. The difference in height between successive teeth on a broaching tool determines the feed and hence the chip thickness

Example (US20040109731)

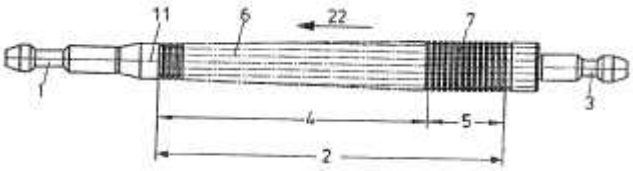

References

Informative references

Attention is drawn to the following places, which may be of interest for search:

Broaching gear teeth using tools where the profile matches the required surface profile	B23F 1/08
Broaching straight teeth using a rolling-off motion	B23F 5/28
Broaching curved gears	B23F 9/003

B23F 21/266

{mounted on an endless chain or belt}

References

Informative references

Attention is drawn to the following places, which may be of interest for search:

Broaching straight teeth with tools mounted on endless belt or chain	B23F 5/285
Broaching curved teeth with tools mounted on an endless belt or chain	B23F 9/006

B23F 21/268

{Pot broaches}

References

Informative references

Attention is drawn to the following places, which may be of interest for search:

Pot broaching using tools whose profile matches that of the required surface	B23F 1/086

B23F 21/28

Shaving cutters

Definition statement

This place covers:

Example (JP62114817):

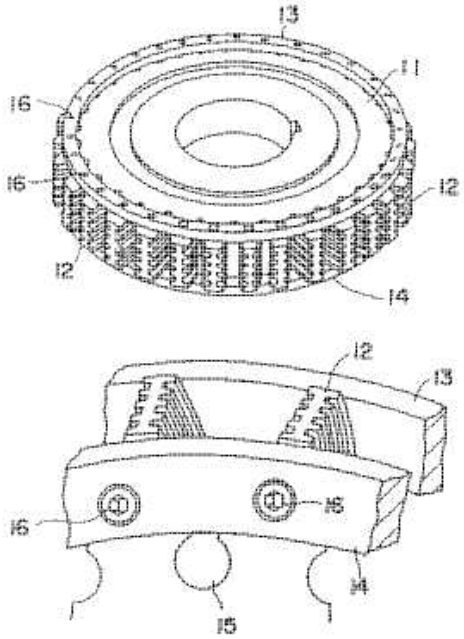

References

Informative references

Attention is drawn to the following places, which may be of interest for search:

Shaving gear teeth	B23F 19/06

B23F 21/286

{having the shape of an internal gear}

Definition statement

This place covers:

Example (JP61030322):

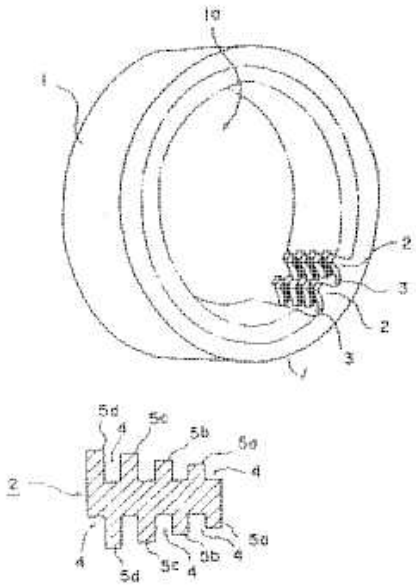

References

Informative references

Attention is drawn to the following places, which may be of interest for search:

Shaving gear teeth using a tool in the shape of an internal gear	B23F 19/063

B23F 23/00

Accessories or equipment combined with or arranged in, or specially designed to form part of, gear-cutting machines (tool-guiding mechanisms, see the relevant groups for making gear teeth; accessories or equipment not restricted to gear-cutting machines B23Q)

Definition statement

This place covers:

Accessories and equipment specially designed to form part of gear cutting machines, e.g.

- generating, indexing and synchronising mechanisms
- loading, unloading and work holding equipment
- Tool holders
- Dressing arrangements for grinding wheels

Examples:

Tool / workpiece contact detecting device (US20030002943)

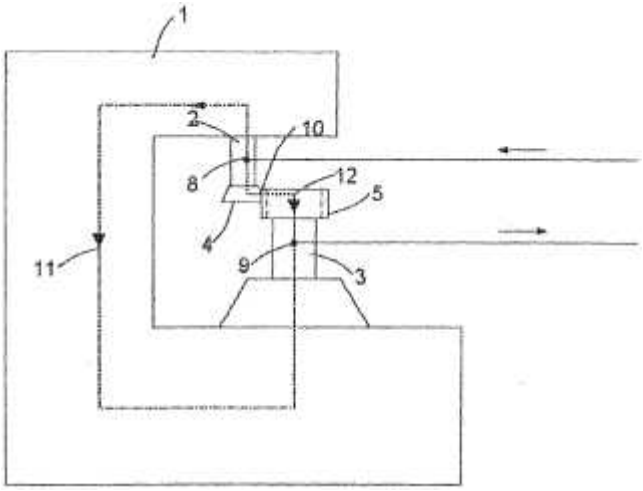

Loading / unloading (US6565418):

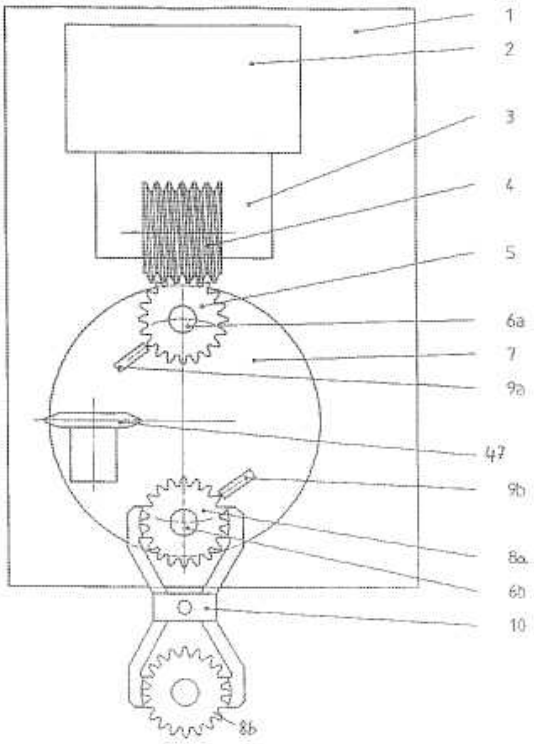

B23F 23/006

{Equipment for synchronising movement of cutting tool and workpiece, the cutting tool and workpiece not being mechanically coupled}

Definition statement

This place covers:

Example (US20050055836):

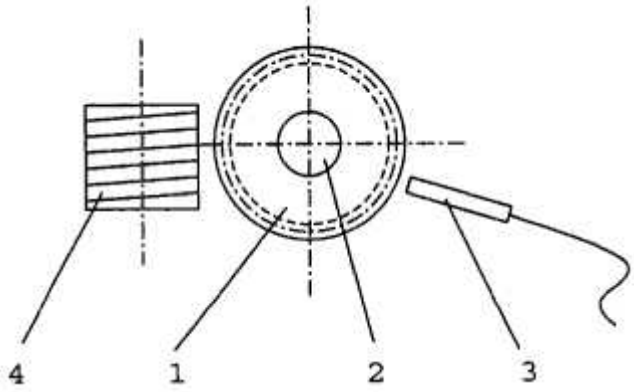

References

Informative references

Attention is drawn to the following places, which may be of interest for search:

Numerical control (NC) of machine tools in general	G05B 19/18

B23F 23/04

Loading {or unloading} arrangements

Definition statement

This place covers:

Example (GB1394518)

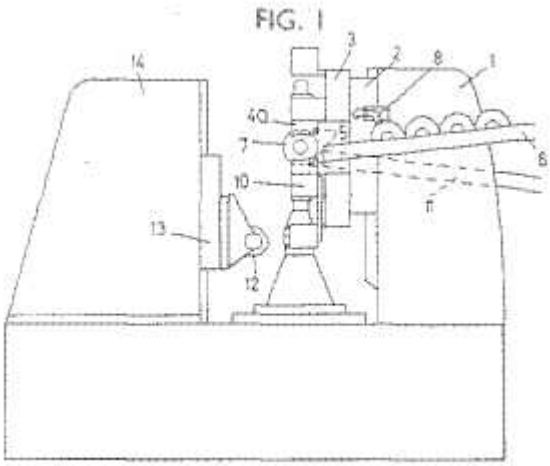

References

Informative references

Attention is drawn to the following places, which may be of interest for search:

Handling work in machine tools in general	B23Q 7/00

B23F 23/06

Chucking arrangements

Definition statement

This place covers:

Example (GB1256167):

FIG. 1

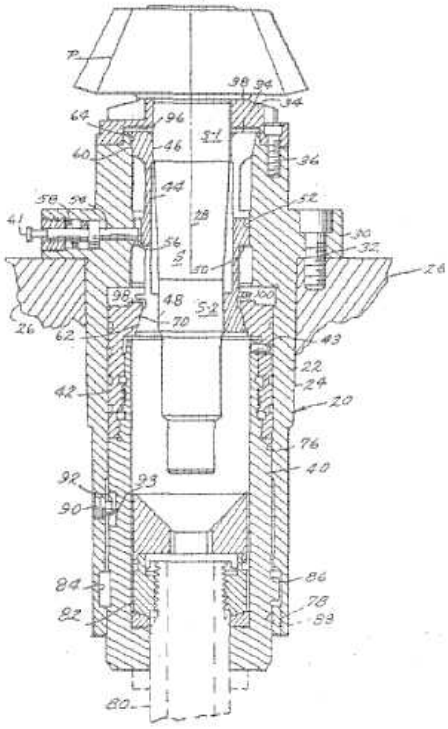

References

Informative references

Attention is drawn to the following places, which may be of interest for search:

Chucks, in general	B23B 31/02

B23F 23/10

Arrangements for compensating irregularities in drives or indexing mechanisms

References

Informative references

Attention is drawn to the following places, which may be of interest for search:

Automatic control and compensation for machine tools, in general	B23Q 15/00

B23F 23/1206

{Tool mountings}

Definition statement

This place covers:

Tool mountings refers to devices, or parts of devices for mounting or clamping the tool, for example (but not limited to) arbours or mandrels, such that the tool can then be held by a tool holder which connects the cutting tool to the machine tool.

References

Informative references

Attention is drawn to the following places, which may be of interest for search:

Workpiece mounting, e.g. chucking arrangements	B23F 23/06
Gear cutting tool holders	B23F 23/1237

B23F 23/1218

{Checking devices for controlling workpieces in machines for manufacturing gear teeth}

Definition statement

This place covers:

Example (US5174070):

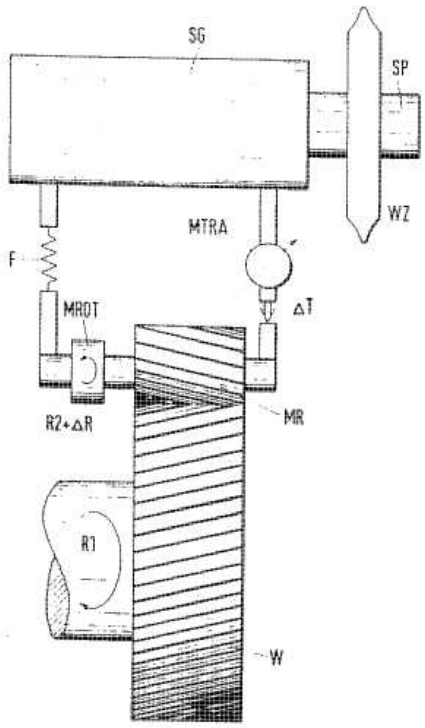

References

Informative references

Attention is drawn to the following places, which may be of interest for search:

Measuring arrangements using mechanical means for measuring contours of gears	G01B 5/202
Measuring arrangements using electrical or magnetic means for measuring contours of gears	G01B 7/283
Testing of gearings	G01M 13/021

B23F 23/1225

{Arrangements of abrasive wheel dressing devices on gear-cutting machines (dressing devices per se B24B 53/00)}

Definition statement

This place covers:

Example (US217409

workpiece (20), tool (36), dressing tool (42)

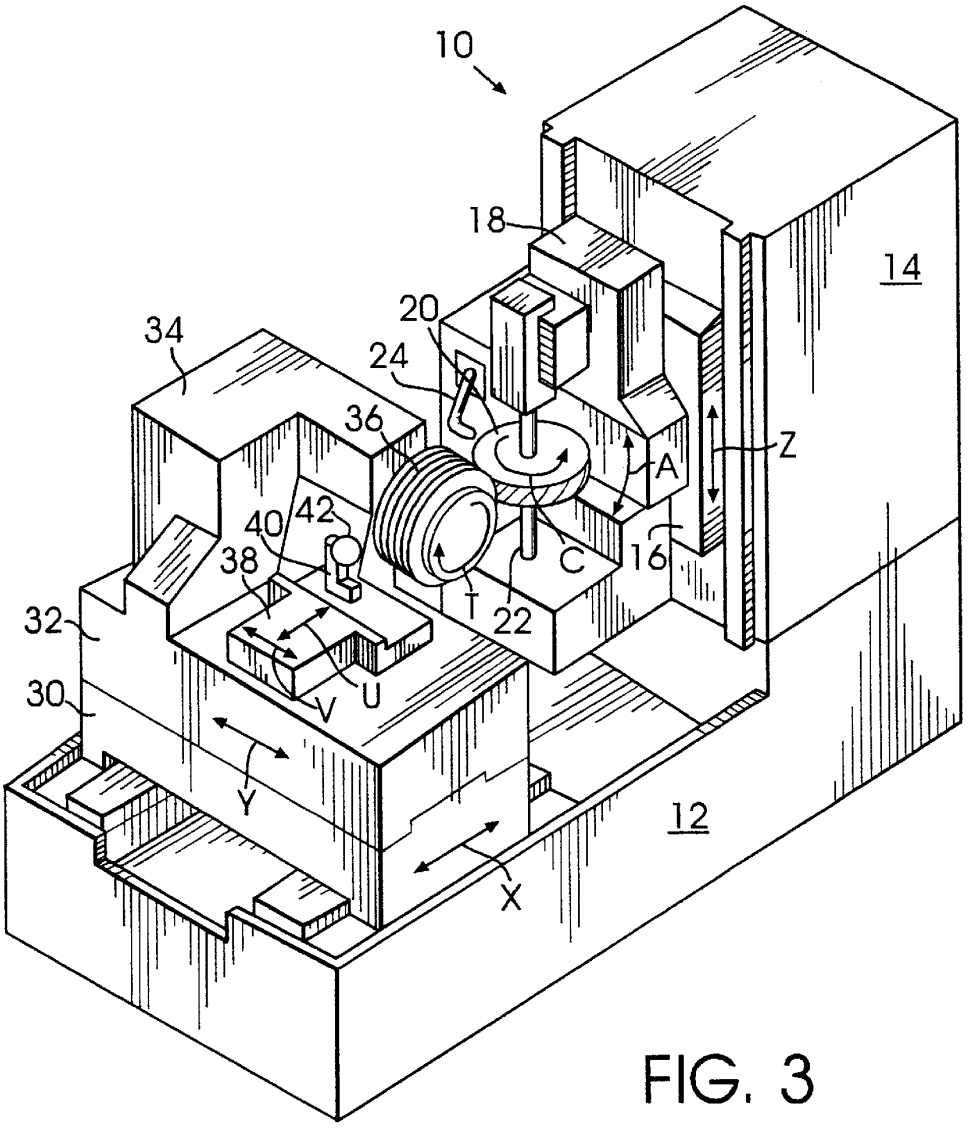

FIG. 3

B23F 23/1231

{using a gear-shaped dressing tool}

Definition statement

This place covers:

Example (JP20060035421)

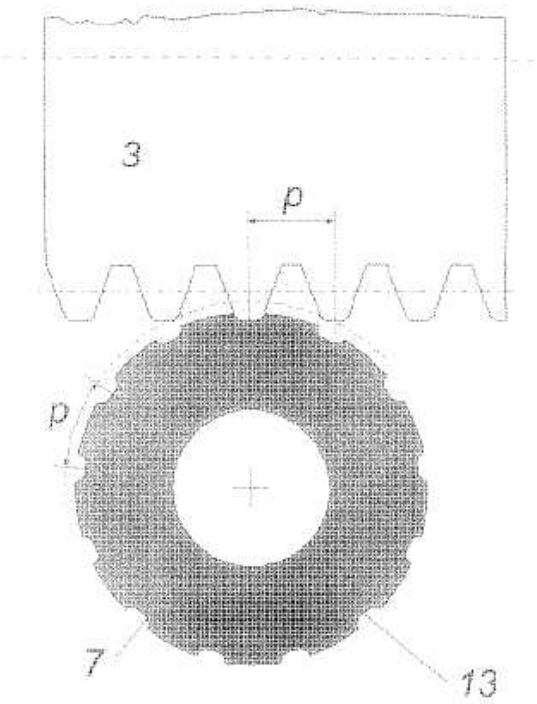

B23F 23/1243

{Hob holders}

Definition statement

This place covers:

Example (DE1020090039752)

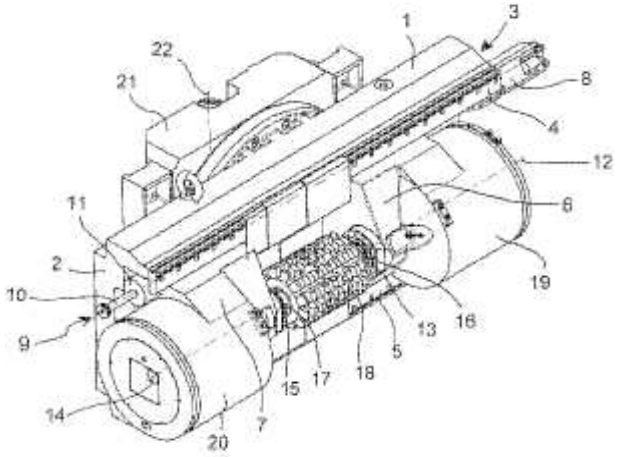

References

Informative references

Attention is drawn to the following places, which may be of interest for search:

Hobs for manufacturing gear teeth	B23F 21/16

B23F 23/125

{Face mill holders}

References

Informative references

Attention is drawn to the following places, which may be of interest for search:

Face-milling tools for cutting curved teeth	B23F 21/22

B23F 23/1256

{Rack cutter holders}

References

Informative references

Attention is drawn to the following places, which may be of interest for search:

Planing or slotting tools having the same profile as a tooth or teeth of a rack	B23F 21/08

B23F 23/1262

{Grinding disc holders; Disc-type milling-cutter holders}

Definition statement

This place covers:

Example (DE3415498):

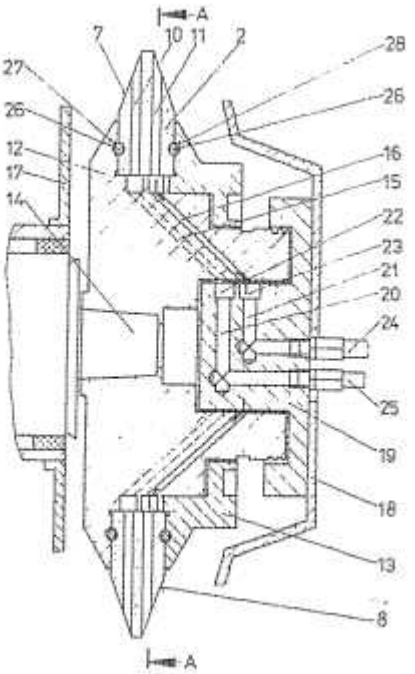

References

Informative references

Attention is drawn to the following places, which may be of interest for search:

Grinding discs for use in gear manufacturing machines	B23F 21/02
Profile cutters of disc type for use in gear manufacturing machines	B23F 21/14
Securing milling cutters to the driving spindle, in general	B23C 5/26

B23F 23/1268

{Face-mill-type grinding wheel holders}

References

Informative references

Attention is drawn to the following places, which may be of interest for search:

Face mill type grinding wheels for use in gear cutting machines	B23F 21/023

Synonyms and Keywords

In patent documents, the following words/expressions are often used as synonyms:

- " Face mill type grinding wheel" and "cup-shaped grinding wheel "

B23F 23/1275

{Grinding or honing worm holders}

References

Informative references

Attention is drawn to the following places, which may be of interest for search:

Grinding worms for use in gear manufacturing machines	B23F 21/026
Honing worms for use in gear manufacturing machines	B23F 21/035

B23F 23/1281

{Honing, shaving or lapping tool holders}

References

Informative references

Attention is drawn to the following places, which may be of interest for search:

Honing tools for use in gear manufacturing machines	B23F 21/03
Shaving tools for use in gear manufacturing machines	B23F 21/28

B23F 23/1287

{Pinion shaper cutter holders}

References

Informative references

Attention is drawn to the following places, which may be of interest for search:

Pinion shaped cutters for use in gear manufacturing machines	B23F 21/10