A63F

CARD, BOARD, OR ROULETTE GAMES; INDOOR GAMES USING SMALL MOVING PLAYING BODIES; VIDEO GAMES; GAMES NOT OTHERWISE PROVIDED FOR

Definition statement

This subclass covers:

- Games including card games, board games, roulette games, indoor games using small moving playing bodies, e.g. pinball games, miscellaneous games, e.g. puzzle games.
- Video games, i.e. games using an electronically generated display having two or more dimensions, e.g. on a television screen, showing representations related to the game.

References relevant to classification in this subclass

This subclass does not cover:

Casino chips	A44C 21/00
Sport games	A63B
Bowling games, games of pins, billiards	A63D
Video games, online or networked video games	A63F 13/00
Guns (laser guns, water guns, etc.), targets, darts	F41A, F41B, F41C, F41J, F42B
Vending machines	G07F
Data-processing equipment characterised by a specific application for game playing	G06F 17/00
Casino gaming machines, slot machines, medal game machines, coin pushers, online or networked gaming systems	G07F 17/32
Educational games, i.e. games having educative or pedagogical purpose	G09B

Informative references

Attention is drawn to the following places, which may be of interest for search:

Animal toys	A01K 15/025
Nursery furniture	A47D
Household or table equipment	A47G
Toys	A63H
Robots	B25J
Cards in general (trading cards, postcards, etc.)	B42D
Ornamental bodies	B44C 5/00
Children's cycles	B62K 9/00
Packages	B65D
Digital computing in general	G06C
Data-processing equipment characterised by a specific application for game playing	G06F 17/00, G06F 19/00
Generating random numbers; lottery apparatus	G07C 15/00
Advertising or display means	G09F

Music devices	G10H

A63F 1/00

Card games (aspects of games using an electronically generated display having two or more dimensions showing representations related to the game A63F 13/00; card games played on a gaming machine G07F 17/32)

Definition statement

This group covers:

Any game using playing cards as the primary device with which the game is played.

References relevant to classification in this group

This group does not cover:

Aspects of games using an electronically generated display having two or more dimensions showing representations related to the game	A63F 13/00
Online card games	G07F 17/32
Computer-implemented, simulated card games, e.g. video poker	G07F 17/329

Informative references

Attention is drawn to the following places, which may be of interest for search:

Educational card game (ex.: US7029281)	G09B 19/22

A63F 1/02

Cards; Special shapes of cards (card-printing methods B41K, B41M)

Definition statement

This subgroup covers:

Playing cards used with card games; special shapes of playing cards used with card games or other games.

References relevant to classification in this group

This subgroup does not cover:

Card-printing methods	B41K, B41M

Informative references

Attention is drawn to the following places, which may be of interest for search:

Cards in general (trading cards, business cards, postcards, greeting cards, etc.)	B42D
Overlapping transparent elements with an opaque part	A63F 2009/062

A63F 1/04

Card games combined with other games

Definition statement

This subgroup covers:

- Card games combined with other games;
- Cards played in a game which is not a card game as such, i.e. in a game involving other primary playing supports than sole cards.

A63F 1/06

Card games appurtenances

Definition statement

This subgroup covers:

Card games appurtenances and accessories for card games.

A63F 3/00

Board games; Raffle games (racing games, traffic games, or obstacle games characterised by figures moved by action of the players A63F 9/14)

Definition statement

This group covers:

- Board games, i.e. any game in which counters or "playing pieces" are placed, removed, or moved on a generally premarked surface or "game board" according to a set of rules. Examples of board games: game of goose, chess, scrabble(R).
- Raffle games, i.e. any game in which people obtain tickets, each ticket having the chance of winning a prize, e.g. lottery games. Examples of raffle games: lottery, lotto, bingo.

Relationship between large subject matter areas

In a board game (A63F 3/00) the playing piece or counter is moved according to a set of rules (e.g. according to the face value of a dice), usually directly by the playing touching or handling the playing piece with the relevance put on the strategy, whereas in a game classified in A63F 7/00, the "moving playing body" is moving by itself, or moved by action of a physical force (gravity, projecting device, etc.), with the relevance put on the movement itself. Generally, when playing pieces are rolling on a board, the right group is A63F 7/00.

References relevant to classification in this group

This group does not cover:

Roulette games	A63F 5/00
Indoor games using small moving playing bodies	A63F 7/00
Racing games, or obstacle games characterized by figures moved by action of the players	A63F 9/14

Informative references

Attention is drawn to the following places, which may be of interest for search:

Miscellaneous games not otherwise provided for	A63F 9/00 - A63F 9/20

Special rules of classification within this group

Generally, multiple classification is necessary: according to the type of game and according to the relevant technical characteristics. For example, a backgammon with illumination (DE202010009233U) is classified in both A63F 3/00151 and A63F 2003/00646.

For trivia board games (aspects of a question-and-answer game), add the Indexing Code A63F 9/18.

The board games are classified under A63F 3/00-A63F 3/04. The raffle games are classified under A63F 3/06-A63F 3/08.

The type of board game is classified under A63F 3/00003, or in A63F 3/02 (chess-like board games) or A63F 3/04 (educational board games).

The mechanical characteristics of the game board of any game type are classified under A63F 3/00173. The playing pieces of any game type are classified under A63F 3/00697. The electrical features of any game type are classified under A63F 3/00643.

The magnetic game boards of any type are classified in A63F 3/00694.

The accessories for game boards are classified under A63F 3/00895.

Synonyms and Keywords

In patent documents the following expressions/words "board game", "parlor game" (EN)," Brettspiel", "Gesellschaftsspiel" (DE) and " jeu de société", "jeu de plateau" (FR) are often used as synonyms.

A63F 3/00157

{Casino or betting games (horse races A63F 3/00082)}

Definition statement

This subgroup covers:

Casino or betting board games and board games involving betting.

References relevant to classification in this group

This subgroup does not cover:

Lottery games, raffle games	A63F 3/06- A63F 3/08
Roulette games	A63F 5/00
Computarized casino or wagering games and systems	G07F 17/32

A63F 2003/00164

{Casino tables}

Definition statement

This subgroup covers:

Tables for casino games.

References relevant to classification in this group

This subgroup does not cover:

Chip identification on gaming table	A44C 21/00
Gaming table as piece of furniture	A47B 25/00

Gaming table having an inductive interface	G07F 17/32
Table game control system	G07F 17/329
Gambling table monitoring system	G07F 17/329
Bet tracking system for gaming tables	G07F 17/329

A63F 2003/00227

{with five play locations and optionally a sixth in the middle}

Definition statement

This subgroup covers:

Games for several participants, with game pieces and a throw able unit with plane faces carrying different symbols (dice), comprises a hollow component with a through hole and several blind holes.

E.g. Game comprising a rectangular or cylindrical wooden box with a lid having five holes and one through hole.

Popular in Germany, therefore principally from German patents.

A63F 2003/00258

{rollable, flexible or deformable board (shaped as an endless belt A63F 2003/00321; flexible rim A63F 2003/00504)}

References relevant to classification in this group

This subgroup does not cover:

Game boards shaped as an endless belt	A63F 2003/00321
Flexible rims	A63F 2003/00504

Special rules of classification within this group

Possibly add Indexing Code A63F 2250/18 (Use of resilient or deformable elements) or A63F 2250/183 (Foam).

A63F 2003/00274

{with or designed as a turntable, lazy Susan}

Synonyms and Keywords

In patent documents the following expressions/words " turntable", "lazy Susan" (EN),"Drehteller", "Drehplatte" (DE) and "plateau tournant" (FR) are often used as synonyms.

A63F 2003/0041

{with playing pieces visible from both sides}

Definition statement

This subgroup covers:

For example the game "connect four".

Synonyms and Keywords

In patent documents the following expressions/words " connect four", "connect 4" (EN),"vier gewinnt", "4 gewinnt" (DE) and " puissance 4" (FR) are often used as synonyms.

A63F 3/00643

{Electric board games; Electric features of board games (electric word or number games A63F 3/0421; computer chess G06F; electric raffle games A63F 3/081)}

Definition statement

This subgroup covers:

Electric features of any board game.

References relevant to classification in this group

This subgroup does not cover:

Electric word or number board games	A63F 3/0421
Electric lottery games and tickets	A63F 3/0645
Electric raffle games	A63F 3/081
Computer chess	G06F

Informative references

Attention is drawn to the following places, which may be of interest for search:

Electric games not otherwise provided for	A63F 9/24

Special rules of classification within this group

Electric or electronic details not to be found under A63F 3/00643 can be classified under the Indexing Codes A63F 9/24. For example, aspects of radiofrequency identification (RFID) in board games are given the Indexing Code A63F 2009/2489.

A63F 2003/00665

{using inductance}

Definition statement

This subgroup covers:

For example: inductive coils in the board, magnets in the playing pieces inducing signals in the coils.

Synonyms and Keywords

In patent documents the following expressions/words " inductance coil", "inductor coil", "coil", "solenoid", "inductor" (EN), "Spule", "Induktor" (D) and "bobine d'induction" (FR) are often used as synonyms.

A63F 2003/00668

{using hall effect}

Glossary of terms

In this subgroup, the following terms (or expressions) are used with the meaning indicated:

Hall effect	Non-uniformity of the electric conduction in a conductor caused by magnetisation normal to the current density vector. The latter, instead of being parallel to the electric field, forms an angle with it

Synonyms and Keywords

In patent documents the following expressions/words " Hall effect (EN)", "Halleffekt", "Hall-Effekt", "Hallscher Effekt", "Hal'scher Effekt (D " and "effet Hall (FR " are often used as synonyms.

A63F 2003/00675

{Reed relay}

Glossary of terms

In this subgroup, the following terms (or expressions) are used with the meaning indicated:

Reed relay	type of relay that uses an electromagnet to control one or more reed switches
Reed switch	electrical switch operated by an applied magnetic field. It consists of a pair of contacts on ferrous metal reeds in a hermetically sealed glass envelope. The contacts may be normally open, closing when a magnetic field is present, or normally closed and opening when a magnetic field is applied. The switch may be actuated by a coil, making a reed relay - or by bringing a magnet near to the switch. Once the magnet is pulled away from the switch, the reed switch will go back to its original position.

Synonyms and Keywords

In patent documents the following expressions/words "reed relay" (EN),"Reedkontakt", "Herkonkontakt", "Zungenrelais" (D) and "relai mouillé à anche", "relai à lame(s) vibrante(s)" (FR) are often used as synonyms.

A63F 3/00694

{Magnetic board games (other games using magnetically moved or magnetically held pieces A63F 9/34)}

Definition statement

This subgroup covers:

Board games having magnetic components.

Informative references

Attention is drawn to the following places, which may be of interest for search:

Other games using magnetically moved or magnetically held pieces	A63F 9/34

Special rules of classification within this group

The board games having magnetic characteristics are not necessary all classified in A63F 3/00694. Only when the magnetic aspect is essential are these classifications given.

The magnetic aspects of board games are detailed in the following Indexing Codes, depending more precisely on the parts (parts of the board , supporting structure, playing pieces, accessories) between which a magnetic force is involved:

- A63F 2003/00391 magnetic connection between modules constituting the game board;
- A63F 2003/00927 magnetic instrument for handling a play piece (e.g. a wand for moving on or taking out a playing piece from the playing surface);
- A63F 2003/0093 magnetic instrument for handling a play piece, acting through a cover;
- A63F 2003/00545 magnetic connection between game board and supporting structure;
- A63F 2003/0063 magnetic connection between game board and playing pieces;
- A63F 2003/00738 magnetic connection amongst playing pieces (e.g. magnetically stackable playing pieces)
- A63F 2003/00662 and under for magnetic field sensors (with sub codes for "using inductance", "using hall effect" and "reed relay").
- possibly (but more rarely) Indexing Code A63F 3/00694 when the magnetic aspect is not essential and does not concern any connection where another code is already existing.

the " shogun"-type board games*, where the playing pieces comprise a changeable display by means of a (rotatable) magnet, are classified in the following group and Indexing Code in combination: A63F 2003/00826 and A63F 3/00694.

(*The "shogun" game comprises particular playing pieces which could change the value marked thereon depending on the field where they were landing on. The mechanism was a rotating magnet in the playing piece and hidden magnets in the board. Examples: DE2718756, EP1813323, US3406974, DE202006017774U).

A63F 3/00697

{Playing pieces}

Definition statement

This subgroup covers:

Playing pieces for board games.

References relevant to classification in this group

This subgroup does not cover:

Casino chips	A44C 21/00

Informative references

Attention is drawn to the following places, which may be of interest for search:

Tiles for tessellation games, e.g. mosaic games, possibly using a particular shape of tile	A63F 9/0669

A63F 3/00895

{Accessories for board games (A63F 3/00697 takes precedence; game accessories of general use A63F 11/00)}

Definition statement

This subgroup covers:

Any accessory used in combination with a board game.

References relevant to classification in this group

This subgroup does not cover:

Cards	A63F 1/04
Dispensing or collecting devices for token or chips	A63F 11/0002
Chance selectors, e.g. spinners	A63F 2011/0016
Tools, e.g. hammers	A63F 11/0025
Indicators of values, e.g. score counters	A63F 11/0051
Playing pieces for board games	A63F 3/00697
Dice	A63F 9/04
Marker or means for drawing, e.g. pen, pencil, chalk	A63F 9/0641

Informative references

Attention is drawn to the following places, which may be of interest for search:

Game accessories of general use	A63F 11/00

Special rules of classification within this group

Accessories specially adapted for board games for which a group exists in another place of the scheme (e.g. spinners, cf. limiting references) are given both the group A63F 3/00895 and the group of this other place.

A63F 2003/00987

{with a table-flap}

Synonyms and Keywords

In patent documents the following expressions/words "table-flap" (EN), "Klappdeckel" (D) and "abattant" (FR) are often used as synonyms.

A63F 2003/0418

{with a grid, e.g. 'Sudoku'-type games}

Definition statement

This subgroup covers:

Any number board game comprising a grid of numbers, e.g. for playing 'Sudoku'-type games. Also: any logical board game equivalent to Sudoku, in which the numbers are replaced with other symbols, e.g. different colors.

For example DE202006012844U.

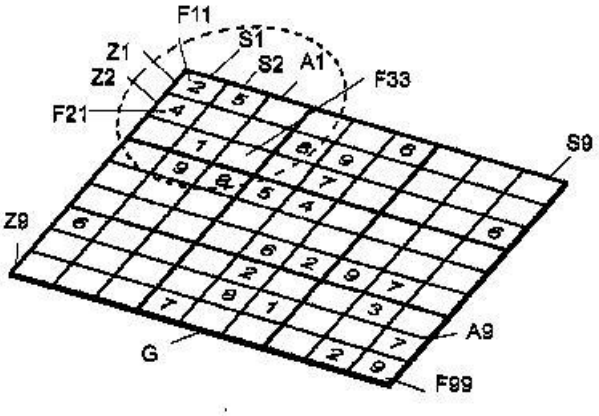

Glossary of terms

In this subgroup, the following terms (or expressions) are used with the meaning indicated:

Grid	a figure composed of uniformly spaced horizontal and perpendicular lines.
Sudoku	a puzzle in which several numbers are to be filled into a 9x9 grid of squares so that every row, every column, and every 3x3 box contains the numbers 1 through 9.

Synonyms and Keywords

In patent documents the following expressions/words "grid" (EN),"Kästchen" (D), "grille" (FR), "quadrillage" (FR) and "cases" (FR) are often used as synonyms.

A63F 3/0423

{Word games, e.g. scrabble (electric A63F 3/0421; two-dimensional puzzles with rotating rings or discs A63F 9/0811, A63F 9/0819)}

References relevant to classification in this group

This subgroup does not cover:

Electric word games	A63F 3/0421

Informative references

Attention is drawn to the following places, which may be of interest for search:

Word or number games	A63F 9/0098
Two-dimensional puzzles with rotating rings or discs	A63F 9/0811, A63F 9/0819

A63F 2003/0428

{Crosswords}

Synonyms and Keywords

In patent documents the following expressions/words "crosswords", "word-search puzzles", "hidden words" (EN),"Kreuzworträtsel" (D), "mots croisés" (FR) and "mots cachés" (FR) are often used as synonyms.

A63F 3/06

Lottos or bingo games; Systems, apparatus or devices for checking such games {(small boxes with balls used for generating random numbers A63F 7/048; lottery apparatus G07C 15/00; lottery gaming stations, online lottery or bingo G07F 17/329; printing processes for lottery tickets B41M 3/005)}

Definition statement

This subgroup covers:

Lottery games, bingo games, football pools and the like; Associated devices and accessories for playing or checking such games.

Further details of subgroups

A63F 3/0605-A63F 3/062 cover the type of game: Lottery games (A63F 3/0605), lottos (A63F 3/061), football pools (A63F 3/0615), bingo games (A63F 3/062). A63F 3/0625 and A63F 3/065 cover more precisely the devices for filling-in, checking, the tickets and accessories therefor.

References relevant to classification in this group

This subgroup does not cover:

Lottery-type interactive games of chance	G07C 15/00
Lottery apparatus, i.e. apparatus for drawing the balls in a lottery game	G07C 15/001
Lottery games played on a gaming machine, gaming computer or terminal	G07F 17/329

Informative references

Attention is drawn to the following places, which may be of interest for search:

Layered products	B32B 7/12
Printing of lottery tickets	B41M 3/005

Special rules of classification within this group

Balls for lottery apparatus: classified in A63F 9/0415 and Indexing Codes A63F 2009/0466 and A63F 3/061 .

"Instant" lottery games, in which the ticket has a message becoming legible after an action of the player (e.g. scratch-off lottery games), are usually classified only in A63F 3/0665 - A63F 3/069 (with the ticket).

Glossary of terms

In this subgroup, the following terms (or expressions) are used with the meaning indicated:

Lottery apparatus	apparatus for drawing the balls in a lottery game

Synonyms and Keywords

In patent documents the following expressions/words " Lottery apparatus " (EN),"Lotto-Toto-Glückmaschine" (G07C 15/001) (D)" and "machine de tirage des boules du loto" (FR) are often used as synonyms.

A63F 3/0605

{Lottery games}

Definition statement

This subgroup covers:

A form of gambling games in which many people purchase chances, called lottery tickets. Generally the winning tickets are drawn from a pool composed of all tickets sold (sweepstakes) or offered for sale, or consisting of all of or most of the possible permutations of the numbers or symbols used on the tickets.

The classic lotteries are with pre-printed numbers or symbols on the tickets.

References relevant to classification in this group

This subgroup does not cover:

Devices for generating the winning numbers of a lottery game	G07C 15/00

Synonyms and Keywords

In patent documents the following expressions/words " playslip", "grid" (EN) and " grille de loto" (FR) " are often used as synonyms.

A63F 3/061

{in which the players select their own numbers, e.g. Lotto}

Definition statement

This subgroup covers:

Lottery games in which the bettors can choose their own numbers (from an acceptable pool).

In most lottos, the player fills out a playslip with his/her selected numbers. The playslip is then read on a terminal which records the selected numbers and generates a ticket.

A63F 3/0615

{based on sporting events, e.g. football pools}

Definition statement

This subgroup covers:

Lottery games based on outcome of a sporting event.

References relevant to classification in this group

This subgroup does not cover:

Methods and systems for presenting pari-mutuel (PMU) betting options and construction wagers	G07F 17/329

Special rules of classification within this group

Add Indexing Code A63F 2011/0097 if watching television is part of the game.

Synonyms and Keywords

In patent documents the following abbreviation are often used:

PMU	pari mutuel urbain

In patent documents the following expressions/words " football pool", "Pools", "forecasting/guessing results in competitions/sporting events/matches" (EN),"Toto, Sport Toto (D)" and "loto sportif, jeu de pronostics sportifs (FR)" are often used as synonyms.

A63F 3/062

{Bingo games, e.g. Bingo card games}

Definition statement

This subgroup covers:

Games of chance in which each player has one or more cards (bingo cards or bingo game boards) printed with differently numbered squares on which to place markers when the respective numbers are drawn and announced by a caller. The first player to mark a complete row of numbers (or other winning pattern) is the winner. Examples of design of a bingo card:

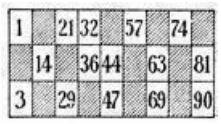

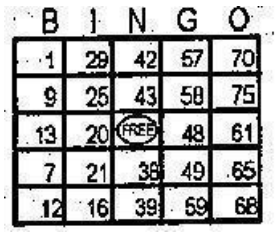

Bingo cards optionally include a free indicia that is considered a match in any pattern including said free indicia.

References relevant to classification in this group

This subgroup does not cover:

Online bingo games	G07F 17/329
Bingo-like slot machines	G07F 17/329

Synonyms and Keywords

In patent documents the following expressions/words " bingo card game, Bingo, also sometimes called lotto (EN)" and " jeu de loto [le classique "loto des pompiers" avec quines et cartons pleins (FR) " are often used as synonyms.

A63F 3/065

{Tickets or accessories for use therewith (A63F 3/0625 takes precedence)}

References relevant to classification in this group

This subgroup does not cover:

Devices for filling-in or checking	A63F 3/0625
Printing of lottery tickets	B41M 3/005

Informative references

Attention is drawn to the following places, which may be of interest for search:

Marking means, e.g. pencils	A63F 9/0641
Postcards, freeting. menu. business or like cards; letter cards or letter-sheets with peel-away layer hiding information	B42D 15/025

Special rules of classification within this group

Tickets for lotto or bingo games referring to security aspects are allocated also the Indexing Code A63F 2250/58 "antifraud or preventing misuse".

Holograms in lottery tickets: add Indexing Code A63F 2250/302.

A63F 3/0665

{having a message becoming legible after rubbing-off a coating or removing an adhesive layer (for educational purposes G09B)}

Informative references

Attention is drawn to the following places, which may be of interest for search:

Educational games having a message becoming legible after rubbing-off a coating or removing an adhesive layer, for educational purposes	G09B

Synonyms and Keywords

In patent documents the following expressions/words "lottery scratch tickets", "scratch-off tickets/ layers ","removable layer" and "instance lottery games" are often used as synonyms.

A63F 3/0685

{having a message becoming legible after a chemical reaction or physical action has taken place, e.g. applying pressure, heat treatment, spraying with a substance, breaking microcapsules (use of microcapsules for duplicating paper B41M 5/165)}

Informative references

Attention is drawn to the following places, which may be of interest for search:

Use of microcapsules for duplicating paper	B41M 5/165

Special rules of classification within this group

Fluorescence signature in lottery ticket: group A63F 3/0685 and Indexing Code A63F 2250/423.

A63F 3/08

Raffle games that can be played by a fairly large number of people {(A63F 3/0625, A63F 3/065 take precedence; lottery apparatus G07C 15/00; lottery gaming stations, online lottery or bingo G07F 17/329)}

Definition statement

This subgroup covers:

A form of gambling competition playable simultaneously by a large number of people, e.g. remotely playable via radio or Internet, in which people obtain numbered tickets, each ticket having the chance of winning a prize.

References relevant to classification in this group

This subgroup does not cover:

Devices for filling-in or checking such games	A63F 3/0625
Tickets or accessories for use with such games	A63F 3/065
Lottery apparatus	G07C 15/00
Computer programs and networked systems for playing a raffle game	G07F 17/32

A63F 5/00

Roulette games (aspects of games using an electronically generated display having two or more dimensions showing representations related to the game A63F 13/00)

Definition statement

This group covers:

- Roulette games, that is any game of chance in which a rotating wheel or disc, the roulette wheel, determines the criteria for winning the game.
- Classical roulette games, that is games of chance where the landing position of a ball in pockets distributed around a rotating wheel determines the criteria for winning the game, are classified in A63F 5/00.
- Other roulette-like ball games, e.g. with holes distributed over the entire surface of the roulette wheel, are for A63F 5/02.

- Roulette games without ball are for A63F 5/04.

References relevant to classification in this group

This group does not cover:

Aspects of games using an electronically generated display having two or more dimensions showing representations related to the game	A63F 13/00
Gaming systems with roulette anddata processing, networked roulette gaming devices	G07F 17/32
Coin-operated roulette games	G07F 17/34
Mechanical (and computerized) reel-type gaming machine,Rotating disks slot machine	G07F 17/3213

Special rules of classification within this group

Relevant details about the playing surface, the ball launcher, the ball itself, etc., not present in the classification scheme A63F 5/00 have to be classified in the scheme A63F 7/00.

Relevant details about sensors, electronic displays, etc. have to be classified under Indexing Codes A63F 9/24.

The groups A63F 5/0011 - A63F 5/0094 can be used in combination with any type of roulette games, that is also in combination with A63F 5/02 and A63F 5/04.

The devices for launching the ball of a roulette game are classified both under A63F 7/24 and in A63F 5/00.

The ball return mechanisms for roulette game are classified both in group A63F 5/00 and Indexing Code A63F 2007/345.

The devices using air jets for propelling the ball are classified both in A63F 2009/0087 and A63F 5/00.

A63F 5/0005

{Automatic roulette}

Definition statement

This subgroup covers:

Roulette wheels in which the ball is automatically put in play.

Example of automatic roulette wheel:

An automatic roulette wheel in which at the end of a turn the wheel is accelerated and the ball is ejected from the pocket under centrifugal force and moves to the top of the ball track.

A63F 5/007

{Details about the compartments or sectors, e.g. sectors having different sizes}

Synonyms and Keywords

In patent documents the following expressions/words "Compartment", "(landing) sector", "pocket "and "canoe" are often used as synonyms.

A63F 5/0088

{with a plurality of balls used during one game}

References relevant to classification in this group

This subgroup does not cover:

Lottery apparatus with balls	G07C 15/001

A63F 5/04

Disc roulettes; Dial roulettes; Teetotums; Dice-tops

Definition statement

This subgroup covers:

Roulette games without ball.

Informative references

Attention is drawn to the following places, which may be of interest for search:

Dices	A63F 9/04
Spinning top games used as random generator	A63F 9/16, A63F 2009/165
Tops	A63H 1/00

Synonyms and Keywords

In patent documents the following expressions/words "carousel wheel", "spinning wheel", "dial (EN)" and "Wählscheibe (D)" are often used as synonyms.

A63F 5/041

{Teetotums; Dice-tops}

Definition statement

This subgroup covers:

- Any spinning top used as a die.
- A dice-top or teetotum has generally a polygonal body marked with letters or numbers, which indicate the result of each spin.

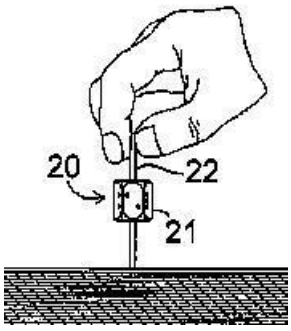

Informative references

Attention is drawn to the following places, which may be of interest for search:

Dice	A63F 9/04
Tops involved in a game, usually combined with a rolling board or involving a plurality of tops (spinning-top games)	A63F 9/16
Tops as such	A63H 1/00

Special rules of classification within this group

The number of faces of the dice-top, when relevant, should be classified under Indexing Codes A63F 9/0415.

A63F 5/045

{using a rotating wheel and a fixed indicator, e.g. fortune wheels}

Definition statement

This subgroup covers:

Fortune wheel, to be understood as using a rotating wheel with a fixed indicator (with optionally a friction stop).

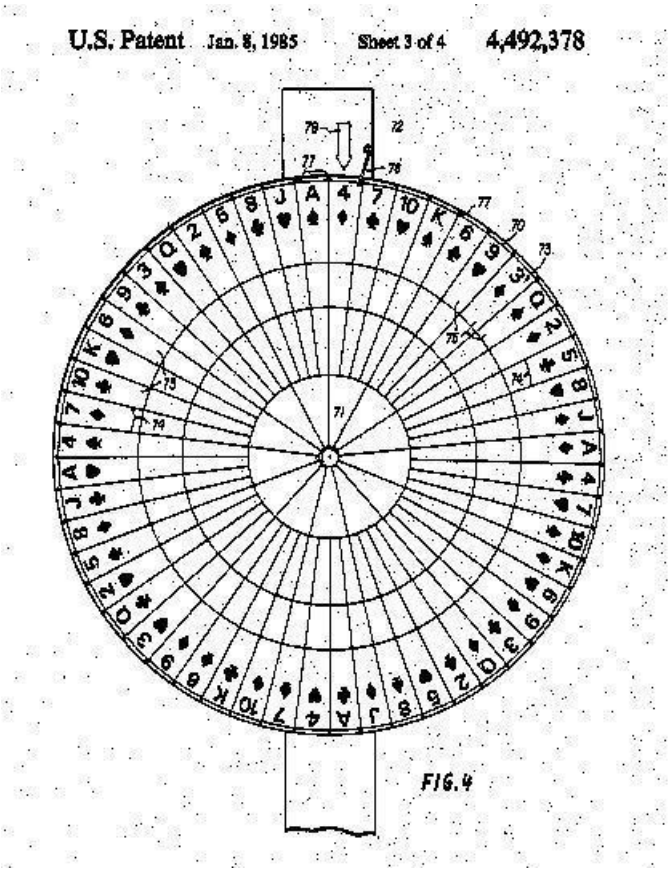

In a spinner (A63F 11/0011, Indexing Code A63F 2011/0016) a pointer rotates, possibly relatively to a fixed disc, whereas in a fortune wheel (A63F 5/045) a disc rotates relatively to a fixed pointer.

Synonyms and Keywords

In patent documents the following expressions/words " Fortune wheel", "wheel of chance", "wheel of Fortune (EN)"," roue de la fortune(FR)" and " Glücksrad (DE)" are often used as synonyms.

A63F 7/00

Indoor games using small moving playing bodies, e.g. balls, discs or blocks (board games, raffle games A63F 3/00; roulette games A63F 5/00; miniature bowling games A63D 3/00; bagatelle or similar games A63D 13/00; billiards, pocket billiards A63D 15/00)

Definition statement

This group covers:

Any game in which the main purpose is to roll or move small playing bodies, e.g. balls, marbles, discs or blocks, with some skill on a playing surface or rolling board.

Examples: Pinball games, marble games, tabletop football, rolling board games (ex.: US2009084863).

Relationship between large subject matter areas

In some cases the borderline between these games (A63F 7/00) and some sport games (A63B) with balls is blurred. The games of this group do not aim, contrary to the sport games, to do physical activity.

Ball games in which players use a racket or wherein the ball bounces (like in table tennis games) are usually classified with the sport games (A63B).

References relevant to classification in this group

This group does not cover:

Sport games, e.g. table tennis	A63B
Miniature bowling games	A63D 3/00
Bagatelle or similar games	A63D 13/00
Billiards, pocket billiards	A63D 15/00

Informative references

Attention is drawn to the following places, which may be of interest for search:

Board games, raffle games	A63F 3/00
Roulette games	A63F 5/00
Dice games	A63F 9/04

Glossary of terms

In this group, the following terms (or expressions) are used with the meaning indicated:

Bagatelle	a modification of billiards played from one side in which the players' object is to strike the balls so that they, and perhaps other balls, shall fall into numbered holes or pockets that determine the score. Usually the bagatelle table has a rounded far end and a channel (essential) on the right hand side along which the balls are propelled and directed toward the pockets. The bagatelle requires the players standing at the square end of the table hitting the balls with a cue towards the holes at the other end.
Children's bagatelle	consist of marbles or balls that are shot onto a board which features areas fenced in by nails hammered into its surface. Each container scores different points depending upon the likelihood of a ball finishing in it (it is normally smaller than a bagatelle, table size).

A63F 7/0005

{played on a table, the ball or other playing body being rolled or slid from one side of the table in more than one direction or having more than one entering position on this same side, e.g. shuffle boards (miniature bowling-alleys A63D 3/00; goalposts per se A63F 7/305)}

References relevant to classification in this group

This subgroup does not cover:

Miniature bowling-alleys	A63D 3/00

Informative references

Attention is drawn to the following places, which may be of interest for search:

Goalposts per se	A63F 7/305

A63F 2007/0011

{Target bowling or skee ball}

Definition statement

This subgroup covers:

Illustrative example of subject matter classified in this group:

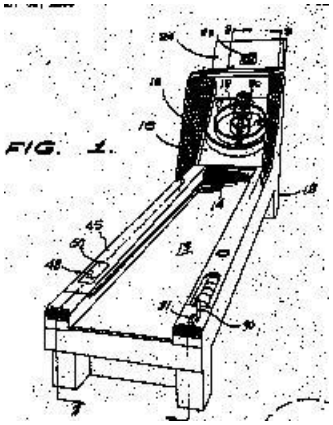

Synonyms and Keywords

In patent documents the following expressions/words " ramp" (EN),"tremplin" (FR) and "Schanze" (DE) are often used as synonyms.

A63F 7/02

using falling playing bodies or playing bodies running on an inclined surface, e.g. pinball games {(bagatelle or similar games A63D 13/00)}

Relationship between large subject matter areas

Distinguish between:

- pinball games (A63F 7/025), where a ball usually propelled by flippers, travels on an inclined board;
- pachinko games (A63F 7/022), with a vertical board; and
- bagatelle (A63D 13/00), which is a modification of billiards played from one side in which the players' object is to strike the balls so that they, and perhaps other balls, shall fall into numbered holes or pockets that determine the score. Usually the bagatelle table has a rounded far end and a channel (essential) on the right hand side along which the balls are propelled and directed toward the pockets. The bagatelle requires the players standing at the square end of the table hitting the balls with a cue towards the holes at the other end.

Children's bagatelle (also included in A63D 13/00) consist of marbles or balls that are shot onto a board which features areas fenced in by nails hammered into its surface. Each container scores different points depending upon the likelihood of a ball finishing in it (it is normally smaller than a bagatelle, table size).

References relevant to classification in this group

This subgroup does not cover:

Bagatelle or similar games	A63D 13/00

A63F 7/022

{Pachinko}

Definition statement

This subgroup covers:

Pachinko or vertical pinball games.

Informative references

Attention is drawn to the following places, which may be of interest for search:

Standard pachinko games (i.e. vertical pinball machines) (FTerm)	2C088/AA01

A63F 7/38

Playing surfaces movable during play {, i.e. games played on a non-stationary surface, e.g. the ball intended to be in permanent motion (balls to be shaken or rolled in small boxes A63F 7/04; eccentric weights put into orbital motion by nutating movement of the user A63B 21/0608)}

Definition statement

This subgroup covers:

Games played on a non-stationary surface, e.g. the ball intended to be in permanent motion, playing surfaces held by the user, mechanisms for rocking rolling boards during play.

References relevant to classification in this group

This subgroup does not cover:

Eccentric weights put into orbital motion by nutating movement of the user	A63B 21/0608
Balls to be shaken or rolled in small boxes	A63F 7/04
Hand-held boxes with balls rolled, e.g. towards holes, by tilting the box	A63F 7/044

A63F 7/40

Balls or other moving playing bodies, e.g. pinballs or discs {used instead of balls}

Definition statement

This subgroup covers:

Balls or other moving playing bodies, e.g. pinballs, sliding discs, for use therefor.

Informative references

Attention is drawn to the following places, which may be of interest for search:

Balls for sport games	A63B 37/00- A63B 45/00, A63B 65/06
Balls for lottery apparatus	A63F 2009/0466
Spherical dices	A63F 2009/0466

A63F 9/00

Games not otherwise provided for (aspects of games using an electronically generated display having two or more dimensions showing representations related to the game A63F 13/00 {; miscellaneous sporting games A63B 67/00})

Definition statement

This group covers:

- Miscellaneous games not otherwise provided for;
- Accessories of general use for games covered in this subclass.

References relevant to classification in this group

This group does not cover:

Miscellaneous sporting games	A63B 67/00
Aspects of games using an electronically generated display having two or more dimensions showing representations related to the game	A63F 13/00
Casino gaming machines	G07F 17/32

Places in relation to which this group is residual:

Card games	A63F 1/00
Board games; Raffle games	A63F 3/00
Roulette games	A63F 5/00
Indoor games using small moving playing bodies	A63F 7/00

A63F 2009/0003

{Games specially adapted for blind or partially sighted people}

Informative references

Attention is drawn to the following places, which may be of interest for search:

Games relative to the sense of touch	A63F 2250/025

A63F 9/001

{Games or toys connected to, or combined with, other objects; Objects with a second use as a toy or game}

Definition statement

This subgroup covers:

Any game when the inventive idea consists in the combination or use of games or toys with another object which is usually not a game or a toy.

Special rules of classification within this group

The game or toy involved should be also classified in the corresponding group if available.

Examples: a beverage container system for playing a card game (US2003116914) is classified in A63F 9/001, Indexing Code A63F 2009/0012 A63F 1/02.

A63F 2009/0023

{with provisions for connecting to clothes}

Informative references

Attention is drawn to the following places, which may be of interest for search:

With provisions for connecting to a part of the body	A63F 2250/49

A63F 2009/0047

{Beer mats or coasters; Placemats}

Informative references

Attention is drawn to the following places, which may be of interest for search:

Beer mats as such	A47G 23/032

A63F 9/0078

{Labyrinth games (A63F 3/00097, A63F 7/04 take precedence)}

References relevant to classification in this group

This subgroup does not cover:

Board games with labyrinth(s)	A63F 3/00097
Indoor games using balls to be shaken or rolled in small boxes, e.g. comprising labyrinths	A63F 7/04
Indoor games using balls to be shaken or rolled in small boxes, comprising 2D-labyrinths	A63F 7/041
Indoor games using balls to be shaken or rolled in small boxes, comprising 3D-labyrinths	A63F 7/042

A63F 2009/0089

{blown by mouth}

References relevant to classification in this group

This subgroup does not cover:

Blowguns	F41B 1/00

A63F 9/0093

{Punchboards}

Definition statement

This subgroup covers:

Boards or cards with holes containing concealed slips, disks or the like, to be punched out, used in various games: the slips or disks can bear numbers, names, prize designations, or the like.

References relevant to classification in this group

This subgroup does not cover:

Devices for checking lottery games with checking-cards with rupturable portions	A63F 3/063

Informative references

Attention is drawn to the following places, which may be of interest for search:

Hammers	A63F 2011/0032
Score counters using pegs insertable into sockets	A63F 2011/0055
Pin and socket connection between game board and playing piece	A63F 2003/00583

Synonyms and Keywords

In patent documents the following expressions/words "cribbage board (EN)" and "planche de cribbage (FR)" are often used as synonyms.

A63F 9/0096

{Reaction time games (testing reaction time A61B 5/162; reaction time training A63B 69/0053; time registering, indicating or recording in connection with sports or games G07C 1/22)}

Informative references

Attention is drawn to the following places, which may be of interest for search:

Testing reaction time	A61B 5/162
Apparatus generating random stimulus signals for reaction-time training involving a substantial physical effort	A63B 69/0053
Time registering, indicating or recording in connection with sports or games	G07C 1/22

A63F 9/0098

{Word or number games (A63F 3/0415, A63F 3/0421, A63F 3/0423 take precedence)}

References relevant to classification in this group

This subgroup does not cover:

Number games as board games	A63F 3/0415

Electric word or number games as board games	A63F 3/0421
Word games as board games, e.g. scrabble(R)	A63F 3/0423

A63F 9/02

Shooting or hurling games (throwing-implements for sports or recreational use A63B 65/00; throwing or projecting toys per se A63H 33/18; {gun simulators F41A 33/00, e.g. light- or radiation-emitting guns F41A 33/02; practice apparatus for gun-aiming F41G 3/26, e.g. using a light-emitting device F41G 3/2616}; targets, target ranges, bullet catchers F41J, {photo-electric hit-detector systems F41J 5/02})

Definition statement

This subgroup covers:

Any skill game involving propelling or causing to fall a projectile through the air at a target.

Relationship between large subject matter areas

In some cases the borderline between these games (A63F 9/02), some sport games (A63B) and some weapon-aiming games (F41) is blurred. The games of this subgroup:

- do not have the purpose of doing a physical activity, contrary to the sport games;
- do not have the purpose of training a weapon, like gun-aiming games.
- In general:
- Games in which players throw a projectile by means of his hands, feet or a racket, and therefore involving a physical activity are usually classified with the sport games (A63B).
- Games in which players throw a projectile by means of a gun or other weapon are generally classified under F41.
- Games with integrated devices, e.g. with a spring -loaded launching device connected to a structure, are generally for A63F 9/02.

References relevant to classification in this group

This subgroup does not cover:

Throwing-implements for sports or recreational use	A63B 65/00
Ring or tossing games, e.g. hooptoss games, aunt sally	A63B 67/06
Throwing or projecting toys per se	A63H 33/18
Gun simulators	F41A 33/00
Light- or radiation-emitting guns	F41A 33/02
Water pistols	F41B 9/00
Practice apparatus for gun-aiming	F41G 3/26
Practice apparatus for gun-aiming using a light-emitting device	F41G 3/2616
Targets, target ranges, bullet catchers	F41J
Photo-electric hit-detector systems	F41J 5/02

Informative references

Attention is drawn to the following places, which may be of interest for search:

Amusement arrangements, e.g. shooting stands	A63G 31/00

Devices allowing competition between several persons, not otherwise provided for	A63G 33/00
Blowguns	F41B 1/00
Darts as munitions	F42B 6/003
Games with water being squirted	A63F 2250/0428

A63F 9/0204

{Targets therefor (for ball games A63B 63/00)}

References relevant to classification in this group

This subgroup does not cover:

Target for ball games, e.g. pétanque	A63B 63/00
Targets, target ranges, bullet catchers	F41J

A63F 9/0252

{Shooting devices therefor}

Informative references

Attention is drawn to the following places, which may be of interest for search:

Blowguns	F41B 1/00
Catapults	F41B 3/02

A63F 9/04

Dice (dice tops A63F 5/04 {D}); Dice-boxes; Mechanical dice-throwing devices {(casino or betting games played on boards A63F 3/00157)}

Definition statement

This subgroup covers:

- Dice (singular: dice or die), i.e. any small throwable object with multiple resting positions, used for generating random numbers or symbols;
- Dice games, i.e. games that use or incorporate a die as their sole or central component, usually as a random device; and
- Accessories for use therewith, e.g. dice-boxes; mechanical dice-throwing devices, rolling boards for dice.
- Dice as such (the object itself) are found in A63F 9/0415 ("Details of dice").

References relevant to classification in this group

This subgroup does not cover:

Casino or betting games played on boards	A63F 3/00157
Dice-tops or teetotums	A63F 5/04, A63F 5/041

Informative references

Attention is drawn to the following places, which may be of interest for search:

Games using balls to be shaken or rolled in small boxes, used for generating random numbers	A63F 7/048
Lottery apparatus	G07C 15/00
Electronically generating random numbers	G07C 15/006

Special rules of classification within this group

Craps games, i.e. dice games involving betting, are placed in group A63F 3/00157 and the Indexing Code A63F 9/04.

A63F 9/0402

{Rolling boards}

Definition statement

This subgroup covers:

Rolling boards for rolling dice thereon.

Informative references

Attention is drawn to the following places, which may be of interest for search:

Rolling boards for movable playing bodies, e.g. balls	A63F 7/36

Special rules of classification within this group

Details of rolling boards for dice can be classified under Indexing Codes A63F 7/36-A63F 2007/3666.

A63F 9/0468

{Electronic dice; electronic dice simulators}

Definition statement

This subgroup covers:

Physical dice in which the random numbers are electronically generated.

References relevant to classification in this group

This subgroup does not cover:

Electronic dies	G07C 15/008

Special rules of classification within this group

Usefull electronic details, e.g. emitters, sensors, classified under the Indexing Codes A63F 9/24.

A63F 2009/0482

{provided with instructions for playing dice games}

Definition statement

This subgroup covers:

Dice games provided with instructions for playing the dice games, i.e. explaining how to proceed depending on the result of throwing the dice. Can take the shape of a instruction book, instruction card, table, etc.

A63F 2009/0491

{Customisable dice, e.g. with interchangeable or replaceable inserts}

Synonyms and Keywords

In patent documents the following expressions/words "customizable dice" (EN) and "dé personnalisable" (FR) are often used as synonyms.

A63F 2009/0622

{Sighting device}

Synonyms and Keywords

In patent documents the following expressions/words "Zieleinrichtung", "Zielgeraet", "Visiereinrichtung" (DE) and "dispositif de visée", "viseur" (FR) are often used as synonyms.

A63F 2009/0638

{Polaroid filters}

Definition statement

This subgroup covers:

Any game using polaroid filters or polarised light.

Synonyms and Keywords

In patent documents the following expressions/words "polarised light", "polarized light" (EN), "polarisiertes Licht" (DE) and "lumière polarisée" (FR) are often used as synonyms.

A63F 9/0641

{using a marker or means for drawing, e.g. pen, pencil, chalk}

References relevant to classification in this group

This subgroup does not cover:

Markers for filling-in lottery tickets	A63F 3/0625

A63F 9/08

Puzzles provided with elements movable in relation, {i.e. movably connected}, to each other

Definition statement

This subgroup covers:

Puzzles provided with elements movable in relation, i.e. movably connected, to each other.

Examples: sliding puzzles, Rubik's cubes.

Relationship between large subject matter areas

When the possible movement of the elements movable in relation occurs on a two-dimensional surface only, then classify in A63F 9/0803.

When the movement occurs three-dimensionally, then classify A63F 9/0826.

Informative references

Attention is drawn to the following places, which may be of interest for search:

2D-jigsaw puzzles	A63F 9/10
3D-jigsaw puzzles	A63F 9/12
Crossword puzzles	A63F 2003/0428

Synonyms and Keywords

In patent documents the following expressions/words " Brain twister", "brain-teaser", "logical puzzle (EN)", "Geduldspiel", "Denkspiel (DE)" and "casse-tête (FR)" are often used as synonyms.

A63F 9/0803

{Two-dimensional puzzles with slideable or rotatable elements or groups of elements, the main configuration remaining unchanged}

Special rules of classification within this group

The 2D sliding puzzles or "slide puzzles" (with sliding elements on a plan, requiring vacant position or gap migration) are in A63F 9/0807.

A63F 9/0807

{requiring vacant positions or gap migration, e.g. two-dimensional sliding puzzles}

Definition statement

This subgroup covers:

Typically, a series of generally rectangular tiles confined closely packed, side by side in coplanar relation as a generally two dimensional or planar array by a housing frame which also provides a vacant tile admitting or parking space so as to permit sequential lateral coplanar movement of selected individual tiles within the frame in and out of the parking space to change the array, typically to reorder indicia forming a sequence of numbers or letters marked on the exposed surface of the tiles or to change a pattern or picture depicted by the tiles.

Example: 2D-sliding (tile) puzzles/shift(able) block puzzles: GB435660:

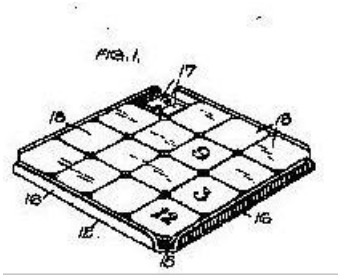

Synonyms and Keywords

In patent documents the following expressions/words " Sliding tile puzzle", "slide puzzle", "sliding puzzle", "sliding block puzzle", "shifting block puzzle (EN)", " Schiebespiel (DE)"and" taquin (FR)" are often used as synonyms.

A63F 2009/0815

{with rotary, stacked elements, e.g. elements with a puzzle image on a curved or cylindrical outer surface}

Definition statement

This subgroup covers:

Illustrative example of subject matter classified in this group (FR2533450):

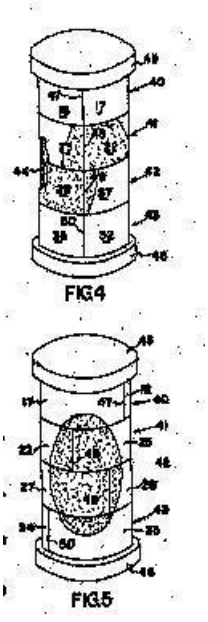

Synonyms and Keywords

In patent documents the following expressions/words "spin puzzle", "spinnable puzzle", "wheel puzzle" (EN) and "puzzle cylindrique" (FR) are often used as synonyms.

A63F 9/0819

{with rotatable non-concentric discs, e.g. gear games}

Definition statement

This subgroup covers:

Illustrative example of subject matter classified in this group (FR2566281):

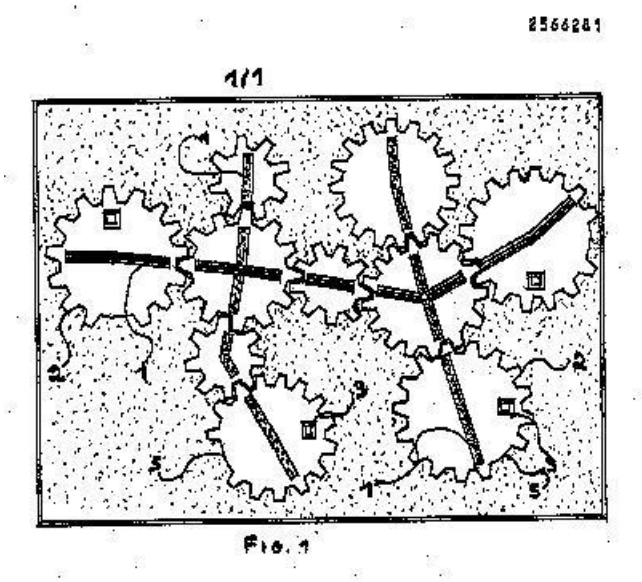

Synonyms and Keywords

In patent documents the following expressions/words " gear game", "game with gears (EN)", and "jeu à engrenages (FR)" are often used as synonyms.

A63F 9/0823

{having overlapping circles with interchangeable elements}

Definition statement

This subgroup covers:

Puzzles in which one or more of the elements are movable along plural intersecting circular paths.

Illustrative examples of subject matter classified in this group (DE9000743U):

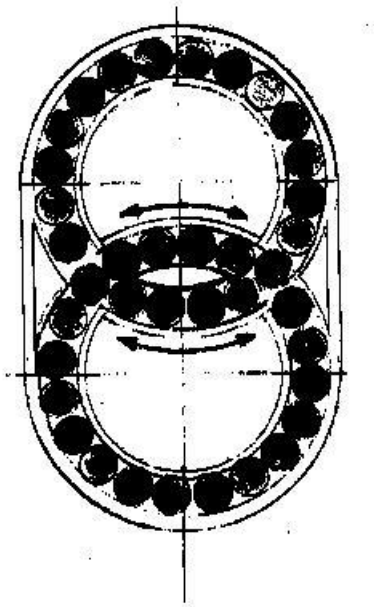

GB2229642:

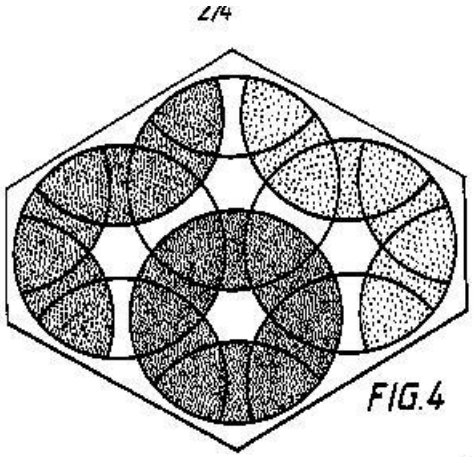

Synonyms and Keywords

In patent documents the following expressions/words "mosaic puzzle" and "shunting puzzle" are often used as synonyms.

A63F 9/083

{with vacant positions or gap migration}

Definition statement

This subgroup covers:

A series of movable elements confined closely packed in a generally three dimensional array by a housing frame which also provides a vacant element admitting or parking space so as to permit sequential movement of selected individual elements within the frame in and out of the parking space to change the array

Illustrative example of subject matter classified in this group, (3D-sliding puzzles WO9604971):

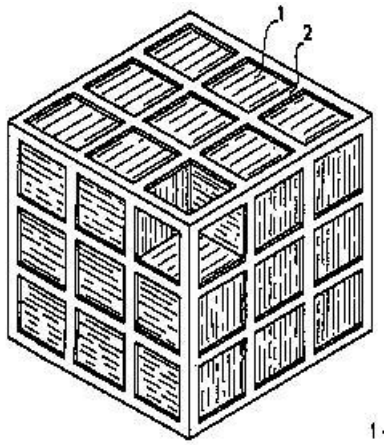

A63F 9/0834

{comprising only two layers, e.g. with eight elements}

Definition statement

This subgroup covers:

Illustrative example of subject matter classified in this group (FR2593075):

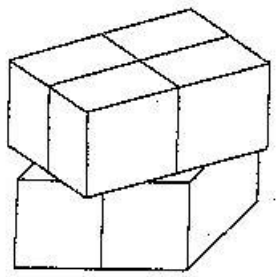

A63F 9/0838

{with an element, e.g. invisible core, staying permanently in a central position having the function of central retaining spider and with groups of elements rotatable about at least three axes intersecting in one point}

Definition statement

This subgroup covers:

Illustrative example of subject matter classified in this group (GB2087245):

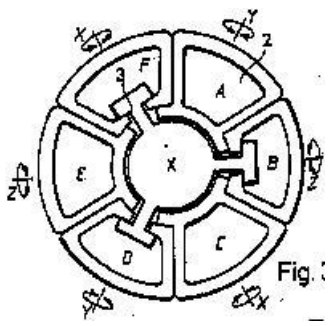

A63F 9/0842

{each group consisting of again a central element and a plurality of additional elements rotatable about three orthogonal axes at both ends, the additional elements being rotatable about at least two axes, e.g. Rubik's cube}

Definition statement

This subgroup covers:

Illustrative example of subject matter classified in this group (Rubik's cube BE887875):

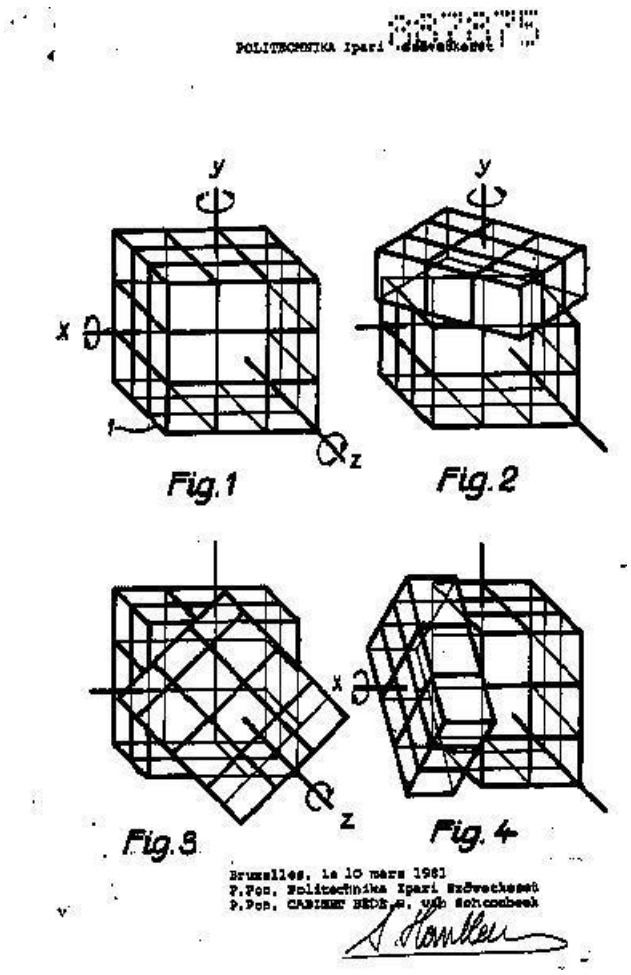

A63F 9/0857

{with elements slidably connected to a visible central body, e.g. beads in grooves}

Definition statement

This subgroup covers:

Illustrative example of subject matter classified in this group (DE29811543U):

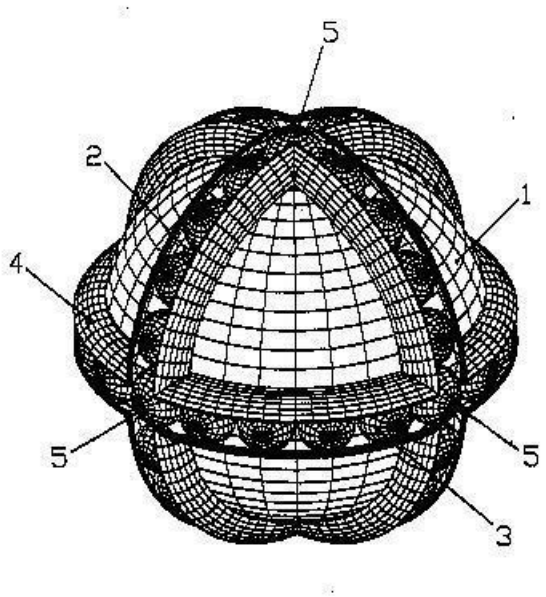

A63F 9/0861

{with elements slidably connected to neighbouring elements, e.g. with hollow interior}

Definition statement

This subgroup covers:

Illustrative example of subject matter classified in this group (EP1584357A1):

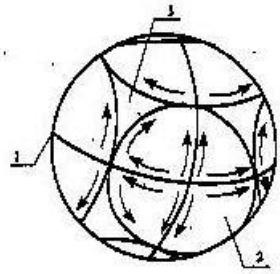

Figure 1

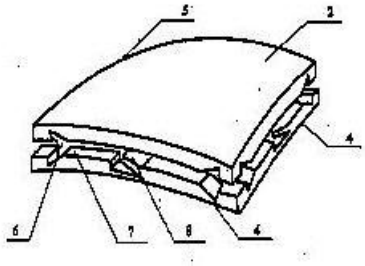

A63F 9/0865

{with a plurality of single elements rotatably connected to a central body which are characterised only by design, e.g. shape, use of colours or symbols}

Definition statement

This subgroup covers:

Illustrative example of subject matter classified in this group (CA2174178):

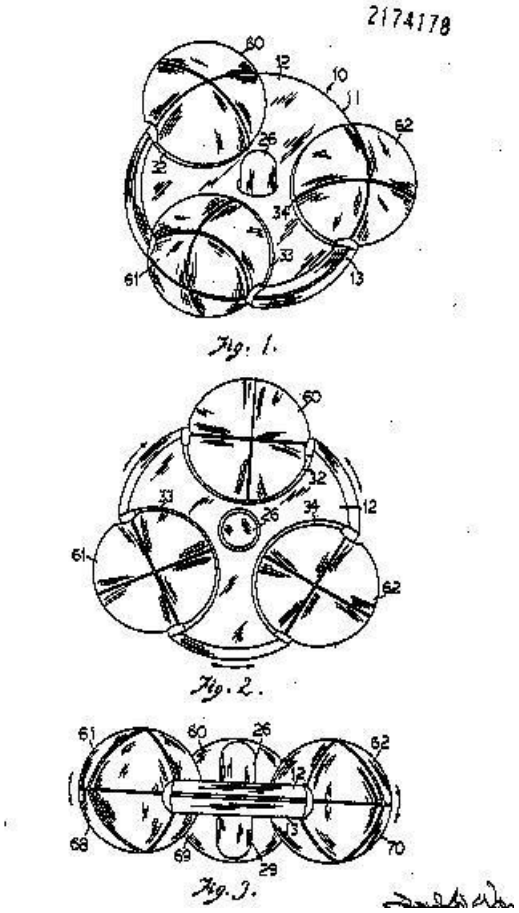

A63F 9/0869

{with groups of elements rotating about at least three axes not intersecting in one point, e.g. toroidal shapes}

Definition statement

This subgroup covers:

Illustrative example of subject matter classified in this group (WO9515799):

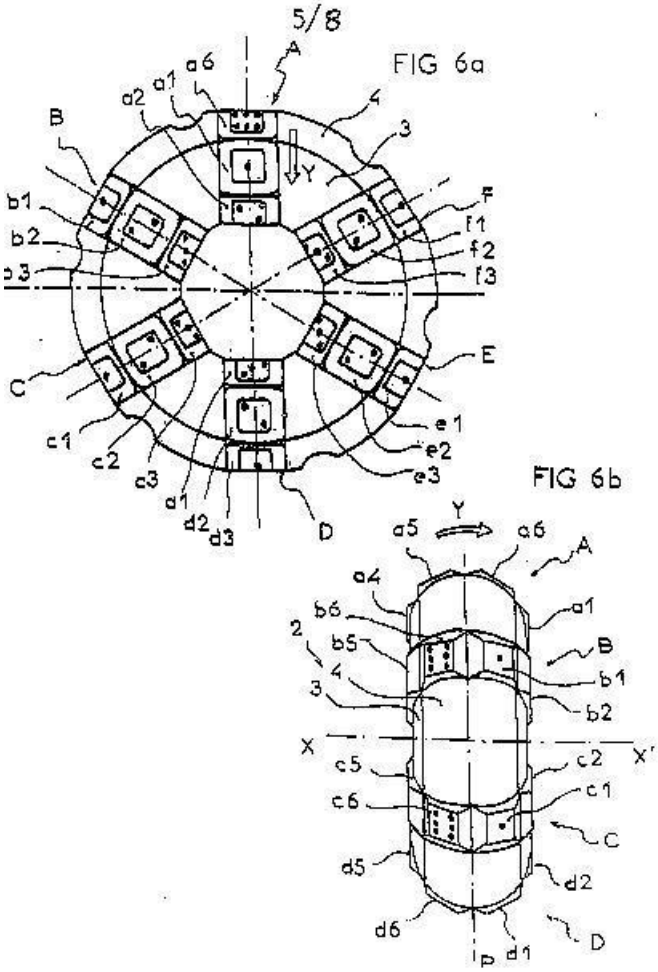

A63F 9/0873

{a sphere rotatable with respect to an inner sphere}

Definition statement

This subgroup covers:

Three-dimensional puzzles comprising a sphere inside another sphere, the spheres being rotatable with respect to each other. The spheres can be incomplete, e.g. with holes.

For example US2002105139

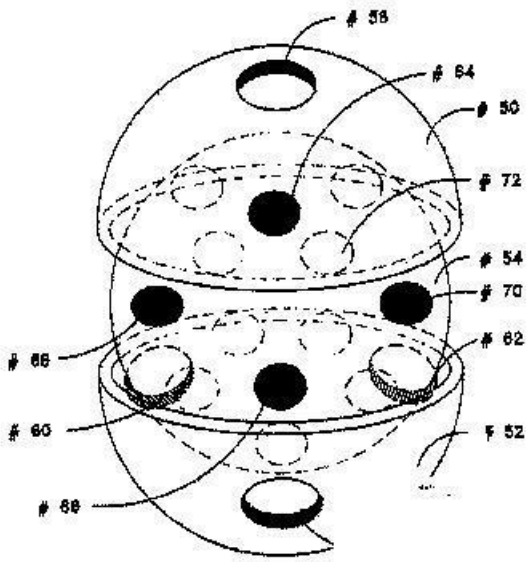

A63F 9/0876

{Bent wire or cord puzzles}

Definition statement

This subgroup covers:
Puzzles with bent wire or cord as primary element.

Example of bent wire puzzle:

U.S. Patent Mar. 10, 1998 Sheet 1 of 2 5,725,214

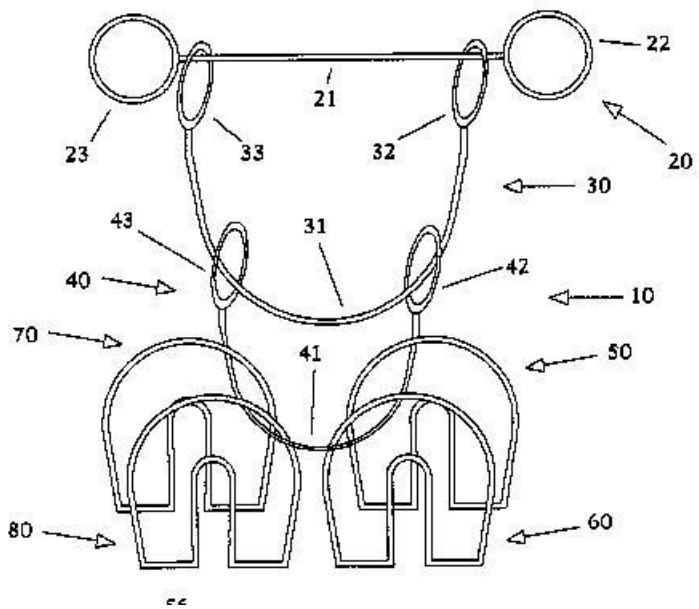

Example of cord puzzle: GB232557

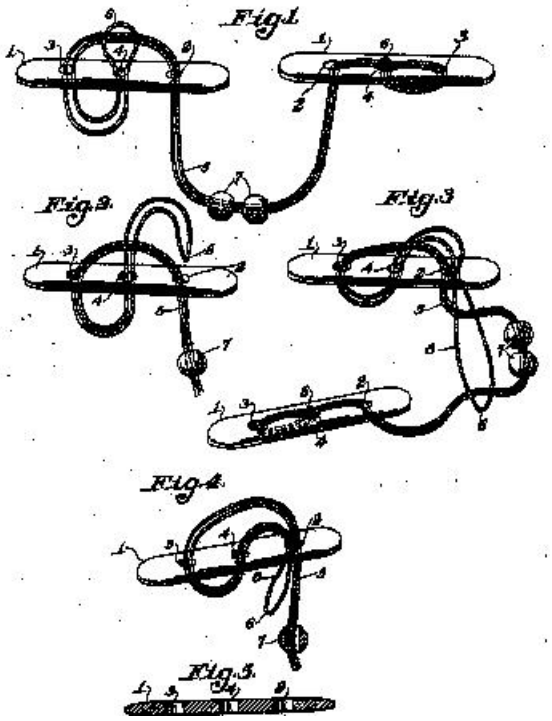

Synonyms and Keywords

In patent documents the following expressions/words "puzzle ring" and "wire puzzle" are often used as synonyms.

A63F 9/088

{Puzzles with elements that are connected by straps, strings or hinges, e.g. Rubik's Magic}

Definition statement

This subgroup covers:

Illustrative example of subject matter classified in this group (EP2138209):

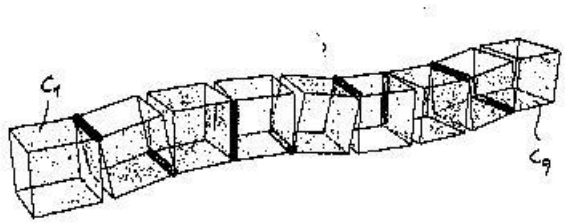

A63F 9/10

Two-dimensional jig-saw puzzles

Definition statement

This subgroup covers:

Puzzles consisting of pieces that are to be fitted together to form a two-dimensional object, e.g. a picture.

References relevant to classification in this group

This subgroup does not cover:

Foldable 2D-pieces for jigsaw puzzles	A63F 2009/1244

Special rules of classification within this group

If the pieces are movably connected to each other, the main configuration remaining unchanged, e.g. sliding puzzles, then: A63F 9/08.

The pieces of puzzles classified under A63F 9/08 are generally permanently connected to each other while playing, whereas the pieces of jigsaw puzzles are generally detached for one another when starting the game.

3D-puzzles, e.g. spherical puzzles, made from non-planar 2D-puzzle elements are classified in A63F 9/12 and A63F 2009/124 when the final configuration is a sphere).

Shapes of jigsaw playing pieces can be classified under the Indexing Codes A63F 9/0669.

A63F 9/1044

{Display boards therefor}

Definition statement

This subgroup covers:

Display boards as underlying support for putting the jigsaw puzzle playing pieces thereon or therein, while playing the jigsaw puzzle game, and/or for displaying the solution.

Also therein: box for 2D jigsaw puzzles.

Special rules of classification within this group

Display on a pedestal or stand: add Indexing Code A63F 2009/0035.

With provisions for hanging on a wall: add Indexing Code A63F 2009/0032.

A63F 2009/105

{with provisions for storing and transporting an interrupted game}

Special rules of classification within this group

When rolling for storing, add also Indexing Code A63F 2003/00258 "rollable, flexible or deformable collapsible playboards for board games" (ex.: WO2008040824).

A63F 2009/1094

{non-planar}

Relationship between large subject matter areas

3D-puzzles, e.g. spherical puzzles, made from non-planar 2D-puzzle elements are classified under A63F 9/12 only, e.g. in A63F 9/12 and A63F 2009/124 when the final configuration is a sphere.

References relevant to classification in this group

This subgroup does not cover:

Foldable pieces for 2D- or 3D-jigsaw puzzles	A63F 2009/1244

A63F 9/12

Three-dimensional jig-saw puzzles

Definition statement

This subgroup covers:

Puzzles consisting of pieces that are to be fitted together to form a three-dimensional object.

References relevant to classification in this group

This subgroup does not cover:

Puzzles with parts generally permanently connected to each other while playing	A63F 9/08
Pieces being movably connected to each other, the main configuration remaining unchanged, e.g. rubik's cube	A63F 9/088
Jigsaw puzzles with generally detached parts for one another when starting the game or3D-puzzles, e.g. spherical puzzles, made from non-planar 2D-puzzle elements	A63F 9/12

A63F 2009/1244

{with foldable pieces, e.g. pieces having folds or hinges}

Definition statement

This subgroup covers:

Jigsaw puzzles with foldable, bendable or hinged pieces.

References relevant to classification in this group

This subgroup does not cover:

Hinged logical puzzles (e.g. chain of elements connected by hinges, puzzles in which each element is articulated to a neighboring element)	A63F 9/088

Informative references

Attention is drawn to the following places, which may be of interest for search:

Building blocks with additional hinge-joints	A63H 33/106

Special rules of classification within this group

3D as well as 2D foldable jigsaw puzzles are given this class.

Add Indexing Code A63F 2003/00233 "collapsible playboard with one fold or hinge" or A63F 2003/00239 "with two hinges or folds" or A63F 2003/00246 "with three or more hinges or folds" when the resulting fold or hinge makes the whole puzzle foldable.

When relevant add Indexing Code A63F 2250/18 "use of resilient or deformable elements" or A63F 2250/183 "foam".

Synonyms and Keywords

Living hinge	thin flexible hinge (flexure bearing) made from plastic (rather than cloth, leather or some other substance) that joins two rigid plastic parts together, allowing them to bend along the line of the hinge

A63F 2009/1256

{using a plurality of pegs}

Definition statement

This subgroup covers:

3D-jigsaw puzzles using a plurality of pegs, pins or rods as puzzle elements (and not as e.g. connectors or binding means between puzzle elements). The pegs can be of same or different types.

A63F 2009/128

{with notches}

Definition statement

This subgroup covers:

Illustrative example of subject matter classified in this group (US2009079131A1):

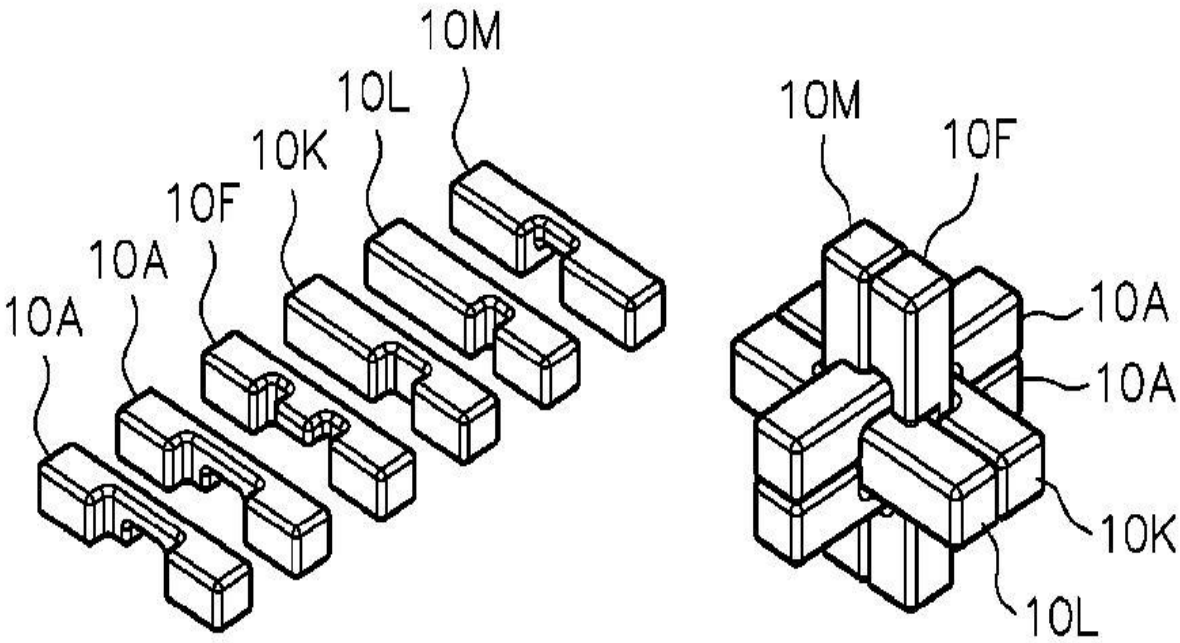

A63F 9/14

Racing games, traffic games, or obstacle games characterised by figures moved by action of the players ({racing} games using dice A63F 3/00)

Definition statement

This subgroup covers:

Illustrative example of subject matter classified in this group (Racing game US5152528):

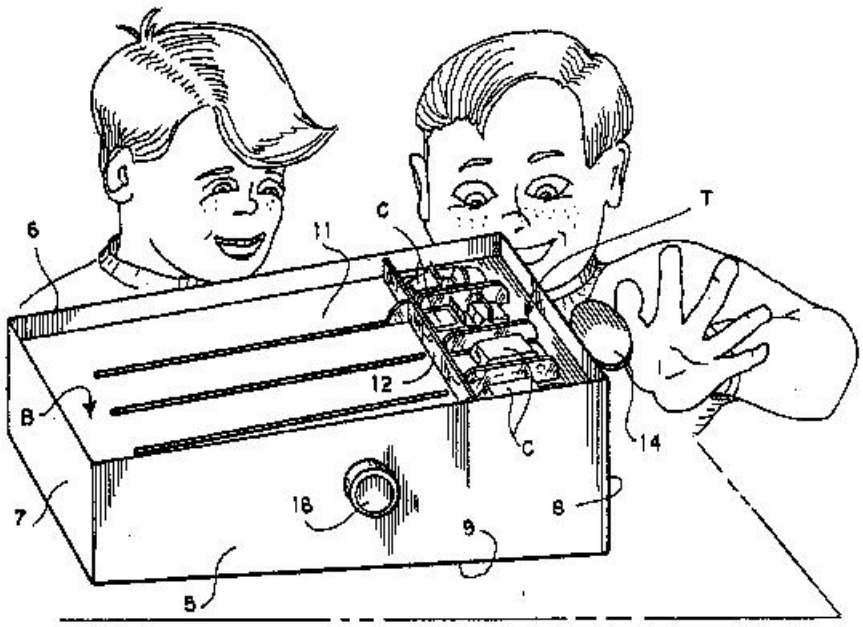

Obstacle game US4208833:

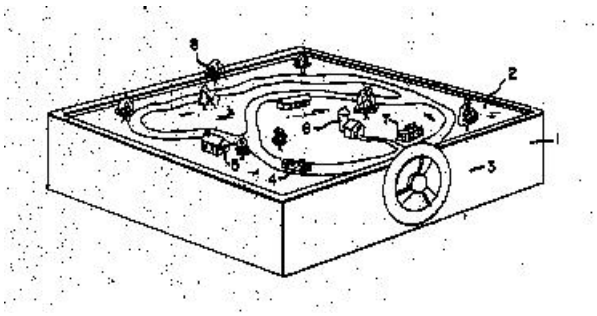

References relevant to classification in this group

This subgroup does not cover:

Board games simulating racing games, traffic games, or obstacle games, usually using dice	A63F 3/00082

Informative references

Attention is drawn to the following places, which may be of interest for search:

Figure toys with single- or multiple-axle undercarriages, by which the figures perform a realistic running motion when the toy is moving over the floor	A63H 11/10

Toy vehicles	A63H 17/00
Track ways for toys	A63H 18/00
Simulators for teaching control of land vehicles, a model being viewed and manoeuvred from a remote point	G09B 9/048

A63F 9/143

{electric}

Definition statement

This subgroup covers:

Racing games, traffic games, and obstacle games characterised by figures moved by action of the player and comprising electric features, e.g. with electromotors for moving the figures.

For example, electric racing game machine WO2008120723:

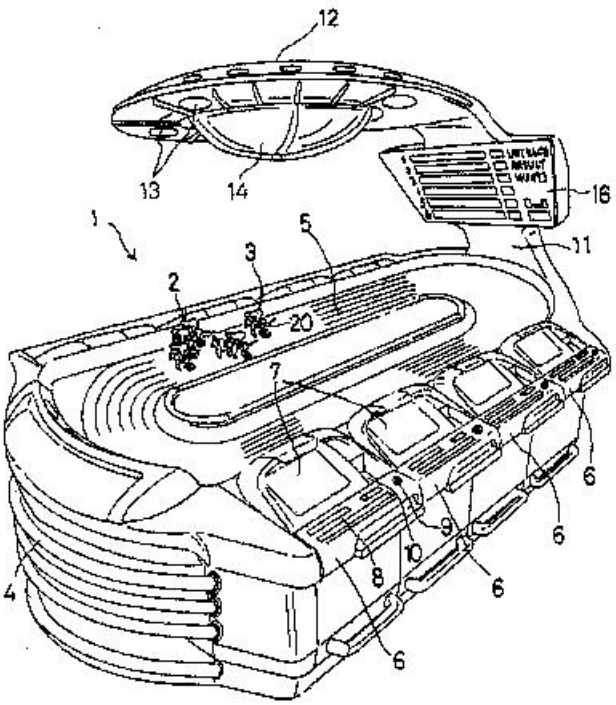

References relevant to classification in this group

This subgroup does not cover:

Racing games simulated on a video display	A63F 13/00
Computerized racing game machines	G07F 17/329

Informative references

Attention is drawn to the following places, which may be of interest for search:

Remote-control arrangements for toy vehicles	A63H 30/00 - A63H 30/04

A63F 9/16

Spinning-top games

Definition statement

This subgroup covers:

Tops involved in a game, games with tops (usually combined with a rolling board or involving a plurality of tops).

References relevant to classification in this group

This subgroup does not cover:

Dice-tops	A63F 5/041
Tops as such	A63H 1/00

A63F 9/18

Question-and-answer games

Informative references

Attention is drawn to the following places, which may be of interest for search:

Electrically-operated teaching apparatus or devices working with questions and answers.	G09B 7/00

A63F 9/183

{electric}

Informative references

Attention is drawn to the following places, which may be of interest for search:

Voting apparatus	G07C 13/00
Electrically-operated teaching apparatus or devices working with questions and answers	G09B 7/00
Watching television being part of the game	A63F 2011/0097
Used for radio or TV, e.g. television shows, used in front of an audience	A63F 2250/64

Special rules of classification within this group

TV quizz shows: add Indexing Code A63F 2250/64.

A63F 9/24

{Electric games;} Games using electronic circuits not otherwise provided for {(video games A63F 13/00, computers for game playing per se G06F 19/00; computerized gaming systems G07F 17/32)}

References relevant to classification in this group

This subgroup does not cover:

Electric board games	A63F 3/00643
Electric indoor games using small moving playing bodies	A63F 7/0058
Electric game simulating a sport game	A63F 7/0664
Electronic dice simulator	A63F 9/0468
Electric question-and-answer games	A63F 9/183
Video games	A63F 13/00
Computerized gaming machines and systems	G07F 17/32
Card games adapted for being played on a screen	A63F 2001/008
Electric features for jigsaw puzzles	A63F 2009/1061

Places in relation to which this group is residual:

Card games	A63F 1/00
Board games; Raffle games	A63F 3/00
Roulette games	A63F 5/00
Indoor games using small moving playing bodies	A63F 7/00
Games not otherwise provided for	A63F 9/00- A63F 9/20

A63F 2009/2469

{of a contour (shadow shows A63J 2019/003)}

References relevant to classification in this group

This subgroup does not cover:

Shadow shows	A63J 2019/003

Synonyms and Keywords

In patent documents the following expression/words "shadow show", "shadow play" (EN), "ombres chinoise", "spectacle d'ombres" (FR) and " Schattenspiel" (DE) are often used as synonyms.

A63F 9/30

Capturing games for grabbing or trapping objects, e.g. fishing games

References relevant to classification in this group

This subgroup does not cover:

Cup and ball	A63B 67/205, A63B 67/10

Informative references

Attention is drawn to the following places, which may be of interest for search:

Crane game machines (ex. US5855374, DE3526438)	G07F 17/3297

Special rules of classification within this group

Crane game machines (ex. US5855374, DE3526438) are classified in both A63F 9/30 and G07F 17/3297 .

A63F 11/00

Game accessories of general use {, e.g. score counters, boxes}

Definition statement

This group covers:

Game accessories of general use, e.g. bags for tokens, spinners, score counters, boxes.

References relevant to classification in this group

This group does not cover:

Tokens	A44C 21/00
Accessories for card games	A63F 1/06- A63F 1/18
Accessories for video games, e.g. joysticks	A63F 13/00
Accessories for lottery tickets	A63F 3/065, A63F 3/068
Accessories of general use for games covered in main group	A63F 9/00
Dice	A63F 9/04
Markers or means for drawing	A63F 9/0641
Accessories for board games	A63F 3/00895
Accessories for indoor games using small moving playing bodies	A63F 7/22

Special rules of classification within this group

Game accessories specially adapted for a particular type of game are classified in one of the groups A63F 1/00 - A63F 9/00 covering the particular game.

Game accessories for specific games, when notable as such: give classification group to the specific game and classification to the accessory.

Game accessories for specific games, when notable only in combination with the specific game: give classification to the specific game and Indexing Code to the accessory.

A63F 11/0011

{Chance selectors (A63F 7/048, A63F 9/04 take precedence)}

Definition statement

This subgroup covers:

Chance selecting devices for games, e.g. spinners.

References relevant to classification in this group

This subgroup does not cover:

Dice-tops	A63F 5/041
Small boxes wherein balls are shaken or rolled for generating random numbers	A63F 7/048
Dice	A63F 9/04
Spinning-top games as random generators	A63F 2009/165

Informative references

Attention is drawn to the following places, which may be of interest for search:

Random number generators	G07C 15/00

A63F 2011/0016

{Spinners}

Definition statement

This subgroup covers:

In a spinner (A63F 11/0011 and subgroups, Indexing Code A63F 2011/0016) a pointer rotates (possibly relatively to a fixed disc) whereas in a fortune wheel (A63F 5/045) a disc rotates relative to a fixed pointer.

Synonyms and Keywords

In patent documents the following expression/words "spinner" and "pointer" are often used as synonyms.

A63F 11/0051

{Indicators of values, e.g. score counters}

Definition statement

This subgroup covers:

Intruments, devices or parts of playing devices for calculating or indicating values, e.g. scores or coefficients.

References relevant to classification in this group

This subgroup does not cover:

Score counters for card games	A63F 1/18

Informative references

Attention is drawn to the following places, which may be of interest for search:

Displays for showing the score of a ball game, indicating arrangements e.g. for sports	G09F 11/00

A63F 2011/0069

{Abacus}

Definition statement

This subgroup covers:

Any abacus as score counters, as calculator or the like function.

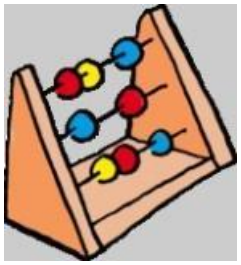

Relationship between large subject matter areas

For the slid bead frames were the game itself consists of sliding a bead over a wire, the key code is the Indexing Code: A63F 2007/4081 "ball with a hole sliding over a guide".

Glossary of terms

In this subgroup, the following terms (or expressions) are used with the meaning indicated:

Abacus	is a particular bead frame with the aim of (score) count ing, calculating.Not to mix up with "abac": the abacs (french "abaques" or "abaques de calcul") are classified in Indexing Code A63F 2011/0067 "score or tally sheet".

Synonyms and Keywords

In patent documents the following expression/words " abacus", "abacuses", "abaci" (EN), "boulier (abaque)" (FR) and "Abakus (DE)" are often used as synonyms.

A63F 13/00

Video games, i.e. games using an electronically generated display having two or more dimensions {(Gaming systems which provide a financial reward G07F 17/32)}

Definition statement

This group covers:

- Structural or hardware-related aspects of video games: accessories, optional for the execution of the game; constructional details of game devices; input devices specially adapted for playing video games; output devices specially adapted for playing video games.
- Details specific to network games: characteristics of the network topology when used in network games; details of servers specially adapted for providing network games.
- Software aspects of video games, played locally or in a network: the mapping of input signals into game commands; the animation of the virtual camera in a video game; indicators added to the game scene; time aspects of video games; simulation of game objects or characters; the generation or alteration of the game content; game management; the provision of additional services to game players.

The following diagram provides some guidance on the structure of the higher-level subgroups:

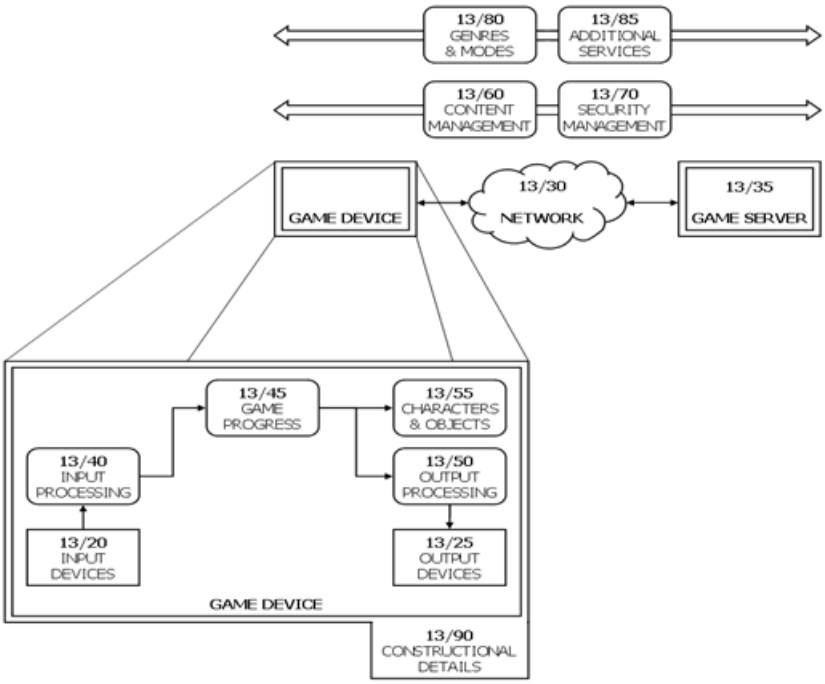

Relationship between large subject matter areas

- This group is an "application place" with respect to more functional places such as G06F, G06T or H04L.
- This group covers systems using computer and telecommunication technologies, which have been specially adapted for providing video games, as seen above.
- The scope of this group differs from that of G07F 17/32 which covers games providing financial rewards, played by electronic means, e.g. online poker, waging or betting.
- The scope of this group also differs from that of main groups A63F 1/00 - A63F 11/00 which cover traditional games such as puzzles and card, board and dice games, and from that of A63F 9/24 which covers traditional games played by electronic means.
- The scope of this group differs from that of A63H, which covers toys.
- This group covers features of input devices specially adapted to video games. The corresponding function place for generic computer input devices is G06F 3/01- G06F 3/03.
- This group is in particular an application place for computer graphics. Animation and 3D graphics in general are covered by G06T 13/00 - G06T 19/00.
- This group is an application place for telecommunication, in particular with respect to network games. Data network services are covered by H04L 29/06.

References relevant to classification in this group

This group does not cover:

Video games having financial rewards	G07F 17/32

Informative references

Attention is drawn to the following places, which may be of interest for search:

Roulette games	A63F 5/00
Indoor games using falling playing bodies or playing bodies running on an inclined surface	A63F 7/02

Coin-freed apparatus and like for games	G07F 17/32

Glossary of terms

In this group, the following terms (or expressions) are used with the meaning indicated:

Arcade machine	coin-operated entertainment device placed in a public venue.
Combo	a sequence of commands which has by design a greater effect when executed within a fixed time period than the mere succession of these commands.
Fiducial (marker)	real object used in the field of view of an imaging system which appears in the image produced, for use as a point of reference or a measure; the object can exist naturally in the scene (features of a face) or be added for the purpose of tracking (light-emitting diode, retro-reflective patch).
Force feedback	outputting forces, vibrations, and/or motions to the player to provide haptic feedback.
Game character	a game entity simulating a sentient being; the simulated being can be real, e.g. a person or an animal, or fictitious, e.g. a dragon or a speaking mirror.
Game client	game device connected to a game server through a network.
Game command	game-specific representation of the control signal, e.g. "pause" or "shoot" command.
Game console	consumer electronics system specially adapted to execute video games, offering reduced functions with respect to generic personal computers; it differs from arcade machines, which are also specially adapted for video games, but for commercial purposes.
Game content game asset	data required for the execution of the game program, e.g. bitmap images, three-dimensional models; the content is usually created by the game makers before the game release, but can also created afterwards by the player, e.g. using level editors.
Game device	a data-processing apparatus enabling performing of the video game; the apparatus is connected to a display and input means, e.g. a controller or a mouse; it is either handheld or stationary; the device can be dedicated to the execution of game programs, e.g. a game console, an arcade game machine, a portable game machine, or a generic computer, e.g. a personal computer.
Game mode	distinct method of operation within the game program, usually relating to distinct game mechanics or goals, e.g. single player mode, multiplayer mode, capture the flag mode
Game model	abstract description of the game's inner workings and the possible interactions with the player, conditioning her tactical possibilities. The game model includes game parameters, such as the score, and the procedures and constraints governing their evolution. The game specification usually includes a model of some physical systems, be they fictitious or real. However, this model is not part of the game model if its sole purpose is to provide a realistic simulation.
Game object	a game entity simulating a thing (excluding sentient beings); the simulated thing can be real, e.g. a tennis ball, or fictitious, e.g. a laser gun.

Game parameter	a variable of the game model. Some variables of the game specification are not game parameters. For instance, the position of the virtual camera in a hand-to-hand fighting game is a game parameter if the position is chosen to be closer to the fighter with the lowest life meter. On the contrary, calculating a natural position of a fighter's elbow using the positions and orientations of his hands and shoulders, does not belong to the game model.
Game program	a computer readable program comprising instructions and data adapted to perform a video game when executed on a data-processing apparatus. To produce the video game program, the game designer communicates the game model in the game specifications to the developer team, who creates or adapts a game engine to implement the game model and optimize its implementation.
Game progress	any change in one of the game parameters (see game model)
Game scene	data describing the main virtual space used in the game's representation, e.g. describing a maze, a race circuit or the room where the player character is located, and its content. By extension, the image resulting from processing this data. The structure used for this data is usually a scene graph.
Game server	a data-processing apparatus or system connected to a network, not adapted for accepting directly player-generated signals, facilitating at least part of the execution of a video game (e.g. receiving inputs from the game clients, executing the game for the game clients and providing processed game information to the game clients for presentation to the player).
Player generated signal	an action made by the player to convey a decision, e.g. move circularly the arm, push a button with a finger.
Virtual camera	virtual viewpoint in world space with position and view direction to render an image of the game.

Synonyms and Keywords

In patent documents the following abbreviations are often used:

3D	three-dimensional
AI	Artificial Intelligence
AR	Augmented Reality
D-pad	Directional pad
FOV	Field Of View
FPS	First Person Shooter (game)
HUD	Head-Up Display
LOD	Level Of Detail
MMORPG	Massively multiplayer online role-playing game
MOG	Multiplayer online game
MUD	Multi-User Dungeon
PC/NPC	Player Character/Non-Player Character
POV	Point Of View

PvP	Player versus Player (mode)
RPG	Role Playing Game
RTS	Real Time Strategy (game)
VR	Virtual Reality

In the technical literature, the following terms (or expressions) are often used:

Directional pad	set of neighbouring switches mounted on a game controller, usually thumb-operated, for indicating one direction, e.g. four-way digital cross
First person / third person mode	in a first person mode, the game is viewed from the point of view of the player character/object; in a third person mode, the game is viewed from above, below or aside of the player character/object
Game engine	core portion of the game program which masks the hardware platform and can be re-used when developing other game programs. The game engine components typically include a rendering engine, a physics engine, and frameworks for e.g. sound, scripting, animation, artificial intelligence, networking, streaming, memory management, threading, localization support, and scene graph management.
Game mechanics	the procedures and constraints expressed in the game model
Gamepad	handheld game controller, where the fingers (especially thumbs) are used to provide input; gamepads generally feature a set of action buttons handled with the right thumb and a direction controller handled with the left; the direction controller has traditionally been a four-way digital cross (see D-pad), but most modern controllers additionally (or as a substitute) feature an analog stick
Gameplay	the interaction process taking place between the player and the game
Joypad	a game controller or a directional pad
Nonlinear game	a game providing challenges that can be completed in a number of different sequences.
Physics engine	component of the game engine which provides an approximate simulation of physical systems in real-time
Pseudo-3D	simulation of a 3D environment using 2D techniques, such as the axonometric projection, parallax scrolling or skyboxing.
Rendering engine	component of the game engine which generates an image from a scene model
Open World, Sandbox	a game mode providing no explicit goal

A63F 13/20

Input arrangements for video game devices

Definition statement

This subgroup covers:

Only input devices, which have been specially adapted for playing games.

Relationship between large subject matter areas

Generic input devices such as a mouse which could also be used in a game are covered in the function place G06F 3/00.

Informative references

Attention is drawn to the following places, which may be of interest for search:

input arrangements or combined input and output arrangements for interaction between user and computer	G06F 3/01
pointing devices displaced or positioned by the user	G06F 3/033

A63F 13/21

characterised by their sensors, purposes or types

Definition statement

This subgroup covers:

The use of commonplace sensors for unforeseen purposes, e.g. a pedal controlling the stand up/ crouch position of a player-character, and devices using unforeseen sensors, e.g. electronic noses.

The subgroups under this group cover the physical parameters to be sensed and the means of detection.

A63F 13/211

using inertial sensors, e.g. accelerometers or gyroscopes

Definition statement

This subgroup covers:

Input devices sensing acceleration, angular acceleration, velocity, angular velocity, position or orientation. A typical setup includes 3 mono-dimensional accelerometers, arranged perpendicularly, where the measured acceleration values are integrated to compute velocity and further, the device's position. The inertial sensor can be included in the game controller. The sensor can simply detect the motion in a given direction, without providing a measure of its intensity, e.g. to detect a push.

Informative references

Attention is drawn to the following places, which may be of interest for search:

acceleration sensors per se	G01P 7/00, G01P 15/00
processing of the acceleration values to recognize a pattern, a gesture or a trajectory	A63F 13/428

A63F 13/212

using sensors worn by the player, e.g. for measuring heart beat or leg activity

Definition statement

This subgroup covers:

Wearable sensors which register a biosignal, such as electroencephalogram, or the motion of the player.

Communication between the input device and the game device is usually wireless, but can be wired.

Informative references

Attention is drawn to the following places, which may be of interest for search:

hand-held video game devices	A63F 13/92

A63F 13/213

comprising photodetecting means, e.g. cameras, photodiodes or infrared cells (A63F 13/219, A63F 13/655 take precedence)

Definition statement

This subgroup covers:

Cameras and image sensors used in video games.

Photo-detecting means, e.g. photodiodes or infrared detectors, included in the game controller.

Typically, a camera is placed close to the main screen and registers the player's motions (see for example ref. 20 of the drawing). To ease tracking, fiducials such as objects with specific colours, shapes or reflectivity can be used. The output information is typically bi-dimensional. Alternatively, photodetecting means are included in the game controller and register the position of infrared light sources. Some imaging systems also provide depth information, using a range sensor, or using several cameras.

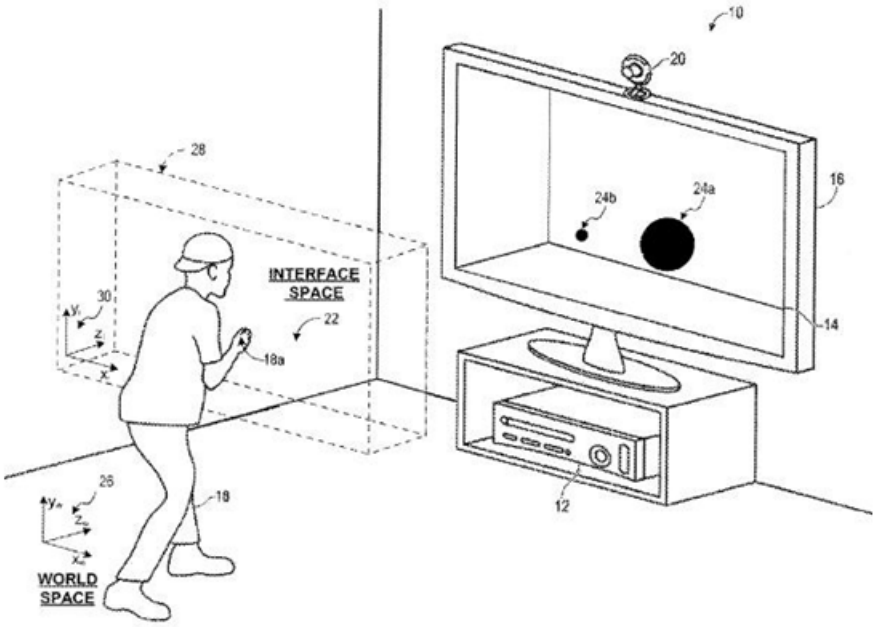

Informative references

Attention is drawn to the following places, which may be of interest for search:

photodetecting means used to detect where the game controller points to on the screen	A63F 13/219
image processing to generate game commands	A63F 13/42

A63F 13/214

for locating contacts on a surface, e.g. floor mats or touch pads

Definition statement

This subgroup covers:

Sensors for detecting a variation of a physical quantity measured at a location on a surface.

Devices using a plurality of discrete switches, e.g. dance mats.

Detecting the location of player's fingers by non-contact methods, e.g. reflected light.

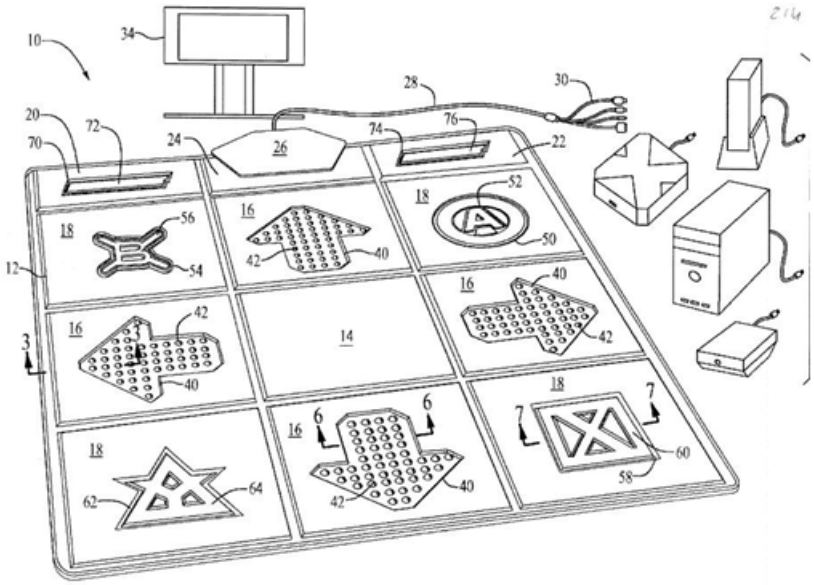

Informative references

Attention is drawn to the following places, which may be of interest for search:

contact sensors	A63F 13/218
game devices locating a contact using a camera	A63F 13/213
processing of position series to recognize a pattern or a trajectory	A63F 13/426

A63F 13/2145

the surface being also a display device, e.g. touch screens

Definition statement

This subgroup covers:

Direct interactions with the game display. Typically, the screen and the sensor are provided in one form-factor. However, the display can be composed of a projector and a projecting surface, also used to detect contact.

Informative references

Attention is drawn to the following places, which may be of interest for search:

input device providing a touch screen as a secondary display	A63F 13/26

A63F 13/215

comprising means for detecting acoustic signals, e.g. using a microphone

Definition statement

This subgroup covers:

Sensors allowing the player to enter a voice command, to sing or to blow. Microphone arrays used for source localization are also classified here.

Informative references

Attention is drawn to the following places, which may be of interest for search:

processing to convert the acoustic signal into game commands	A63F 13/424
beam-formers	H04R 3/00

A63F 13/216

using geographical information, e.g. location of the game device or player using GPS

Definition statement

This subgroup covers:

Use of geographical information obtained directly, e.g. by GPS, or indirectly, e.g. by triangulation of cellular telephone base stations.

Use of geographical information as a game input, or for a "treasure hunt", or as a game parameter, e.g. for matching the day/night cycle of the game to local time.

A63F 13/219

for aiming at specific areas on the display, e.g. light-guns

Definition statement

This subgroup covers:

Use of photo-sensing cells to detect scanning lines on a monitor screen and using synchronization information to calculate the scan line position at the time of detection.

Use of photo-sensing cells to detect IR emitters placed nearby the display.

A63F 13/22

Setup operations, e.g. calibration, key configuration or button assignment

Informative references

Attention is drawn to the following places, which may be of interest for search:

mapping of keys to a specific game's commands	A63F 13/42

A63F 13/23

for interfacing with the game device, e.g. specific interfaces between game controller and console

Definition statement

This subgroup covers:

- Connectors specially adapted for video game input devices.
- Peripherals-to-port assignments.
- Methods to provide additional data on standard connection.
- Devices to allow more controllers than the number of ports on the game device.
- Arrangements to daisy-chain game controllers.

Informative references

Attention is drawn to the following places, which may be of interest for search:

other constructional details or arrangements of video game devices	A63F 13/90
control or interface arrangements for pointing devices	G06F 3/038

A63F 13/235

using a wireless connection, e.g. infrared or piconet

Definition statement

This subgroup covers:

- Wireless controllers
- Specific interface protocols, aspects regarding battery management, use of RFID and other wireless transponders for game data input.

Informative references

Attention is drawn to the following places, which may be of interest for search:

small scale wireless networks; flat hierarchical wireless networks	H04W 84/10
transmission through free space	**H04B10/10**

A63F 13/24

Constructional details thereof, e.g. game controllers with detachable joystick handles

Definition statement

This subgroup covers:

- Construction of input devices having several mechanical degrees of freedom, for example allowing rotation or twisting.
- Details of mechanical contact between elements of game controller, e.g. sliding or rotating contact.

Informative references

Attention is drawn to the following places, which may be of interest for search:

apparatus modifying mechanically an input device	A63F 13/98

A63F 13/245

specially adapted to a particular type of game, e.g. steering wheels

Definition statement

This subgroup covers:

Input devices mimicking real world objects, which are used in the game simulation such as steering wheels, pedals, throttles, guns, rifles, fishing rods, guitars, keyboards, drums.

Informative references

Attention is drawn to the following places, which may be of interest for search:

accessories attached to an input device	A63F 13/98

Special rules of classification within this subclass/group

The type of game should be additionally classified under A63F 13/90.

A63F 13/25

Output arrangements for video game devices

Informative references

Attention is drawn to the following places, which may be of interest for search:

digital output to display devices	G06F 3/14
control of displays in general	G09G

A63F 13/26

having at least one additional display device, e.g. on the game controller or outside a game booth

Definition statement

This subgroup covers:

Game controllers with a small-size display device, allowing to display additional views of the game or player-specific information.

Arcade game devices with additional display devices showing additional views, such as rear- or side-mirror view in a driving game or mounted outside a booth allowing spectators to watch the game.
Multi-screen game systems

A63F 13/28

responding to control signals received from the game device for affecting ambient conditions, e.g. for vibrating players' seats, activating scent dispensers or affecting temperature or light (controlling the output signals based on the game progress A63F 13/50)

References relevant to classification in this group

This subgroup does not cover:

controlling visual or acoustic output signals based on the game progress	A63F 13/50

A63F 13/285

Generating tactile feedback signals via the game input device, e.g. force feedback

Definition statement

This subgroup covers:

- Generating forces to give tactile feedback.
- Generating vibrations.

A63F 13/30

Interconnection arrangements between game servers and game devices; Interconnection arrangements between game devices; Interconnection arrangements between game servers

Informative references

Attention is drawn to the following places, which may be of interest for search:

interconnection arrangements in generic data networks	H04L

A63F 13/31

Communication aspects specific to video games, e.g. between several handheld game devices at close range

Informative references

Attention is drawn to the following places, which may be of interest for search:

communication control characterised by protocols	H04L 29/06

A63F 13/32

using local area network [LAN] connections

Informative references

Attention is drawn to the following places, which may be of interest for search:

LAN in general	H04L 12/28

A63F 13/323

between game devices with different hardware characteristics, e.g. hand-held game devices connectable to game consoles or arcade machines

Definition statement

This subgroup covers:

Communication between handheld game devices and a home game devices.

Communication between portable game devices and arcade machines.

Typically, the game devices are designed by the same company, which simplifies the data exchange. However, this group also covers communications between game devices with different hardware characteristics executing different Operating Systems.

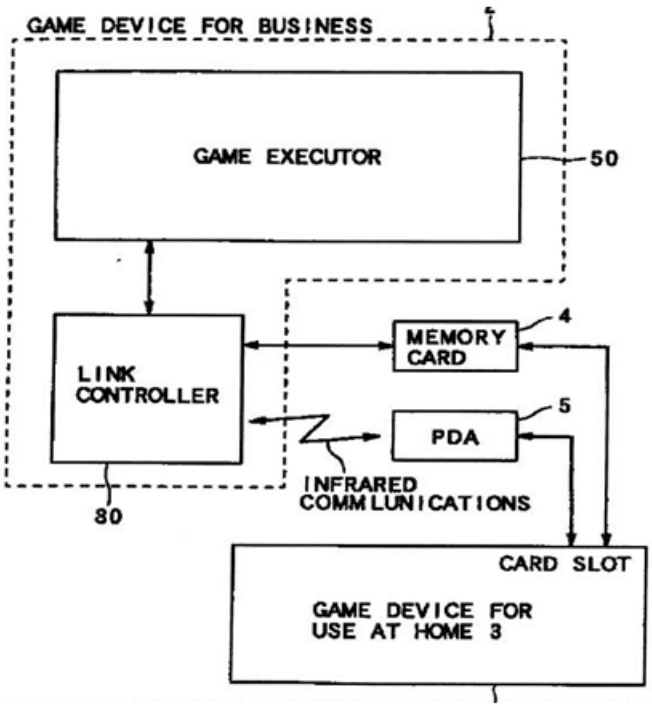

A63F 13/327

using wireless networks, e.g. Wi-Fi or piconet

Definition statement

This subgroup covers:

Arrangements for locally connecting game devices using an air interface.

Connections based on standardized protocols are used such as IEEE 802.11 (WiFi) or Bluetooth.

Connections based on game device specific protocols using for example the Infrared interface of hand-held devices.

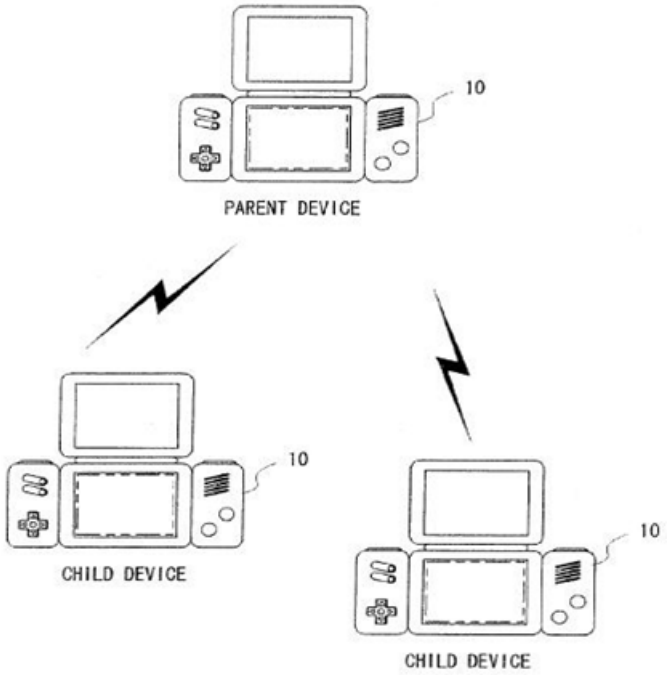

Informative references

Attention is drawn to the following places, which may be of interest for search:

small scale wireless networks; flat hierarchical wireless networks	H04W 84/10
transmission through free space	**H04B10/10**

A63F 13/33

using wide area network [WAN] connections

Informative references

Attention is drawn to the following places, which may be of interest for search:

WAN in general	H04L 12/28

A63F 13/332

using wireless networks, e.g. cellular phone networks

Informative references

Attention is drawn to the following places, which may be of interest for search:

wireless communication networks	H04W

A63F 13/335

using Internet

Informative references

Attention is drawn to the following places, which may be of interest for search:

IP networks per se	H04L 29/06

A63F 13/338

using television networks

Informative references

Attention is drawn to the following places, which may be of interest for search:

interactive television	H04N 21/00

A63F 13/34

using peer-to-peer connections

Informative references

Attention is drawn to the following places, which may be of interest for search:

peer-to-peer networking in general	H04L 29/08

A63F 13/352

involving special game server arrangements, e.g. regional servers connected to a national server or a plurality of servers managing partitions of the game world

Definition statement

This subgroup covers:

Arrangements of hierarchies of game servers and players.

In the exemplary drawing below, references 10, 12, 14, 20, 22, 24 show the different layers in the server hierarchy with increasing geographical coverage.

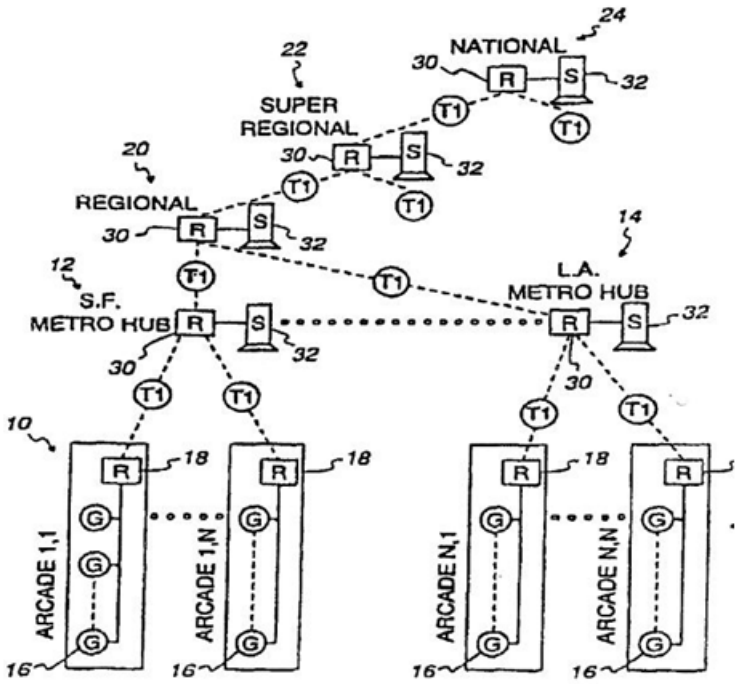

A63F 13/40

Processing input control signals of video game devices, e.g. signals generated by the player or derived from the environment

Definition statement

This subgroup covers:

Aspects of the use of input signals for facilitating the game interaction process.

Relationship between large subject matter areas

Details of the generation of these signals, e.g. transduction from tactile or acoustic input, are classified in the corresponding function places.

References relevant to classification in this group

This subgroup does not cover:

input arrangements for game devices	A63F 13/20

A63F 13/42

by mapping the input signals into game commands, e.g. mapping the displacement of a stylus on a touch screen to the steering angle of a virtual vehicle

Definition statement

This subgroup covers:

The linear mapping of input signals into game commands.

The contextual, dynamic or non-linear mapping of signals received from an input switch or lever to game commands. For example, a fully inclined joystick might trigger a barrel roll instead of a simple turn:

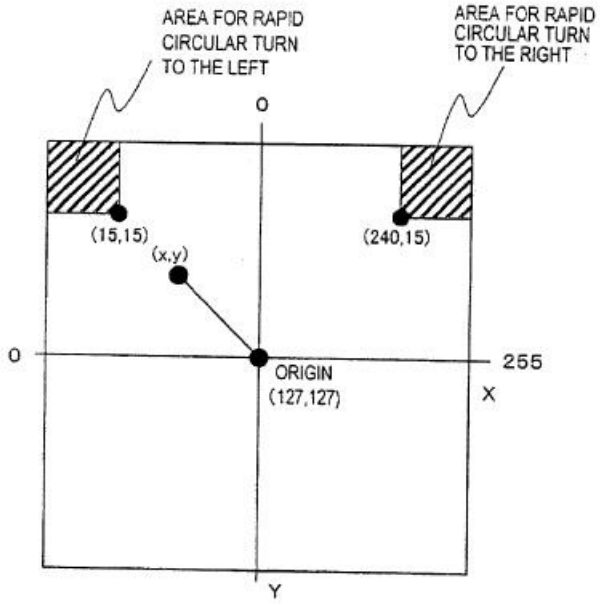

A63F 13/422

automatically for the purpose of assisting the player, e.g. automatic braking in a driving game

Definition statement

This subgroup covers:

The insertion of additional commands in the command sequence, i.e. to produce combos, and correcting the player's input to improve her accuracy.

A63F 13/424

involving acoustic input signals, e.g. by using the results of pitch or rhythm extraction or voice recognition

References relevant to classification in this group

This subgroup does not cover:

input arrangements for game devices comprising means for detecting acoustic signals	A63F 13/215
evaluation based on rhythm only	A63F 13/44

Informative references

Attention is drawn to the following places, which may be of interest for search:

evaluating musical performance in general	G10H 1/00
evaluating musical performance for karaoke	G10H 1/36
evaluating musical performance with respect to rhythm or tempo	G10H 1/40

evaluating musical performance with respect to pitch	G10H 3/12
speech recognition	G10L 15/00
microphones	H04R

A63F 13/426

involving on-screen location information, e.g. screen coordinates of an area at which the player is aiming with a light gun

Definition statement

This subgroup covers:

Non-trivial mappings to game scene (e.g. use of 2D position for pointing to a game object in 3D environment), sequences of operations (e.g. drawing the trajectory of a sword on screen) and their recognition (e.g. symbol drawn to cast spell).

A63F 13/428

involving motion or position input signals, e.g. signals representing the rotation of aninput controller or a player's arm motions sensed by accelerometers or gyroscopes

Definition statement

This subgroup covers:

The processing of signals representing motion of the controller, e.g. swinging, as detected by accelerometers, to produce game commands.

The mapping of signals, e.g. from accelerometers, onto game object parameters.

Detection and recognition of sequences of operation, e.g. rotating a controller such as a lever for 720 degrees.

Noise resistant procedures.

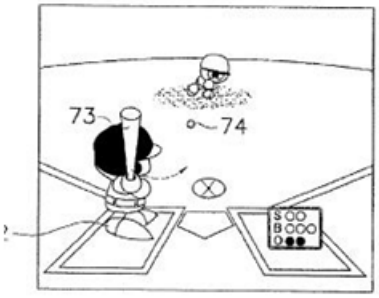

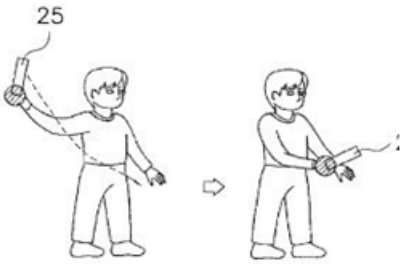

References relevant to classification in this group

This subgroup does not cover:

input arrangements for game devices using inertial sensors	A63F 13/211

A63F 13/44

involving timing of operations, e.g. performing an action within a time slot

Definition statement

This subgroup covers:

Evaluation of timing actions, e.g. in rhythm games, time-dependent sequences of commands, e.g. combos, and the displays associated to timing.

In the exemplary drawing below, each time slot T1, T2, T3, T4 has subdivisions defining the optimal timing of an action.

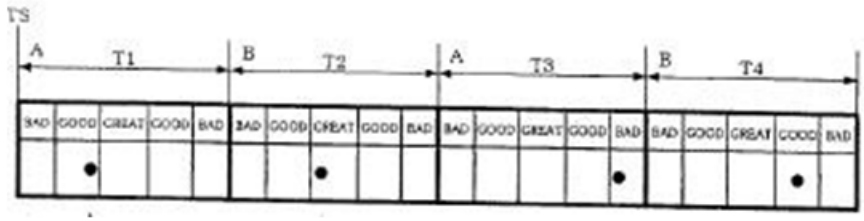

A63F 13/46

Computing the game score

Definition statement

This subgroup covers:

Details of scoring methods, such as fuzzy evaluations of score, management of experience points or rewards scheme.

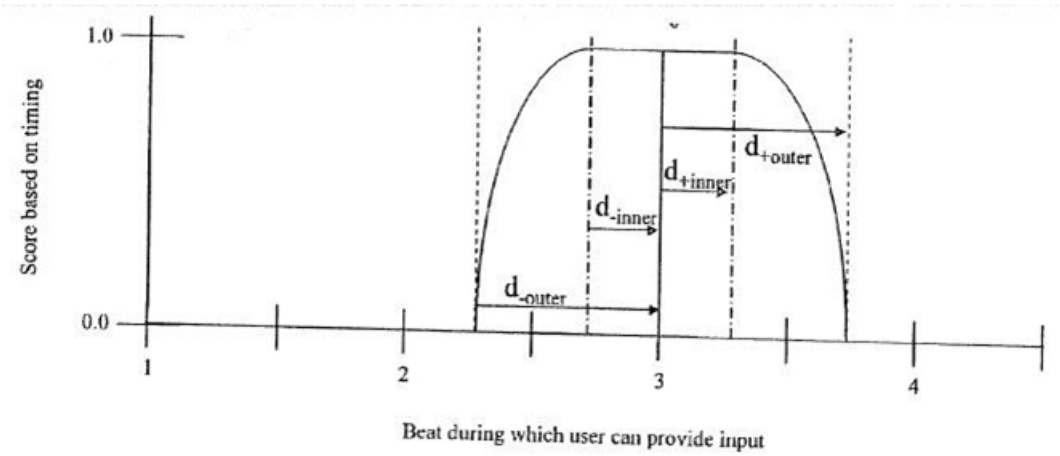

Informative references

Attention is drawn to the following places, which may be of interest for search:

comparisons of scores and rankings	A63F 13/798

A63F 13/47

involving branching, e.g. choosing one of several possible scenarios at a given point in time

Definition statement

This subgroup covers:

The control of the game's narrative. A narrative structure can be implemented trivially as a sequence, but also as a tree or as a set of goals or tasks randomly assigned to NPC, to provide nonlinear gameplay.

The exemplary drawing below shows different branching points in the narrative (410,420,430) with the possible alternative segments.

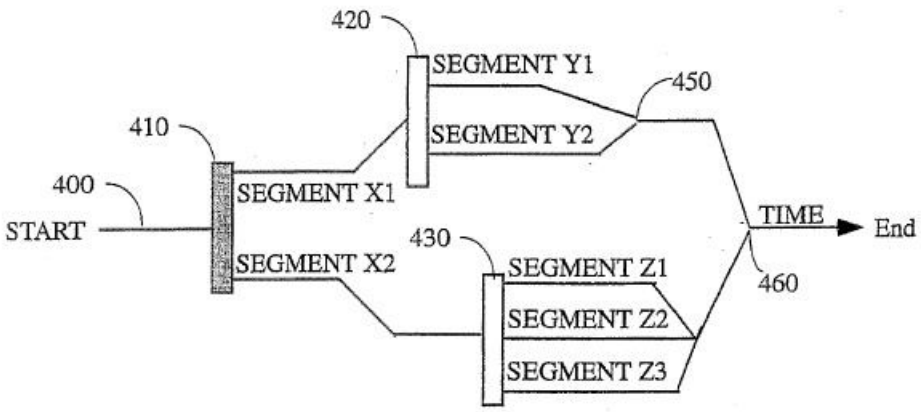

A63F 13/49

Saving the game status; Pausing or ending the game

Definition statement

This subgroup covers:

The storage of game data in internal or external memory. Both "save" and "pause" commands can be triggered by the player or automatically, e.g. pausing when receiving a phone call on the same device or auto-save feature.

Typically, a multiplayer game played over a network requires a protocol to pause or end the game. For instance, a player closes her own handheld apparatus. Prior to setting of a sleep mode, the game apparatus notifies all other game apparatuses of the interruption of the communication game, and then the game apparatus saves parameters necessary to execute a game main processing program to interrupt the execution of the game main processing program.

A63F 13/493

Resuming a game, e.g. after pausing, malfunction or power failure

Definition statement

This subgroup covers:

Methods for retrieving game status and value of the game parameters as they were when the game was suspended

Methods for compensating discontinuities in memory or input when resuming. For instance, if a game using a controller with a tilt sensor is paused, then the change of position during pause will cause a discontinuity in the input coordinates.

A63F 13/497

Partially or entirely replaying previous game actions

Definition statement

This subgroup covers:

Backward replay allowing the player to roll back to a previous state, e.g. before her character's death.

Forward replay allowing to display past game events.

Summary or recap techniques for shortening the replay.

A63F 13/50

Controlling the output signals based on the game progress

Definition statement

This subgroup covers:
Aspects of the use of such signals for facilitating the game interaction process.

Use of signals not directed to the screen or the speakers.

A63F 13/52

involving aspects of the displayed game scene

Informative references

Attention is drawn to the following places, which may be of interest for search:

two dimensional image generation	G06T 11/00
animation in general	G06T 13/00
three dimensional image rendering	G06T 15/00

A63F 13/525

Changing parameters of virtual cameras

Definition statement

This subgroup covers:
The control of virtual cameras to facilitate the interactions between the player and the game.

The use of game variables for this control. For instance, in a fighting game, the camera can be placed closer to the fighter with the lowest life meter.

Informative references

Attention is drawn to the following places, which may be of interest for search:

Navigation in three-dimensional environments	G06T 19/00

A63F 13/5252

using two or more virtual cameras concurrently or sequentially, e.g. automatically switching between fixed virtual cameras when a character changes room or displaying a rear-mirror view in a car-driving game

Definition statement

This subgroup covers:
Techniques that enable rendering of scenes from multiple perspectives.

In the exemplary drawing below, virtual cameras 401, 402 are placed on both sides of the wall, allowing rendering the scene from 2 perspectives (figure (b), (c))

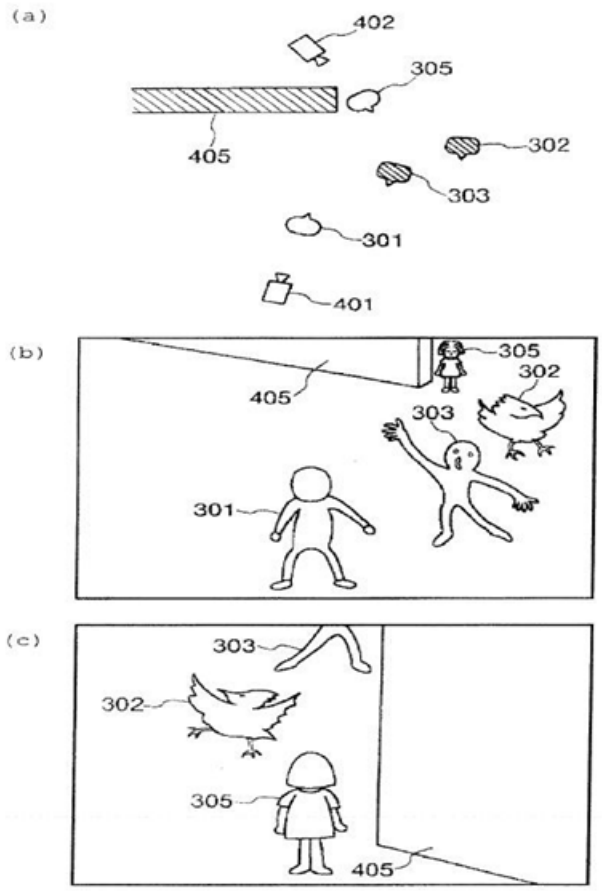

A63F 13/5255

according to dedicated instructions from a player, e.g. using a secondary joystick to rotate the camera around a player's character

Definition statement

This subgroup covers:

Direct control of the camera by the player to e.g. resolve projection ambiguities or occlusions. This control can be explicit, e.g. using a dedicated lever, or implicit. For instance, the orientation of the virtual camera can be set to the real orientation of a camera, to produce an augmented reality game. Alternatively, the head of the player can be tracked and the virtual viewpoint's position be updated accordingly, to produce an autostereoscopic display.

In the exemplary drawing below, the player can select view 160A or 160B using the input device 120.

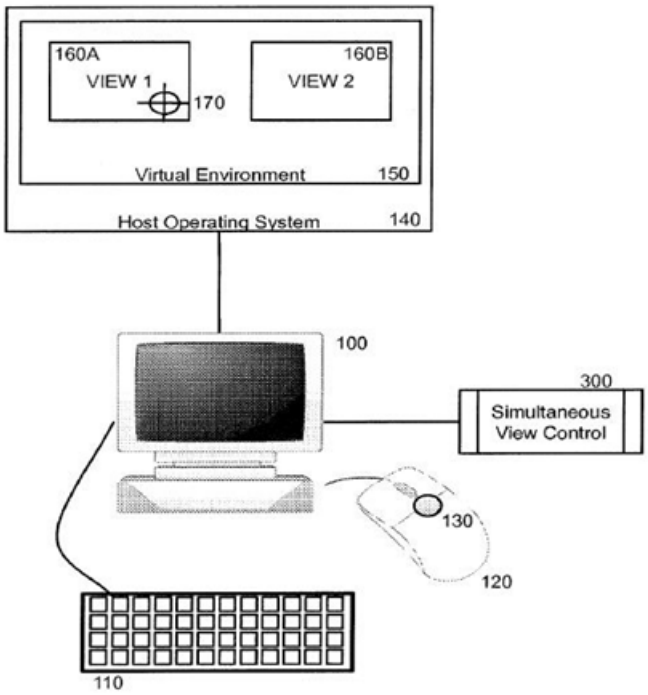

A63F 13/5258

by dynamically adapting the position of the virtual camera to keep a game object or game character in its viewing frustum, e.g. for tracking a character or a ball

Definition statement

This subgroup covers:

Methods for setting dynamical parameters of the virtual camera according to the dynamical parameters of a game object or character, allowing to implement cinematographic camera effects in video games.

Typically, speeds will be similar but the virtual camera may accelerate or decelerate according to a predefined game event. The relative height or angle of the virtual camera provides also the desired view of the game scene.

For example, if the player's car approaches an obstacle such as a tree or building, the viewpoint is positioned to quickly approach the player's car by increasing the moving speed.

In the further exemplary drawing below, virtual camera C tracks the virtual skier and changes its height and direction between C1 and C2 according to the game course.

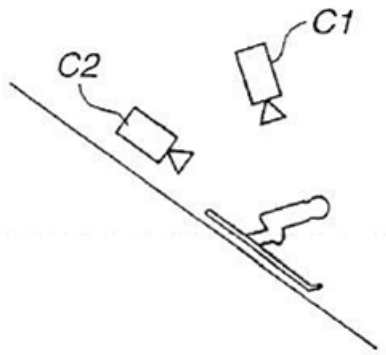

A63F 13/53

involving additional visual information provided to the game scene, e.g. by overlay to simulate a head-up display [HUD] or displaying a laser sight in a shooting game

Definition statement

This subgroup covers:

The display of game state variables which are not expressed in the game scene or of information to improve the game-player interaction. For instance, a magnified view of the target is displayed in a shooting game or a gauge for controlling the timing of the pitch in a baseball game.

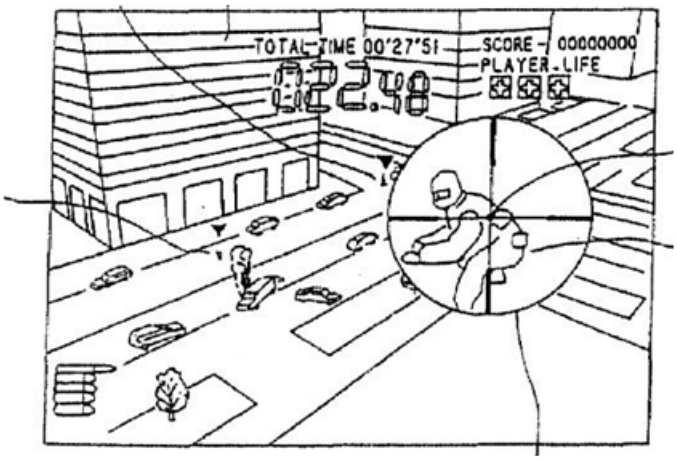

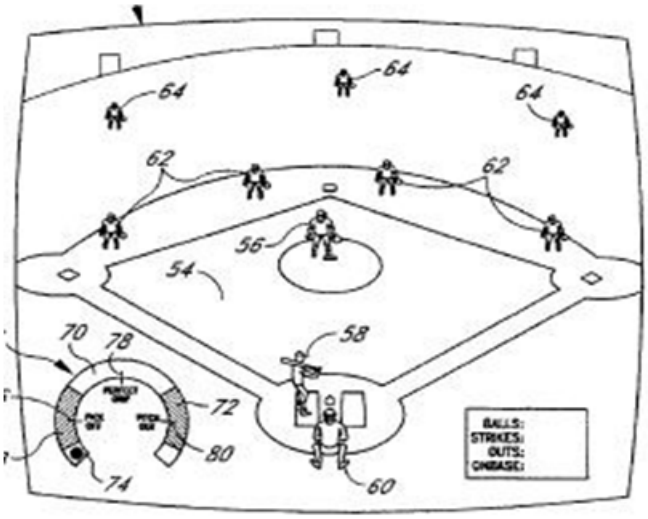

A63F 13/533

for prompting the player, e.g. by displaying a game menu

Definition statement

This subgroup covers:

Methods for prompting the player by presenting a display of control buttons, a keyboard, a menu, or the like.

Informative references

Attention is drawn to the following places, which may be of interest for search:

interactions techniques for graphical user interfaces	G06F 3/048

A63F 13/537

using indicators, e.g. showing the condition of a game character on screen

Definition statement

This subgroup covers:

Indicators related to the experience or health of characters, for example, power gauges and life indicators.

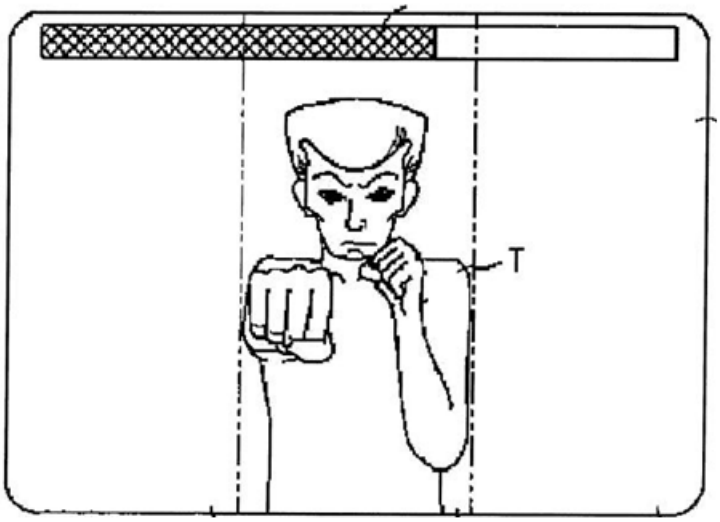

A63F 13/5372

for tagging characters, objects or locations in the game scene, e.g. displaying a circle under the character controlled by the player

Definition statement

This subgroup covers:

Indicators used to show the current selection or the target for the next game command. The selection can be controlled by the player, or automatic, e.g. highlighting the closest team member in a soccer game.

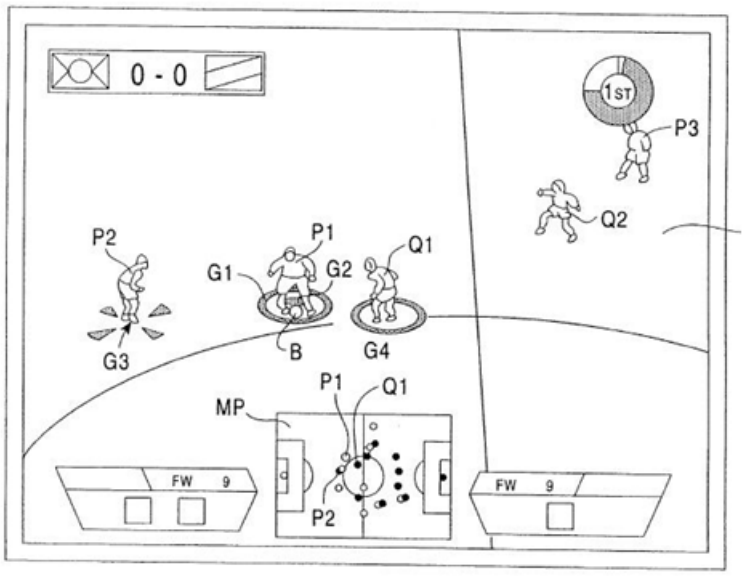

A63F 13/5375

for graphically or textually suggesting an action, e.g. by displaying an arrow indicating a turn in a driving game

Definition statement

This subgroup covers:

Techniques to help the player choosing her next command. Typically, a textual advice or a drawing of the game controller is overlaid. It is also used to provide information on a part of the game scene which is not visible on the screen, e.g. the position of the soccer team members on the field.

Hints as part of an in-game tutorial.

Indicators linked to an object in the scene.

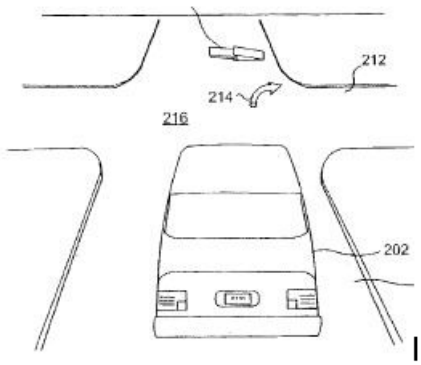

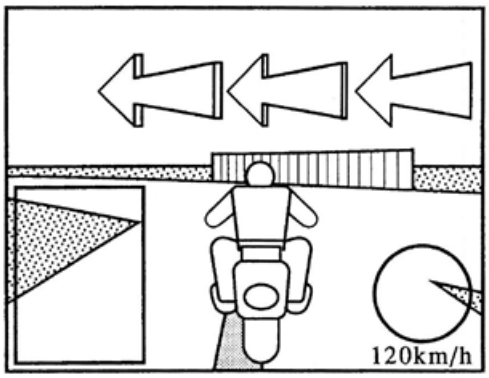

Informative references

Attention is drawn to the following places, which may be of interest for search:

indicator expressing the timing of operation	A63F 13/44

A63F 13/5378

for displaying an additional top view, e.g. radar screens or maps (using two or more virtual cameras concurrently A63F 13/5252)

Definition statement

This subgroup covers:

Overlaid windows with a two-dimensional map of the game scene.

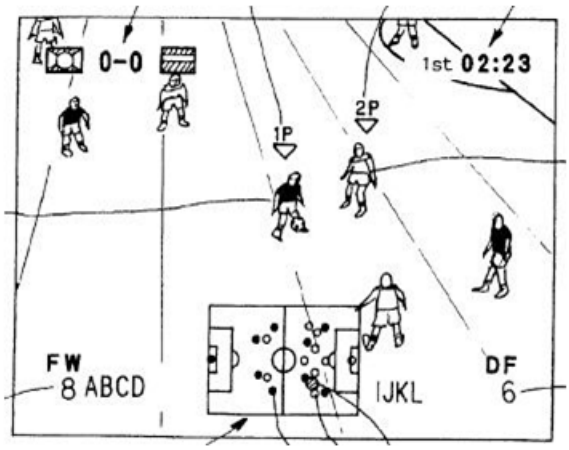

References relevant to classification in this group

This subgroup does not cover:

Using two or more virtual cameras concurrently	A63F 13/5252

A63F 13/54

involving acoustic signals, e.g. for simulating revolutions per minute [RPM] dependent engine sounds in a driving game or reverberation against a virtual wall

Definition statement

This subgroup covers:

Sound effects in video games.

In the first example below, sound characteristics are generated depending on the status of the car (idling, moving). In the second example, the reverberation from obstacles 901, 902 is be simulated.

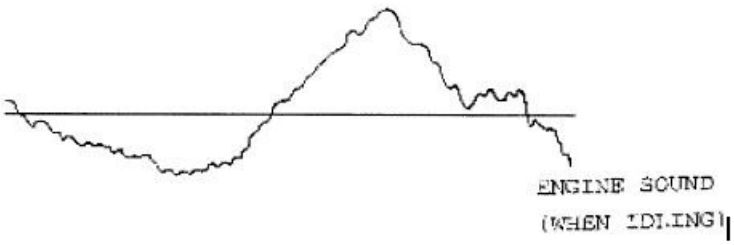

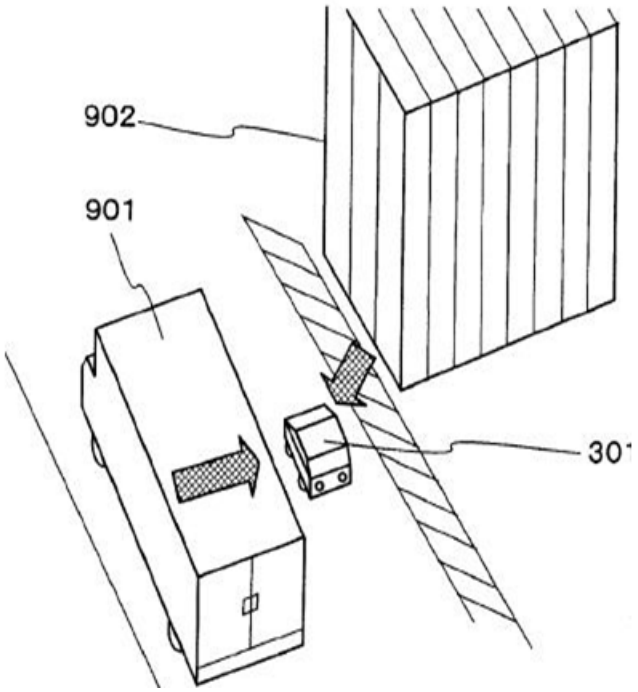

Informative references

Attention is drawn to the following places, which may be of interest for search:

sound-producing devices	G10H, G10K, H04R

A63F 13/55

Controlling game characters or game objects based on the game progress

Informative references

Attention is drawn to the following places, which may be of interest for search:

animation in general	G06T 13/00
3d image rendering	G06T 15/00

A63F 13/56

Computing the motion of game characters with respect to other game characters, game objects or elements of the game scene, e.g. for simulating the behaviour of a group of virtual soldiers or for path finding

Definition statement

This subgroup covers:

Methods for moving automatically non-player characters in the game scene according to the game progress. For example, virtual soldiers follow their leaders in a strategy games or virtual soccer characters are positioned to receive or intercept the ball.

In the first example below, characters 51 and 52 are moving automatically to a location according to player input on a touch screen. In the other example, non-player characters 11 and 12 are approaching automatically the player character.

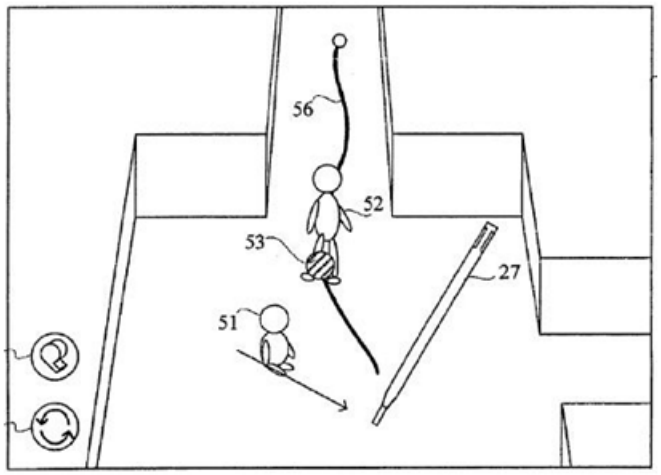

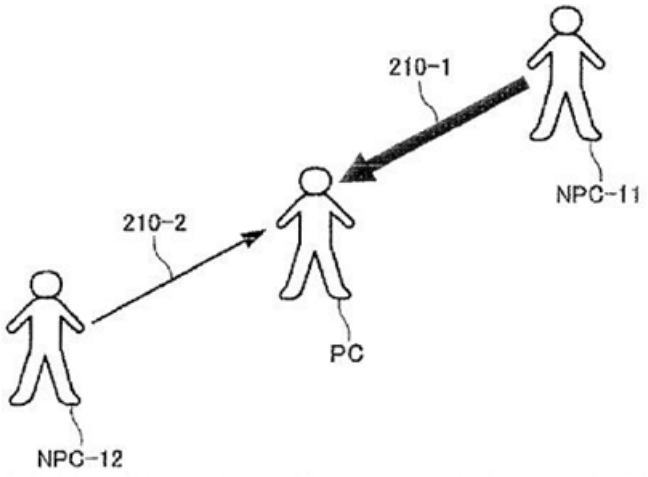

A63F 13/57

Simulating properties, behaviour or motion of objects in the game world, e.g. computing tyre load in a car race game (A63F 13/56 takes precedence)

Definition statement

This subgroup covers:

Techniques for simulating the law of physics applied to game objects

In the example below, tyre load (front, rear, left or right) is computed according to the longitudinal or transversal acceleration of the virtual racing car and indicated by the shading.

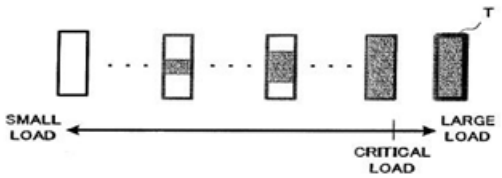

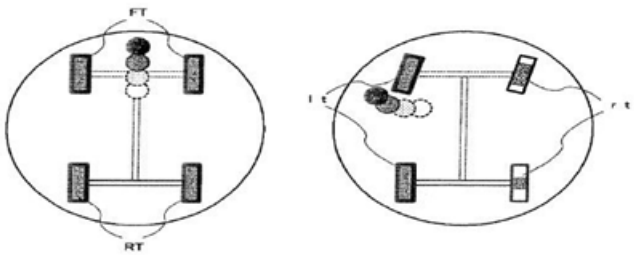

A63F 13/573

using trajectories of game objects, e.g. of a golf ball according to the point of impact

Definition statement

This subgroup covers:

The impact of calculated trajectories on the game process.

In the examples below, the trajectories of the tennis or soccer ball are used to determine the landing point on the game field.

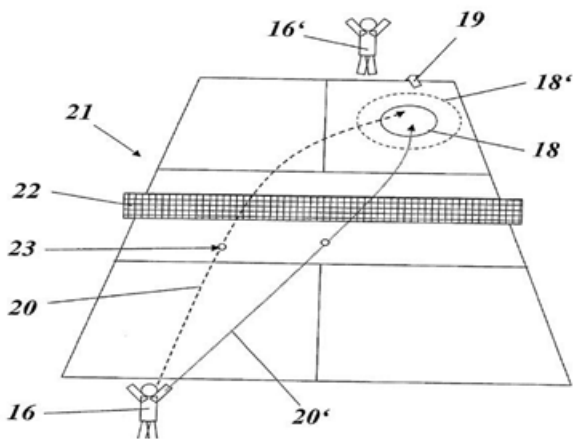

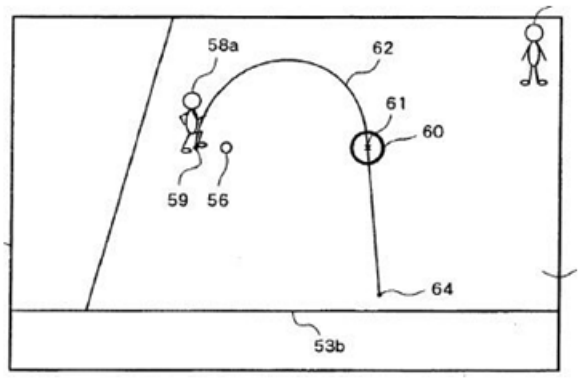

A63F 13/577

using determination of contact between game characters or objects, e.g. to avoid collision between virtual racing cars

Definition statement

This subgroup covers:

The determination if an object or character has entered the collision zone of other objects or characters.

The triggering of a corresponding game action if collision has occurred.

In the examples below, the results of collision determination are used to find out if the player character has broken a glass surface with a ball, has been hit by an arrow or could catch a flying object.

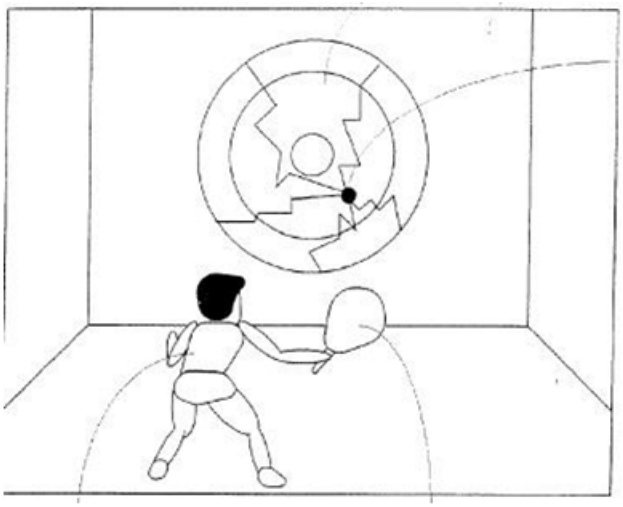

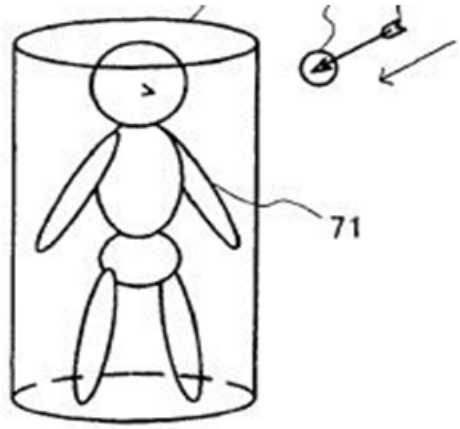

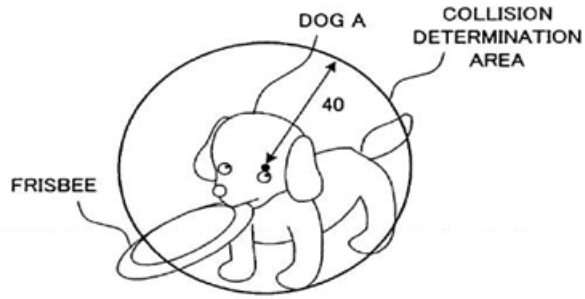

Informative references

Attention is drawn to the following places, which may be of interest for search:

collision detection in image processing	G06T 19/00

A63F 13/58

by computing conditions of game characters, e.g. stamina, strength, motivation or energy level

Definition statement

This subgroup covers:

The computation of parameters associated with game characters, which need to be continuously updated in the game course.

The use of those parameters to influence the game course as they typically have a significant impact on the outcome of the game.

The dashboard of the exemplary drawing below shows the different skill parameters of a game character in a soccer video game.

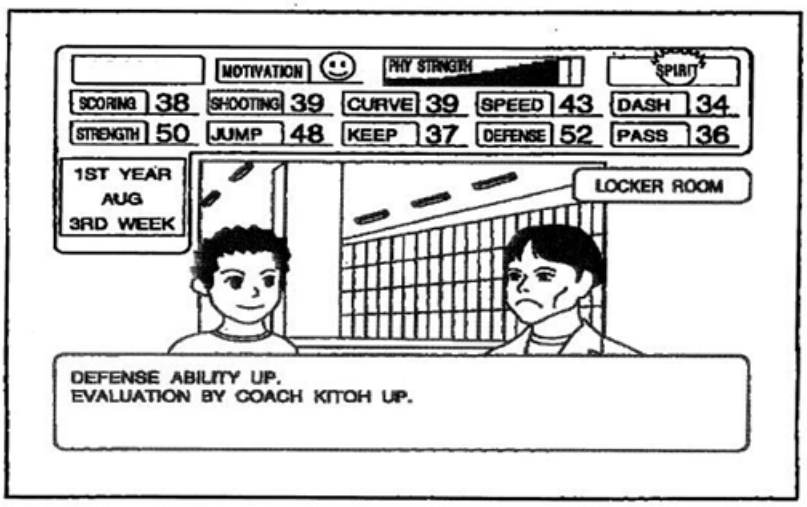

A63F 13/61

using advertising information

Definition statement

This subgroup covers:

Techniques for embedding advertising information in video games.

Techniques for associating advertising information to video games.

In the example below, a virtual billboard displays an advertisement in a video racing game.

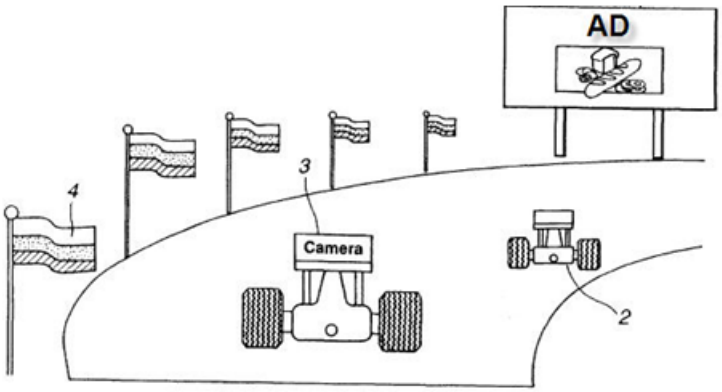

Informative references

Attention is drawn to the following places, which may be of interest for search:

advertising per se	G09F
marketing, e.g. advertising	G06Q 30/02

A63F 13/63

by the player, e.g. authoring using a level editor

Definition statement

This subgroup covers:

Means allowing the player to create new game items, or to add music or a personalised sound track to the game.

A63F 13/65

automatically by game devices or servers from real world data, e.g. measurement in live racing competition

Definition statement

This subgroup covers:

Collecting images and data from real world games, races, etc., and the processing and use of this information to create a virtual event, for example a race between a player's virtual car and real cars.

A63F 13/655

by importing photos, e.g. of the player

Definition statement

This subgroup covers:

Techniques for embedding photos in video games.

Techniques for associating photos to video games.

In the example below, photos of other players are used to tag enemy characters 22 and 24.

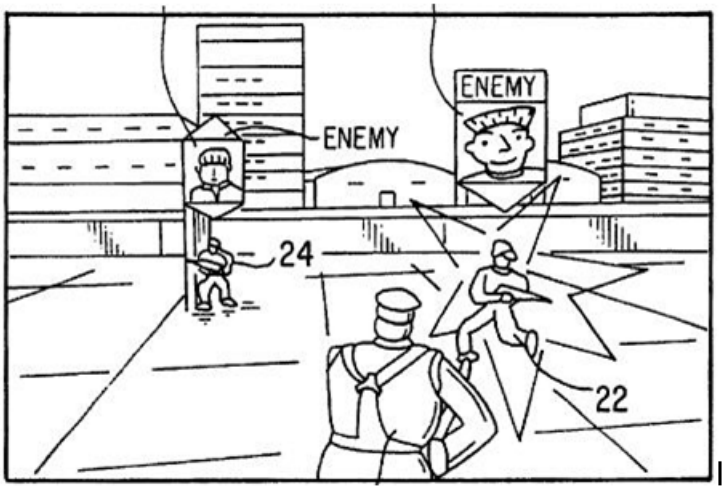

References relevant to classification in this subgroup

This subgroup does not cover:

input arrangements for game device comprising photodetecting means	A63F 13/213

A63F 13/67

adaptively or by learning from player actions, e.g. skill level adjustment or by storing successful combat sequences for re-use

Definition statement

This subgroup covers:

- Simulation of cognitive functions for NPC
- Artificial intelligence game engines
- Automatic adaptation of the game difficulty to the player's skill and style of play

A63F 13/71

using secure communication between game devices and game servers, e.g. by encrypting game data or authenticating players

Informative references

Attention is drawn to the following places, which may be of interest for search:

network security	H04L 29/06

A63F 13/73

Authorising game programs or game devices, e.g. checking authenticity

Definition statement

This subgroup covers:

- Techniques restricting player access to game devices
- Techniques restricting access to the content of a game recording medium
- Techniques restricting access to game information files, being stored locally or distributed via a network.

In the example below, security devices 710 are entitled by a gaming authority 760 and provide conditional access to game device 702.

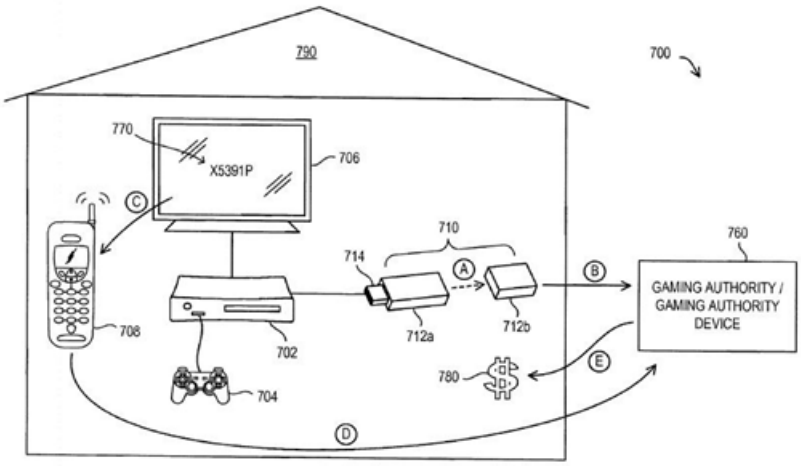

Informative references

Attention is drawn to the following places, which may be of interest for search:

computer security	G06F 21/00

A63F 13/75

Enforcing rules, e.g. detecting foul play or generating lists of cheating players

Definition statement

This subgroup covers:

The detection and classification of player's activity into foul play and the imposition of game penalties.

A63F 13/77

involving data related to game devices or game servers, e.g. configuration data, software version or amount of memory

Definition statement

This subgroup covers:

Techniques for executing or distributing game software based on hardware of software characteristics of game servers or game devices

A63F 13/792

for payment purposes, e.g. monthly subscriptions

Informative references

Attention is drawn to the following places, which may be of interest for search:

payment protocols	G06Q 20/00
apparatus actuated by coins or the like for games	G07F 17/32

A63F 13/795

for finding other players; for building a team; for providing a buddy list

Definition statement

This subgroup covers:

- Inviting players to multi-player games running on a network.
- Associating players with a group of players based on preferences.
- Using information from social network services in a game.

A63F 13/798

for assessing skills or for ranking players, e.g. for generating a hall of fame (computing the game score A63F 13/46)

Definition statement

This subgroup covers:

Evaluating players and producing ranking lists in multi-player games running on a network.

References relevant to classification in this group

This subgroup does not cover:

computing the game score	A63F 13/46

A63F 13/803

Driving vehicles or craft, e.g. cars, airplanes, ships, robots or tanks

Informative references

Attention is drawn to the following places, which may be of interest for search:

simulators for teaching control of vehicles or other crafts	G09B 9/02

A63F 13/814

Musical performances, e.g. by evaluating the player's ability to follow a notation

Informative references

Attention is drawn to the following places, which may be of interest for search:

evaluating musical performance in general	G10H 1/00
evaluating musical performance for karaoke	G10H 1/36
evaluating musical performance for rhythm or tempo	G10H 1/40
evaluating musical performance for pitch	G10H 3/12

A63F 13/843

involving concurrently two or more players on the same game device, e.g. requiring the use of a plurality of controllers or of a specific view of game data for each player

Definition statement

This subgroup covers:

Techniques for providing multiplayer games on the same game device by offering each player her own input device. Typically, a different view is displayed for each character on a different output area of the display device if they are too far one from the other, and a single view is used when the characters are close enough.

In the examples below, the screen is subdivided horizontally or vertically into two regions, allowing to render the game from the perspective of each of the two players.

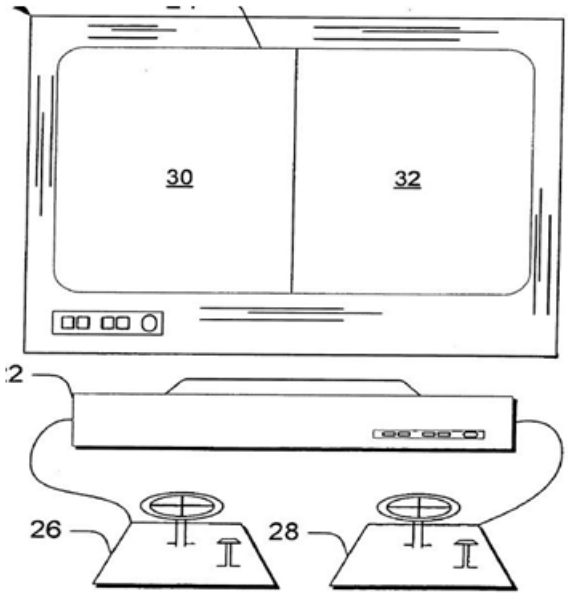

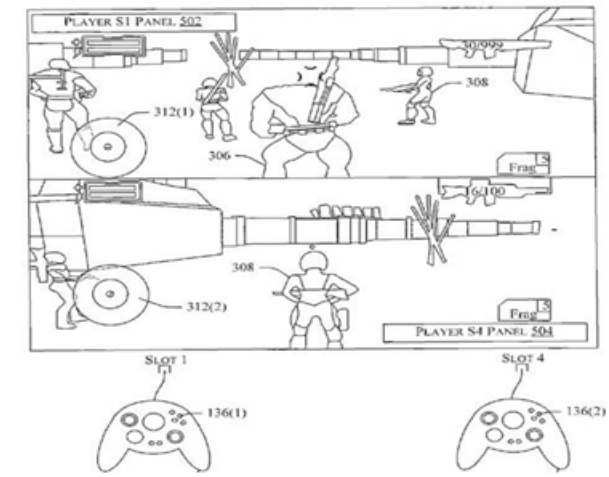

A63F 13/87

Communicating with other players during game play, e.g. by e-mail or chat

Definition statement

This subgroup covers:

The use of peer-to-peer or one-to-many communications in multi-player games running on a network.

A63F 13/90

Constructional details or arrangements of video game devices not provided for in groups A63F 13/20 or A63F 13/25, e.g. housing, wiring, connections or cabinets

Definition statement

This subgroup covers:

Structural or electrical aspects of the game device hardware.

In the example below, an arcade machine has changeable input means, which can be fixed to the housing but later replaced if the type of game changes.

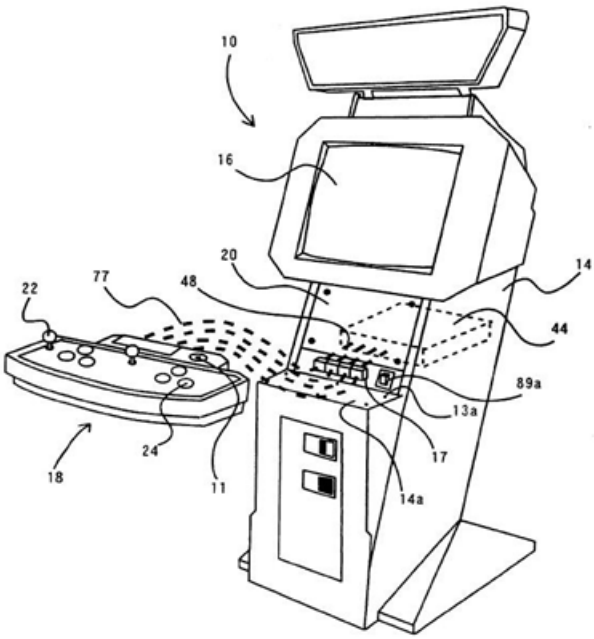

References relevant to classification in this group

This subgroup does not cover:

input arrangements of video game devices	A63F 13/20
output arrangements of video game devices	A63F 13/25

Informative references

Attention is drawn to the following places, which may be of interest for search:

constructional details of input arrangements	A63F 13/24

A63F 13/92

Video game devices specially adapted to be hand-held while playing

Definition statement

This subgroup covers:

Dedicated game devices, where the form factor, size, weight, button arrangements or compact design make them suitable to be held at least in a hand. Such devices depart from generic hand-held devices, such as PDA or mobile phones, which can run games but are not specially designed for playing.

A63F 13/95

Storage media specially adapted for storing game information, e.g. video game cartridges

Definition statement

This subgroup covers:

- Recording medium specially adapted to game devices
- Use of storage medium before, during or after game execution, e.g. game loading from a disk

In the example below, a dedicated game cartridge storing a game program can be inserted into a game machine.

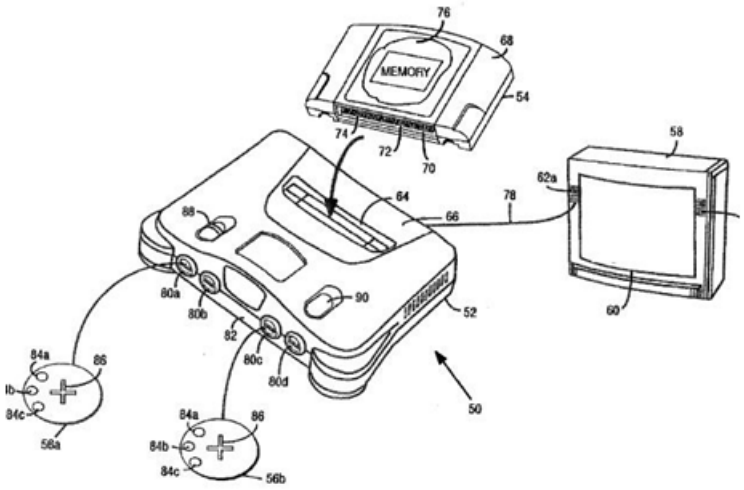

A63F 13/98

Accessories, i.e. detachable arrangements optional for the use of the video game device, e.g. grip supports of game controllers

Definition statement

This subgroup covers:

Accessories, which are optional for playing the game (i.e. as opposed to input means, which are essential). They may add for example comfort or convenience to the game experience.

In the examples below, accessories are used to support a hand-held game device or a game controller.

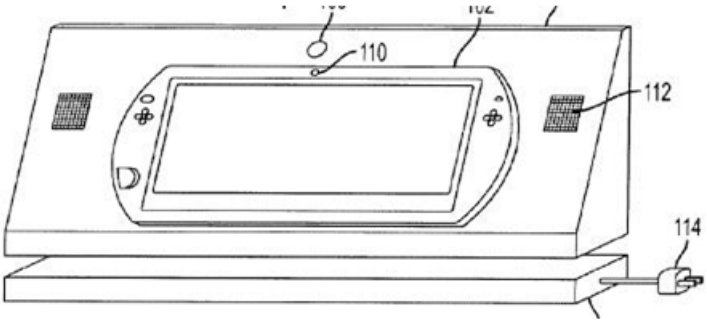

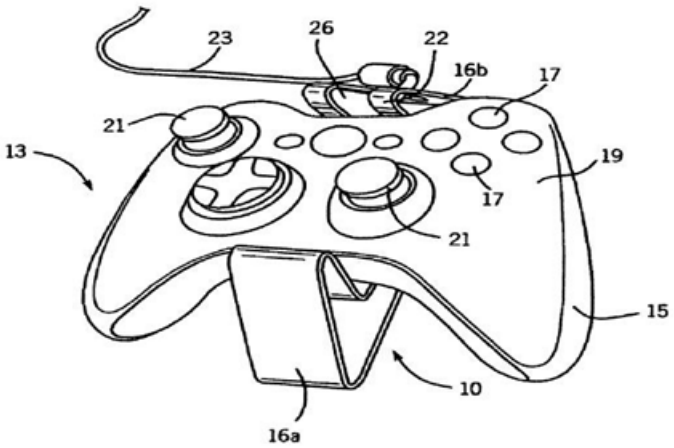

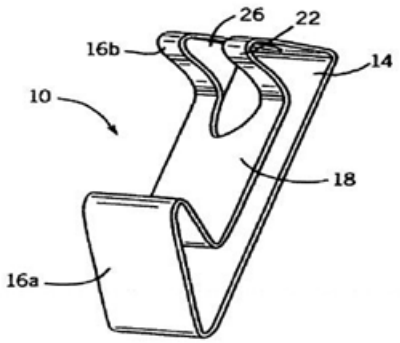

Informative references

Attention is drawn to the following places, which may be of interest for search:

input arrangements for game devices	A63F 13/20
output arrangements for game devices	A63F 13/25

A63F 2250/49

with provisions for connecting to a part of the body

Informative references

Attention is drawn to the following places, which may be of interest for search:

Games or toys connected to, or combined with a hanger or ornament, e.g. bracelet, headband, necklace, ring	A63F 2009/002

A63F 2250/505

made from a blank

Definition statement

This subgroup covers:

Game elements made from a blank, i.e. a piece cut from sheet for subsequent shaping

Glossary of terms

In this subgroup, the following terms (or expressions) are used with the meaning indicated:

Blank	A piece cut from sheet for subsequent shaping

A63F 2300/10

characterized by input arrangements for converting player-generated signals into game device control signals

Definition statement

This subgroup covers:

Input arrangements for game devices. Covered are here only input devices, which have been specially adapted for playing games and are usually distinguished by their shape, the number or arrangement of buttons.

Informative references

Attention is drawn to the following places, which may be of interest for search:

Input arrangements or combined input and output arrangements for interaction between user and computer	G06F 3/01
Pointing devices displaced or positioned by the user	**G06F3/33**

Special rules of classification within this group

Generic input devices such as a mouse which could also be used in a game are covered in the function place G03F 3/00.

A63F 2300/1012

involving biosensors worn by the player, e.g. for measuring heart beat, limb activity

Definition statement

This subgroup covers:

Using sensors worn by the player, e.g. for measuring heart beat or leg activity.

For examples of the subject matter covered by this Indexing Code, see US5672107, EP1275420, JP2003033572, JP11047445, JP7289734.

A63F 2300/1018

Calibration; Key and button assignment

Definition statement

This subgroup covers:

Setup operations, e.g. calibration, key configuration or button assignment.

For examples of the subject matter covered by this Indexing Code, see US2006116203, JP2006149927, JP2283390.

A63F 2300/1025

details of the interface with the game device, e.g. USB version detection

Definition statement

This subgroup covers:

For interfacing with the game device, e.g. specific interfaces between game controller and game console. For examples of the subject matter covered by this Indexing Code, see US6514143, US2001009564, JP2001147767, JP2001202168.

Informative references

Attention is drawn to the following places, which may be of interest for search:

Interfaces for pointing devices in general	G06F 3/038

A63F 2300/1031

using a wireless connection, e.g. Bluetooth, infrared connections

Definition statement

This subgroup covers:

For examples of the subject matter covered by this Indexing Code, see US2002098889, US2006111187, JP2002140154, JP2004329300.

Informative references

Attention is drawn to the following places, which may be of interest for search:

Wireless communication networks	H04W

A63F 2300/1037

being specially adapted for converting control signals received from the game device into a haptic signal, e.g. using force feedback

Definition statement

This subgroup covers:

Generating tactile feedback signals via the game input device, e.g. force feedback.

For examples of the subject matter covered by this Indexing Code, see US2006046843, US2007182708, JP2006068210, JP2005056267.

A63F 2300/1043

being characterized by constructional details

Definition statement

This subgroup covers:

Constructional details thereof, e.g. controllers with detachable joystick handles.

For examples of the subject matter covered by this Indexing Code, see EP1586356, EP1475131, US2004142749, JP2005296432, JP2004329915, JP2004215856.

Informative references

Attention is drawn to the following places, which may be of interest for search:

Constructional details or arrangements of video game devices	A63F 13/90

A63F 2300/105

using inertial sensors, e.g. accelerometers, gyroscopes

Definition statement

This subgroup covers:

For examples of the subject matter covered by this Indexing Code, see EP1062994, WO2004009196, JP2007296219.

Informative references

Attention is drawn to the following places, which may be of interest for search:

Acceleration sensors per se	G01P

A63F 2300/1056

involving pressure sensitive buttons

Definition statement

This subgroup covers:

Using pressure sensors, e.g. generating a signal proportional to the pressure applied by the player.

For examples of the subject matter covered by this Indexing Code, see US2007281787, US2004147317, JP2007299706, JP2004261193.

A63F 2300/1062

being specially adapted to a type of game, e.g. steering wheel

Definition statement

This subgroup covers:

Specially adapted to a particular type of game, e.g. steering wheels.

For examples of the subject matter covered by this Indexing Code, see US5056787, US5813864, US6312335, JP2114982, JP9149957, JP10214155.

A63F 2300/1068

being specially adapted to detect the point of contact of the player on a surface, e.g. floor mat, touch pad

Definition statement

This subgroup covers:

For locating contacts on a surface, e.g. floor mats or touch pads.

For examples of the subject matter covered by this Indexing Code, see US2007015588, JP2000293292, JP2007018372, JP2004337504.

A63F 2300/1075

using a touch screen

Definition statement

This subgroup covers:

The surface being also a display device, e.g. touch screens.

For examples of the subject matter covered by this Indexing Code, see US2005159223, US2006019752, JP2005204754, JP3734819B1.

A63F 2300/1081

Input via voice recognition

Definition statement

This subgroup covers:

For detecting acoustic signals, e.g. using a microphone. Microphones allowing the player to enter a voice command for, e.g. providing additional control of his/her character.

For examples of the subject matter covered by this Indexing Code, see US2007178952, JP2000181676, JP2002136764, JP2005103241.

A63F 2300/1087

comprising photodetecting means, e.g. a camera

Definition statement

This subgroup covers:

Comprising photodetecting means, e.g. cameras, photodiodes or infrared cells.

For examples of the subject matter covered by this Indexing Code, see US2005208999, US6811492, JP7185131, JP2003010541, JP2004085524, JP2005230139.

A63F 2300/20

characterised by details of the game platform

Definition statement

This subgroup covers:

Details of the game device.

A63F 2300/201

Playing authorisation given at platform level

Definition statement

This subgroup covers:

Authorising game programs or game devices, e.g. checking authenticity of the recording medium.

For examples of the subject matter covered by this Indexing Code, see US2007092118 ([44]-[49]), JP2007089732.

Informative references

Attention is drawn to the following places, which may be of interest for search:

Computer security	G06F 21/00

A63F 2300/203

Image generating hardware

Definition statement

This subgroup covers:

Specially adapted for generating image data, e.g. circuitry for displaying objects on a television screen.

For examples of the subject matter covered by this Indexing Code, see EP1585062, EP1469382, EP0553532, JP2005287756, JP2004318139, JP2003126550.

A63F 2300/204

the platform being a handheld device

Definition statement

This subgroup covers:

Game devices specially adapted to be portable, i.e. held in at least one hand while playing.

For examples of the subject matter covered by this Indexing Code, see US6764400, US2002047237, JP10235014, JP2000051517.

References relevant to classification in this subgroup

This subgroup does not cover:

Constructional details of input arrangements	A63F 2300/1043

A63F 2300/205

for detecting the geographical location of the game platform

Definition statement

This subgroup covers:

Using geographical information, e.g. location of the game device or player using GPS.

For examples of the subject matter covered by this Indexing Code, see US2002063655 ([38]-[44]), JP2002159743.

A63F 2300/206

Game information storage, e.g. cartridges, CD ROM's, DVD's, smart cards

Definition statement

This subgroup covers:

Storage medium specially adapted for storing game information, e.g. game cartridge.

A63F 2300/207

for accessing game resources from local storage, e.g. streaming content from DVD

Definition statement

This subgroup covers:

Involving loading game data from a removable recording medium, e.g. streaming from a DVD.

For examples of the subject matter covered by this Indexing Code, see WO03032127 (p.8, l.16 - p.10, l.3), US6949023 ([3], [4], [73]-[82]), JP2005505362T, JP2000107455.

A63F 2300/208

for storing personal settings or data of the player

Definition statement

This subgroup covers:

Involving personal data of the player, e.g. player profile, personal settings.

For examples of the subject matter covered by this Indexing Code, see US2003109312 ([32]-[35]), JP2001104646.

A63F 2300/209

characterized by low level software layer, relating to hardware management, e.g. Operating System, Application Programming Interface

Definition statement

This subgroup covers:

Low level software layer, relating to hardware management, e.g. Operating System, API.

For examples of the subject matter covered by this Indexing Code, see US2003154367 ([57]-[65]), US6672963 (abstract), JP2000047876.

A63F 2300/30

characterized by output arrangements for receiving control signals generated by the game device

Definition statement

This subgroup covers:

Output arrangements for game devices.

Informative references

Attention is drawn to the following places, which may be of interest for search:

Digital output to display device	G06F 3/14
Control of display in general	G09G

A63F 2300/301

using an additional display connected to the game console, e.g. on the controller

Definition statement

This subgroup covers:

Having at least one additional display device, e.g. on the game controller or outside a game booth.

For examples of the subject matter covered by this Indexing Code, see US20070015577.

A63F 2300/302

specially adapted for receiving control signals not targeted to a display device or game input means, e.g. vibrating driver's seat, scent dispenser

Definition statement

This subgroup covers:

Responding to control signals received from the game device for affecting ambient conditions, e.g. for vibrating player's seats, activating scent dispensers or affecting temperature or light.

For examples of the subject matter covered by this Indexing Code, see EP0970730.

References relevant to classification in this subgroup

This subgroup does not cover:

Controlling visual or acoustic output signals based on the game progress	A63F 2300/6063, A63F 2300/66

A63F 2300/303

for displaying additional data, e.g. simulating a Head Up Display

Definition statement

This subgroup covers:

Using indicators, e.g. showing the condition of a game character on screen.

For examples of the subject matter covered by this Indexing Code, see US2007149266 (circular gauge, [5]-[6], [62]-[64]), EP1787697 (showing tire load in driving game), JP2007167153.

A63F 2300/305

for providing a graphical or textual hint to the player

Definition statement

This subgroup covers:

For graphically or textually suggesting an action, e.g. by displaying an arrow indicating a turn in a driving game.

For examples of the subject matter covered by this Indexing Code, see US2007111768, JP2006031670, JP2002360921.

A63F 2300/306

for displaying a marker associated to an object or location in the game field

Definition statement

This subgroup covers:

For tagging game characters, game objects or locations in the game scene, e.g. displaying a circle under the character controlled by the player.

For examples of the subject matter covered by this Indexing Code, see EP0844580 (marker at soccer player's feet, figure 7, claim 5), JP2006212423.

A63F 2300/307

for displaying an additional window with a view from the top of the game field, e.g. radar screen

Definition statement

This subgroup covers:

For examples of the subject matter covered by this Indexing Code, see US2002006817 (soccer game shows 1 of 3 radars, [4]-[6], [41]-[51]), JP11128538, JP2002210235.

References relevant to classification in this subgroup

This subgroup does not cover:

Using a plurality of virtual cameras concurrently	A63F 2300/6669

A63F 2300/308

Details of the user interface

Definition statement

This subgroup covers:

For prompting the player, e.g. by displaying a game menu.

For examples of the subject matter covered by this Indexing Code, see EP1273326, US2005176486 (selecting soccer players on touch screen, [6], [134]-[138]), JP2005218779

Informative references

Attention is drawn to the following places, which may be of interest for search:

Interactions techniques for graphical user interfaces	G06F 3/048

A63F 2300/40

characterised by details of platform network

Definition statement

This subgroup covers:

Interconnection arrangements between game servers and game devices; Interconnection arrangements between game devices; Interconnection arrangements between game servers.

Informative references

Attention is drawn to the following places, which may be of interest for search:

Interconnection arrangements in generic data networks	H04L

A63F 2300/402

Communication between platforms, i.e. physical link to protocol

Definition statement

This subgroup covers:

Communication aspects specific to video games, e.g. between several handheld game devices at close range.

Informative references

Attention is drawn to the following places, which may be of interest for search:

Communication control characterised by protocols	H04L 29/06

A63F 2300/403

Connection between platform and handheld device

Definition statement

This subgroup covers:

Between game devices with different hardware characteristics, e.g. hand-held game devices connectable to game consoles or arcade machines.

A63F 2300/404

characterized by a local network connection

Definition statement

This subgroup covers:

Using a local connection.

Informative references

Attention is drawn to the following places, which may be of interest for search:

LAN in general	H04L 12/28

A63F 2300/405

being a wireless ad hoc network, e.g. Bluetooth, Wi-Fi, Pico net

Definition statement

This subgroup covers:
Involving a wireless network, e.g. Bluetooth, Wi-Fi or piconet.

Informative references

Attention is drawn to the following places, which may be of interest for search:

Wireless communication networks	H04W

A63F 2300/406

Transmission via wireless network, e.g. pager or GSM

Definition statement

This subgroup covers:
Using wireless networks, e.g. cellular phone networks.

Informative references

Attention is drawn to the following places, which may be of interest for search:

Wireless communication networks	H04W

A63F 2300/407

Data transfer via internet

Informative references

Attention is drawn to the following places, which may be of interest for search:

IP networks per se	H04L 29/06

A63F 2300/408

Peer to peer connection

Informative references

Attention is drawn to the following places, which may be of interest for search:

Peer-to-peer networking in general	H04L 29/08

A63F 2300/409

Data transfer via television network

Informative references

Attention is drawn to the following places, which may be of interest for search:

Interactive television	H04N 21/00

A63F 2300/51

Server architecture

Definition statement

This subgroup covers:

Hardware details of game servers.

A63F 2300/513

server hierarchy, e.g. local, regional, national or dedicated for different tasks, e.g. authenticating, billing

Definition statement

This subgroup covers:

Involving special game server arrangements, e.g. regional servers connected to a national server or a plurality of servers managing partitions of the game world.

For examples of the subject matter covered by this Indexing Code, see EP1407803 (abstract, paragraphs [52],[58],[61]-[81], claim 1, fig 11).

A63F 2300/516

connected to a local network, e.g. in a plane, hotel

Definition statement

This subgroup covers:

Particular local network, e.g. on a plane, in a train, in a hotel.

For examples of the subject matter covered by this Indexing Code, see WO2006062641 (figure 1, claim).

A63F 2300/532

using secure communication, e.g. by encryption, authentication

Definition statement

This subgroup covers:

Using secure communication between game devices and game servers, e.g. by encrypting game data or authenticating players.

For examples of the subject matter covered by this Indexing Code, see EP1519531 (abstract. figures 5,6).

Informative references

Attention is drawn to the following places, which may be of interest for search:

Network security	H04L 29/06

A63F 2300/534

for network load management, e.g. bandwidth optimization, latency reduction

Definition statement

This subgroup covers:

Adapting the progress of the game according to the network or server load, e.g. for reducing latency due to different connection speeds between game clients.

For examples of the subject matter covered by this Indexing Code, see WO02098526 (abstract, page 20: line 3 and following.

A63F 2300/538

for performing operations on behalf of the game client, e.g. rendering

Definition statement

This subgroup covers:

Performing operations on behalf of game clients with restricted processing capabilities, e.g. game servers transform changing game scene into an MPEG-stream for transmitting to a mobile phone or a thin client.

For examples of the subject matter covered by this Indexing Code, see WO03095050 (abstract, figure 2).

A63F 2300/55

Details of game data or player data management

Definition statement

This subgroup covers:

For managing game device-related data or player-related data.

A63F 2300/5506

using advertisements

Definition statement

This subgroup covers:

Using advertising information.

For examples of the subject matter covered by this Indexing Code, see US6928414 (abstract, paragraphs [23],[84], figure 3).

Informative references

Attention is drawn to the following places, which may be of interest for search:

Advertising per se	G06Q 30/00

A63F 2300/5513

involving billing

Definition statement

This subgroup covers:

For payment purposes, e.g. monthly subscriptions.

For examples of the subject matter covered by this Indexing Code, see US2006168119 (abstract).

Informative references

Attention is drawn to the following places, which may be of interest for search:

Payment protocols	G06Q 20/00
Coin-freed apparatus and like for games	G07F 17/32

A63F 2300/552

for downloading to client devices, e.g. using OS version, hardware or software profile of the client device

Definition statement

This subgroup covers:

Involving data related to game devices or game servers, e.g. configuration data, software version or amount of memory.

For examples of the subject matter covered by this Indexing Code, see EP1291048 (abstract, figure 3, paragraph [20]).

A63F 2300/554

by saving game or status data

Definition statement

This subgroup covers:

Saving the game status; Suspending or ending the game.

For examples of the subject matter covered by this Indexing Code, see WO2004026425 (page1:line 20 through page 2:line 13, figures 2,4).

A63F 2300/5546

using player registration data, e.g. identification, account, preferences, game history

Definition statement

This subgroup covers:

Involving player-related data, e.g. identities, accounts, preferences or play histories.

For examples of the subject matter covered by this Indexing Code, see EP1669117 (paragraph [33], figures 2,3).

A63F 2300/556

Player lists, e.g. online players, buddy list, black list

Definition statement

This subgroup covers:

For finding other players, e.g. for matching opponents or building a team by skill level, geographical area, preferences, play style or for providing a buddy list.

For examples of the subject matter covered by this Indexing Code, see US20030104868 (abstract, claim 1, figures 1,9).

A63F 2300/5573

player location

Definition statement

This subgroup covers:

Involving game device location.

For examples of the subject matter covered by this Indexing Code, see WO2007010336 (abstract, paragraphs [2], [4], [48], [49], figures 1,2).

A63F 2300/558

by assessing the players' skills or ranking

Definition statement

This subgroup covers:

For assessing skills or ranking players, e.g. for generating a hall of fame.

For examples of the subject matter covered by this Indexing Code, see US 20040198495 (abstract, paragraphs [7],[34],figures 1,4).

References relevant to classification in this subgroup

This subgroup does not cover:

Computing the game score	A63F 13/46

A63F 2300/5586

for enforcing rights or rules, e.g. to prevent foul play

Definition statement

This subgroup covers:

Enforcing rules, e.g. detecting foul play or generating lists of cheating players.

For examples of the subject matter covered by this Indexing Code, see WO2007109130 (abstract, figures 1,3,7).

A63F 2300/57

details of game services offered to the player

Definition statement

This subgroup covers:

Providing additional services to players.

A63F 2300/572

Communication between players during game play of non game information, e.g. e-mail, chat, file transfer, streaming of audio and streaming of video

Definition statement

This subgroup covers:

Communicating with other players during game play, e.g. by e-mail or chat.

For examples of the subject matter covered by this Indexing Code, see US6241612 (abstract, figure 3).

Informative references

Attention is drawn to the following places, which may be of interest for search:

Conference services in data networks	H04L 12/18
Message switching systems, e.g. e-mail systems	H04L 12/58

A63F 2300/6009

for importing or creating game content, e.g. authoring tools during game development, adapting content to different platforms, use of a scripting language to create content

Definition statement

This subgroup covers:

Generating or modifying game content before or while executing the game program e.g. specific authoring tools for game development or game-integrated level editor. adapting content to different game platforms, using a scripting language to create content.

A63F 2300/6018

where the game content is authored by the player, e.g. level editor or by game device at runtime, e.g. level is created from music data on CD

Definition statement

This subgroup covers:

By the player, e.g. authoring using a level editor.

For examples of the subject matter covered by this Indexing Code, see US2001037181 (abstract, [174]-[188]), JP2001184525.

A63F 2300/6027

using adaptive systems learning from user actions, e.g. for skill level adjustment

Definition statement

This subgroup covers:

Adaptively or by learning from player actions, e.g. skill level adjustment or by storing successful combat sequences for re-use.

A63F 2300/6036

for offering a minigame in combination with a main game

Definition statement

This subgroup covers:

For offering mini-games in combination with main games, e.g. while loading the main game content.

A63F 2300/6045

for mapping control signals received from the input arrangement into game commands

Definition statement

This subgroup covers:

By mapping the input signals into game commands, e.g. mapping the displacement of a stylus on a touch screen to the steering angle of a virtual vehicle.

For examples of the subject matter covered by this Indexing Code, see US2006252540 ([92], [93], [96], [98]), EP1125610 (claim 1), JP2006311966.

A63F 2300/6054

by generating automatically game commands to assist the player, e.g. automatic braking in a driving game

Definition statement

This subgroup covers:

Automatically for the purpose of assisting the player, e.g. automatic braking in a driving game.

For examples of the subject matter covered by this Indexing Code, see US6764401 (abstract), US2003032466 ([1]-[4], [49]-[55]), JP2001046742, JP2003053035.

A63F 2300/6072

of an input signal, e.g. pitch and rhythm extraction, voice recognition

Definition statement

This subgroup covers:

Involving acoustic input signals, e.g. by using the results of pitch or rhythm extraction or voice recognition.

References relevant to classification in this subgroup

This subgroup does not cover:

Input arrangements for game devices for detecting acoustic signals	A63F 2300/1081

Informative references

Attention is drawn to the following places, which may be of interest for search:

Evaluating musical performance in general	G10H 1/00,
Evaluating musical performance for karaoke	G10H 1/36,
Evaluating musical performance rhythm or tempo	G10H 1/40
Evaluating musical performance and for pitch	G10H 3/12
Speech recognition	G10L
Microphones	H04R

A63F 2300/6081

generating an output signal, e.g. under timing constraints, for spatialization

Definition statement

This subgroup covers:

Involving acoustic signals, e.g. for simulating revolution-dependent engine sound in a driving game or reverberation against a virtual wall.

Informative references

Attention is drawn to the following places, which may be of interest for search:

Sound-producing devices	G10H, G10K, H04R

A63F 2300/609

for unlocking hidden game elements, e.g. features, items, levels

Definition statement

This subgroup covers:

By enabling or updating specific game elements, e.g. unlocking hidden features, items, levels or versions.

A63F 2300/63

for controlling the execution of the game in time

Definition statement

This subgroup covers:

Controlling the progress of the game.

A63F 2300/632

by branching, e.g. choosing one of several possible story developments at a given point in time

Definition statement

This subgroup covers:

Involving branching, e.g. choosing one of several possible scenarios at a given point in time.

For examples of the subject matter covered by this Indexing Code, see US2007010325 ([4], [69], [72], [73]), JP2007014457.

A63F 2300/634

for replaying partially or entirely the game actions since the beginning of the game

Definition statement

This subgroup covers:

Partially or entirely replaying previous game actions.

A63F 2300/636

involving process of starting or resuming a game

Definition statement

This subgroup covers:

Starting a game, e.g. waiting for other players to join a multiplayer session or activating a game device.

A63F 2300/638

according to the timing of operation or a time limit

Definition statement

This subgroup covers:

Involving the timing of operations, e.g. performing an action within a time limit.

A63F 2300/64

for computing dynamical parameters of game objects, e.g. motion determination or computation of frictional forces for a virtual car

Definition statement

This subgroup covers:

Simulating properties, behaviour or motion of objects in the game world, e.g. computing tyre load in a car race game . e.g. gravity direction is variable and depends on input signal.

For examples of the subject matter covered by this Indexing Code, see US20090005139 (player-chosen gravity direction), US20060258448 (planet's gravity is controlled by player [71]-[77]), US20090325694 (switching between classical and quantum physics).

A63F 2300/643

by determining the impact between objects, e.g. collision detection

Definition statement

This subgroup covers:

Using determination of contact between game characters or game objects, e.g. to avoid collision between virtual racing cars.

For examples of the subject matter covered by this Indexing Code, see US2003162592 (objects are glued when colliding, figure 2B, figure 8A, [118]-[120]), EP2216082 (size of contact area decreases if tennis player looses balance [38]-[39]), US2002024521.

Informative references

Attention is drawn to the following places, which may be of interest for search:

Collision detection in image processing	G06T 19/00

A63F 2300/646

for calculating the trajectory of an object

Definition statement

This subgroup covers:

Using trajectories of game objects, e.g. of a golf ball according to the point of impact.

For examples of the subject matter covered by this Indexing Code, see US20090051690 (NPC trajectory randomly chosen between 2+ curves), US20090118011 (drawn trajectory is analysed to suggest user input, claim 1).

A63F 2300/65

for computing the condition of a game character

Definition statement

This subgroup covers:

By computing conditions of game characters, e.g. stamina, strength, motivation or energy level.

For examples of the subject matter covered by this Indexing Code, see US20030144045 (psychological pressure in basketball game).

A63F 2300/66

for rendering three dimensional images

Definition statement

This subgroup covers:

Involving aspects of the displayed game scene. instructing the image rendering of a game scene on the basis of game parameters; details of the rendering of the 3D game scene are classified in the corresponding function place G06T.

For examples of the subject matter covered by this Indexing Code, see EP2000185 (NPC character is removed from scene if not in player character field of vision, [3], [42]-[44]), US20020198047 (2 game fields are displayed together, [3], [4], claim 1).

Informative references

Attention is drawn to the following places, which may be of interest for search:

Two dimensional image generation	G06T 11/00
Animation in general	G06T 13/00
Three dimensional image rendering	G06T 15/00

A63F 2300/6607

for animating game characters, e.g. skeleton kinematics

Definition statement

This subgroup covers:

Computing the motion of game characters with respect to other game characters, game objects or elements of the game scene, e.g. for simulating the behaviour of a group of virtual soldiers or for path finding. e.g. for controlling clone characters, for intercepting a soccer ball.

For examples of the subject matter covered by this Indexing Code, see EP1228794 (2nd character automatically controlled or not), EP1586357 (clones in fixed configuration), EP1203603 (jump or push obstacle depending on speed), JP2005287757.

A63F 2300/6623

for animating a group of characters

Definition statement

This subgroup covers:

Specially adapted to simulate their behaviour as a group, e.g. bird flock, school of fishes, military formation.

A63F 2300/6646

for the computation and display of the shadow of an object or character

Informative references

Attention is drawn to the following places, which may be of interest for search:

Shadowing in three dimensional image rendering	G06T 15/60

A63F 2300/6661

for changing the position of the virtual camera

Definition statement

This subgroup covers:

Changing parameters of virtual cameras.

For examples of the subject matter covered by this Indexing Code, see EP0990458.

Informative references

Attention is drawn to the following places, which may be of interest for search:

Navigation in three-dimensional environments	G06T 19/00

A63F 2300/6669

using a plurality of virtual cameras concurrently or sequentially, e.g. automatically switching between fixed virtual cameras when a character change rooms

Definition statement

This subgroup covers:

Using a plurality of virtual cameras concurrently or sequentially, e.g. automatically switching between fixed virtual cameras when a game character changes room or displaying a rear-mirror view in a car-driving game.

For examples of the subject matter covered by this Indexing Code, see US2003027637 (switching cameras in fight game depending on hit count, claim 1).

A63F 2300/6676

by dedicated player input

Definition statement

This subgroup covers:

According to dedicated instructions from player, e.g. using a secondary joystick to rotate the virtual camera around the player's character.

For examples of the subject matter covered by this Indexing Code, see US2006040740.

A63F 2300/6684

by dynamically adapting its position to keep a game object in its viewing frustrum, e.g. for tracking a character or a ball

Definition statement

This subgroup covers:

For examples of the subject matter covered by this Indexing Code, see EP0933105 (distance between player's car and camera depends on obstacles, [80]-[81]).

A63F 2300/6692

using special effects, generally involving post-processing, e.g. blooming

Definition statement

This subgroup covers:

Using special effects, generally involving post-processing, e.g. blurring of rendered frames.

For examples of the subject matter covered by this Indexing Code, see EP0948979, EP1744283, EP1170044, JP11272881, JP2005316926 and JP2002024857.

A63F 2300/69

Involving elements of the real world in the game world, e.g. measurement in live races, real video

Definition statement

This subgroup covers:

Automatically by game devices or servers from real world data, e.g. measurement in live racing competition. game level is created from music data on a CD.

A63F 2300/695

Imported photos, e.g. of the player

Definition statement

This subgroup covers:

For examples of the subject matter covered by this Indexing Code, see US2005219377 and JP2005284767.

References relevant to classification in this subgroup

This subgroup does not cover:

Input arrangements for game devices using photodetecting means	A63F 2300/1087

A63F 2300/80

specially adapted for executing a specific type of game

Definition statement

This subgroup covers:

Special adaptations for executing a specific game genre or game mode.

A63F 2300/8005

Athletics

Definition statement

This subgroup covers:

Athletic performances, e.g. track-and-field sports.

A63F 2300/8011

Ball

Definition statement

This subgroup covers:

Ball games, e.g. soccer or baseball.

A63F 2300/8017

Driving on land or water; Flying

Definition statement

This subgroup covers:
Driving vehicles or crafts, e.g. cars, airplanes, ships, robots or tanks.

Informative references

Attention is drawn to the following places, which may be of interest for search:

Simulators for teaching control of vehicles or other crafts	G09B 9/02

A63F 2300/8023

the game being played by multiple players at a common site, e.g. in an arena, theatre, shopping mall using a large public display

Definition statement

This subgroup covers:
Characterised by a large display in a public venue, e.g. in a movie theatre, stadium or game arena.

For examples of the subject matter covered by this Indexing Code, see US20060258457.

A63F 2300/8029

Fighting without shooting

Definition statement

This subgroup covers:
Hand-to-hand fighting, e.g. martial arts competition.

A63F 2300/8035

Virtual fishing

Definition statement

This subgroup covers:
Fishing.

A63F 2300/8041

Skating using skis, skates or board

Definition statement

This subgroup covers:
Gliding or sliding on surfaces, e.g. using skis, skates or boards.

A63F 2300/8047

Music games

Definition statement

This subgroup covers:
Using musical performances, e.g. by evaluating the player on the ability to follow a notation.

Informative references

Attention is drawn to the following places, which may be of interest for search:

Evaluating musical performance in general	G10H 1/00
For karaoke	G10H 1/36
Rhythm or tempo	G10H 1/40
For pitch	G10H 3/12

A63F 2300/8052

Ball team management

Definition statement

This subgroup covers:
Managing virtual sport teams.

A63F 2300/8058

Virtual breeding, eg. tamagotchi

Definition statement

This subgroup covers:
Fostering game characters.

A63F 2300/8076

Shooting

Definition statement

This subgroup covers:
Shooting of targets.

A63F 2300/8088

involving concurrently several players in a non-networked game, e.g. on the same game console

Definition statement

This subgroup covers:
Involving concurrently several players on the same game device, e.g. requiring the use of a plurality of controllers, of a split-screen or of a specific view of game data for each player.