A61H

PHYSICAL THERAPY APPARATUS, e.g. DEVICES FOR LOCATING OR STIMULATING REFLEX POINTS IN THE BODY; ARTIFICIAL RESPIRATION; MASSAGE; BATHING DEVICES FOR SPECIAL THERAPEUTIC OR HYGIENIC PURPOSES OR SPECIFIC PARTS OF THE BODY (methods or devices enabling invalids to operate an apparatus or a device not forming part of the body A61F 4/00; electrotherapy, magnetotherapy, radiation therapy, ultrasound therapy A61N)

Definition statement

This subclass covers:

Apparatus or processes which are not used for surgical purposes utilizing mechanical energy transmitted by direct physical contact with the external surface of the thorax portion of human bodies to induce or supplement normal breathing (e.g. iron lungs).

Apparatus or processes, which are not used for surgical purposes that are specially adapted to improve or promote the optical functioning of individuals (e.g. rectify defective vision, improve the natural operation of their eyes) by:

- contacting eyes or their muscles directly to move the eyes,
- subjecting the eyes of individuals to controlled muscle strain,
- utilizing stimulators, such as flash illumination, to cause movement of eyes of individuals in a controlled manner, or
- facilitating or training individuals through practice to move their own eyes in a beneficial manner.

Apparatus or devices that are explicitly designed for use by a single patient or disabled person for the purpose of helping them overcome a physical condition that impairs their ability to walk unassisted across the ground or similar support surface (e.g. crutches).

Apparatus or processes utilizing mechanical energy directly applied upon human bodies for therapy (e.g. massage). These therapy apparatus and processes are intended to facilitate the healing of diseases, promote or assist normal operation of a malfunctioning body part, reduce the impact of injuries, or beneficially influence the condition of disabled body parts either by the physical movement of body parts (e.g. devices for exercising a passive body member) or other types of physical stimulation (e.g. touching) transmitted though contact with:

- external body surfaces or
- surfaces of naturally occurring body cavities.

Apparatus or processes which are not used for surgical purposes utilizing mechanical energy directly applied to human bodies by physical contact therewith (e.g. chiropractic) to treat, alleviate the effects of, or prevent disease or bodily malfunctions (e.g. misalignments of bone, aberrant joint) solely by manipulation, adjustment, or realignment of at least a portion of the skeletal system of the body (e.g. bone joints, tendons, spinal columns) by either:

- impacting external surfaces of bodies to manipulate or adjust portions of their skeletons containing unbroken bones or
- pulling or pushing on the external surfaces of bodies to extend or compress portions of their skeletons containing unbroken bones.

Apparatus or processes which are not used for surgical purposes utilizing mechanical energy directly applied upon human bodies by physical contact (e.g. massage) to rub, stroke, knead, tap, vibrate, or otherwise move a portion of the external surface of human bodies, or the surfaces of their naturally occurring body cavities, to either:

- physically relax individuals,
- physically arouse or stimulate individuals, or

- counteract or relieve bodily pains.

Apparatus or processes which are not used for surgical purposes (e.g. baths) that are specially adapted for covering, soaking, or immersing human bodies, or portions of bodies, within fluids (e.g. steam, water) or fluent materials (e.g. sand, mud) in a manner that is distinct from the common bathing process for cleaning human bodies and is intended to either:

- counteract or relieve bodily pains,
- physically relax individuals,
- promote or assist healing of injured bodies or their parts, or
- restore to health, or alleviate the effects of sicknesses or other types of abnormal conditions on, bodies or their parts.

Apparatus or processes (e.g. breast baths) specially adapted for covering, soaking, or immersing only one particular part of the human body within fluids (e.g. steam, water) or fluent materials (e.g. sand, seaweed).

Articles of clothing (e.g. sweating suits for therapy) that at least partially enclose human bodies for the primary purpose of increasing the local temperature (e.g. insulated, include heating elements) or humidity (e.g. constructed of partially air tight material) of the portion of the human bodies covered to a point where the localized temperature or humidity is beyond the range that human beings normally consider physically comfortable (i.e. creates localized sauna-like environment) for therapy.

Specially adapted components for the above types of apparatus.

Auxiliary appliances or accessories specially adapted for use with any of the above types of apparatus or process (e.g. reflex point locators).

Other types of apparatus or processes which are not used for surgical (e.g. acupuncture devices) purposes that utilize mechanical energy directly applied to human bodies by physical contact for improving their functioning that are not specifically provided for elsewhere in another subclass.

Relationship between large subject matter areas

When used with animals

If an apparatus or process is usable for both humans and animals for the same purpose and in the same manner, and it is otherwise proper for this subclass, classification is made only in subclass A61H. Similar devices or processes to those covered by subclass A61H that are usable exclusively for animals, or are used in animals in a different manner or for different purposes than for humans, are classified in subclass A61D.

When used for physical relaxation

Subclass A61H covers apparatus or processes that are specially adapted to physically relax or stimulate individuals due either to

- mechanical energy being directly applied upon human body parts to cause their physical movement, or stimulation, by direct physical contact with external surfaces of the body or surfaces of naturally occurring cavities in the body (i.e. massage) or
- the calming or invigorating effects of bathing.

Subclass A61M covers devices or processes which are specially adapted to cause or precipitate a change in the state of consciousness of humans (e.g. induce sleep, awaken), or to increase or decrease the mental activity of humans while awake, which may also involve relaxing or stimulating individuals.

Medical Treatment

Several subclasses provide for apparatus or processes that are used for treating humans for medical conditions. The relationship between these subclasses is as follows:

Subclass A61B provides for surgical apparatus or processes in general.

Subclass A61B also provides for surgical apparatus or processes when

- surgical apparatus or processes are combined with means used for other types of treatment (e.g. therapy, massage) for medical conditions or
- the apparatus can be used both for surgery and for other types of treatment for medical conditions.

Subclass A61H provides for massage, chiropractic, or physical therapy apparatus or processes used for the treatment of disease, injuries, or disability (i.e. an abnormal condition of the body) by utilization of direct mechanical energy.

Subclass A61N provides for apparatus or processes used for the treatment of disease, injuries, or disability by utilization of forms of energy other than direct mechanical energy.

References relevant to classification in this subclass

This subclass does not cover:

Training or exercising equipment for animals	A01K 15/02
Garments with controlled internal environment	A41D 13/002
Ventilating, cooling or heating means in connection with bedsteads or mattresses	A47C 21/04
Apparatus for helping babies to walk	A47D 13/04
Baths; Showers; Appurtenances therefore for merely cleaning human bodies	A47K 3/00
Body washing or cleaning implements for merely cleaning human bodies	A47K 7/00
Dental implements for therapeutic treatment	A61C 19/06
Orthopaedic devices or methods	A61F 5/00
Devices for treatment of the eyes	A61F 9/00
Means for washing bed-ridden persons	A61G 7/00
Beds for promoting or observing sleep	**A61G7/043**
Blood pumps or devices for mechanical circulatory assistance	A61M 1/10
Sub aquatic intestinal cleaning	A61M 9/00
Devices for influencing the respiratory system of patients by gas treatment, e.g. mouth-to-mouth respiration	A61M 16/00
Devices for producing or ending sleep by mechanical, optical, or acoustical means (other than alarm clocks or the like)	A61M 21/00
Electrotherapy, magneto therapy, radiation therapy, ultrasound therapy	A61N
Electro medical massage devices applying continuous direct current by contact electrodes	A61N 1/26
Electrotherapy devices applying alternating or intermittent currents by contact electrodes	A61N 1/32
Applying ionized fluids to the human body for therapy	A61N 1/44
Exercising apparatus specially adapted for conditioning the cardio-vascular system, for training agility or co-ordination of movements	A63B 22/00
Exercising apparatus specially adapted for particular parts of the body	A63B 23/00
Exercising devices for feet or toes	A63B 23/10

Examples of places where the subject matter of this subclass is covered when specially adapted, used for a particular purpose, or incorporated in a larger system:

Accessory implements for clippers or shavers carrying out massage or other functions than cutting hair	B26B 19/48

Informative references

Attention is drawn to the following places, which may be of interest for search:

Methods or devices enabling patients or disabled persons to operate an apparatus or a device not forming part of the body	A61F 4/00

Glossary of terms

In this subclass, the following terms (or expressions) are used with the meaning indicated:

Therapy	Any medical treatment of an abnormal condition of a human or animal body (e.g. disease, impaired organ, injured limb) by means, instruments, devices, or methods that utilize forms of energy (e.g. mechanical energy) and which is not used for surgical purposes. In general, the treatment time for therapy is long-term relative to that for surgery which usually has a much more immediate effect on the body.
Disabled person	A human being that is unable to do a basic physical task (e.g. walking) without assistance due to a physical or mental impairment/condition.
Patient	A human being awaiting or undergoing any form of (a) medical care (e.g. testing) or treatment by medical staff (e.g. doctors, dentists, midwives, chiropractors) or (b) physical tending (e.g. feeding) by care providers (e.g. hospice or nursing home staff) due to impairment.

BODY PLANES

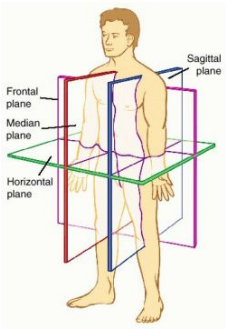

http://medical-dictionary.tfd.com/plane

The body-symmetrical plane is also called midsagittal plane or median plane.

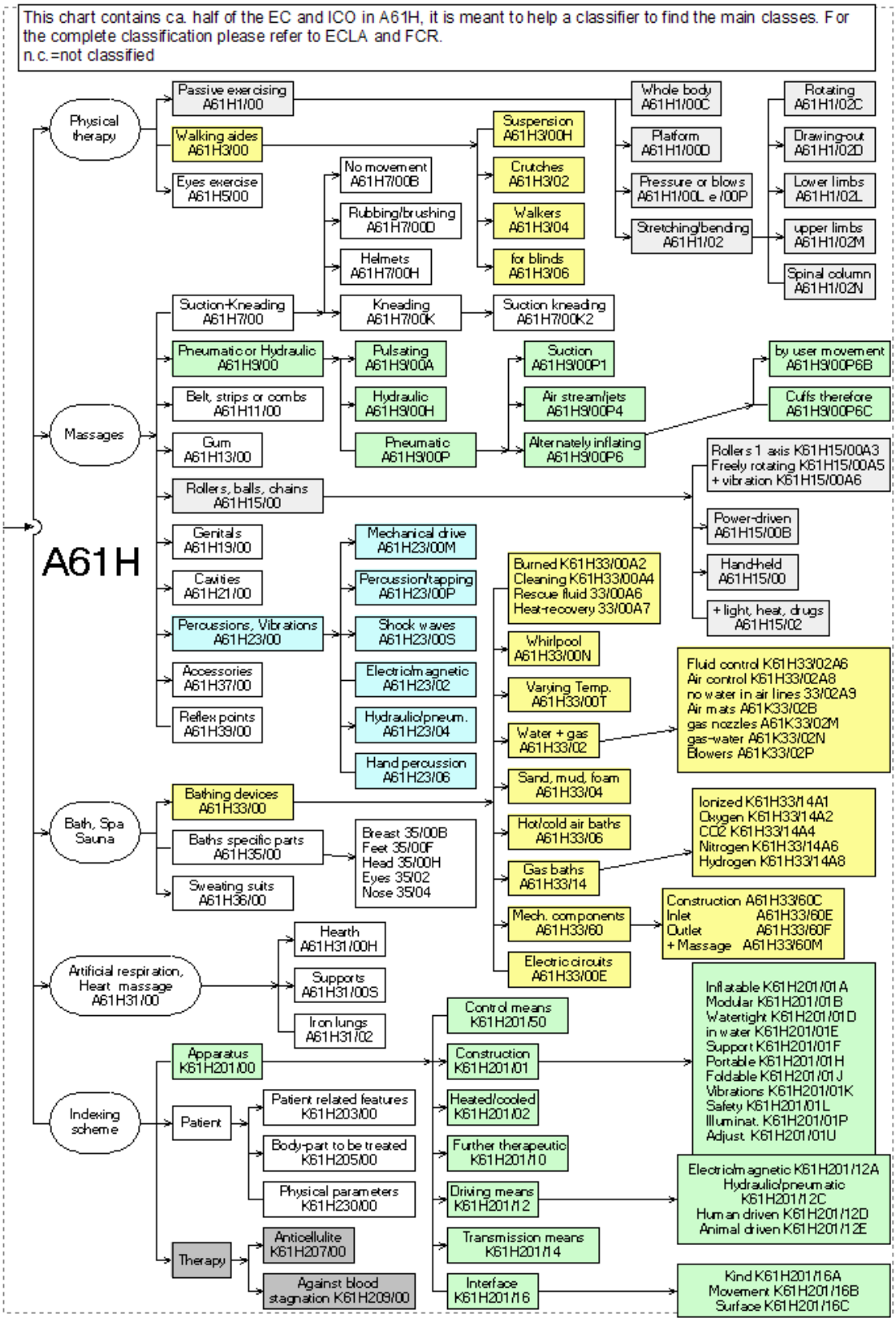

A61H 1/00

Apparatus for passive exercising (A61H 5/00 takes precedence); Vibrating apparatus {(driving means for vibrating A61H 23/00)}; Chiropractic devices, e.g. body impacting devices, external devices for briefly extending or aligning unbroken bones

Definition statement

This group covers:

Apparatus and processes intended to facilitate the healing of diseases, promote or assist normal operation of a malfunctioning body part, reduce the impact of injuries, or beneficially influence the condition of disabled body parts either by the physical movement of body parts (e.g. devices for exercising a passive body member) or other types of physical stimulation (e.g. pressure or blows on a part of the skeletal structure, vibration on the body).

Vibrating apparatus for passive exercising.

References relevant to classification in this group

This group does not cover:

Exercisers for the eyes	A61H 5/00
Percussion or vibration massaging means	A61H 23/00

Informative references

Attention is drawn to the following places, which may be of interest for search:

Active exercising has to be classified in A63B

Special rules of classification within this group

The driving means for vibrating are classified in A61H 23/00

For additional information the orthogonal classification (A61H 2201/00, A61H 2230/855) is used.

A61H 1/001

{Apparatus for applying movements to the whole body}

Informative references

Attention is drawn to the following places, which may be of interest for search:

Incorporated in furniture	A61H 2201/0138
Driving means	A61H 2201/12

A61H 1/003

{Rocking or oscillating around a horizontal axis transversal to the body}

References relevant to classification in this group

This subgroup does not cover:

Oscillating beds	A47C 21/006, A47D 9/02, B62B 9/22

Informative references

Attention is drawn to the following places, which may be of interest for search:

For artificial respiration or heart stimulation	A61H 31/00

A61H 1/005

{Moveable platform, e.g. vibrating or oscillating platform for standing, sitting, laying, leaning}

Informative references

Attention is drawn to the following places, which may be of interest for search:

Incorporated in furniture	A61H 2201/0138
Portable	A61H 2201/0157
Size reducing arrangement when not in use	A61H 2201/0161

Special rules of classification within this group

Vibration driving means are classified in A61H 23/00

A61H 1/006

{Apparatus for applying pressure or blows for compressive stressing of a part of the skeletal structure, e.g. for preventing or alleviating osteoporosis}

References relevant to classification in this group

This subgroup does not cover:

Chiropractic tables	A61G 13/009

A61H 1/008

{Apparatus for applying pressure or blows almost perpendicular to the body or limb axis, e.g. chiropractic devices for repositioning vertebrae, correcting deformation}

Definition statement

This subgroup covers:

Apparatus for chiropractic manipulation of the body of a user

References relevant to classification in this group

This subgroup does not cover:

Percussion or tapping massage	A61H 23/006

Informative references

Attention is drawn to the following places, which may be of interest for search:

Driving means	A61H 2201/12

A61H 1/02

Stretching or bending {or torsioning} apparatus for exercising

References relevant to classification in this group

This subgroup does not cover:

Device suitable for active OR passive exercising	A63B 21/00178
Electric motor for active or passive exercising	A63B 21/0058

Informative references

Attention is drawn to the following places, which may be of interest for search:

Driving means	A61H 2201/12
Interface with user	A61H 2201/16
Position of user	A61H 2203/04

A61H 2001/0203

{Rotation of a body part around its longitudinal axis}

Informative references

Attention is drawn to the following places, which may be of interest for search:

for active exercising	A63B 2023/003

A61H 2001/0207

{Nutating movement of a body part around its articulation}

Definition statement

This subgroup covers:

rocking, swaying, or nodding motion in the axis of rotation of a largely axially symmetric object, e.g. circular movement around a joint.

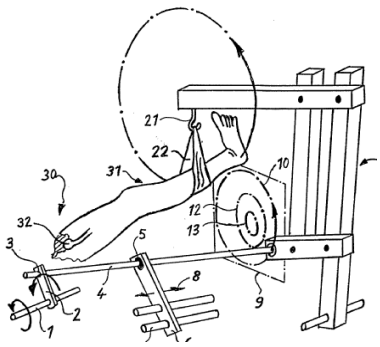

DE29714490U

A61H 2001/0211

{Walking coordination of arms and legs}

Informative references

Attention is drawn to the following places, which may be of interest for search:

Walking movement for legs	A61H 1/0262

A61H 1/0214

{by rotating cycling movement}

Informative references

Attention is drawn to the following places, which may be of interest for search:

Device suitable for active OR passive exercising	A63B 21/00178
Assisted exercising	A63B 21/00181
for active exercising	A63B 22/06
Rotating interface	A61H 2201/1671

A61H 1/0218

{Drawing-out devices (suspension devices for supporting the patient in upright walking or standing position A61H 3/008; orthopedic devices for non-surgical treatment A61F 5/01; stretching fractured limbs A61F 5/04)}

Informative references

Attention is drawn to the following places, which may be of interest for search:

Orthopaedic devices for non-surgical treatment	A61F 5/00
Stretching fractured limbs	A61F 5/04
Suspension devices for supporting in a standing position	A61H 3/008
Driving means	A61H 2201/12
Interface with user	A61H 2201/16
Control means	A61H 2201/50
Position of user	A61H 2203/04
Interface with user for active exercising	**A63B21/14**

A61H 1/0222

{Traction tables (A61H 1/0229 take precedence)}

Informative references

Attention is drawn to the following places, which may be of interest for search:

by hanging the patient upside down or inclined downwardly	A61H 2203/0493

A61H 1/0229

{by reducing gravity forces normally applied to the body, e.g. by lifting or hanging the body or part of it}

References relevant to classification in this group

This subgroup does not cover:

Suspension devices for a walking or standing position	A61H 3/008

Informative references

Attention is drawn to the following places, which may be of interest for search:

Patient immersed in liquid	A61H 2203/02
Patient hanging	A61H 2203/0481

A61H 2001/0233

{Pulsating, alternating, fluctuating}

Informative references

Attention is drawn to the following places, which may be of interest for search:

Percussion or vibration means	A61H 23/00
other driving means	A61H 2201/12

A61H 1/0237

{for the lower limbs}

Definition statement

This subgroup covers:

devices specifically made forstretching or bending passively a joint for therapy or for supporting the movement of a joint of a disabled person in a daily activity.

Informative references

Attention is drawn to the following places, which may be of interest for search:

for aiding disabled persons to walk	A61H 3/00
Interface for lower limbs	A61H 2201/164
Therapy devices for lower limbs	A61H 2205/10

A61H 1/024

{Knee (A61H 1/0255 takes precedence)}

Informative references

Attention is drawn to the following places, which may be of interest for search:

Interface for lower limbs	A61H 2201/164
Therapy devices for knees	A61H 2205/104

A61H 1/0244

{Hip (A61H 1/0255 takes precedence)}

Informative references

Attention is drawn to the following places, which may be of interest for search:

Interface for the pelvis	A61H 2201/1628
Therapy devices for hip	A61H 2205/088

A61H 2001/0248

{by separating the legs laterally}

Informative references

Attention is drawn to the following places, which may be of interest for search:

Device suitable for active OR passive exercising	A63B 21/00178
Assisted exercising	A63B 21/00181
for active exercising	A63B 23/0488

A61H 2001/0251

{by moving the legs together laterally}

Informative references

Attention is drawn to the following places, which may be of interest for search:

Position of the patient	A61H 2203/04

A61H 1/0255

{Both knee and hip of a patient, e.g. in supine or sitting position, the feet being moved in a plane substantially parallel to the body-symmetrical-plane (A61H 1/0214 takes precedence)}

References relevant to classification in this group

This subgroup does not cover:

standing-up or sitting down aids	A61G 5/14
rotating cycling movement	A61H 1/0214

Informative references

Attention is drawn to the following places, which may be of interest for search:

Position of the patient	A61H 2203/04
Device suitable for active OR passive exercising	A63B 21/00178
Assisted exercising	A63B 21/00181
for active exercising	A63B 23/0405

A61H 1/0259

{moved by translation}

Special rules of classification within this group

This therapy is typically performed in a supine position, therefore the position supine A61H 2203/0456 does not need to be classified, only different positions are classified.

A61H 1/0262

{Walking movement; Appliances for aiding disabled persons to walk (A61H 3/00 takes precedence)}

Definition statement

This subgroup covers:

Simulation of the walking movement, or part of it

References relevant to classification in this group

This subgroup does not cover:

Appliances aiding disabled persons to walk	A61H 3/00
Walking coordination of arms and legs	A61H 2001/0211

A61H 1/0266

{Foot}

Definition statement

This subgroup covers:
Also movement of ankle

Informative references

Attention is drawn to the following places, which may be of interest for search:

Interface for the foot	A61H 2201/164
Therapy devices for the foot	A61H 2205/125
for active exercising	A63B 23/10

A61H 2001/027

{Toes}

Informative references

Attention is drawn to the following places, which may be of interest for search:

for active exercising	A63B 23/10

A61H 1/0274

{for the upper limbs}

Informative references

Attention is drawn to the following places, which may be of interest for search:

Interface for the upper limbs	A61H 2201/1635
Therapy devices for the upper limbs	A61H 2205/06
for active exercising	A63B 23/12

A61H 1/0277

{Elbow}

Informative references

Attention is drawn to the following places, which may be of interest for search:

for active exercising	A63B 23/1281

A61H 1/0281

{Shoulder}

Informative references

Attention is drawn to the following places, which may be of interest for search:

Interface for shoulders	A61H 2201/1614
Therapy devices for the shoulders	A61H 2205/062
for active exercising	A63B 23/12

A61H 1/0285

{Hand}

Informative references

Attention is drawn to the following places, which may be of interest for search:

Interface for the hands	A61H 2201/1635
Therapy devices for the hand	A61H 2205/065
for active exercising	A63B 23/16

A61H 1/0288

{Fingers}

Informative references

Attention is drawn to the following places, which may be of interest for search:

Interface for the hands	A61H 2201/1635
Therapy devices for the fingers	A61H 2205/067
for active exercising	A63B 23/16

A61H 1/0292

{for the spinal column (A61H 1/0218 takes precedence)}

Informative references

Attention is drawn to the following places, which may be of interest for search:

Interface for the back	A61H 2201/1623
Therapy devices for the back	A61H 2205/081
for active exercising	A63B 23/0238

A61H 1/0296

{Neck}

Informative references

Attention is drawn to the following places, which may be of interest for search:

Interface for the neck	A61H 2201/1609
Therapy devices for the neck	A61H 2205/04
for active exercising	A63B 23/025

A61H 3/00

Appliances for aiding patients or disabled persons to walk about (apparatus for helping babies to walk A47D 13/04; {orthopaedic devices for correcting deformities of, or supporting, limbs A61F 5/0102}; exercising apparatus for the feet or toes A63B 23/10; {stairways or ramps E04F 11/00})

Definition statement

This group covers:

Crutches, walkers, suspension devices or exoskeletons specifically made for aiding a disabled person to walk around, not on a treadmill.

References relevant to classification in this group

This group does not cover:

Simulation of the walking movement, or part of it, of the legs	A61H 1/0262
Walking coordination of arms and legs	A61H 2001/0211
Active exercise on a treadmill	A63B 22/02
Exoskeletons for increasing strength (not specifically for supporting disabled persons)	B25J 9/0006
Control system for manipulators, e.g. exoskeletons	B25J 9/16

Informative references

Attention is drawn to the following places, which may be of interest for search:

Walking sticks and Nordic walking sticks	A45B 1/00 - A45B 7/00
Apparatus for helping babies to walk	A47D 13/04
Orthopaedic devices for correcting deformities of, or supporting limbs	A61F 5/0102
Standing-up or sitting-down aids	A61G 5/14
Control means	A61H 2201/50
Applying electrical currents by contact electrodes for stimulating motor muscles, e.g. walking assistance	A61N 1/36003
Active exercise apparatus for the feet	A63B 23/04
Exercising apparatus for the feet or toes	A63B 23/10
Training for running, jogging or speed walking	A63B 69/0028

Vehicles with legs	**B62D57/03**
Stairways or ramps	E04F 11/00

Special rules of classification within this group

Exoskeletons specifically made for aiding disabled persons to walk are classified here in A61H 3/00. If the exoskeleton is bending a joint (i.e. not only for supporting the weight), the joint which is moved has to be classified in A61H 1/0237, the exoskeletons are normally portable A61H 2201/0157 and wearable A61H 2201/165, whereby wearable takes precedence over portable and therefore portable does not have to be coded.

Use orthogonal classification for additional information as well as for invention information A61H 2003/001 - A61H 2003/007).

For further additional information the orthogonal classification (A61H 2201/00, A61H 2230/85) is used.

A61H 2003/001

{on steps or stairways}

Informative references

Attention is drawn to the following places, which may be of interest for search:

Lift associated with stairs	B66B 9/08
Built-in aids for ascending or descending stairs	E04F 11/1863

A61H 2003/002

{with attached or incorporated article carrying means}

Informative references

Attention is drawn to the following places, which may be of interest for search:

For walking sticks	A45B 1/00
Sticks or Umbrellas with coat-hangers	A45B 3/06
Holders or carriers for hand articles	A45F 5/00

A61H 2003/003

{Umbrellas}

Informative references

Attention is drawn to the following places, which may be of interest for search:

Umbrellas	A45B 11/00
Holder for umbrellas	B60R 7/12

A61H 2003/004

{Trays}

Informative references

Attention is drawn to the following places, which may be of interest for search:

Sticks or umbrellas with containers for storing objects	A45B 2200/1054
Sticks or umbrellas with tables	A45B 2200/1063

A61H 2003/005

{with knee, leg or stump rests}

Informative references

Attention is drawn to the following places, which may be of interest for search:

Walking sticks or umbrellas convertible into seats	A45B 5/00
Interface for lower limbs	A61H 2201/164

A61H 2003/006

{with forearm rests, i.e. for non-used arms}

Informative references

Attention is drawn to the following places, which may be of interest for search:

Interface for arms	A61H 2201/1635

A61H 2003/007

{secured to the patient, e.g. with belts}

Informative references

Attention is drawn to the following places, which may be of interest for search:

Physical interface with patient	A61H 2201/16
Wearable	A61H 2201/165

A61H 3/008

{Using suspension devices for supporting the body in an upright walking or standing position, e.g. harnesses (drawing-out devices A61H 1/0218)}

Definition statement

This subgroup covers:

Devices suspending a disabled person walking or standing

References relevant to classification in this group

This subgroup does not cover:

For small children	A47D 13/04

Informative references

Attention is drawn to the following places, which may be of interest for search:

Thorax holding means	A61H 2201/1621
Body harness	A62B 5/00

A61H 3/02

Crutches

Informative references

Attention is drawn to the following places, which may be of interest for search:

Walking sticks	A45B 1/00
Telescoping connections	F16B 7/10

A61H 2003/0205

{Crutches with no pivoting movement during use, e.g. tripods}

Definition statement

This subgroup covers:

A61H 2003/0211

{with curved ground-engaging means, i.e. rockers}

Definition statement

This subgroup covers:

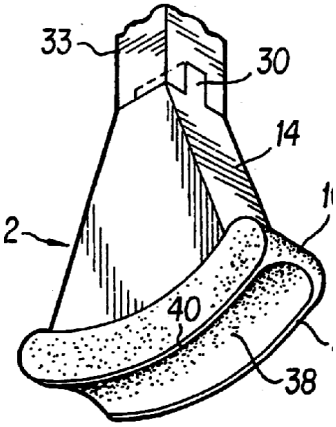

A61H 2003/0216

{Crutches in which movement is limited to a pivoting in one plane, e.g. 2-point supports}

Definition statement

This subgroup covers:

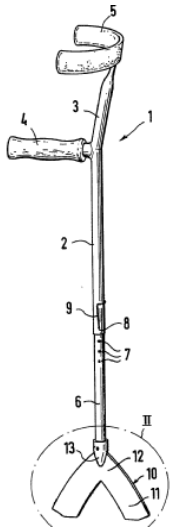

A61H 2003/0222

{with means for grasping or picking-up objects}

Informative references

Attention is drawn to the following places, which may be of interest for search:

Collecting crops spread on the soil	A01D 51/00
Devices for picking-up balls	A63B 47/00

A61H 2003/0227

{convertible from armpit- into forearm-model}

Informative references

Attention is drawn to the following places, which may be of interest for search:

Interface for the upper limbs	A61H 2201/1635

A61H 2003/0233

{convertible from armpit crutch into cane}

Definition statement

This subgroup covers:

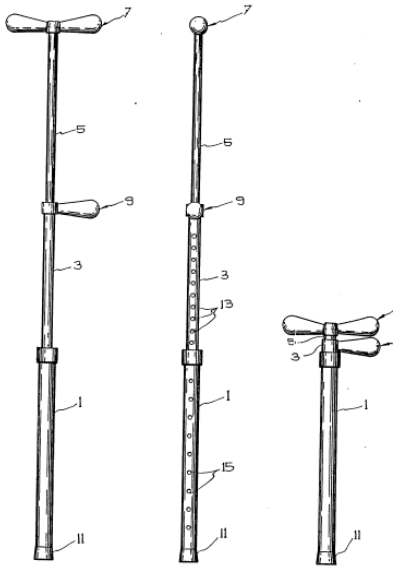

EP0236708

A61H 2003/0238

{convertible from forearm crutch into cane}

Definition statement

This subgroup covers:

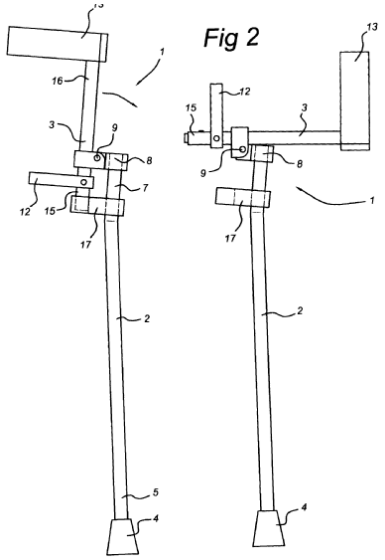

NL2000270C

A61H 3/0244

{Arrangements for storing or keeping upright when not in use}

Informative references

Attention is drawn to the following places, which may be of interest for search:

Walking sticks with hanging means	A45B 1/04
Cane or umbrella stands or holders	A47G 25/12

A61H 2003/025

{with devices for securing a pair of crutches together}

Informative references

Attention is drawn to the following places, which may be of interest for search:

Devices for binding skis in pairs	A63C 11/021

A61H 2003/0255

{on a single crutch for being fixed on or supported by a wall, furniture or the like}

Informative references

Attention is drawn to the following places, which may be of interest for search:

Devices for fastening to tables, walls or the like	A47G 29/087

A61H 2003/0261

{on walls or furniture for receiving single crutches}

Informative references

Attention is drawn to the following places, which may be of interest for search:

Devices for fastening to tables, walls or the like	A47G 29/087

A61H 2003/0266

{with magnetic fixing}

Informative references

Attention is drawn to the following places, which may be of interest for search:

Devices for binding skis in pairs with magnets	A63C 11/022

A61H 2003/0272

{on a single crutch allowing it to remain upright when not in use, e.g. retractable tripods (A61H 2003/0205 takes precedence)}

Definition statement

This subgroup covers:

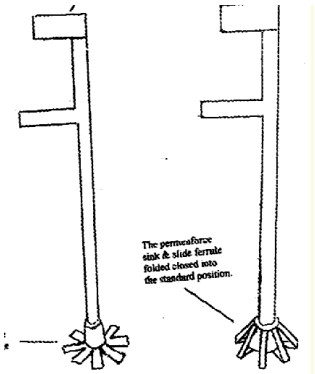

GB2470738

A61H 3/0277

{Shock absorbers therefor}

Informative references

Attention is drawn to the following places, which may be of interest for search:

shock absorbers for active exercising	A63B 2071/0063

A61H 2003/0283

{using elastomeric material}

Definition statement

This subgroup covers:

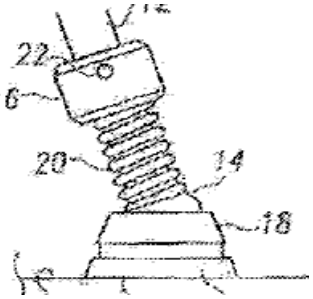

WO2009006488

A61H 3/0288

{Ferrules or tips therefor (for walking sticks or umbrellas A45B 9/04)}

Informative references

Attention is drawn to the following places, which may be of interest for search:

Ferrules or tips for walking sticks	A45B 9/04

A61H 2003/0294

{comprising a ball-and-socket joint}

Definition statement

This subgroup covers:

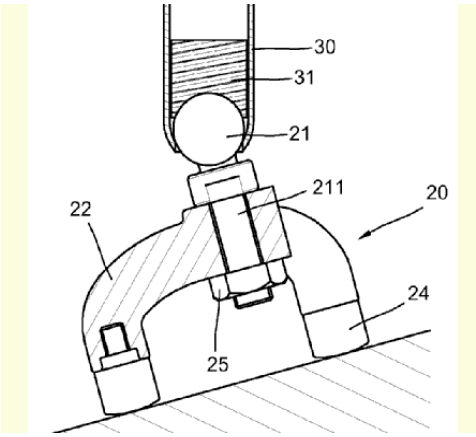

US2011094552

A61H 3/04

Wheeled walking aids for disabled persons {(A61H 3/06 takes precedence)}

Definition statement

This subgroup covers:

References relevant to classification in this group

This subgroup does not cover:

Wheelchairs	A61G 5/00
Walking aid using suspension devices for supporting	A61H 3/008
Walking aids for blind persons	A61H 3/06

Informative references

Attention is drawn to the following places, which may be of interest for search:

Hand carts	B62B 1/00

A61H 2003/043

{with a drive mechanism}

Definition statement

This subgroup covers:

also driven by human, by means of a driving mechanism, not by pushing it through handles

Informative references

Attention is drawn to the following places, which may be of interest for search:

Driving means for hand carts	B62B 5/0026

A61H 2003/046

{with braking means}

Informative references

Attention is drawn to the following places, which may be of interest for search:

Braking means for hand carts	B62B 5/04

A61H 3/06

Walking {or guiding} aids for blind persons (walking sticks {in general} A45B; replacing direct visual perception by another kind of perception A61F 9/08)

Informative references

Attention is drawn to the following places, which may be of interest for search:

Walking sticks	A45B 1/00
Replacing direct visual perception by another kind of perception	A61F 9/08

A61H 3/061

{with electronic detecting or guiding means}

Informative references

Attention is drawn to the following places, which may be of interest for search:

Replacing direct visual perception by another kind of perception	A61F 9/08
Systems using wave reflection for anti-collision	G01S 17/93
Teaching or communicating with blinds	G09B 21/001

A61H 2003/063

{with tactile perception}

Informative references

Attention is drawn to the following places, which may be of interest for search:

Device or method change consciousness by the tactile sense	**A61M21/00A4**
Means for aiding people with impaired vision by tactile feedback	A61M 2205/582
Communicating with blinds using tactile presentation of information	G09B 21/003

A61H 2003/065

{in the form of braille}

Informative references

Attention is drawn to the following places, which may be of interest for search:

Typewriters or selective printing for printing in Braille	B41J 3/00
Printing processes for printing Braille	B41M 3/16

A61H 3/066

{Installations on the floor, e.g. special surfaces, to guide blind persons}

Informative references

Attention is drawn to the following places, which may be of interest for search:

Construction of surfaces for roads, sport grounds or the like	E01C 1/00
Road signs or traffic signals	E01F 9/50

A61H 3/068

{Sticks for blind persons}

Informative references

Attention is drawn to the following places, which may be of interest for search:

For walking sticks	A45B 1/00
Communicating with blind persons by means of audio signals	G09B 21/006
Systems using wave reflection for anti-collision	G01S 17/93

A61H 5/00

Exercisers for the eyes

Definition statement

This group covers:

Apparatus or processes, which are not used for surgical purposes that are specially adapted to improve or promote the optical functioning of individuals (e.g. rectify defective vision, improve the natural operation of their eyes)

Informative references

Attention is drawn to the following places, which may be of interest for search:

Apparatus for testing the eyes	A61B 3/00
Apparatus for determining the visual field	A61B 3/024

Special rules of classification within this group

For further additional information the orthogonal classification (A61H 2201/00, A61H 2230/85) is used.

A61H 5/005

{Exercisers for training the stereoscopic view}

References relevant to classification in this group

This subgroup does not cover:

Stereoscopic television system	H04N 13/00

A61H 7/00

Devices for suction-kneading massage; Devices for massaging the skin by rubbing or brushing not otherwise provided for (Electro-medical massage devices applying electric current by contact A61N 1/18 {Brushes in general A46; Bathing sponges, brushes, gloves or similar cleaning or rubbing implements not specially for massage A47K 7/02; Suction devices for nursing A61M 1/06, A61M 1/08; Rollers or balls therefore, A61H 15/00})

Definition statement

This group covers:

Apparatus or processes which are not used for surgical purposes utilizing mechanical energy directly applied upon human bodies by physical contact (e.g. massage) to rub, or knead, a portion of the external surface of human bodies, or the surfaces of their naturally occurring body cavities

Informative references

Attention is drawn to the following places, which may be of interest for search:

Footwear with protrusions for acupressure	A43B 3/108, A43B 3/128
Brushes in general	A46B
Bathing sponges, brushes, gloves or similar cleaning or rubbing implements not specially for massage	A47K 7/02
Layer between the skin and massage elements	A61H 2201/1654
Suction device for nursing	A61M 1/06, A61M 1/08

Special rules of classification within this group

Rollers and balls therefore are classified in **A61B15/00**.

For additional information the orthogonal classification (A61H 2201/00, A61H 2230/85) is used.

A61H 7/001

{without substantial movement between the skin and the device}

References relevant to classification in this group

This subgroup does not cover:

Pressing acupuncture points	A61H 39/04

A61H 7/002

{by rubbing or brushing}

Informative references

Attention is drawn to the following places, which may be of interest for search:

Brushes in general	A46B 1/00

A61H 7/003

{Hand-held or hand-driven devices}

References relevant to classification in this group

This subgroup does not cover:

Brushes	A46B 13/08

Informative references

Attention is drawn to the following places, which may be of interest for search:

Driven by a human being	A61H 2201/1253

A61H 7/004

{power-driven, e.g. electrical}

Definition statement

This subgroup covers:
Massage means is power-driven, whole device or only interface

References relevant to classification in this group

This subgroup does not cover:

Power-driven brushes	A46B 13/02
Power-driven toothbrushes	A61C 17/16

Informative references

Attention is drawn to the following places, which may be of interest for search:

Vibrating driving means	A61H 23/00
Artificial respiration or heart stimulation power-driven	A61H 31/006
with electric or magnetic drive	A61H 2201/1207
with hydraulic or pneumaic drive	A61H 2201/1238

A61H 7/005

{hand-held}

Informative references

Attention is drawn to the following places, which may be of interest for search:

Hand-held nozzles	A61H 33/6036
Handheld	A61H 2201/0153

A61H 7/006

{Helmets for head-massage (baths for the head A61H 35/008; washing, rinsing, drying A45D)}

References relevant to classification in this group

This subgroup does not cover:

Washing, rinsing, drying	A45D 1/00
Baths for the head	A61H 35/008
Hair care preparations for care of hair	A61Q 5/00

A61H 7/007

{Kneading}

Definition statement

This subgroup covers:

Kneading is a circular technique by which the skin and its underlying structure are moved in a circular rotating motion on the underlying structures (e.g. of muscles, tendons, ligaments, bones). Tissue is lifted and rolled away from the bone, and then back towards the bone with a squeezing compressive action

A61H 7/008

{Suction kneading}

Definition statement

This subgroup covers:

Kneading massage in which the lifting of the tissue is obtained by vacuum

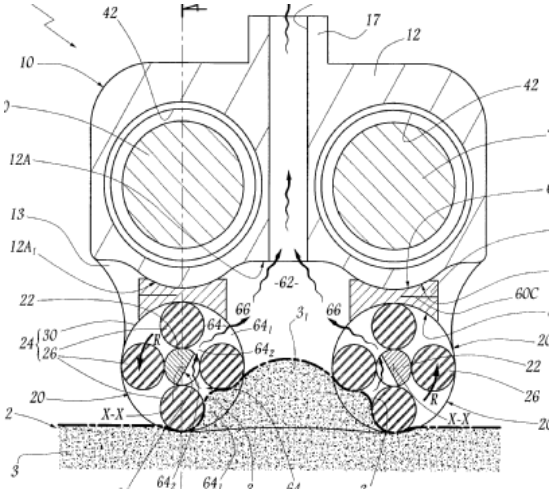

WO2007147964

A61H 2007/009

{having massage elements rotating on parallel output axis}

Definition statement

This subgroup covers:

Kneading massage in which the lifting of the tissue is obtained by rotation of elements mounted on parallel axis . The axis can be parallel or perpendicular to the skin.

Parallel

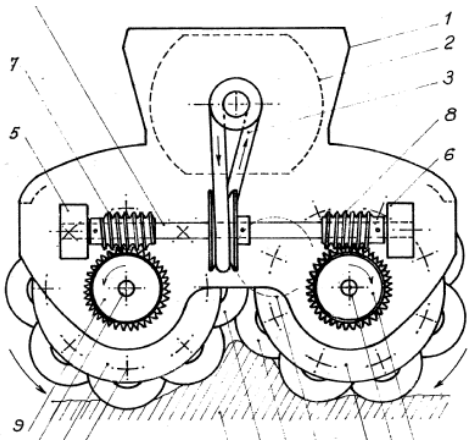

FR2347035

Perpendicular

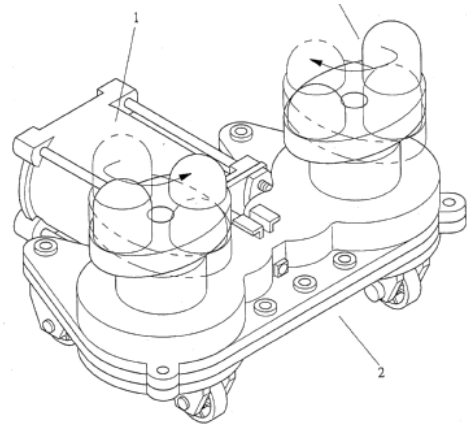

FR2854566

A61H 9/00

Pneumatic or hydraulic massage, {e.g. sprays (A61H 13/00 takes precedence; underwater massage, spraying systems acting on a body or body part immersed in water A61H 33/00, A61H 35/00; brushes with fluid supply A46B 11/00; nozzles per se B05B)}

Definition statement

This group covers:

Pneumatic or hydraulic massage means acting either directly on the skin or on a layer positioned between the skin and the massage means

References relevant to classification in this group

This group does not cover:

Gum massage	A61H 13/00
Hydraulic or pneumatic drive	A61H 2201/1238
Hydraulic or pneumatic transmission means	A61H 2201/1409

Informative references

Attention is drawn to the following places, which may be of interest for search:

Brushes with fluid supply	A46B 11/00
Underwater massage, spraying system acting on a body or body part immersed in water	A61H 33/00, A61H 35/00
Layer between the skin and massage elements	A61H 2201/1654
Nozzles per se	B05B

Special rules of classification within this group

For additional information the orthogonal classification (A61H 2201/00, A61H 2230/85) is used.

A61H 9/0007

{Pulsating (percussion massage A61H 23/006; nozzles for pulsating streams in bathing devices A61H 33/6057)}

Informative references

Attention is drawn to the following places, which may be of interest for search:

Percussion massage	A61H 23/006
Nozzles for pulsating streams in bathing devices	A61H 33/6057

A61H 2009/0014

{with particles, e.g. sand}

Definition statement

This subgroup covers:
Fluids loaded with particles

A61H 9/0021

{Hand-held devices for spraying and removing liquid while moved on the skin}

Definition statement

This subgroup covers:
Liquid jets for localized massage on a body not immersed in water.

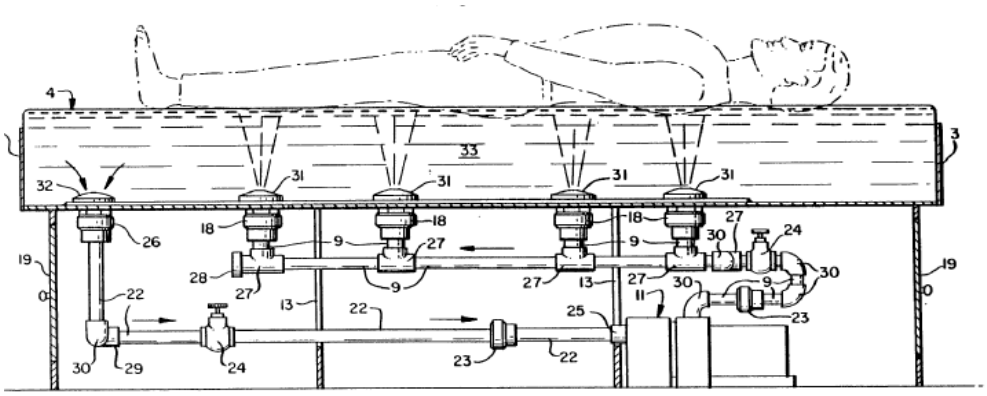

WO8804918

Informative references

Attention is drawn to the following places, which may be of interest for search:

Massaging with hydrostatic pressure	A61H 2023/045
Having a layer between the skin and the fluid	A61H 2201/1654
Surface of interface being disposable	A61H 2201/1688
Heated or cooled	A61H 2201/02
Control means	A61H 2201/50
Specific part of the body to be treated	A61H 2205/00

A61H 9/0028

{Hydraulic massage}

References relevant to classification in this group

This subgroup does not cover:

medical suction-irrigation	**A61M1/00K**, **A61M1/00T2**
dental suction-irrigation	A61C 17/0208

A61H 2009/0035

{with cabin for the whole body}

Definition statement

This subgroup covers:

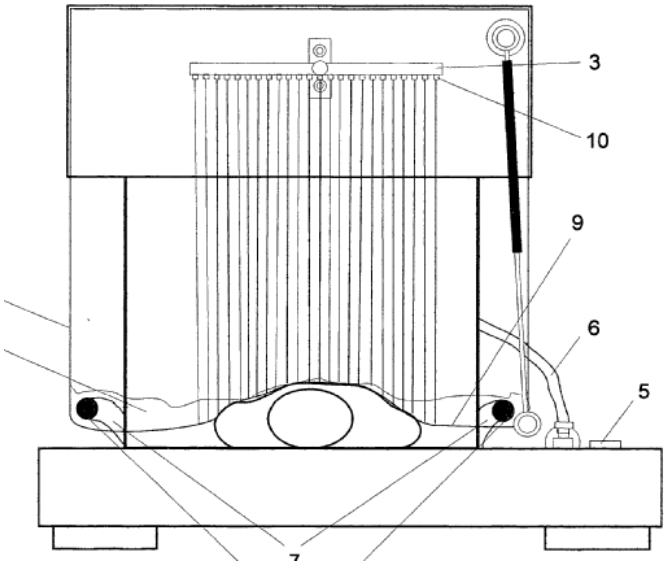

DE202008009644U

A61H 2009/0042

{with water recirculation}

References relevant to classification in this group

This subgroup does not cover:

Hand-held devices for spraying and removing liquid while moved on the skin	A61H 9/0028

A61H 9/005

{Pneumatic massage}

References relevant to classification in this group

This subgroup does not cover:

Iron lungs	A61H 31/02
Cupping glasses e.g. for removing venom by suction	A61M 1/08

A61H 9/0057

{Suction (suction kneading A61H 7/008)}

References relevant to classification in this subclass/group

This subgroup does not cover:

suction kneading massage	A61H 7/008

A61H 2009/0064

{suction by releasing a flexible cup after deformation, i.e. without further vacuum source}

Informative references

Attention is drawn to the following places, which may be of interest for search:

Portable	A61H 2201/0157

A61H 9/0071

{by localized pressure, e.g. air streams or jets}

Definition statement

This subgroup covers:

Air streams or jets for localized massages

References relevant to classification in this group

This subgroup does not cover:

Using fluids loaded with particles	A61H 2009/0014

A61H 9/0078

{With intermittent or alternately inflated bladders or cuffs (beds with inflatable chambers A61G 7/05769)}

References relevant to classification in this group

This subgroup does not cover:

mattresses for preventing bed-sores with alternated pressurised chambers	A61G 7/05776

Informative references

Attention is drawn to the following places, which may be of interest for search:

Heated or cooled	A61H 2201/02
Control means	A61H 2201/50
Specific part of the body to be treated	A61H 2205/00
Controlled by heartbeat rate	A61H 2230/065

A61H 9/0085

{Inflated by user's body movement, e.g. ambulatory devices}

Informative references

Attention is drawn to the following places, which may be of interest for search:

Driven by human being	A61H 2201/1253

A61H 9/0092

{Cuffs therefor}

Informative references

Attention is drawn to the following places, which may be of interest for search:

Shoes with internal pneumatic chambers	A43B 13/20, A43B 17/03
Having a layer between the skin and the fluid	A61H 2201/1654
Surface of interface being disposable	A61H 2201/1688

A61H 11/00

Belts, strips or combs for massage purposes

Definition statement

This group covers:

Apparatus or processes which are not used for surgical purposes utilizing mechanical energy directly applied upon human bodies by physical contact (e.g. massage) through belts or strips to massage a portion of the external surface of human bodies, or the surfaces of their naturally occurring body cavities

Special rules of classification within this group

For additional information the orthogonal classification (A61H 2201/00, A61H 2230/85) is used.

A61H 2011/005

{with belt or strap expanding and contracting around an encircled body part}

Informative references

Attention is drawn to the following places, which may be of interest for search:

Artificial respiration or heart stimulation (CPR)	A61H 31/00

A61H 11/02

Massage devices with strips oscillating lengthwise

Definition statement

This subgroup covers:

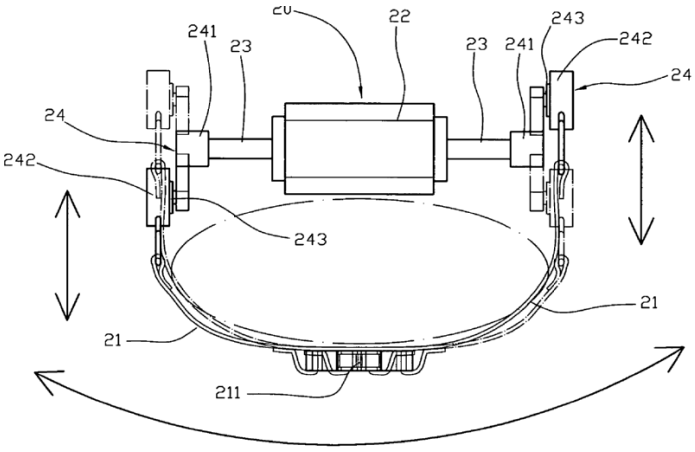

A61H 13/00

Gum massage

Special rules of classification within this group

For additional information the orthogonal classification (A61H 2201/00, A61H 2230/85) is used.

A61H 13/005

{Hydraulic gum massage (instruments or machines for rinsing the teeth A61C 17/02)}

Informative references

Attention is drawn to the following places, which may be of interest for search:

Instruments or machines for rinsing the teeth	A61C 17/02

A61H 15/00

Massage by means of rollers, balls, e.g. inflatable, chains, or roller chains

Definition statement

This group covers:

The massage means acting either directly on the skin or on a layer positioned between the skin and the massage means

Roller chains are connected flexible series of links fastening a series of rollers for massaging purposes.

CN200973812Y

Informative references

Attention is drawn to the following places, which may be of interest for search:

Portable	A61H 2201/0157
Power driven	A61H 15/0078
Specific driving means	A61H 2201/12
Handheld, driven by human being	A61H 15/0092
Layer between the skin and massage elements	A61H 2201/1654
Specific part of the body to be treated	A61H 2205/00

Special rules of classification within this group

Types of rollers should be classified in the orthogonal classification A61H 2015/0071.

For additional information the orthogonal classification (A61H 2201/00, A61H 2230/85) is used.

A61H 2015/0007

{with balls or rollers rotating about their own axis}

Definition statement

This subgroup covers:

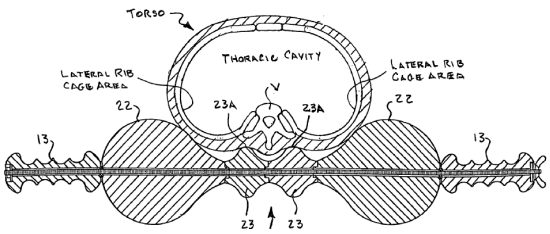

US6974427

A61H 2015/0014

{cylinder-like, i.e. rollers}

Definition statement

This subgroup covers:

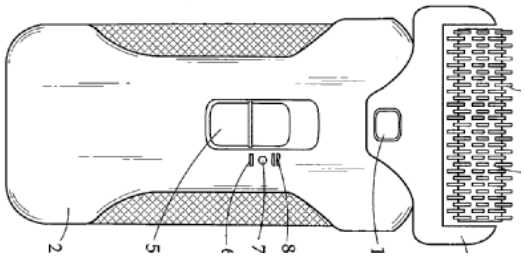

US2011230804

A61H 2015/0021

{multiple on the same axis}

Definition statement

This subgroup covers:

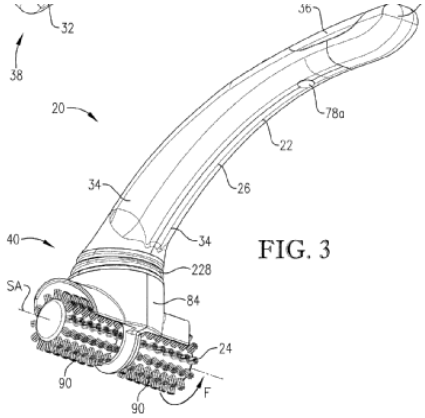

FIG. 3

US2011087141

A61H 2015/0028

{disc-like, i.e. diameter substantially greater than width}

Definition statement

This subgroup covers:

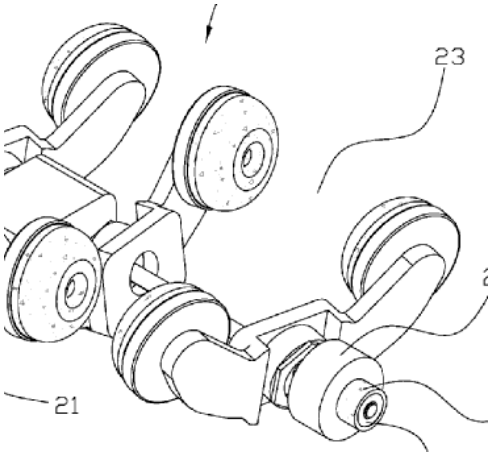

US2011082400

A61H 2015/0035

{multiple on the same axis}

Definition statement

This subgroup covers:

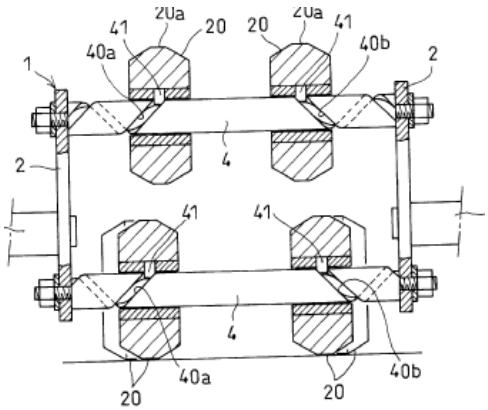

WO2011027426

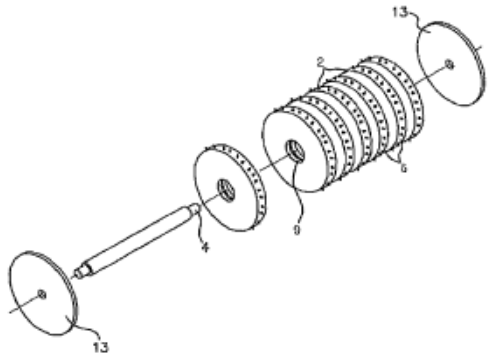

EP2347789

A61H 2015/0042

{Balls or spheres}

Definition statement

This subgroup covers:

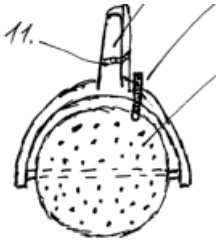

DE202008005686U

A61H 2015/005

{multiple on the same axis}

Definition statement

This subgroup covers:

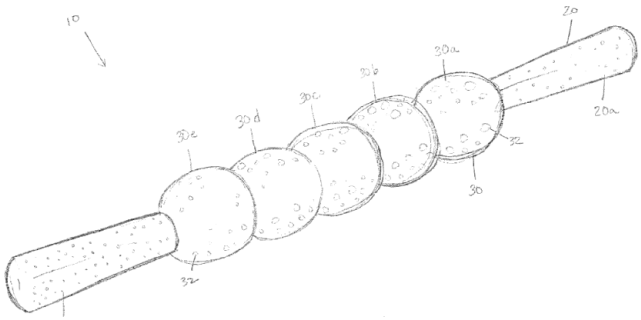

US2011313333

A61H 2015/0057

{the axis being resiliently biased}

Definition statement

This subgroup covers:

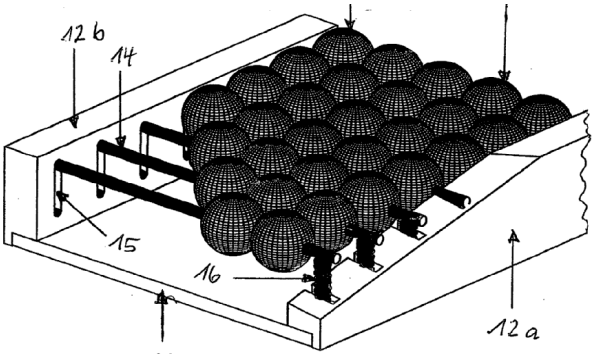

DE202006006704U

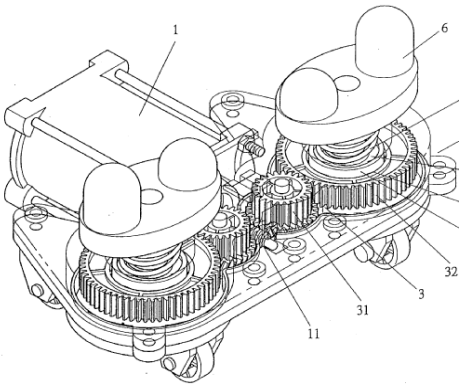

FR2854566

A61H 2015/0064

{with freely rotating spheres}

Definition statement

This subgroup covers:
Freely rotating spheres like a ball-pen or roll-on on deodorants

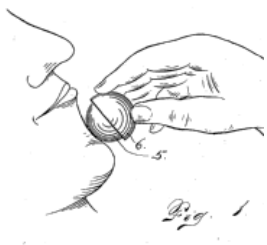

US754925

A61H 2015/0071

{with balls or rollers having built-in vibrating means}

Informative references

Attention is drawn to the following places, which may be of interest for search:

Vibrating means	A61H 23/00

A61H 15/0078

{power-driven}

Definition statement

This subgroup covers:
Massage means is power-driven, whole device or only interface

Informative references

Attention is drawn to the following places, which may be of interest for search:

Vibration driving means	A61H 23/00

Driving means	A61H 2201/12

A61H 15/0085

{hand-held}

Informative references

Attention is drawn to the following places, which may be of interest for search:

Hand-held nozzles	A61H 33/6036
Hand-held for other kind of devices in A61H	A61H 2201/0153

A61H 15/0092

{hand-held (A61H 15/0085 takes precedence)}

Informative references

Attention is drawn to the following places, which may be of interest for search:

Hand-held nozzles	A61H 33/6036
Hand-held for other kind of devices in A61H	A61H 2201/0153

A61H 15/02

adapted for simultaneous treatment with light, heat or drugs

Informative references

Attention is drawn to the following places, which may be of interest for search:

Appliances specially adapted for applying liquid, e.g. using roller or ball	A45D 34/04
Heating cooling appliances for medical or therapeutic use	A61F 7/00
Heated or cooled	A61H 2201/02
Further special therapeutic means	A61H 2201/10
Aromatherapy	A61M 2021/0016
Electrotherapy	A61N 1/00
Magnetotherapy	A61N 2/00
Radiation therapy	A61N 5/00
Chromotherapy	A61N 2005/0663
Infra-red	A61N 2005/0659
Ultraviolet	A61N 2005/0661
Radiation by LEDs	A61N 2005/0651

A61H 19/00

Massage for the genitals; {Devices for improving sexual intercourse (penis erection devices A61F 5/41; vibration or percussion related aspects A61H 23/00)}

Definition statement

This group covers:

Massage devices used for increasing the experience during sexual intercourse

References relevant to classification in this group

This group does not cover:

Artificial penis erection devices	A61F 5/41

Informative references

Attention is drawn to the following places, which may be of interest for search:

Taking sperma sample	A61B 10/0058
Condoms	A61F 6/04
Vibration means	A61H 23/00
Incorporated in furniture	A61H 2201/0138
Portable	A61H 2201/0157
Heated or cooled	A61H 2201/02
Driving means	A61H 2201/12
Disposable	A61H 2201/1688
Control means	A61H 2201/50

Special rules of classification within this group

For additional information the orthogonal classification (A61H 2201/00, A61H 2230/85) is used.

A61H 19/30

{Devices for external stimulation of the genitals}

Informative references

Attention is drawn to the following places, which may be of interest for search:

Surface with enhanced rubbing effect	A61H 2201/1692

A61H 19/32

{for inserting the genitals therein, e.g. vibrating rings for males or breast stimulating devices}

Informative references

Attention is drawn to the following places, which may be of interest for search:

Wearable	A61H 2201/165

A61H 19/34

{For clitoral stimulation}

Informative references

Attention is drawn to the following places, which may be of interest for search:

Surface with enhanced rubbing effect	A61H 2201/1692

A61H 19/40

{Devices insertable in the genitals}

Informative references

Attention is drawn to the following places, which may be of interest for search:

Watertight	A61H 2201/0111

A61H 19/44

{Having substantially cylindrical shape, e.g. dildos}

Informative references

Attention is drawn to the following places, which may be of interest for search:

Interchangeable	A61H 2201/1685

A61H 19/50

{Devices for use during sexual intercourse}

Definition statement

This subgroup covers:

Massage devices used between more persons during sexual intercourse

Informative references

Attention is drawn to the following places, which may be of interest for search:

Seating furniture for sexual intercourse	A47C 15/008

A61H 21/00

Massage devices for cavities of the body {, e.g. nose, ears and anus (for the genitals A61H 19/00); Vibration or percussion related aspects A61H 23/00}

Definition statement

This group covers:

Massage devices for nose, ears and anus

References relevant to classification in this group

This group does not cover:

Massage of the genitals	A61H 19/00

Informative references

Attention is drawn to the following places, which may be of interest for search:

Vibration means	A61H 23/00

Special rules of classification within this group

For additional information the orthogonal classification (A61H 2201/00, A61H 2230/85) is used.

A61H 23/00

Percussion or vibration massage, e.g. using supersonic vibration; Suction-vibration massage; Massage with moving diaphragms {(apparatus for passive exercising A61H 1/00; generating or transmitting mechanical vibrations in general B06B)}

Definition statement

This group covers:

Apparatus or processes which are not used for surgical purposes utilizing mechanical energy directly applied upon human bodies by physical contact (e.g. massage) to tap or vibrate the external surface of human bodies, or the surfaces of their naturally occurring body cavities

References relevant to classification in this group

This group does not cover:

Ultrasound therapy	A61N 7/00

Informative references

Attention is drawn to the following places, which may be of interest for search:

Apparatus for passive exercising	A61H 1/00
Generating of transmitting mechanical vibrations in general	B06B

Special rules of classification within this group

For additional information the orthogonal classification (A61H 2201/00, A61H 2230/85) is used.

A61H 2023/002

{having a percussion element combined with a passive spacer element for bearing against the skin}

Definition statement

This subgroup covers:

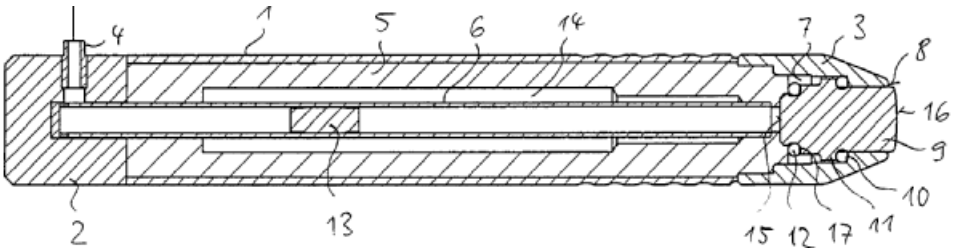

EP2095843

A61H 23/004

{With mechanical drive, e.g. spring mechanism or vibrating unit being hit for starting vibration and then applied to the body of a patient}

Definition statement

This subgroup covers:

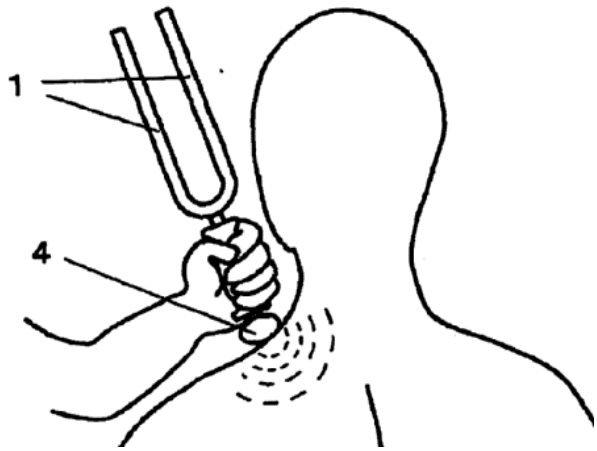

A61H 23/006

{Percussion or tapping massage (hand percussion A61H 23/06)}

Definition statement

This subgroup covers:

Alternated pressure on the skin, characterised by higher amplitude, higher force applied and lower frequency respect to a vibration massage. Normally it implies an intermittent contact between the skin and the massaging unit.

A61H 23/008

{using shock waves}

References relevant to classification in this group

This subgroup does not cover:

extra-corporal shock wave lithotripsy (ESWL)	A61B 17/225

A61H 23/02

with electric or magnetic drive

Informative references

Attention is drawn to the following places, which may be of interest for search:

electric or magnetic drive not for percussion or vibration	A61H 2201/1207

A61H 2023/0209

{powered with frequencies not related to mains frequency}

Informative references

Attention is drawn to the following places, which may be of interest for search:

Frequency controlled AC motor	A61H 2201/1223

A61H 23/0218

{with alternating magnetic fields producing a translating or oscillating movement}

Informative references

Attention is drawn to the following places, which may be of interest for search:

Magnetotherapy	A61N 2/00

A61H 2023/0227

{with magnetostrictive elements}

Definition statement

This subgroup covers:

Magnetostrictive elements can convert magnetic energy into kinetic energy, or the reverse.

References relevant to classification in this group

This subgroup does not cover:

Piezo-electric transducers	**A61H23/P**

A61H 23/0236

{using sonic waves, e.g. using loudspeakers}

References relevant to classification in this group

This subgroup does not cover:

powered with frequencies not related to mains frequency	A61H 2023/0209

A61H 23/0245

{with ultrasonic transducers, e.g. piezo-electric}

References relevant to classification in this group

This subgroup does not cover:

Magneto-strictive elements	A61H 2023/0227

A61H 23/0254

{with rotary motor}

Definition statement

This subgroup covers:

Rotating means linked by eccentrics, cams to an interface to set it in vibration

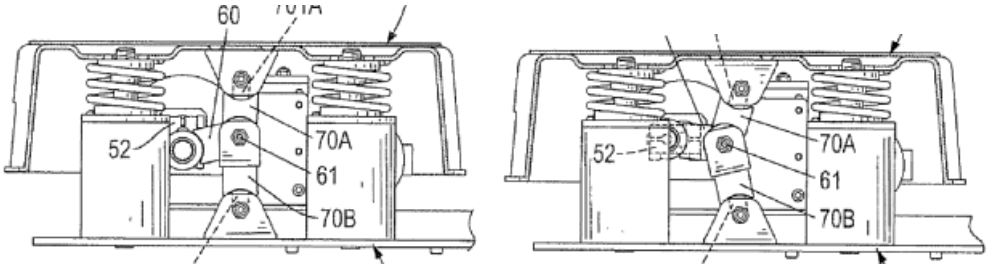

US2009139354

References relevant to classification in this group

This subgroup does not cover:

Rotating unbalanced masses	A61H 23/0263

Informative references

Attention is drawn to the following places, which may be of interest for search:

Electric or magnetic drive not for percussion or vibration	A61H 2201/1207

A61H 23/0263

{using rotating unbalanced masses}

Definition statement

This subgroup covers:

The unbalanced masses causing the driving unit and the parts connected to it to vibrate

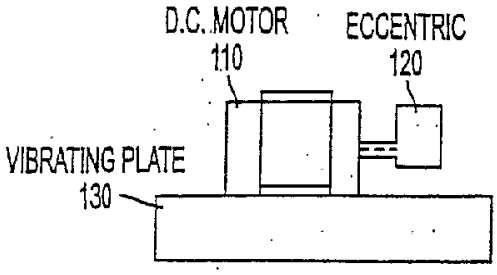

WO2004105868

References relevant to classification in this group

This subgroup does not cover:

Rotating means linked by eccentrics, cams to an interface to set it in vibration	A61H 23/0254

A61H 2023/0272

{multiple masses each rotated by an individual motor}

Definition statement

This subgroup covers:

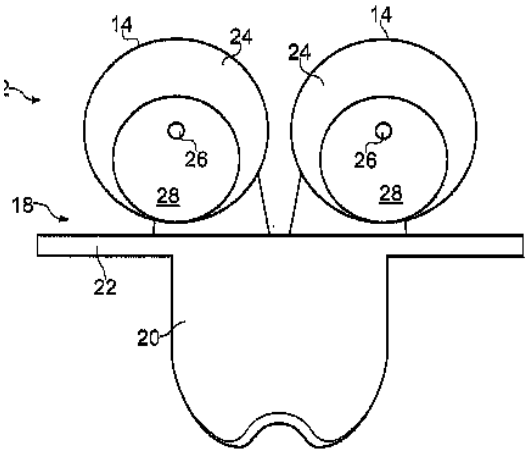

WO2007096594

A61H 2023/0281

{multiple masses driven by the same motor}

Definition statement

This subgroup covers:

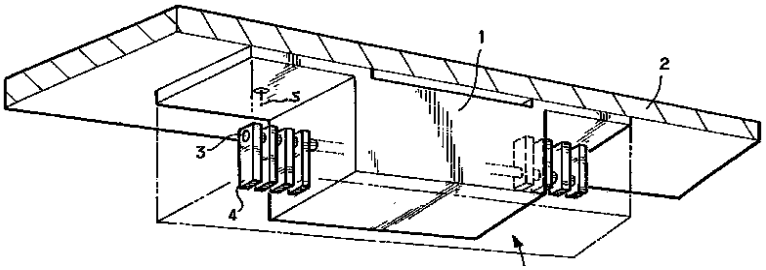

FR2655539

A61H 2023/029

{with variable angular positioning}

Definition statement

This subgroup covers:

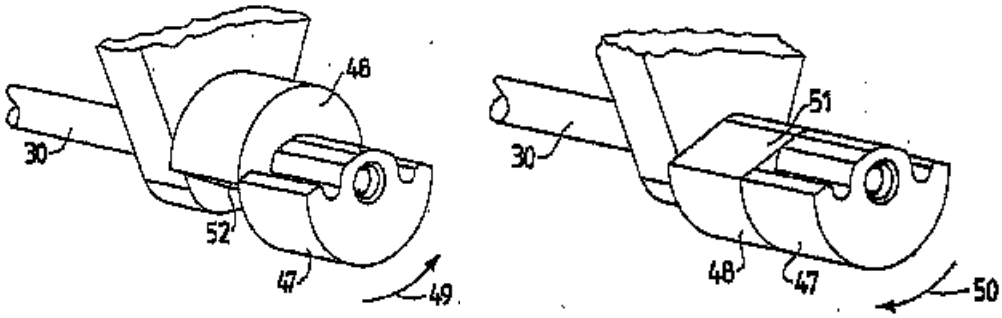

WO03096860

A61H 23/04

with hydraulic or pneumatic drive {(Hydraulic or Pneumatic massages, A61H 9/00; Underwater massages, A61H 33/00)}

Informative references

Attention is drawn to the following places, which may be of interest for search:

hydraulic or pneumatic drive not for percussion or vibration	A61H 2201/1238

A61H 2023/045

{using hydrostatic pressure, e.g. high density fluids}

Definition statement

This subgroup covers:

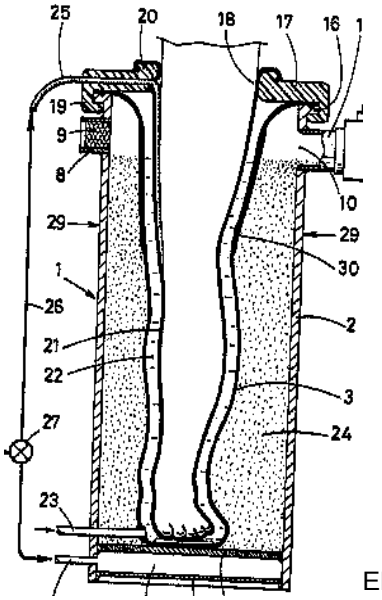

EP0181814

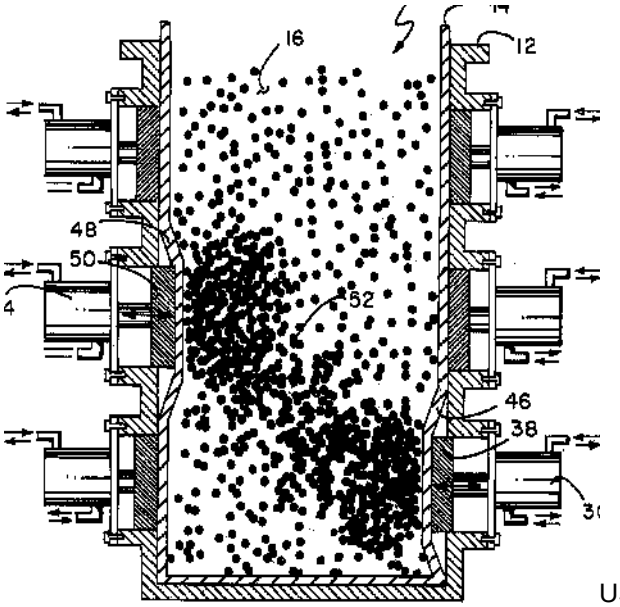

US6179797

A61H 23/06

Hand percussion {, i.e. Hand driven (Chiropractic devices, A61H 1/008, A61H 1/006)}

References relevant to classification in this group

This subgroup does not cover:

Chiropractic devices	A61H 1/008, A61H 1/006

A61H 31/00

Artificial respiration or heart stimulation ({blood pumps A61M 1/10;} artificial respiration by treatment with gas or air, e.g. mouth-to-mouth respiration A61M 16/00; applying electric currents by contact electrodes for stimulation, e.g. heart pace-makers A61N 1/36 {; teaching or training models, demonstration models for medical purposes G09B 23/288})

Definition statement

This group covers:

Apparatus or processes which are not used for surgical purposes utilizing mechanical energy transmitted by direct physical contact with the external surface of the thorax portion of human bodies to stimulate the heart in case of emergency or induce/supplement normal breathing (e.g. iron lungs)

References relevant to classification in this group

This group does not cover:

Blood pumps	A61M 1/10
Mouth-to-mouth respiration	A61M 16/00
Heart pace-makers	A61N 1/36
Rhythm indicators	G09B 23/288

Special rules of classification within this group

For additional information the orthogonal classification (A61H 2201/00, A61H 2230/85) is used.

A61H 2031/001

{fixed on the chest by suction}

Informative references

Attention is drawn to the following places, which may be of interest for search:

Suction cups used for fixing in active exercising devices	A63B 2225/055

A61H 2031/002

{fixed on the chest by adhesives}

Informative references

Attention is drawn to the following places, which may be of interest for search:

Adhesive type surfaces in active exercising devices	A63B 2209/10

A61H 2031/003

{with alternated thorax decompression due to lateral compression}

Definition statement

This subgroup covers:

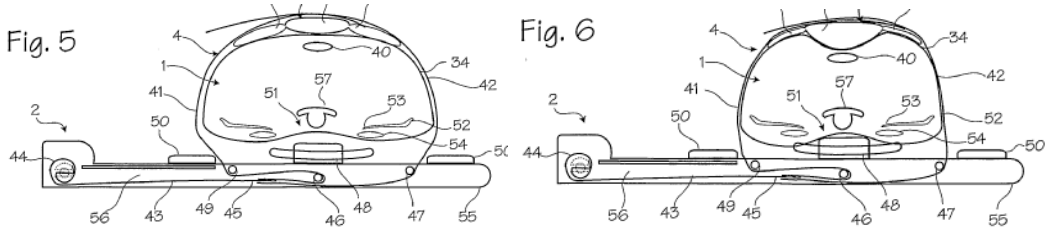

WO2004004548

A61H 31/004

{Heart stimulation}

Definition statement

This subgroup covers:

Only for exterior mechanical heart stimulation

Informative references

Attention is drawn to the following places, which may be of interest for search:

Belt or strap expanding and contracting around an encircled body part	A61H 2011/005

A61H 31/005

{with feedback for the user}

Informative references

Attention is drawn to the following places, which may be of interest for search:

Control means - Interfaces to the user	A61H 2201/5023
Artificial respiration with computer control	Y10S 601/08

A61H 31/006

{Power driven}

Informative references

Attention is drawn to the following places, which may be of interest for search:

with electric or magnetic drive	A61H 2201/1207
with hydraulic or pneumaic drive	A61H 2201/1238

A61H 31/007

{Manual driven}

Informative references

Attention is drawn to the following places, which may be of interest for search:

Driven by human being	A61H 2201/1253

A61H 31/008

{Supine patient supports or bases, e.g. improving air-way access to the lungs}

Informative references

Attention is drawn to the following places, which may be of interest for search:

Patient in supine position	A61H 2203/0456

A61H 31/02

"Iron-lungs", {i.e. involving chest expansion by applying underpressure thereon}, whether or not combined with gas breathing means

Informative references

Attention is drawn to the following places, which may be of interest for search:

Rooms for treatment of patients at over- or under-pressure or at a variable pressure	A61G 10/026
Influencing respiratory system by gas treatment	A61M 16/00
Active exercising at over- or under-pressure or at a variable pressure	A63B 2208/05

A61H 2031/025

{using the same pump for pressure and vacuum, not being driven at the respiratory rate, e.g. blowers}

References relevant to classification in this group

This subgroup does not cover:

Driven at the respiratory rate	A61H 2230/425

A61H 33/00

Bathing devices for special therapeutic or hygienic purposes (A61H 35/00 takes precedence; {sprays acting on a body or body part not immersed in water A61H 9/00; means for washing bed-ridden persons A61G 7/0005;} for sub aquatic intestinal cleaning A61M 9/00; {isolation chambers A61M 21/0094; } electric or magnetic baths, applying ionised fluids A61N 1/44 {; heater for bath tubs F24H 1/0081})

Definition statement

This group covers:

Apparatus or processes which are not used for surgical purposes (e.g. baths) that are specially adapted for covering, soaking, or immersing human bodies, or portions of bodies, within fluids (e.g. steam, water) or fluent materials (e.g. sand, mud) in a manner that is distinct from the common bathing process for cleaning human bodies

References relevant to classification in this group

This group does not cover:

Baths for specific parts of the body	A61H 35/00

Informative references

Attention is drawn to the following places, which may be of interest for search:

Bathing devices	A47K 3/02
Means for washing bed-ridden persons	A61G 7/0005
Sprays acting on a body or a body part not immersed in water	A61H 9/00
Means for sub-aquatic intestinal cleaning	A61M 9/00
Isolation tanks	A61M 21/0094
Devices for spraying media on the human body	A61M 35/00
Electric or magnetic baths, applying ionised fluids	A61N 1/44
Heater for bath tubs	F24H 1/0081

Special rules of classification within this group

For additional information the orthogonal classification (A61H 2201/00, A61H 2230/85) is used.

A61H 2033/0004

{Bathing devices specially adapted for treating burned patients}

Informative references

Attention is drawn to the following places, which may be of interest for search:

Means for washing bed-ridden persons	A61G 7/0005
Baths for specific parts of the body	A61H 35/00

A61H 2033/0008

{Arrangement for cleaning the installation before or after use (not used)}

Informative references

Attention is drawn to the following places, which may be of interest for search:

Machines for cleaning floors, furniture, walls, etc.	A47L 11/00
Implements for cleaning floors, furniture, walls, etc.	A47L 13/00

A61H 2033/0012

{by rinsing}

Definition statement

This subgroup covers:

Without soap or with clean water to remove soap, detergent, dirt, or impurities.

A61H 2033/0016

{using cleansing products}

Definition statement

This subgroup covers:

using specific products for thoroughly cleaning

A61H 2033/002

{by blowing air through the installation after the bath has been emptied}

Definition statement

This subgroup covers:

In order to reduce residual water and reduce the possibility that bacteria and other pathogens may become present in the system.

A61H 2033/0025

{by connecting the air lines with the drain}

Definition statement

This subgroup covers:

In order to reduce residual water and reduce the possibility that bacteria and other pathogens may become present in the system.

A61H 2033/0029

{with ultrasonics}

Informative references

Attention is drawn to the following places, which may be of interest for search:

Ultrasonic transducers for percussion or vibration massage	A61H 23/0245

A61H 2033/0033

{by draining-off pumps, nozzles, waterlines by gravity}

Definition statement

This subgroup covers:

In order to reduce residual water and reduce the possibility that bacteria and other pathogens may become present in the system.

A61H 2033/0037

{Arrangement for cleaning the fluid during use}

References relevant to classification in this group

This subgroup does not cover:

Treatment of water with magnetic or electric fields	C02F 1/48

A61H 2033/0041

{Cleaning and recovery of the fluid without mixing the cleaned and uncleaned fluid, e.g. using a recovery tank}

Definition statement

This subgroup covers:

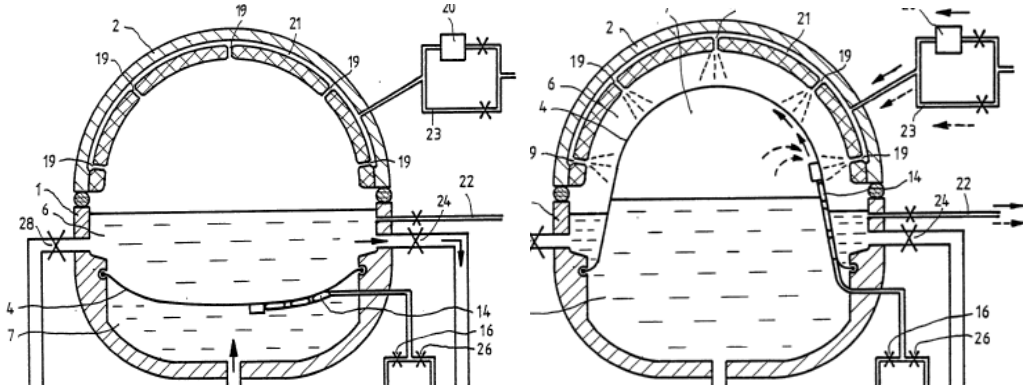

EP0356529

A61H 2033/0045

{with heat-recovery of waste fluid}

Informative references

Attention is drawn to the following places, which may be of interest for search:

Heated or cooled using heat exchangers (fresh/used fluids)	A61H 2201/0264

A61H 33/005

{Electrical circuits therefor}

Informative references

Attention is drawn to the following places, which may be of interest for search:

Non-electrical components therefore	A61H 33/60
Control means	A61H 2201/50

A61H 2033/0054

{with liquid level detectors}

Informative references

Attention is drawn to the following places, which may be of interest for search:

Other sensor	A61H 2201/5058

A61H 2033/0058

{controlled by the user}

Informative references

Attention is drawn to the following places, which may be of interest for search:

Control means - Interfaces to the user	A61H 2201/5023

A61H 2033/0062

{with electro-pneumatic or -hydraulic switches}

Informative references

Attention is drawn to the following places, which may be of interest for search:

Hydraulically controlled	A61H 2201/5051
Pneumatically controlled	A61H 2201/5056

A61H 2033/0066

{with low-voltage switching, e.g. using optical isolators, isolated transformers}

Informative references

Attention is drawn to the following places, which may be of interest for search:

Means for preventing injuries	A61H 2201/0173

A61H 2033/007

{with capacitors, e.g. proximity switches}

Informative references

Attention is drawn to the following places, which may be of interest for search:

Limit switches	A61H 2201/5066

A61H 2033/0075

{with opto-electric switches}

Informative references

Attention is drawn to the following places, which may be of interest for search:

Optical sensors	A61H 2201/5092

A61H 2033/0079

{using remote control signal transmission devices, e.g. ultrasonic, infra-red}

Informative references

Attention is drawn to the following places, which may be of interest for search:

Wireless	A61H 2201/5097

A61H 2033/0083

{Illumination}

Informative references

Attention is drawn to the following places, which may be of interest for search:

Illumination related features	A61H 2201/0188

A61H 33/0087

{Therapeutic baths with agitated or circulated water}

References relevant to classification in this group

This subgroup does not cover:

Generating a current of water for swimming training	A63B 69/125

Informative references

Attention is drawn to the following places, which may be of interest for search:

Heated or cooled	A61H 2201/02

A61H 33/0091

{Water agitated by means moving in the bath, i.e. without water connections to an outside pump circuit}

Definition statement

This subgroup covers:

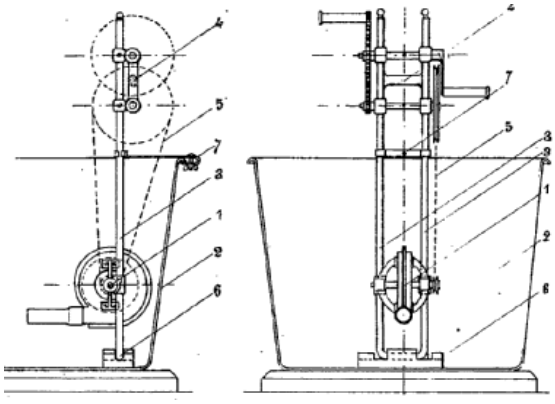

FR19974E

A61H 33/0095

{Arrangements for varying the temperature of the liquid}

Informative references

Attention is drawn to the following places, which may be of interest for search:

Heated or cooled	A61H 2201/02

A61H 33/02

Bathing devices for use with gas-containing liquid, or liquid in which gas is led or generated, e.g. carbon dioxide baths {(A61H 33/6026 takes precedence)}

References relevant to classification in this group

This subgroup does not cover:

Nozzles in the bathtub connected to an outside pump circuit without modification of the bathtub walls	A61H 33/6026

A61H 2033/021

{Nozzles having flow-regulation means}

Informative references

Attention is drawn to the following places, which may be of interest for search:

Control means	A61H 2201/50
Nozzles in general	B05B 1/00
Pool nozzles	E04H 4/169

A61H 2033/022

{with control means for regulating the air volume aspirated by a water jet}

Informative references

Attention is drawn to the following places, which may be of interest for search:

Gas-water mixing nozzles	A61H 33/027
Nozzles with flow regulating means	A61H 33/6052

A61H 2033/023

{with means in the air supply lines to prevent back-feed of water, e.g. anti-backflow valves, draining devices}

Informative references

Attention is drawn to the following places, which may be of interest for search:

Components specifically designed therefor	A61H 33/60

A61H 33/025

{Aerating mats or frames, e.g. to be put in a bath-tub}

Informative references

Attention is drawn to the following places, which may be of interest for search:

Components specifically designed for therefor	A61H 33/60

A61H 33/026

{Gas nozzles specially adapted therefor}

Informative references

Attention is drawn to the following places, which may be of interest for search:

Nozzles in general	B05B 1/00
Pool nozzles	E04H 4/169

A61H 33/027

{Gas-water mixing nozzles therefor}

Informative references

Attention is drawn to the following places, which may be of interest for search:

with control means for regulating the air volume aspirated by a water jet	A61H 2033/022

A61H 33/028

{Means for producing a flow of gas, e.g. blowers, compressors}

Informative references

Attention is drawn to the following places, which may be of interest for search:

mixer provided with a venturi element	B01F 5/0413

A61H 33/04

Appliances for sand, mud or foam baths; Appliances for metal baths, e.g. using metal salt solutions

References relevant to classification in this group

This subgroup does not cover:

Baths	A47K 3/04
using fluids loaded with particles	A61H 2009/0014

A61H 2033/041

{Baths with dry sand or other dry particles}

References relevant to classification in this group

This subgroup does not cover:

matresses with fluid-like particles	A61G 7/05738
using fluids loaded with particles	A61H 2009/0014
Mud baths; Baths using sand or other particles in water	A61H 2033/046

A61H 2033/042

{gas-fluidised or -heated during use}

Informative references

Attention is drawn to the following places, which may be of interest for search:

Heated or cooled	A61H 2201/02

A61H 2033/043

{Foam baths}

Definition statement

This subgroup covers:

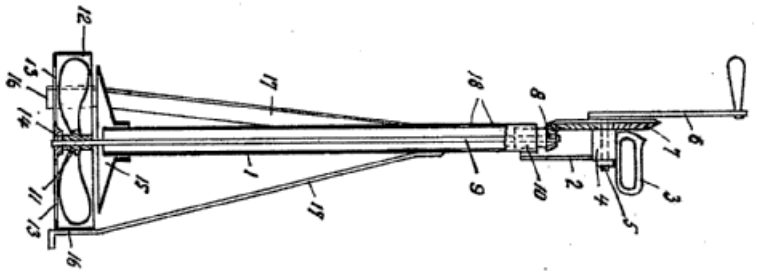

CH146707

A61H 2033/044

{Baths with herbs, e.g. infusions}

Informative references

Attention is drawn to the following places, which may be of interest for search:

Massage by means of rollers and treatment with drugs	A61H 15/02
Means for delivering media, e.g. drugs or cosmetics	A61H 2201/105

A61H 2033/045

{Liquid-metal baths}

Informative references

Attention is drawn to the following places, which may be of interest for search:

Hydraulic massage with particles, e.g. sand	A61H 2009/0014
Baths with dry sand or other dry particles	A61H 2033/041

A61H 2033/046

{Mud baths; Baths using sand or other particles in water}

Informative references

Attention is drawn to the following places, which may be of interest for search:

Hydraulic massage with particles, e.g. sand	A61H 2009/0014
Baths with dry sand or other dry particles	A61H 2033/041

A61H 2033/048

{Baths using solutions, e.g. salts}

Informative references

Attention is drawn to the following places, which may be of interest for search:

Hydraulic massage with particles, e.g. sand	A61H 2009/0014
Massage by means of rollers and treatment with drugs	A61H 15/02
Baths with dry sand or other dry particles	A61H 2033/041
Mud baths; Baths using sand or other particles in water	A61H 2033/046
Means for delivering media, e.g. drugs or cosmetics	A61H 2201/105

A61H 33/06

Artificial hot-air or cold-air baths; Steam or gas baths or douches, e.g. sauna or Finnish baths {(artificial climate rooms A61G 10/02)}

Informative references

Attention is drawn to the following places, which may be of interest for search:

Heating cooling appliances for medical or therapeutic use	A61F 7/00
Treatment room with artificial climate	A61G 10/02
Components specifically designed therefor	A61H 33/60
Heated or cooled	A61H 2201/02

A61H 2033/061

{Artificial hot-air baths}

Informative references

Attention is drawn to the following places, which may be of interest for search:

Heated	A61H 2201/0207

A61H 2033/062

{Artificial cold-air baths}

Informative references

Attention is drawn to the following places, which may be of interest for search:

Cooled	A61H 2201/0214

A61H 33/063

{Heaters specifically designed therefor}

Definition statement

This subgroup covers:

Specifically designed for Artificial hot-air or cold-air baths; Steam or gas baths or douches, e.g. sauna or Finnish baths

References relevant to classification in this group

This subgroup does not cover:

Steam boilers	F22B 29/00

A61H 33/065

{with steam generators}

Informative references

Attention is drawn to the following places, which may be of interest for search:

Mechanism for heating or cooling	A61H 2201/0221

A61H 33/066

{Cabins therefor}

Informative references

Attention is drawn to the following places, which may be of interest for search:

Further components specifically designed therefor	A61H 33/60

A61H 33/067

{Installations for the inside of such cabins, e.g. seats}

Informative references

Attention is drawn to the following places, which may be of interest for search:

Further components specifically designed therefor	A61H 33/60

A61H 2033/068

{Steam baths}

References relevant to classification in this group

This subgroup does not cover:

Steam baths for the face	A61H 33/12
Steam boilers	F22B 29/00

A61H 33/08

Air douches for hygienic purposes (hair-driers A45D 20/00; body-drying devices A47K 10/48; electric heating elements H05B)

References relevant to classification in this group

This subgroup does not cover:

Hair-driers	A45D 20/00
Body-drying devices	A47K 10/48
Inhalators A61M 15/009	A61M 15/009
Heated	A61H 2201/0207
Cooled	A61H 2201/0214
Mechanism for heating or cooling	A61H 2201/0221

A61H 33/10

Devices on tubs for steam baths

Definition statement

This subgroup covers:

bathtub covers e.g. for steam baths

A61H 33/12

Steam baths for the face

Informative references

Attention is drawn to the following places, which may be of interest for search:

Steam baths	A61H 2033/068

A61H 33/14

Devices for gas baths with ozone, hydrogen, or the like (production of ozone or hydrogen C01B, C25B 1/02)

References relevant to classification in this group

This subgroup does not cover:

Production of Hydrogen	C01B 3/00
Production of Ozone	C01B 13/00
Apparatuses for separating the constituents of gaseous mixtures by liquefaction or solidification	F25J 3/00

Informative references

Attention is drawn to the following places, which may be of interest for search:

Sealing means for masks	**A61M2016/0627**

A61H 2033/141

{with ionised gas, e.g. ozone}

References relevant to classification in this group

This subgroup does not cover:

Production of Ozone	C01B 13/00

A61H 2033/143

{with oxygen}

References relevant to classification in this group

This subgroup does not cover:

Production of Oxygen	C01B 13/00

A61H 2033/145

{with CO_2}

References relevant to classification in this group

This subgroup does not cover:

Production of CO2	C01B 31/20

A61H 2033/146

{with nitrogen}

References relevant to classification in this group

This subgroup does not cover:

Production of Nitrogen	C01B 21/00

A61H 2033/148

{with hydrogen}

References relevant to classification in this group

This subgroup does not cover:

Production of Hydrogen	C01B 3/00

A61H 33/60

{Components specifically designed for the therapeutic baths of groups A61H 33/00 (plumbing E03C 1/00)}

References relevant to classification in this group

This subgroup does not cover:

Plumbing in general	E03C 1/00
Heaters for bath tubes	F24H 1/0081

A61H 33/6005

{Special constructive structural details of the bathtub, e.g. of the walls or supporting structure}

Definition statement

This subgroup covers:

- Specific construction of the walls or the supporting structure of a bathtub
- Specific layout of the bathtub or the seats in it
- Specific materials or dimensions.
- Specific constructive aspects of bathtubs not covered by the other classes of A61H 33/0087, A61H 33/02, A61H 33/04, A61H 33/06

A61H 33/601

{Inlet to the bath}

Definition statement

This subgroup covers:

To take water into the bathtub

Informative references

Attention is drawn to the following places, which may be of interest for search:

for use with gas-containing liquid	A61H 33/02

A61H 33/6015

{Cascade massage}

Definition statement

This subgroup covers:

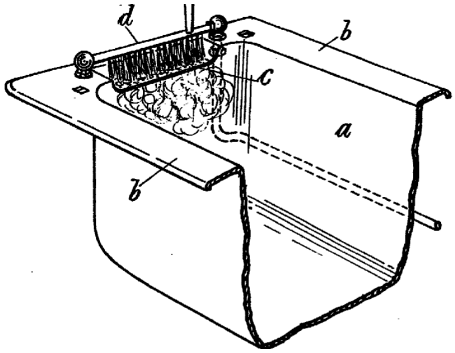

GB463284

A61H 33/6021

{Nozzles}

Definition statement

This subgroup covers:

Nozzles specifically designed for the therapeutic baths of groups A61H 33/0087, A61H 33/02, A61H 33/04 and A61H 33/06

References relevant to classification in this group

This subgroup does not cover:

Nozzles for use with gas-containing liquid	A61H 33/02
Nozzles in general	B05B 1/00
Pool nozzles	E04H 4/169

A61H 33/6026

{Nozzles in the bathtub connected to an outside pump circuit without modification of the walls}

Informative references

Attention is drawn to the following places, which may be of interest for search:

Aerating mats or frames, e.g. to be put in a bath-tub	A61H 33/025

A61H 33/6031

{Extendible or retractable}

Informative references

Attention is drawn to the following places, which may be of interest for search:

Control means	A61H 2201/50

A61H 33/6036

{Hand-held connected to a supply hose}

Informative references

Attention is drawn to the following places, which may be of interest for search:

Handheld suction-kneading massage, power driven	A61H 7/005
Handheld massage by means of rollers, balls, power driven	A61H 15/0085
Handheld massage by means of rollers, balls	A61H 15/0092
Handheld	A61H 2201/0153

A61H 33/6042

{Used also as outlet}

Definition statement

This subgroup covers:

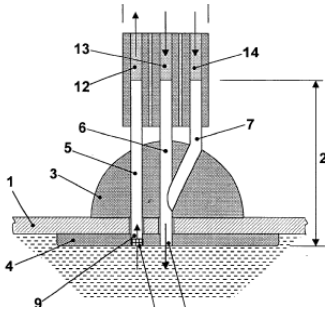

EP1293189

A61H 33/6047

{With incorporated pump means}

References relevant to classification in this group

This subgroup does not cover:

Recirculating pumps for swimming pool water	E04H 4/1245

A61H 33/6052

{Having flow regulating means}

Informative references

Attention is drawn to the following places, which may be of interest for search:

Nozzles with control means for regulating the air volume aspirated by water jet	A61H 2033/022

A61H 33/6057

{Comprising means producing pulsating or intermittent streams (for massage, A61H 9/0007)}

References relevant to classification in this group

This subgroup does not cover:

Pulsating or intermittent streams for massage	A61H 9/0007

A61H 33/6063

{Specifically adapted for fitting in bathtub walls}

References relevant to classification in this group

This subgroup does not cover:

Generating a current of water for swimming training	A63B 69/125

A61H 33/6068

{Outlet from the bath}

Definition statement

This subgroup covers:
To drain water from the bathtub

A61H 33/6073

{Intake mouths for recirculation of fluid in whirlpool baths}

Definition statement

This subgroup covers:
To drain water from the bathtub to a recirculation system

A61H 33/6078

{Combined with waste outlets}

Definition statement

This subgroup covers:

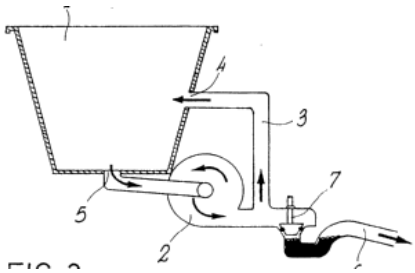

EP0418204

A61H 33/6084

{For filling to the border or edge of the bath, i.e. no border to be seen}

References relevant to classification in this group

This subgroup does not cover:

Circumferential gutters for swimming pools	E04H 4/1227

A61H 33/6089

{Specific construction features for further massaging means, i.e. not for the nozzles}

Definition statement

This subgroup covers:

Comprising the hydraulic massage brought around by the nozzles of the bathtub and also further massage means

A61H 33/6094

{Extending through the wall of the bathing device}

Definition statement

This subgroup covers:

The walls of the bathing tub being provided with apertures for the further massaging means

A61H 35/00

Baths for specific parts of the body {(electric circuits therefor A61H 33/005; specific components therefor A61H 33/60)}

Definition statement

This group covers:

Apparatus or processes which are not used for surgical purposes (e.g. baths) that are specially adapted for covering, soaking, or immersing specific portions of bodies, within fluids (e.g. steam, water) or fluent materials (e.g. sand, mud) for specific therapeutic purposes, in a manner that is distinct from the common bathing process for cleaning human bodies

Informative references

Attention is drawn to the following places, which may be of interest for search:

Bidets without upward-spraying means	**A47K3/22**
Showers	A47K 3/28
Body washing or cleaning	A47K 7/00
Devices for specific parts of the body	A61H 2205/00
Irrigators	A61M 3/02
Devices for sub aquatic intestinal cleaning	A61M 9/00
Domestic plumbing	E03C 1/00

Special rules of classification within this group

Components specifically designed for the therapeutic baths of this groups are classified in A61H 33/60

For additional information the orthogonal classification (A61H 2201/00, A61H 2230/85) is used.

A61H 35/002

{Breast baths}

Informative references

Attention is drawn to the following places, which may be of interest for search:

Devices for the breast	A61H 2205/082

A61H 2035/004

{for the whole body except the head}

References relevant to classification in this group

This subgroup does not cover:

Bathing devices for special therapeutic or hygienic purposes for the whole body	A61H 33/00

A61H 35/006

{for the feet}

Informative references

Attention is drawn to the following places, which may be of interest for search:

Implements for cleaning the feet or toes	A47K 7/026
Devices for the feet	A61H 2205/12

A61H 35/008

{for the head (A61H 35/02 and A61H 35/04 takes precedence)}

Informative references

Attention is drawn to the following places, which may be of interest for search:

Devices for the head	A61H 2205/02

A61H 35/02

for the eyes

Definition statement

This subgroup covers:
Limited to real baths (pools)

References relevant to classification in this group

This subgroup does not cover:

for introducing droplets in the eyes	A61F 9/0008

Informative references

Attention is drawn to the following places, which may be of interest for search:

Devices for the eyes	A61H 2205/024

A61H 35/04

for the nose

Informative references

Attention is drawn to the following places, which may be of interest for search:

Massage devices for cavities, e.g. nose	A61H 21/00
Inhalators	A61M 15/009
Devices for the nose	A61H 2205/023

A61H 36/00

Sweating suits

Definition statement

This group covers:

Articles of clothing that at least partially enclose human bodies for the primary purpose of increasing the local temperature (e.g. insulated, include heating elements) or humidity (e.g. constructed of partially air tight material) of the portion of the human bodies covered to a point where the localized temperature or humidity is beyond the range that human beings normally consider physically comfortable (i.e. creates localized sauna-like environment)

Special rules of classification within this group

For additional information the orthogonal classification (A61H 2201/00, A61H 2230/85) is used.

A61H 37/00

Accessories for massage

Definition statement

This group covers:

Specially adapted components for the above types of apparatus (e.g. body floating supports for relaxation in water).

Special rules of classification within this group

For additional information the orthogonal classification (A61H 2201/00, A61H 2230/85) is used.

A61H 37/005

{Body floating supports for relaxation in water}

References relevant to classification in this group

This subgroup does not cover:

Swimming boards	A63B 69/14
Life-buoys, life-belts	B63C 9/08

A61H 39/00

Devices for locating or stimulating specific reflex points of the body for physical therapy, e.g. acupuncture (chiropodists' instruments A61B 17/54; {for radiation therapy A61N 5/0619})

Definition statement

This group covers:

Auxiliary appliances or accessories specially adapted forlocating and stimulating specific reflex points, as tipically known form the Traditional Chinese Medicine (TCM).

Informative references

Attention is drawn to the following places, which may be of interest for search:

Chiropodist's instruments	A61B 17/54
Footwear with acupressure points	A43B 7/146 ,

Special rules of classification within this group

For additional information the orthogonal classification (A61H 2201/00, A61H 2230/85) is used.

A61H 39/002

{Using electric currents (electrotherapy A61N 1/32)}

Informative references

Attention is drawn to the following places, which may be of interest for search:

Electrotherapy	A61N 1/00
further special therapeutic means, e.g. electrotherapy	A61H 2201/10
Electrotherapy combined with active exercising	A63B 2213/004

A61H 2039/005

{by means of electromagnetic waves, e.g. I.R., U.V. rays}

Informative references

Attention is drawn to the following places, which may be of interest for search:

Magnetotherapy	A61N 2/00

Radiation therapy	A61N 5/00
Chromotherapy	A61N 2005/0663
Infra-red	A61N 2005/0659
Ultraviolet	A61N 2005/0661
Radiation by LEDs	A61N 2005/0651

A61H 39/007

{Stimulation by mechanical vibrations, e.g. ultrasonic}

Informative references

Attention is drawn to the following places, which may be of interest for search:

Ultrasonic transducers for vibration massage	A61H 23/0245

A61H 39/02

Devices for locating such points

Informative references

Attention is drawn to the following places, which may be of interest for search:

Measuring impedance, e.g. skin conductivity	A61H 2230/65

A61H 39/04

Devices for pressing such points, e.g. Shiatsu {or Acupressure} (Massage or pressure on general areas A61H 9/00 - A61H 23/00)

References relevant to classification in this group

This subgroup does not cover:

Massage without substantial movement between the skin and the device	A61H 7/001

Informative references

Attention is drawn to the following places, which may be of interest for search:

For specific parts of the body	A61H 2205/00

A61H 39/06

Devices for heating or cooling such points within cell-life limits (cauterisers, moxaburners, cryogenic apparatus A61B 18/06; heating or cooling appliances for medical treatment of general areas of the human body A61F 7/00)

Informative references

Attention is drawn to the following places, which may be of interest for search:

Heating cooling appliances for medical or therapeutic use	A61F 7/00
Heaters for hot-air baths	A61H 33/063
Heating or cooling	A61H 2201/02
Control of temperature	G05D 23/00

A61H 39/08

Devices for applying needles to such points, i.e. for acupuncture; {Acupuncture needles or accessories therefor}

Informative references

Attention is drawn to the following places, which may be of interest for search:

For specific parts of the body	A61H 2205/00

A61H 39/083

{Needle tubes}

Informative references

Attention is drawn to the following places, which may be of interest for search:

Protective casings for instruments for surgery or diagnosis	A61B 50/00
Packages specially adapted for needles	A61M 5/002

A61H 39/086

{Acupuncture needles}

Informative references

Attention is drawn to the following places, which may be of interest for search:

Needles	A61M 5/00

A61H 99/00

Subject matter not provided for in other groups of this subclass

Definition statement

This group covers:
General massage methods without technical means, non patentable per se, are classified here

Special rules of classification within this group

For additional information the orthogonal classification (A61H 2201/00, A61H 2230/85) is used.

A61H 2201/00

Characteristics of apparatus not provided for in the preceding codes

Definition statement

This group covers:
Classes which are used for refining the preceding scheme

A61H 2201/01

Constructive details

Definition statement

This subgroup covers:
Classes which are used for specifying the constructive details not defined in the preceding scheme

A61H 2201/0103

inflatable

References relevant to classification in this group

This subgroup does not cover:

inflated cuffs	A61H 9/0078

Informative references

Attention is drawn to the following places, which may be of interest for search:

Beds for nursing with inflatable chambers	A61G 7/05769
inflatable active exercising devices	A63B 2225/62

A61H 2201/0107

modular

Definition statement

This subgroup covers:
Employing or involving modules in design or construction.

References relevant to classification in this group

This subgroup does not cover:

Interchangeable interface surface	A61H 2201/1685

A61H 2201/0111

watertight

Informative references

Attention is drawn to the following places, which may be of interest for search:

Surface of the interface	A61H 2201/1683

A61H 2201/0115

used in water

Informative references

Attention is drawn to the following places, which may be of interest for search:

The patient being immersed in liquid	A61H 2203/02

A61H 2201/0119

Support for the device

Definition statement

This subgroup covers:
Anchorage or support for the device during use

Informative references

Attention is drawn to the following places, which may be of interest for search:

For active exercising	A63B 21/16

A61H 2201/0123

on a door

Informative references

Attention is drawn to the following places, which may be of interest for search:

For active exercising	A63B 21/1627

Glossary of terms

In this subgroup, the following terms (or expressions) are used with the meaning indicated:

Jamb	frame of the door

A61H 2201/0126

on a wall

Informative references

Attention is drawn to the following places, which may be of interest for search:

For active exercising	A63B 21/169

A61H 2201/013

Suction cups

Informative references

Attention is drawn to the following places, which may be of interest for search:

Suction cups for massaging	A61H 2009/0064
Suction cups for active exercising devices	A63B 2225/05

A61H 2201/0134

Cushion or similar support

Informative references

Attention is drawn to the following places, which may be of interest for search:

For active exercising	A63B 2210/00

A61H 2201/0138

incorporated in furniture

Informative references

Attention is drawn to the following places, which may be of interest for search:

For active exercising	A63B 2210/00

A61H 2201/0142

Beds

Informative references

Attention is drawn to the following places, which may be of interest for search:

Sofas, Couches, Beds	A47C 17/00
Beds for nursing	A61G 7/00
For active exercising	A63B 2210/04

A61H 2201/0146

Mattresses

Informative references

Attention is drawn to the following places, which may be of interest for search:

Beds for nursing	A61G 7/00

A61H 2201/0149

Seat or chair

Informative references

Attention is drawn to the following places, which may be of interest for search:

Chairs	A47C 1/00
For active exercising	A63B 2210/02
Massaging seats for vehicles	B60N 2/448

A61H 2201/0153

hand-held

Definition statement

This subgroup covers:
The whole device being hand-held, not just the interface

Informative references

Attention is drawn to the following places, which may be of interest for search:

Handheld suction-kneading massage, power driven	A61H 7/005
Handheld massage by means of rollers, balls, power driven	A61H 15/0085
Handheld massage by means of rollers, balls	A61H 15/0092
Hand-held nozzles	A61H 33/6036

A61H 2201/0157

portable

Definition statement

This subgroup covers:
Build to be easily carried or moved

References relevant to classification in this group

This subgroup does not cover:

Handheld or hand-driven device for rubbing or brushing	A61H 7/003
Handheld suction-kneading massage, power driven	A61H 7/005

Handheld massage by means of rollers, balls, power driven	A61H 15/0085
Handheld massage by means of rollers, balls	A61H 15/0092
Handheld	A61H 2201/0153
Wearable interface	A61H 2201/165

Informative references

Attention is drawn to the following places, which may be of interest for search:

Size reducing arrangements	A61H 2201/0161

A61H 2201/0161

Size reducing arrangements when not in use, for stowing or transport

Informative references

Attention is drawn to the following places, which may be of interest for search:

Folding or stowable tables	A47B 3/00
Foldable chairs	A47C 4/00
Size reducing for active exercising apparatus	A63B 2210/00

A61H 2201/0165

Damping, vibration related features

Informative references

Attention is drawn to the following places, which may be of interest for search:

Shock absorbers for active exercising	A63B 2071/0063

A61H 2201/0169

Noise reduction

Definition statement

This subgroup covers:
by controlling the vibration

A61H 2201/0173

Means for preventing injuries

Informative references

Attention is drawn to the following places, which may be of interest for search:

For active exercising	A63B 71/0054

A61H 2201/0176

By stopping operation

Informative references

Attention is drawn to the following places, which may be of interest for search:

For active exercising	A63B 2071/0081

A61H 2201/018

By limiting the applied torque or force

Informative references

Attention is drawn to the following places, which may be of interest for search:

For active exercising	A63B 2071/0072

A61H 2201/0184

by raising an alarm

Informative references

Attention is drawn to the following places, which may be of interest for search:

Interface to the user	A61H 2201/5023

A61H 2201/0188

Illumination related features

References relevant to classification in this group

This subgroup does not cover:

Illumination in bathing devices	A61H 2033/0083

A61H 2201/0192

Specific means for adjusting dimensions

Informative references

Attention is drawn to the following places, which may be of interest for search:

For active exercising	A63B 2225/09

A61H 2201/0196

automatically adjusted according to anthropometric data of the user

Informative references

Attention is drawn to the following places, which may be of interest for search:

For active exercising	A63B 2225/096

A61H 2201/02

heated or cooled

Definition statement

This subgroup covers:
Heating or cooling for massage purposes, not for a correct functioning of the device

Informative references

Attention is drawn to the following places, which may be of interest for search:

Heating cooling appliances for medical or therapeutic use	A61F 7/00
Heaters for hot-air baths	A61H 33/063
Control of temperature	G05D 23/00

A61H 2201/0207

heated

Informative references

Attention is drawn to the following places, which may be of interest for search:

warming pads for medical or therapeutic use	A61F 7/08
For active exercising	A63B 2225/64
Heated bath tubs	F24H 1/0072

A61H 2201/0214

cooled

Informative references

Attention is drawn to the following places, which may be of interest for search:

Cooling bags for medical or therapeutic use	A61F 7/10
For active exercising	A63B 2225/66

A61H 2201/0221

Mechanism for heating or cooling

Informative references

Attention is drawn to the following places, which may be of interest for search:

Heating cooling appliances for medical or therapeutic use	A61F 7/00
Heaters for hot-air baths	A61H 33/063
Control means	A61H 2201/50
Temperature sensors	A61H 2201/5082
Control of temperature	G05D 23/00

A61H 2201/0228

heated by an electric resistance element

Informative references

Attention is drawn to the following places, which may be of interest for search:

Electric heating for medical or therapeutic use	A61F 7/007

A61H 2201/0235

Thermistors with Positive Temperature Coefficient [PTC]

Informative references

Attention is drawn to the following places, which may be of interest for search:

PTC non-adjustable resistors	H01C 7/02

A61H 2201/0242

by a fluid circulating in the apparatus

Definition statement

This subgroup covers:
within the apparatus, not on the user

A61H 2201/025

by direct air flow on the patient's body

References relevant to classification in this group

This subgroup does not cover:

Gas-fluidised or -heated sand baths	A61H 2033/042
Artificial hot-air baths	A61H 2033/061

Informative references

Attention is drawn to the following places, which may be of interest for search:

hot or cold fluid for medical or therapeutic use	A61F 7/0053, A61F 7/0085

A61H 2201/0257

by a heat accumulator, e.g. a sand or liquid reservoir

Informative references

Attention is drawn to the following places, which may be of interest for search:

Appliances for sand, mud, or foam baths	A61H 33/04

A61H 2201/0264

using heat exchanger, e.g. between fresh and used fluids

References relevant to classification in this group

This subgroup does not cover:

Bathing or washing device with waste-fluid-heat recovery	A61H 2033/0045

A61H 2201/0278

by chemical reaction

Informative references

Attention is drawn to the following places, which may be of interest for search:

Heat by chemical reaction for medical or therapeutic use	A61F 7/03

A61H 2201/0285

with Peltier elements

Informative references

Attention is drawn to the following places, which may be of interest for search:

Air-conditioning devices using Peltier effect	B60H 1/00478
Machines cooling with Peltier effect	F25B 21/00
Thermo-electric devices using Peltier effect	H01L 35/28

A61H 2201/0292

with microwaves

Informative references

Attention is drawn to the following places, which may be of interest for search:

Microwaves for heating fluids	H05B 6/80

A61H 2201/10

with further special therapeutic means, e.g. electrotherapy, magneto therapy or radiation therapy, chromo therapy, infra-red or ultraviolet therapy

References relevant to classification in this group

This subgroup does not cover:

Electrotherapy for causing a change in the consciousness	A61M 2021/0072

Informative references

Attention is drawn to the following places, which may be of interest for search:

Heating cooling appliances for medical or therapeutic use	A61F 7/00
Heated or cooled	A61H 2201/02
Aromatherapy	A61M 2021/0016
Electrotherapy	A61N 1/00
Electrotherapy combined with active exercising	A63B 2213/004
Magnetotherapy	A61N 2/00
Radiation therapy	A61N 5/00
Chromotherapy	A61N 2005/0663
Infra-red	A61N 2005/0659
Ultraviolet	A61N 2005/0661
Radiation by LEDs	A61N 2005/0651
Preparations for care of the skin	A61Q 19/00

A61H 2201/102

with aromatherapy

Informative references

Attention is drawn to the following places, which may be of interest for search:

Aromatherapy	**A61M21/00A3**

A61H 2201/105

with means for delivering media, e.g. drugs or cosmetics

Informative references

Attention is drawn to the following places, which may be of interest for search:

Appliances specially adapted for applying liquid, e.g. using roller or ball	A45D 34/04

A61H 2201/107

Respiratory gas

References relevant to classification in this group

This subgroup does not cover:

Respiratory gas for active exercising	A63B 2213/005

A61H 2201/12

Driving means

References relevant to classification in this group

This subgroup does not cover:

Special force transmission means	A61H 2201/14
Physical interface with the patient	A61H 2201/16

Informative references

Attention is drawn to the following places, which may be of interest for search:

Vibration driving means	A61H 23/00

A61H 2201/1207

with electric or magnetic drive

Informative references

Attention is drawn to the following places, which may be of interest for search:

Vibration electric or magnetic driving means	A61H 23/02

A61H 2201/1215

Rotary drive

Informative references

Attention is drawn to the following places, which may be of interest for search:

Vibration electric or magnetic rotary driving means	A61H 23/0254

A61H 2201/1223

Frequency controlled AC motor

Informative references

Attention is drawn to the following places, which may be of interest for search:

Vibration driving means powered with frequencies not related to mains frequency	A61H 2023/0209

A61H 2201/123

Linear drive

Definition statement

This subgroup covers:

Unit containing a rotary drive and a conversion system transforming the rotation in a linear movement, e.g. screw-jack

References relevant to classification in this group

This subgroup does not cover:

Movement conversion means separated from the drive unit	A61H 2201/1481

Informative references

Attention is drawn to the following places, which may be of interest for search:

Translation or oscillation resulting from magnetic field	A61H 23/0218
Linear movement of interface	A61H 2201/1664

A61H 2201/1238

with hydraulic or pneumatic drive

Informative references

Attention is drawn to the following places, which may be of interest for search:

Pneumatic or hydraulic massage	A61H 9/00
Vibration hydraulic or pneumatic driving means	A61H 23/04
For active exercising	A63B 21/008

A61H 2201/1246

by piston-cylinder systems

Informative references

Attention is drawn to the following places, which may be of interest for search:

Hydraulic piston-cylinder for active exercising	A63B 21/0083

Pneumatic piston-cylinder for active exercising	A63B 21/0087

A61H 2201/1253

driven by a human being, e.g. hand driven

References relevant to classification in this group

This subgroup does not cover:

Handheld or hand-driven device for rubbing or brushing	A61H 7/003
Handheld suction-kneading massage, power driven	A61H 7/005
Bladders inflated by user's body movement	A61H 9/0085
Handheld massage by means of rollers, balls, power driven	A61H 15/0085
Handheld massage by means of rollers, balls	A61H 15/0092
Handheld	A61H 2201/0153

Informative references

Attention is drawn to the following places, which may be of interest for search:

Hand percussion	A61H 23/06

A61H 2201/1261

combined with active exercising of the patient

Informative references

Attention is drawn to the following places, which may be of interest for search:

Apparatus for passive exercising which can be used also for active exercising	A63B 21/00178

A61H 2201/1269

Passive exercise driven by movement of healthy limbs

Definition statement

This subgroup covers:

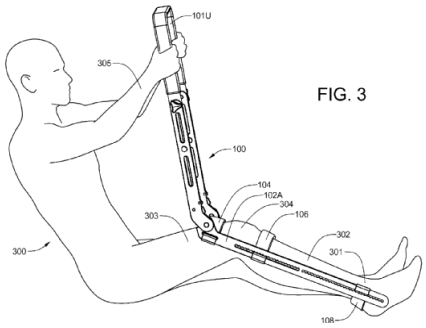

FIG. 3

US2011224585

A61H 2201/1276

by the other leg or arm

Definition statement

This subgroup covers:

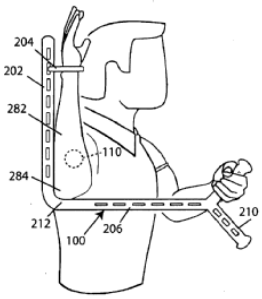

US2008312053

A61H 2201/1284

using own weight

References relevant to classification in this group

This subgroup does not cover:

Bladders inflated by user's body movement	A61H 9/0085
Using own weight for active exercising	A63B 21/00185

Informative references

Attention is drawn to the following places, which may be of interest for search:

Traction table	A61H 1/0222
Patient hanging	A61H 2203/0481

A61H 2201/1292

Therapy performed on humans by animals

Definition statement

This subgroup covers:

e.g. Fishes, shells, etc for skin treatment or horse-saddle with massage effect for a rider

References relevant to classification in this group

This subgroup does not cover:

Therapy specially adapted for being performed on animals	A61H 2203/03

A61H 2201/14

Special force transmission means, i.e. between the driving means and the interface with the user

References relevant to classification in this group

This subgroup does not cover:

Driving means	A61H 2201/12
Physical interface with the patient	A61H 2201/16

A61H 2201/1409

Hydraulic or pneumatic means

Informative references

Attention is drawn to the following places, which may be of interest for search:

Hydraulic or pneumatic transmission means for active exercising	A63B 21/158

A61H 2201/1418

Cam

Informative references

Attention is drawn to the following places, which may be of interest for search:

Cam shaped pulleys transmission means for active exercising	A63B 21/155

A61H 2201/1427

Wobbling plate

Definition statement

This subgroup covers:

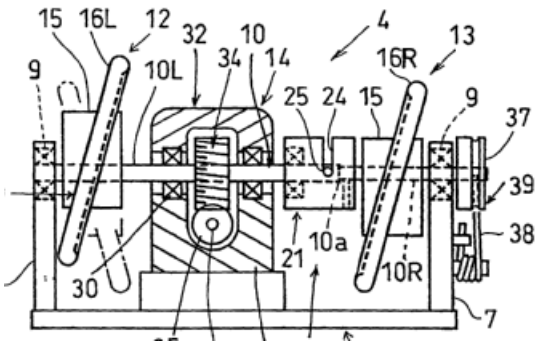

EP1000600

References relevant to classification in this group

This subgroup does not cover:

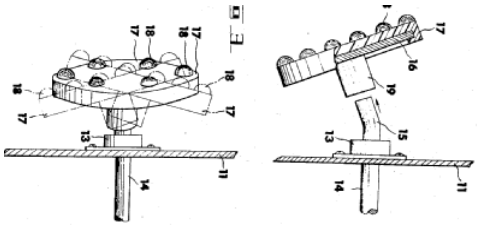

US3678924

Wobbling movement of interface	A61H 2201/1661

A61H 2201/1436

Special crank assembly

Definition statement

This subgroup covers:

Specific applications of crank assemblies for massage and therapy devices

A61H 2201/1445

Overrunning clutches; One-way clutches

Informative references

Attention is drawn to the following places, which may be of interest for search:

For active exercising	A63B 21/157

A61H 2201/1454

Special bearing arrangements

Definition statement

This subgroup covers:

e.g. bearings on both sides of a rotating unbalanced mass for stabilizing the structure

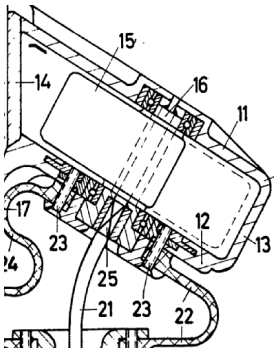

DE1928876

A61H 2201/1463

Special speed variation means, i.e. speed reducer

Definition statement

This subgroup covers:

Specific applications for massage and therapy devices

A61H 2201/1472

Planetary gearing

Definition statement

This subgroup covers:

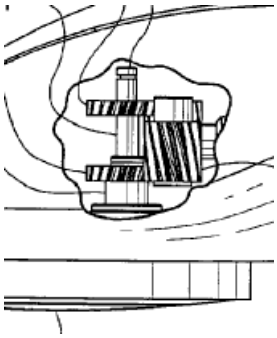

US2003125754s

A61H 2201/1481

Special movement conversion means

Definition statement

This subgroup covers:

Specific applications for massage and therapy devices

A61H 2201/149

rotation-linear or vice versa

References relevant to classification in this group

This subgroup does not cover:

Single unit containing a itself rotary drive and a conversion system transforming the rotation in a linear movement	A61H 2201/123

A61H 2201/16

Physical interface with patient

Definition statement

This subgroup covers:

Interfaces implying an exchange of forces with the user

References relevant to classification in this group

This subgroup does not cover:

Driving means	A61H 2201/12
Special force transmission means	A61H 2201/14
Electronic interface with the user	**A61H201/50F**

A61H 2201/1602

kind of interface, e.g. head rest, knee support or lumbar support

Definition statement

This subgroup covers:
Specific features of the interface with the patient

Special rules of classification within this group

Part of the body to be treated to be classified in A61H 2205/00

A61H 2201/1604

Head

Informative references

Attention is drawn to the following places, which may be of interest for search:

Chairs with support for the head	A47C 7/38
Beds, sofas or the like with support for the head	A47C 20/00
Devices for treating head	A61H 2205/02

A61H 2201/1607

Holding means therefor

References relevant to classification in this group

This subgroup does not cover:

holding means for the head for active exercising	A63B 21/4003

A61H 2201/1609

Neck

Informative references

Attention is drawn to the following places, which may be of interest for search:

Devices for treating the neck	A61H 2205/04

A61H 2201/1611

Holding means therefor

References relevant to classification in this group

This subgroup does not cover:

holding means for the neck for active exercising	A63B 21/4003

A61H 2201/1614

Shoulder, e.g. for neck stretching

Informative references

Attention is drawn to the following places, which may be of interest for search:

Devices for treating the shoulders	A61H 2205/062

A61H 2201/1616

Holding means therefor

References relevant to classification in this group

This subgroup does not cover:

holding means for the shoulders for active exercising	A63B 21/4005

A61H 2201/1619

Thorax

Informative references

Attention is drawn to the following places, which may be of interest for search:

Devices for treating the thorax	A61H 2205/082, A61H 2205/084

A61H 2201/1621

Holding means therefor

References relevant to classification in this group

This subgroup does not cover:

holding means for the chest/back for active exercising	A63B 21/4007

A61H 2201/1623

Back

Informative references

Attention is drawn to the following places, which may be of interest for search:

Chairs with support for the back	A47C 7/40
Devices for treating the back	A61H 2205/081

A61H 2201/1626

Holding means therefor

References relevant to classification in this group

This subgroup does not cover:

holding means for the back for active exercising	A63B 21/4007

A61H 2201/1628

Pelvis

Definition statement

This subgroup covers:
Also waist

Informative references

Attention is drawn to the following places, which may be of interest for search:

Devices for treating the crotch	A61H 2205/085
Devices for treating the buttocks	A61H 2205/086
Devices for treating the genitals	A61H 2205/087
Devices for treating the hip	A61H 2205/088

A61H 2201/163

holding means therefor

References relevant to classification in this group

This subgroup does not cover:

holding means for the waist for active exercising	A63B 21/4009

A61H 2201/1633

Seat (A61H 2201/0149 takes precedence)

References relevant to classification in this group

This subgroup does not cover:

Benches for active exercising	A63B 21/4029

Informative references

Attention is drawn to the following places, which may be of interest for search:

Chairs	A47C 1/00

A61H 2201/1635

Hand or arm, e.g. handle (hand-held, A61H 2201/0153; fore-arm support, A61H 2003/006)

Definition statement

This subgroup covers:
also handrails

Informative references

Attention is drawn to the following places, which may be of interest for search:

Chairs with support for the arms	A47C 7/54
Beds, sofas or the like with support for the arms	A47C 20/023
Devices for treating the arms	A61H 2205/06
Devices for treating the hands	A61H 2205/065

A61H 2201/1638

Holding means therefor

References relevant to classification in this group

This subgroup does not cover:

holding means for the upper limb for active exercising	A63B 21/4017

A61H 2201/164

Feet or leg, e.g. pedal

Definition statement

This subgroup covers:
all parts of leg, e.g. knee

Informative references

Attention is drawn to the following places, which may be of interest for search:

Chairs with support for the legs or feet	A47C 7/50
Stand alone support for the legs or feet	A47C 16/00
Beds, sofas or the like with support for the legs	A47C 20/021
Devices for treating the legs	A61H 2205/10

A61H 2201/1642

Holding means therefor

References relevant to classification in this group

This subgroup does not cover:

holding means for the lower limbs for active exercising	A63B 21/4011

A61H 2201/1645

contoured to fit the user

Informative references

Attention is drawn to the following places, which may be of interest for search:

for active exercising	A63B 21/4039

A61H 2201/1647

the anatomy of a particular individual

Informative references

Attention is drawn to the following places, which may be of interest for search:

Automatically adjusted according to anthropometric data of patient	A61H 2201/0196

A61H 2201/165

Wearable interfaces

Definition statement

This subgroup covers:

interface to be worn and portable or attachable to a massaging or exercising device, i.e. a vest or a armband which can be used alone or attached to a machine and enables at least small movements of the user respect to the machine (NOT a band attached to a device and used for fixing a user to the device)

Informative references

Attention is drawn to the following places, which may be of interest for search:

Portable	A61H 2201/0157

holding means for body specific parts	A61H 2201/1602

A61H 2201/1652

Harness

Definition statement

This subgroup covers:

A set of straps enabling the application of a force in at least one direction to a person carrying it without sliding-off, alone or within a garment

US7993248

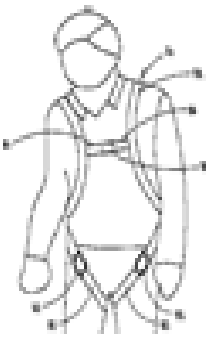

Informative references

Attention is drawn to the following places, which may be of interest for search:

Body harness	A62B 5/00

A61H 2201/1654

Layer between the skin and massage elements, e.g. fluid or ball

Definition statement

This subgroup covers:

To be used for all kind of massages, when a layer is used between the user and the massage elements, e.g. for protecting, for keeping dry, for distributing the force on the skin.

A61H 2201/1657

Movement of interface, i.e. force application means

Definition statement

This subgroup covers:

Movement of the part of the device which is contact with the patient

References relevant to classification in this group

This subgroup does not cover:

Electronic interface with the user	**A61H201/50F**

A61H 2201/1659

Free spatial automatic movement of interface within a working area, e.g. Robot

Definition statement

This subgroup covers:

Three-dimensional movement freely programmable according to the needs

Informative references

Attention is drawn to the following places, which may be of interest for search:

Free movement of interface for active exercising	A63B 21/4043

A61H 2201/1661

Wobbling interface, e.g. Stewart platform or Hexapod (nutating movement, A61H 2001/0207)

Definition statement

This subgroup covers:

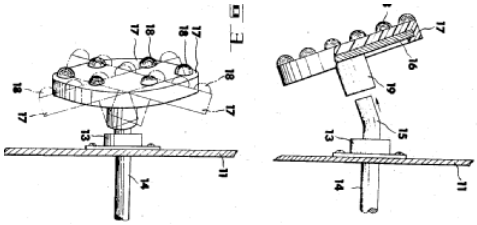

US3678924

References relevant to classification in this group

This subgroup does not cover:

Nutating movement	A61H 2001/0207
Wobbling plate as transmission means	A61H 2201/1427

A61H 2201/1664

linear

References relevant to classification in this group

This subgroup does not cover:

knee and hip moved by translation	A61H 1/0259

Informative references

Attention is drawn to the following places, which may be of interest for search:

Linear drive	A61H 2201/123

A61H 2201/1666

multidimensional

References relevant to classification in this group

This subgroup does not cover:

Free spatial automatic movement of interface	**A61H201/16B2**

A61H 2201/1669

moving along the body in a reciprocating manner

Informative references

Attention is drawn to the following places, which may be of interest for search:

Physical interface contoured to fit the user	A61H 2201/1645
Reciprocating interface for active exercising	A63B 21/4045

A61H 2201/1671

rotational

References relevant to classification in this group

This subgroup does not cover:

Stretching or bending by rotating cycling movement	A61H 1/0214
Massage by means of rollers, balls	A61H 15/00

Informative references

Attention is drawn to the following places, which may be of interest for search:

Rotating interface for active exercising	A63B 21/4049

A61H 2201/1673

Multidimensional rotation

Definition statement

This subgroup covers:
Multiple axis of rotation

A61H 2201/1676

Pivoting

Informative references

Attention is drawn to the following places, which may be of interest for search:

Pivoting interface for active exercising	A63B 21/4047

A61H 2201/1678

Means for angularly oscillating massage elements

Informative references

Attention is drawn to the following places, which may be of interest for search:

Control means	A61H 2201/50

A61H 2201/168

not moving

Informative references

Attention is drawn to the following places, which may be of interest for search:

Active exercising device not moving during use	A63B 21/00047

A61H 2201/1683

Surface of interface

Informative references

Attention is drawn to the following places, which may be of interest for search:

Movement of interface	A61H 2201/1657

A61H 2201/1685

interchangeable (modular devices, A61H 2201/0107)

Informative references

Attention is drawn to the following places, which may be of interest for search:

Modular	A61H 2201/0107

A61H 2201/1688

disposable

Definition statement

This subgroup covers:

e.g. disposable covers for the interface, to treat different users

A61H 2201/169

Physical characteristics of the surface, e.g. material, relief, texture or indicia

Informative references

Attention is drawn to the following places, which may be of interest for search:

Surface characteristics of the treading belt of a treadmill	A63B 22/0285

A61H 2201/1692

Enhanced rubbing effect

Definition statement

This subgroup covers:
e.g. texture

Informative references

Attention is drawn to the following places, which may be of interest for search:

Rubbing or brushing massages	A61H 7/002

A61H 2201/1697

Breathability of the material

Informative references

Attention is drawn to the following places, which may be of interest for search:

Breathability of garments	A41D 2400/22
Breathable absorbent pads	A61F 13/51458

A61H 2201/50

Control means thereof

Informative references

Attention is drawn to the following places, which may be of interest for search:

For active exercising	A63B 24/00

A61H 2201/5002

Means for controlling a set of similar massage devices acting in sequence at different locations on a patient

Informative references

Attention is drawn to the following places, which may be of interest for search:

Intermittent or alternatively inflated bladders or cuffs	A61H 9/0078

A61H 2201/5005

for controlling frequency distribution, modulation or interference of a driving signal

Informative references

Attention is drawn to the following places, which may be of interest for search:

Frequency controlled AC motor	A61H 2201/1223

A61H 2201/5007

computer controlled

Informative references

Attention is drawn to the following places, which may be of interest for search:

Free spatial automatic movement of interface	A61H 2201/1659

A61H 2201/501

connected to external computer devices or networks

Informative references

Attention is drawn to the following places, which may be of interest for search:

Wireless	A61H 2201/5097
With means for remote communication for active exercising	A63B 2225/20
Wireless for active exercising	A63B 2225/50
Maintenance, remote assistance for active exercising	**A63B230/R**

A61H 2201/5012

using the internet

Informative references

Attention is drawn to the following places, which may be of interest for search:

With means for remote communication for active exercising	A63B 2225/20

A61H 2201/5015

using specific interfaces or standards, e.g. USB, serial, parallel

Informative references

Attention is drawn to the following places, which may be of interest for search:

With means for remote communication for active exercising	A63B 2225/20

A61H 2201/5017

Coin operated

Informative references

Attention is drawn to the following places, which may be of interest for search:

Coin operated active exercising devices	A63B 2225/70

A61H 2201/502

Card operated, e.g. pre-paid card, credit card or ID card

Informative references

Attention is drawn to the following places, which may be of interest for search:

Mechanisms actuated by objects other than coins	G07F 7/00

A61H 2201/5023

Interfaces to the user

Definition statement

This subgroup covers:
Control interfaces

References relevant to classification in this group

This subgroup does not cover:

Physical interface with the user	A61H 2201/16

Informative references

Attention is drawn to the following places, which may be of interest for search:

Local control for medical informatics, e.g. GUI	G06F 19/3406

A61H 2201/5025

Activation means

Definition statement

This subgroup covers:
Control activation means

A61H 2201/5028

Contact activation, i.e. activated at contact with a surface of the user to be treated

Informative references

Attention is drawn to the following places, which may be of interest for search:

Limit switches	A61H 2201/5066
Contact switches for active exercise	A63B 2220/801

A61H 2201/503

Inertia activation, i.e. activated by movement

Informative references

Attention is drawn to the following places, which may be of interest for search:

Switches operated by change of acceleration	H01H 35/14

A61H 2201/5033

having a fixed single program

Definition statement

This subgroup covers:
Basic devices having a controlling unit provided with a single program of use

A61H 2201/5035

Several programs selectable

Definition statement

This subgroup covers:
Devices having a controlling unit provided with several programs of use

A61H 2201/5038

freely programmable by the user

Definition statement

This subgroup covers:
Devices having a contrtolling unit programmable by the patient or the therapist

A61H 2201/5041

control is restricted to certain individuals

Informative references

Attention is drawn to the following places, which may be of interest for search:

Means for preventing injuries	A61H 2201/0173

A61H 2201/5043

Displays

References relevant to classification in this group

This subgroup does not cover:

For active exercising	A63B 71/0622

A61H 2201/5046

Touch screens

Informative references

Attention is drawn to the following places, which may be of interest for search:

Control panel with display for surgical instruments	**A61B17/00C5**
Touch screens for games	A63F 2009/241

A61H 2201/5048

Audio interfaces, e.g. voice or music controlled

Informative references

Attention is drawn to the following places, which may be of interest for search:

For active exercising	A63B 71/0622
Speech recognition	G10L 15/00

A61H 2201/5051

hydraulically controlled

Informative references

Attention is drawn to the following places, which may be of interest for search:

Computer controlled	**A61H201/50C**

A61H 2201/5053

mechanically controlled

Informative references

Attention is drawn to the following places, which may be of interest for search:

Computer controlled	**A61H201/50C**

A61H 2201/5056

pneumatically controlled

Definition statement

This subgroup covers:
Also specific pneumatic valves, e.g. mechanically rotated pneumatic valves for distributing air

Informative references

Attention is drawn to the following places, which may be of interest for search:

Computer controlled	**A61H201/50C**

A61H 2201/5058

Sensors or detectors

Definition statement

This subgroup covers:
For the control means

References relevant to classification in this group

This subgroup does not cover:

Sensors for the physical parameters of the user	A61H 2230/00

Informative references

Attention is drawn to the following places, which may be of interest for search:

Arrangement of sensor for diagnostic	A61B 5/68

A61H 2201/5061

Force sensors

Informative references

Attention is drawn to the following places, which may be of interest for search:

For active exercising	A63B 2220/50

A61H 2201/5064

Position sensors

Informative references

Attention is drawn to the following places, which may be of interest for search:

For active exercising	A63B 2220/10

A61H 2201/5066

Limit switches

Informative references

Attention is drawn to the following places, which may be of interest for search:

Relative position sensors for active exercising	A63B 2220/13

A61H 2201/5069

Angle sensors

Informative references

Attention is drawn to the following places, which may be of interest for search:

Angular position sensor for active exercising	A63B 2220/24
Angular speed sensor for active exercising	A63B 2220/34
Angular acceleration sensor for active exercising	A63B 2220/44

A61H 2201/5071

Pressure sensors

Informative references

Attention is drawn to the following places, which may be of interest for search:

For active exercising	A63B 2220/56

A61H 2201/5074

using electric pressure transducers with proportional output

Informative references

Attention is drawn to the following places, which may be of interest for search:

Sensors for measuring force related parameters by electric or magnetic means, for active exercising	A63B 2220/58

A61H 2201/5076

Frequency sensors

Informative references

Attention is drawn to the following places, which may be of interest for search:

For active exercising	A63B 2220/64

A61H 2201/5079

Velocity sensors

Informative references

Attention is drawn to the following places, which may be of interest for search:

For active exercising	A63B 2220/30

A61H 2201/5082

Temperature sensors

Informative references

Attention is drawn to the following places, which may be of interest for search:

For active exercising	A63B 2220/72

A61H 2201/5084

Acceleration sensors

Informative references

Attention is drawn to the following places, which may be of interest for search:

For active exercising	A63B 2220/40

A61H 2201/5087

Flow rate sensors

Informative references

Attention is drawn to the following places, which may be of interest for search:

Hydraulic massage	A61H 9/0021
Hydraulic or pneumatic drive	A61H 2201/1238

A61H 2201/5089

Gas sensors, e.g. for oxygen or CO_2

Informative references

Attention is drawn to the following places, which may be of interest for search:

Pneumatic massage	A61H 9/005
Hydraulic or pneumatic drive	A61H 2201/1238

A61H 2201/5092

Optical sensor

Informative references

Attention is drawn to the following places, which may be of interest for search:

For active exercising	A63B 2220/805

A61H 2201/5094

with patient markers

Informative references

Attention is drawn to the following places, which may be of interest for search:

Image processing for measuring for active exercising	A63B 2220/05
Sensors on the body of the user for active exercising	A63B 2220/836

A61H 2201/5097

wireless

Informative references

Attention is drawn to the following places, which may be of interest for search:

Bathing or washing devices using remote control signals	A61H 2033/0079
With means for remote communication for active exercising	A63B 2225/20
Wireless for active exercising	A63B 2225/50
Maintenance, remote assistance for active exercising	**A63B230/R**

A61H 2203/00

Additional characteristics concerning the patient

Definition statement

This group covers:

Classes which are used for specifying the details concerning the patient not defined in the preceding scheme

A61H 2203/02

immersed in liquid

References relevant to classification in this group

This subgroup does not cover:

Body floating supports for relaxation in water	A61H 37/005

Informative references

Attention is drawn to the following places, which may be of interest for search:

Device used in water	**A61H201/01E**
Device used in water for active exercising	A63B 2225/60
user immersed in water for active exercising	A63B 2208/03

A61H 2203/03

especially adapted for animals

Informative references

Attention is drawn to the following places, which may be of interest for search:

for active exercising	A63B 2208/14

A61H 2203/04

Position of the patient

Informative references

Attention is drawn to the following places, which may be of interest for search:

for active exercising	A63B 2208/02

A61H 2203/0406

Standing on the feet

Informative references

Attention is drawn to the following places, which may be of interest for search:

for active exercising	**A63B208/02B**

A61H 2203/0412

Kneeling

Informative references

Attention is drawn to the following places, which may be of interest for search:

for active exercising	**A63B208/02C**

A61H 2203/0418

Squatting, i.e. sitting on the heels

Informative references

Attention is drawn to the following places, which may be of interest for search:

for active exercising	**A63B208/02D**

A61H 2203/0425

Sitting on the buttocks

Informative references

Attention is drawn to the following places, which may be of interest for search:

for active exercising	**A63B208/02E**

A61H 2203/0431

in 90°/90°-position, like on a chair

Informative references

Attention is drawn to the following places, which may be of interest for search:

for active exercising	**A63B208/02E2**

A61H 2203/0437

with stretched legs, like in a bed

Informative references

Attention is drawn to the following places, which may be of interest for search:

for active exercising	A63B 2208/0238

A61H 2203/0443

substantially horizontal

Informative references

Attention is drawn to the following places, which may be of interest for search:

for active exercising	**A63B208/02F**

A61H 2203/045

with legs in a kneeled 90°/90°-position

Informative references

Attention is drawn to the following places, which may be of interest for search:

for active exercising	**A63B208/02F1**

A61H 2203/0456

Supine

Informative references

Attention is drawn to the following places, which may be of interest for search:

for active exercising	**A63B208/02F2**

A61H 2203/0462

with legs stretched and hips in 90°-position

Definition statement

This subgroup covers:
Torso being substantially horizontal and the legs being perpendicular to the torso

A61H 2203/0468

Prone

Informative references

Attention is drawn to the following places, which may be of interest for search:

for active exercising	**A63B208/02F4**

A61H 2203/0475

on the side

Informative references

Attention is drawn to the following places, which may be of interest for search:

for active exercising	**A63B208/02F6**

A61H 2203/0481

Hanging

Informative references

Attention is drawn to the following places, which may be of interest for search:

for active exercising	**A63B208/02L**

A61H 2203/0487

upright

Informative references

Attention is drawn to the following places, which may be of interest for search:

for active exercising	**A63B208/02L2**

A61H 2203/0493

by hanging the patient upside down or inclined downwardly

Informative references

Attention is drawn to the following places, which may be of interest for search:

Drawing-out devices	A61H 1/0218

A61H 2205/00

Devices for specific parts of the body (A61H 1/02, A61H 13/00, A61H 19/00, A61H 21/00, A61H 35/00 take precedence)

References relevant to classification in this group

This group does not cover:

Stretching or bending specific body parts	A61H 1/02
Gum massage	A61H 13/00
Massage of the genitals	A61H 19/00
Massage devices for cavities of the body (nose, ears, anus)	A61H 21/00
Bath for specific body parts	A61H 35/00

Special rules of classification within this group

Part of the body interfaced with the device to be classified in A61H 2201/1602

A61H 2205/02

Head

Informative references

Attention is drawn to the following places, which may be of interest for search:

Bath therefore	A61H 35/008
Support for the head	**A61H201/16A2**

A61H 2205/021

Scalp

Informative references

Attention is drawn to the following places, which may be of interest for search:

Support for the head	**A61H201/16A2**
Preparations for care of the skin	A61Q 19/00

A61H 2205/022

Face

Informative references

Attention is drawn to the following places, which may be of interest for search:

Support for the head	**A61H201/16A2**

A61H 2205/023

Nose

Informative references

Attention is drawn to the following places, which may be of interest for search:

Bath therefore	A61H 35/04
Support for the head	**A61H201/16A2**

A61H 2205/024

Eyes

Informative references

Attention is drawn to the following places, which may be of interest for search:

Bath therefore	A61H 35/02
Support for the head	**A61H201/16A2**

A61H 2205/025

Forehead

Informative references

Attention is drawn to the following places, which may be of interest for search:

Support for the head	**A61H201/16A2**

A61H 2205/026

Mandible

Informative references

Attention is drawn to the following places, which may be of interest for search:

Support for the head	A61H 2201/1604

A61H 2205/027

Ears

Informative references

Attention is drawn to the following places, which may be of interest for search:

Support for the head	A61H 2201/1604

A61H 2205/028

Temples

Informative references

Attention is drawn to the following places, which may be of interest for search:

Support for the head	A61H 2201/1604

A61H 2205/04

neck

Informative references

Attention is drawn to the following places, which may be of interest for search:

Support for the neck	A61H 2201/1609

A61H 2205/06

Arms

Informative references

Attention is drawn to the following places, which may be of interest for search:

Support for the arm or hand	A61H 2201/1635

A61H 2205/062

Shoulders

Informative references

Attention is drawn to the following places, which may be of interest for search:

Support for the shoulders	A61H 2201/1614

A61H 2205/065

Hands

Informative references

Attention is drawn to the following places, which may be of interest for search:

Support for the arm or hand	A61H 2201/1635

A61H 2205/067

Fingers

Informative references

Attention is drawn to the following places, which may be of interest for search:

Support for the arm or hand	A61H 2201/1635

A61H 2205/08

Trunk

Informative references

Attention is drawn to the following places, which may be of interest for search:

Support for the thorax	**A61H201/16A8**

A61H 2205/081

Back

Informative references

Attention is drawn to the following places, which may be of interest for search:

Support for the back	A61H 2201/1623

A61H 2205/082

Breasts

Informative references

Attention is drawn to the following places, which may be of interest for search:

Bath therefore	A61H 35/002
Support for the thorax	**A61H201/16A8**

A61H 2205/083

Abdomen

Informative references

Attention is drawn to the following places, which may be of interest for search:

Support for the thorax	**A61H201/16A8**

A61H 2205/084

Chest

Informative references

Attention is drawn to the following places, which may be of interest for search:

Support for the thorax	**A61H201/16A8**

A61H 2205/085

Crotch

Informative references

Attention is drawn to the following places, which may be of interest for search:

Support for the pelvis	A61H 2201/1628

A61H 2205/086

Buttocks

Informative references

Attention is drawn to the following places, which may be of interest for search:

Support for the pelvis	A61H 2201/1628

A61H 2205/087

Genitals

References relevant to classification in this group

This subgroup does not cover:

Massage for the genitals	A61H 19/00

Informative references

Attention is drawn to the following places, which may be of interest for search:

Support for the pelvis	A61H 2201/1628

A61H 2205/088

Hip

Informative references

Attention is drawn to the following places, which may be of interest for search:

Support for the pelvis	A61H 2201/1628

A61H 2205/10

Leg

Informative references

Attention is drawn to the following places, which may be of interest for search:

Support for the feet or leg	A61H 2201/164

A61H 2205/102

Knee

Informative references

Attention is drawn to the following places, which may be of interest for search:

Support for the feet or leg	A61H 2201/164

A61H 2205/104

Patella

Informative references

Attention is drawn to the following places, which may be of interest for search:

Support for the feet or leg	A61H 2201/164

A61H 2205/106

for the lower legs

Informative references

Attention is drawn to the following places, which may be of interest for search:

Support for the feet or leg	A61H 2201/164

A61H 2205/108

for the upper legs

Informative references

Attention is drawn to the following places, which may be of interest for search:

Support for the feet or leg	A61H 2201/164

A61H 2205/12

Feet

Informative references

Attention is drawn to the following places, which may be of interest for search:

Bath therefore	A61H 35/006
Support for the feet or leg	A61H 2201/164

A61H 2205/125

Foot reflex zones

Informative references

Attention is drawn to the following places, which may be of interest for search:

Devices for locating or stimulating specific reflex points	A61H 39/00
Support for the feet or leg	A61H 2201/164

A61H 2207/00

Anti-cellulite devices

Informative references

Attention is drawn to the following places, which may be of interest for search:

Specific parts of the body to be treated	A61H 2205/00

A61H 2209/00

Devices for avoiding blood stagnation, e.g. Deep Vein Thrombosis [DVT] devices

Informative references

Attention is drawn to the following places, which may be of interest for search:

Active exercises therefore	A63B 2022/0097

Flowcharts

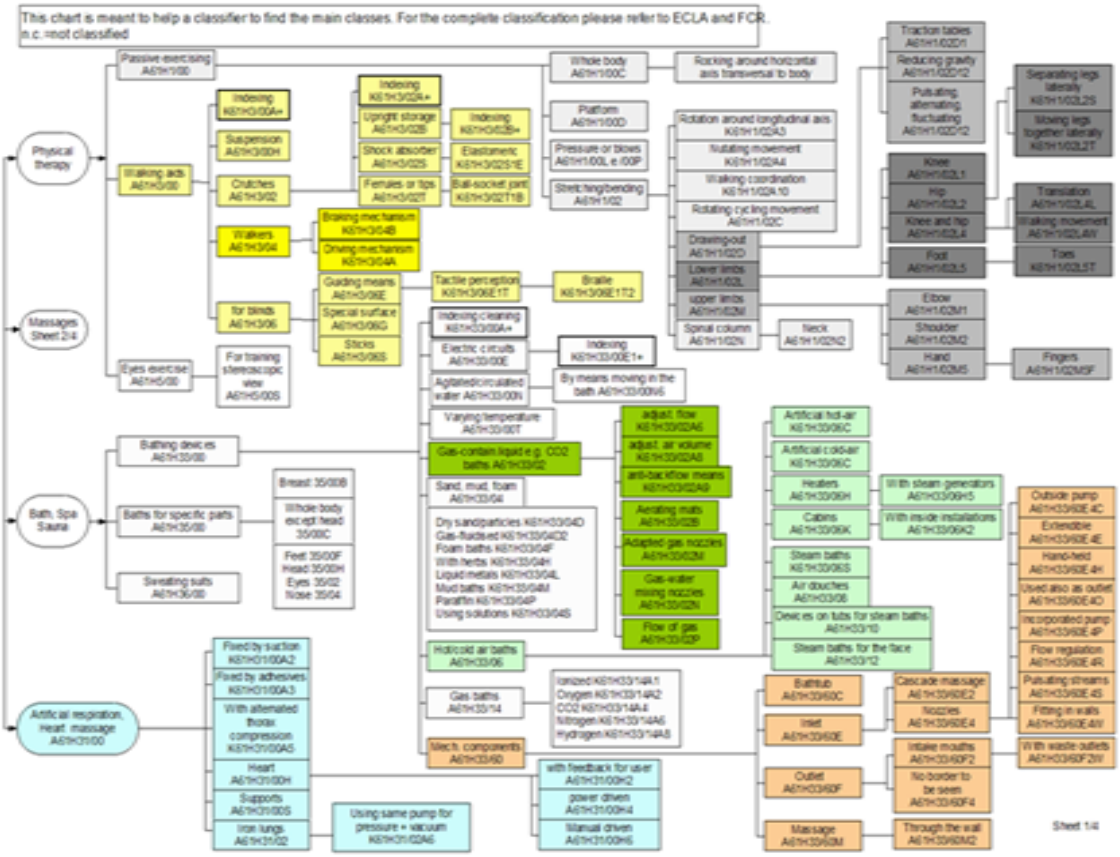
This chart is meant to help a classifier to find the main classes. For the complete classification please refer to ECLA and FCR.
n.c.=not classified
Physical therapy
Massages Sheet 2/4
Bath, Spa Sauna
Artificial respiration, Heart massage A61H31/00
Passive-exercising A61H1/00
Walking aids A61H3/00
Eyes exercise A61H5/00
For training stereoscopic view A61H5/005
Indexing A61H3/00A+
Suspension A61H3/00H
Crutches A61H3/02
Walkers A61H3/04
Braking mechanism A61H3/04B
Driving mechanism A61H3/04A
for blinds A61H3/06
Guiding means A61H3/06E
Special surface A61H3/06G
Sticks A61H3/06S
Indexing A61H3/02A+
Upright storage A61H3/02B
Shock absorber A61H3/02S
Ferrules or tips A61H3/02T
Indexing A61H3/02B+
Elastomeric A61H3/02S1E
Ball-socket joint A61H3/02T1B
Tactile perception A61H3/06E1T
Braille A61H3/06E1T2
Bathing devices A61H33/00
Baths for specific parts A61H35/00
Breast 35/00B
Whole body except head 35/00C
Feet 35/00F
Head 35/00H
Eyes 35/02
Nose 35/04
Sweating suits A61H36/00
Indexing cleaning A61H33/00A+
Electric circuits A61H33/00E
Indexing A61H33/00E1+
Agitated/circulated water A61H33/00N
By means moving in the bath A61H33/00N6
Varying temperature A61H33/00T
Gas-contain.liquid e.g. CO2 baths A61H33/02
adjust. flow A61H33/02A6
adjust. air volume A61H33/02A8
anti-backflow means A61H33/02A9
Aerating mats A61H33/02B
Adapted gas nozzles A61H33/02M
Gas-water mixing nozzles A61H33/02N
Flow of gas A61H33/02P
Sand, mud, foam A61H33/04
Dry sand/particles A61H33/04D
Gas-fluidized A61H33/04D2
Foam baths A61H33/04F
With herbs A61H33/04H
Liquid metals A61H33/04L
Mud baths A61H33/04M
Paraffin A61H33/04P
Using solutions A61H33/04S
Hot/cold air baths A61H33/06
Gas baths A61H33/14
Ionized A61H33/14A1
Oxygen A61H33/14A2
CO2 A61H33/14A4
Nitrogen A61H33/14A6
Hydrogen A61H33/14A8
Mech. components A61H33/60
Fixed by suction A61H31/00A2
Fixed by adhesives A61H31/00A3
With alternated thorax compression A61H31/00A5
Heart A61H31/00H
Supports A61H31/00S
Iron lungs A61H31/02
Using same pump for pressure + vacuum A61H31/02A6
with feedback for user A61H31/00H2
power driven A61H31/00H4
Manual driven A61H31/00H6
Whole body A61H1/00C
Rocking around horizontal axis transversal to body
Platform A61H1/00D
Pressure or blows A61H1/00L e /00P
Stretching/bending A61H1/02
Rotation around longitudinal axis A61H1/02A3
Nutating movement A61H1/02A4
Walking coordination A61H1/02A10
Rotating/cycling movement A61H1/02C
Drawing-out A61H1/02D
Lower limbs A61H1/02L
upper limbs A61H1/02M
Spinal column A61H1/02N
Neck A61H1/02N2
Traction tables A61H1/02D1
Reducing gravity A61H1/02D1/2
Pulsating, alternating, fluctuating A61H1/02D1/2
Separating legs laterally A61H1/02L2S
Moving legs together laterally A61H1/02L2T
Knee A61H1/02L1
Hip A61H1/02L2
Knee and hip A61H1/02L4
Translation A61H1/02L4L
Walking movement A61H1/02L4W
Foot A61H1/02L5
Toes A61H1/02L5T
Elbow A61H1/02M1
Shoulder A61H1/02M2
Hand A61H1/02M5
Fingers A61H1/02M5F
Artificial hot-air A61H33/06C
Artificial cold-air A61H33/06C
Heaters A61H33/06H
With steam-generators A61H33/06H5
Cabins A61H33/06K
With inside installations A61H33/06K2
Steam baths A61H33/06S
Air douches A61H33/08
Devices on tubs for steam baths A61H33/10
Steam baths for the face A61H33/12
Bathtub A61H33/60C
Inlet A61H33/60E
Cascade massage A61H33/60E2
Nozzles A61H33/60E4
Outlet A61H33/60F
Intake mouths A61H33/60F2
No-border to be seen A61H33/60F4
Massage A61H33/60M
Through the wall A61H33/60M2
Outside pump A61H33/60E4C
Extendible A61H33/60E4E
Hand-held A61H33/60E4H
Used also as outlet A61H33/60E4O
Incorporated pump A61H33/60E4P
Flow regulation A61H33/60E4R
Pulsating streams A61H33/60E4S
Fitting in walls A61H33/60E4W
With waste outlets A61H33/60F2W
Sheet 1/4

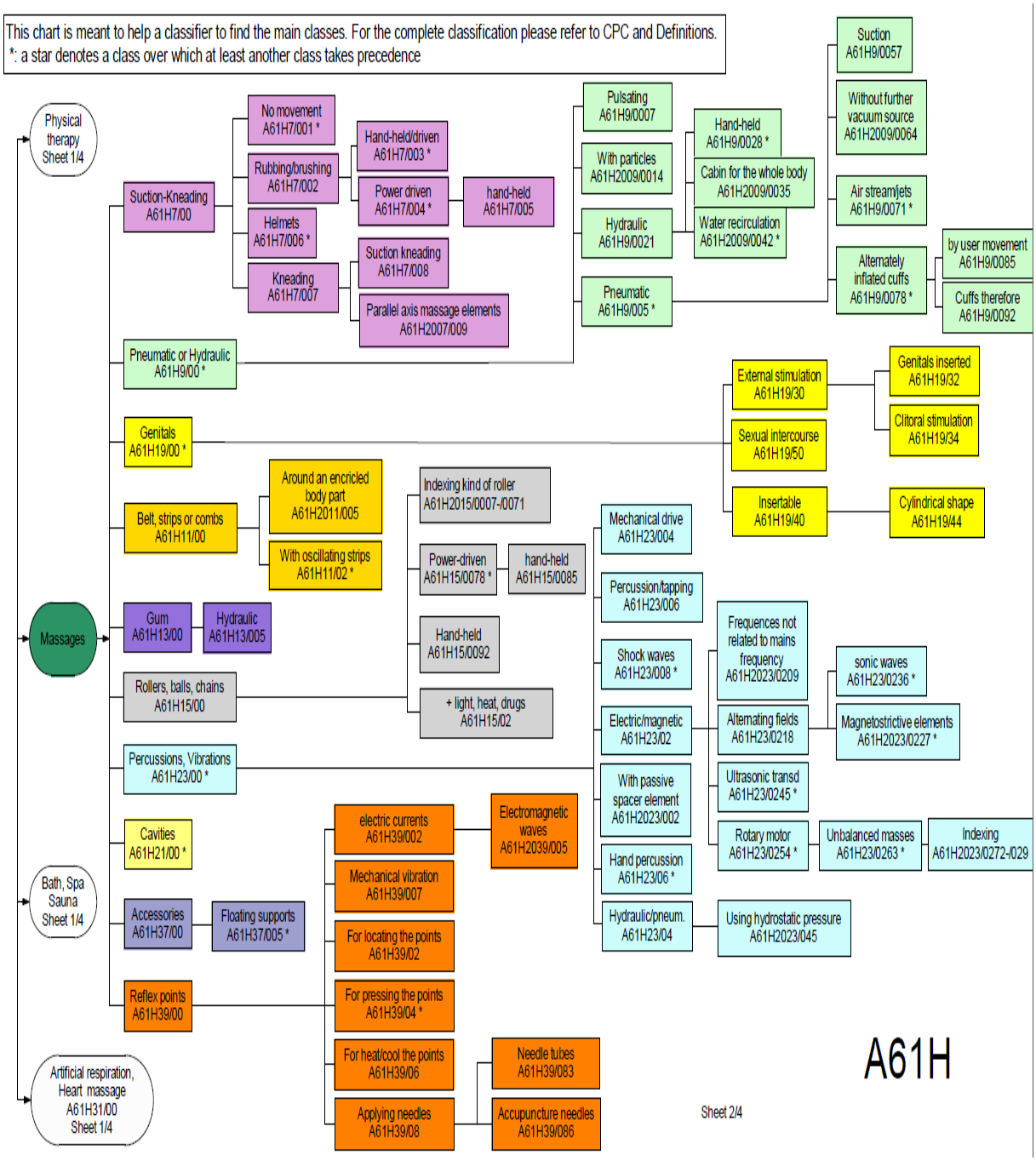
This chart is meant to help a classifier to find the main classes. For the complete classification please refer to CPC and Definitions.
*: a star denotes a class over which at least another class takes precedence
Physical therapy Sheet 1/4
Massages
Bath, Spa Sauna Sheet 1/4
Artificial respiration, Heart massage A61H31/00 Sheet 1/4
Suction-Kneading A61H7/00
No movement A61H7/001 *
Rubbing/brushing A61H7/002
Helmets A61H7/006 *
Kneading A61H7/007
Hand-held/driven A61H7/003 *
Power driven A61H7/004 *
hand-held A61H7/005
Suction kneading A61H7/008
Parallel axis massage elements A61H2007/009
Pneumatic or Hydraulic A61H9/00 *
Pulsating A61H9/0007
With particles A61H2009/0014
Hydraulic A61H9/0021
Pneumatic A61H9/005 *
Hand-held A61H9/0028 *
Cabin for the whole body A61H2009/0035
Water recirculation A61H2009/0042 *
Suction A61H9/0057
Without further vacuum source A61H2009/0064
Air streamjets A61H9/0071 *
Alternately inflated cuffs A61H9/0078 *
by user movement A61H9/0085
Cuffs therefore A61H9/0092
Genitals A61H19/00 *
External stimulation A61H19/30
Sexual intercourse A61H19/50
Insertable A61H19/40
Genitals inserted A61H19/32
Clitoral stimulation A61H19/34
Cylindrical shape A61H19/44
Belt, strips or combs A61H11/00
Around an encricled body part A61H2011/005
With oscillating strips A61H11/02 *
Gum A61H13/00
Hydraulic A61H13/005
Rollers, balls, chains A61H15/00
Indexing kind of roller A61H2015/0007-/0071
Power-driven A61H15/0078 *
hand-held A61H15/0085
Hand-held A61H15/0092
+ light, heat, drugs A61H15/02
Percussions, Vibrations A61H23/00 *
Mechanical drive A61H23/004
Percussion/tapping A61H23/006
Shock waves A61H23/008 *
Electric/magnetic A61H23/02
With passive spacer element A61H2023/002
Hand percussion A61H23/06 *
Hydraulic/pneum. A61H23/04
Frequences not related to mains frequency A61H2023/0209
Alternating fields A61H23/0218
Ultrasonic transd A61H23/0245 *
Rotary motor A61H23/0254 *
sonic waves A61H23/0236 *
Magnetostrictive elements A61H2023/0227 *
Unbalanced masses A61H23/0263 *
Indexing A61H2023/0272-/029
Using hydrostatic pressure A61H2023/045
Cavities A61H21/00 *
Accessories A61H37/00
Floating supports A61H37/005 *
Reflex points A61H39/00
electric currents A61H39/002
Electromagnetic waves A61H2039/005
Mechanical vibration A61H39/007
For locating the points A61H39/02
For pressing the points A61H39/04 *
For heat/cool the points A61H39/06
Applying needles A61H39/08
Needle tubes A61H39/083
Accupuncture needles A61H39/086
A61H
Sheet 2/4

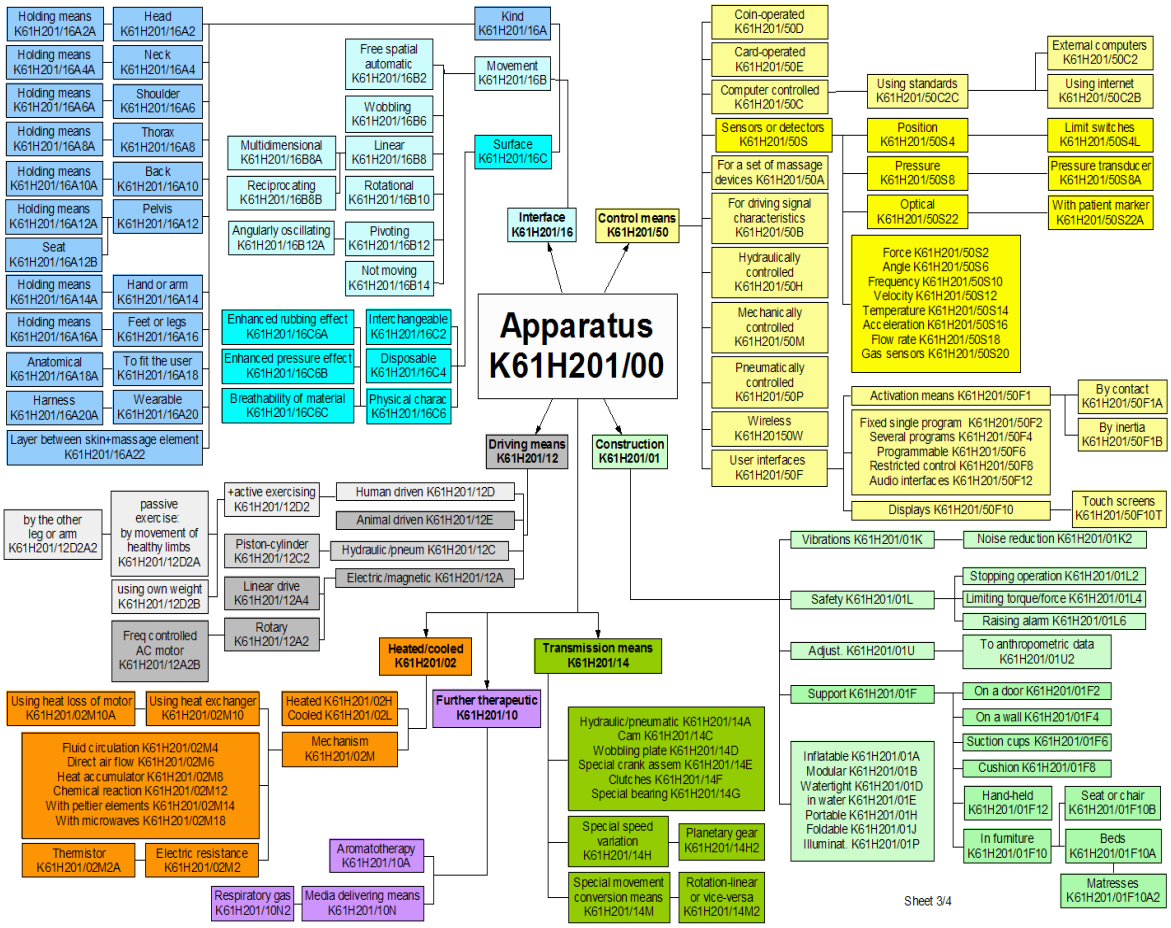
Apparatus K61H201/00
Interface K61H201/16
Control means K61H201/50
Driving means K61H201/12
Construction K61H201/01
Kind K61H201/16A
Movement K61H201/16B
Surface K61H201/16C
Holding means K61H201/16A2
Head K61H201/16A2
Holding means K61H201/16A4A
Neck K61H201/16A4
Holding means K61H201/16A6A
Shoulder K61H201/16A6
Holding means K61H201/16A8A
Thorax K61H201/16A8
Holding means K61H201/16A10A
Back K61H201/16A10
Holding means K61H201/16A12A
Pelvis K61H201/16A12
Seat K61H201/16A12B
Holding means K61H201/16A14A
Hand or arm K61H201/16A14
Holding means K61H201/16A16A
Feet or legs K61H201/16A16
Anatomical K61H201/16A18A
To fit the user K61H201/16A18
Harness K61H201/16A20A
Wearable K61H201/16A20
Layer between skin+massage element K61H201/16A22
Free spatial automatic K61H201/16B2
Wobbling K61H201/16B6
Multidimensional K61H201/16B8A
Linear K61H201/16B8
Reciprocating K61H201/16B8B
Rotational K61H201/16B10
Angularly oscillating K61H201/16B12A
Pivoting K61H201/16B12
Not moving K61H201/16B14
Enhanced rubbing effect K61H201/16C6A
Interchangeable K61H201/16C2
Enhanced pressure effect K61H201/16C6B
Disposable K61H201/16C4
Breathability of material K61H201/16C6C
Physical charac K61H201/16C6
Coin-operated K61H201/50D
Card-operated K61H201/50E
Computer controlled K61H201/50C
Using standards K61H201/50C2C
External computers K61H201/50C2
Using internet K61H201/50C2B
Sensors or detectors K61H201/50S
Position K61H201/50S4
Limit switches K61H201/50S4L
Pressure K61H201/50S8
Pressure transducer K61H201/50S8A
Optical K61H201/50S22
With patient marker K61H201/50S22A
Force K61H201/50S2
Angle K61H201/50S6
Frequency K61H201/50S10
Velocity K61H201/50S12
Temperature K61H201/50S14
Acceleration K61H201/50S16
Flow rate K61H201/50S18
Gas sensors K61H201/50S20
For a set of massage devices K61H201/50A
For driving signal characteristics K61H201/50B
Hydraulically controlled K61H201/50H
Mechanically controlled K61H201/50M
Pneumatically controlled K61H201/50P
Wireless K61H20150W
User interfaces K61H201/50F
Activation means K61H201/50F1
By contact K61H201/50F1A
By inertia K61H201/50F1B
Fixed single program K61H201/50F2
Several programs K61H201/50F4
Programmable K61H201/50F6
Restricted control K61H201/50F8
Audio interfaces K61H201/50F12
Displays K61H201/50F10
Touch screens K61H201/50F10T
by the other leg or arm K61H201/12D2A2
passive exercise: by movement of healthy limbs K61H201/12D2A
using own weight K61H201/12D2B
+active exercising K61H201/12D2
Human driven K61H201/12D
Animal driven K61H201/12E
Piston-cylinder K61H201/12C2
Hydraulic/pneum K61H201/12C
Linear drive K61H201/12A4
Electric/magnetic K61H201/12A
Freq controlled AC motor K61H201/12A2B
Rotary K61H201/12A2
Vibrations K61H201/01K
Noise reduction K61H201/01K2
Safety K61H201/01L
Stopping operation K61H201/01L2
Limiting torque/force K61H201/01L4
Raising alarm K61H201/01L6
Adjust. K61H201/01U
To anthropometric data K61H201/01U2
Support K61H201/01F
On a door K61H201/01F2
On a wall K61H201/01F4
Suction cups K61H201/01F6
Cushion K61H201/01F8
Hand-held K61H201/01F12
Seat or chair K61H201/01F10B
In furniture K61H201/01F10
Beds K61H201/01F10A
Matresses K61H201/01F10A2
Inflatable K61H201/01A
Modular K61H201/01B
Watertight K61H201/01D
in water K61H201/01E
Portable K61H201/01H
Foldable K61H201/01J
Illuminat. K61H201/01P
Heated/cooled K61H201/02
Further therapeutic K61H201/10
Transmission means K61H201/14
Using heat loss of motor K61H201/02M10A
Using heat exchanger K61H201/02M10
Heated K61H201/02H
Cooled K61H201/02L
Mechanism K61H201/02M
Fluid circulation K61H201/02M4
Direct air flow K61H201/02M6
Heat accumulator K61H201/02M8
Chemical reaction K61H201/02M12
With peltier elements K61H201/02M14
With microwaves K61H201/02M18
Thermistor K61H201/02M2A
Electric resistance K61H201/02M2
Aromatotherapy K61H201/10A
Respiratory gas K61H201/10N2
Media delivering means K61H201/10N
Hydraulic/pneumatic K61H201/14A
Cam K61H201/14C
Wobbling plate K61H201/14D
Special crank assem K61H201/14E
Clutches K61H201/14F
Special bearing K61H201/14G
Special speed variation K61H201/14H
Planetary gear K61H201/14H2
Special movement conversion means K61H201/14M
Rotation-linear or vice-versa K61H201/14M2
Sheet 3/4

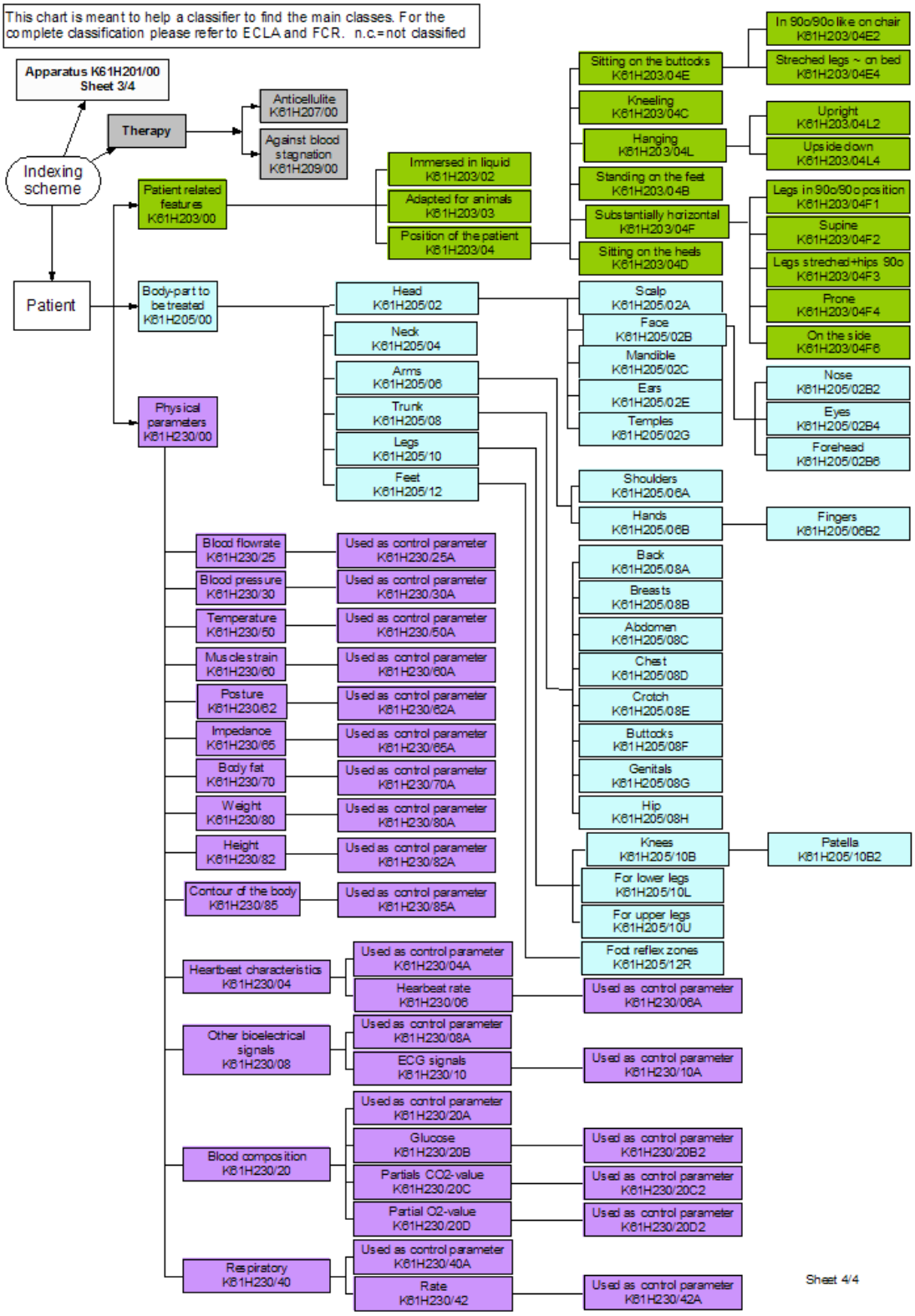
This chart is meant to help a classifier to find the main classes. For the complete classification please refer to ECLA and FCR. n.c.=not classified
Apparatus K61H201/00 Sheet 3/4
Indexing scheme
Therapy
Anticellulite K61H207/00
Against blood stagnation K61H209/00
Patient
Patient related features K61H203/00
Immersed in liquid K61H203/02
Adapted for animals K61H203/03
Position of the patient K61H203/04
Sitting on the buttocks K61H203/04E
In 90o/90o like on chair K61H203/04E2
Streched legs ~ on bed K61H203/04E4
Kneeling K61H203/04C
Hanging K61H203/04L
Upright K61H203/04L2
Upside down K61H203/04L4
Standing on the feet K61H203/04B
Substantially horizontal K61H203/04F
Legs in 90o/90o position K61H203/04F1
Supine K61H203/04F2
Legs streched+hips 90o K61H203/04F3
Prone K61H203/04F4
On the side K61H203/04F6
Sitting on the heels K61H203/04D
Body-part to be treated K61H205/00
Head K61H205/02
Neck K61H205/04
Arms K61H205/06
Trunk K61H205/08
Legs K61H205/10
Feet K61H205/12
Scalp K61H205/02A
Face K61H205/02B
Mandible K61H205/02C
Ears K61H205/02E
Temples K61H205/02G
Nose K61H205/02B2
Eyes K61H205/02B4
Forehead K61H205/02B6
Shoulders K61H205/06A
Hands K61H205/06B
Fingers K61H205/06B2
Back K61H205/08A
Breasts K61H205/08B
Abdomen K61H205/08C
Chest K61H205/08D
Crotch K61H205/08E
Buttocks K61H205/08F
Genitals K61H205/08G
Hip K61H205/08H
Knees K61H205/10B
Patella K61H205/10B2
For lower legs K61H205/10L
For upper legs K61H205/10U
Foot reflex zones K61H205/12R
Physical parameters K61H230/00
Blood flowrate K61H230/25
Used as control parameter K61H230/25A
Blood pressure K61H230/30
Used as control parameter K61H230/30A
Temperature K61H230/50
Used as control parameter K61H230/50A
Muscle strain K61H230/60
Used as control parameter K61H230/60A
Posture K61H230/62
Used as control parameter K61H230/62A
Impedance K61H230/65
Used as control parameter K61H230/65A
Body fat K61H230/70
Used as control parameter K61H230/70A
Weight K61H230/80
Used as control parameter K61H230/80A
Height K61H230/82
Used as control parameter K61H230/82A
Contour of the body K61H230/85
Used as control parameter K61H230/85A
Heartbeat characteristics K61H230/04
Used as control parameter K61H230/04A
Hearbeat rate K61H230/06
Used as control parameter K61H230/06A
Other bioelectrical signals K61H230/08
Used as control parameter K61H230/08A
ECG signals K61H230/10
Used as control parameter K61H230/10A
Blood composition K61H230/20
Used as control parameter K61H230/20A
Glucose K61H230/20B
Used as control parameter K61H230/20B2
Partials CO2-value K61H230/20C
Used as control parameter K61H230/20C2
Partial O2-value K61H230/20D
Used as control parameter K61H230/20D2
Respiratory K61H230/40
Used as control parameter K61H230/40A
Rate K61H230/42
Used as control parameter K61H230/42A
Sheet 4/4

A61H 2230/00

Measuring physical parameters of the user

Informative references

Attention is drawn to the following places, which may be of interest for search:

For active exercising	A63B 2230/00

A61H 2230/04

Heartbeat characteristics, e.g. E.G.C., blood pressure modulation

Informative references

Attention is drawn to the following places, which may be of interest for search:

Measuring blood flow parameters	A61B 5/02
For active exercising	A63B 2230/04

A61H 2230/045

used as a control parameter for the apparatus

Informative references

Attention is drawn to the following places, which may be of interest for search:

For active exercising	A63B 2230/045

A61H 2230/06

Heartbeat rate

Informative references

Attention is drawn to the following places, which may be of interest for search:

Measuring pulse rate or heart rate	A61B 5/024
For active exercising	A63B 2230/06

A61H 2230/065

used as a control parameter for the apparatus

Informative references

Attention is drawn to the following places, which may be of interest for search:

For active exercising	A63B 2230/062

A61H 2230/08

Other bio-electrical signals

Informative references

Attention is drawn to the following places, which may be of interest for search:

For active exercising	A63B 2230/08

A61H 2230/085

used as a control parameter for the apparatus

Informative references

Attention is drawn to the following places, which may be of interest for search:

For active exercising	A63B 2230/085

A61H 2230/10

Electroencephalographic signals

Informative references

Attention is drawn to the following places, which may be of interest for search:

For active exercising	A63B 2230/10

A61H 2230/105

used as a control parameter for the apparatus

Informative references

Attention is drawn to the following places, which may be of interest for search:

For active exercising	A63B 2230/105

A61H 2230/20

Blood composition characteristics

Informative references

Attention is drawn to the following places, which may be of interest for search:

For active exercising	A63B 2230/20

A61H 2230/201

used as a control parameter for the apparatus

Informative references

Attention is drawn to the following places, which may be of interest for search:

For active exercising	A63B 2230/201

A61H 2230/202

Glucose

Informative references

Attention is drawn to the following places, which may be of interest for search:

For active exercising	A63B 2230/202

A61H 2230/203

used as a control parameter for the apparatus

Informative references

Attention is drawn to the following places, which may be of interest for search:

For active exercising	A63B 2230/203

A61H 2230/205

partial CO_2-value

Informative references

Attention is drawn to the following places, which may be of interest for search:

For active exercising	A63B 2230/205

A61H 2230/206

used as a control parameter for the apparatus

Informative references

Attention is drawn to the following places, which may be of interest for search:

For active exercising	A63B 2230/206

A61H 2230/207

partial O_2-value

Informative references

Attention is drawn to the following places, which may be of interest for search:

For active exercising	A63B 2230/207

A61H 2230/208

used as a control parameter for the apparatus

Informative references

Attention is drawn to the following places, which may be of interest for search:

For active exercising	A63B 2230/208

A61H 2230/25

Blood flowrate, e.g. by Doppler effect

Informative references

Attention is drawn to the following places, which may be of interest for search:

Measuring blood flow	A61B 5/026
Measuring blood composition for active exercising	A63B 2230/20

A61H 2230/255

used as a control parameter for the apparatus

Informative references

Attention is drawn to the following places, which may be of interest for search:

Measuring blood composition for active exercising	A63B 2230/201

A61H 2230/30

Blood pressure (A61H 2230/04 takes precedence)

Informative references

Attention is drawn to the following places, which may be of interest for search:

Measuring blood pressures	A61B 5/021
For active exercising	A63B 2230/30

A61H 2230/305

used as a control parameter for the apparatus (A61H 2230/045 takes precedence)

Informative references

Attention is drawn to the following places, which may be of interest for search:

For active exercising	A63B 2230/305

A61H 2230/40

Respiratory characteristics

Informative references

Attention is drawn to the following places, which may be of interest for search:

For active exercising	A63B 2230/40

A61H 2230/405

used as a control parameter for the apparatus

Informative references

Attention is drawn to the following places, which may be of interest for search:

For active exercising	A63B 2230/405

A61H 2230/42

Rate

Informative references

Attention is drawn to the following places, which may be of interest for search:

For active exercising	A63B 2230/42

A61H 2230/425

used as a control parameter for the apparatus

Informative references

Attention is drawn to the following places, which may be of interest for search:

For active exercising	A63B 2230/425

A61H 2230/50

Temperature

Informative references

Attention is drawn to the following places, which may be of interest for search:

For active exercising	A63B 2230/50

A61H 2230/505

used as a control parameter for the apparatus

Informative references

Attention is drawn to the following places, which may be of interest for search:

For active exercising	A63B 2230/505

A61H 2230/60

Muscle strain, i.e. measured on the user, e.g. Electromyography [EMG]

Definition statement

This subgroup covers:
muscle activity

Informative references

Attention is drawn to the following places, which may be of interest for search:

For active exercising	A63B 2230/60

A61H 2230/605

used as a control parameter for the apparatus

Informative references

Attention is drawn to the following places, which may be of interest for search:

For active exercising	A63B 2230/605

A61H 2230/62

Posture

Informative references

Attention is drawn to the following places, which may be of interest for search:

For active exercising	A63B 2230/62

A61H 2230/625

used as a control parameter for the apparatus

Informative references

Attention is drawn to the following places, which may be of interest for search:

For active exercising	A63B 2230/625

A61H 2230/65

Impedance, e.g. skin conductivity; capacitance, e.g. galvanic skin response [GSR]

Informative references

Attention is drawn to the following places, which may be of interest for search:

For active exercising	A63B 2230/65

A61H 2230/655

used as a control parameter for the apparatus

Informative references

Attention is drawn to the following places, which may be of interest for search:

For active exercising	A63B 2230/655

A61H 2230/70

Body fat

Informative references

Attention is drawn to the following places, which may be of interest for search:

For active exercising	A63B 2230/70

A61H 2230/705

used as a control parameter for the apparatus

Informative references

Attention is drawn to the following places, which may be of interest for search:

For active exercising	A63B 2230/705

A61H 2230/80

Weight

Informative references

Attention is drawn to the following places, which may be of interest for search:

For active exercising	A63B 2230/01

A61H 2230/805

used as a control parameter for the apparatus

Informative references

Attention is drawn to the following places, which may be of interest for search:

For active exercising	A63B 2230/015

A61H 2230/82

Height, e.g. length

Informative references

Attention is drawn to the following places, which may be of interest for search:

Setting of device automatically adjusted according to anthropometric data of the user	A61H 2201/0196

A61H 2230/825

used as a control parameter for the apparatus

Informative references

Attention is drawn to the following places, which may be of interest for search:

Setting of device automatically adjusted according to anthropometric data of the user	A61H 2201/0196

A61H 2230/85

Contour of the body

Informative references

Attention is drawn to the following places, which may be of interest for search:

Setting of device automatically adjusted according to anthropometric data of the user	A61H 2201/0196
Contoured to fit the user	A61H 2201/1645

A61H 2230/855

used as a control parameter for the apparatus

Informative references

Attention is drawn to the following places, which may be of interest for search:

Setting of device automatically adjusted according to anthropometric data of the user	A61H 2201/0196