A01F

PROCESSING OF HARVESTED PRODUCE; HAY OR STRAW PRESSES; DEVICES FOR STORING AGRICULTURAL OR HORTICULTURAL PRODUCE (devices for topping or skinning onions or flower bulbs A23N 15/08)

Definition statement

This subclass covers:

The scope of this subclass is composed of five separate parts, relating to the five parts of the subclass title. For ease of reference each section of these definitions is separated under five corresponding simplified headings: "Threshing", "Baling", "Bundling", "Cutting" and "Storing".

Threshing (relating to main groups A01F 5/00-A01F 12/00 and A01F 17/00-A01F 21/00):

Methods and apparatus for separating grains or seeds from harvested plants or plant parts by mechanical action.

Baling (relating to main groups A01F 13/00-A01F 21/00):

Methods and apparatus for forming bales of straw, hay or like harvested products of plant origin.

Bundling (relating to main group A01F 1/00):

Stationary apparatus or hand tools for forming or binding bundles of straw, hay or like harvested products of plant origin.

Cutting (relating to main groups A01F 3/00 and A01F 29/00):

Apparatus specially adapted for cutting or disintegrating straw, hay or like already harvested products of plant origin.

Storing (relating to main group A01F 25/00):

Mechanical aspects (e.g. material handling aspects) of apparatus (e.g. silos) or methods that are specially adapted for storing harvested agricultural or horticultural crops.

Relationship between large subject matter areas

Threshing

Main groups A01F 5/00-A01F 12/00 and A01F 17/00-A01F 21/00 provide for threshing devices and for accessories that are directly connected with threshing. Combines, and details of combines that are not directly connected with the threshing action (e.g. mowing, feeding or vehicular features) are covered by A01D.

Baling

Main groups A01F 13/00-A01F 21/00 are application-oriented places for methods or apparatus for baling that are specially adapted for straw, hay or like harvested products of plant origin. Baling of compressible fibrous material in general is provided for in B65B 27/12. Baling presses in general is provided for in B30B 9/30. Bales of material are provided for in B65D 71/00.

Bundling

Main group A01F 1/00 is an application-oriented place for stationary apparatus or hand tools for bundling, which are specially adapted for straw, hay or like harvested products of plant origin. Binding of harvested products by mobile apparatus in the field is provided for in A01D, for example in A01D 37/00, A01D 39/00 and A01D 59/00. Bundling of compressible fibrous material in general is provided for in B65B 27/12. Bundling of articles in general is provided for in B65B 13/00.

Cutting

Main groups A01F 3/00 and A01F 29/00 are application-oriented places for apparatus or methods that are specially adapted for cutting up or disintegrating straw, hay or like already harvested products of plant origin. Mowing and other cutting down of standing plants is covered by A01D and A01G. Cutting in general is covered by B26. Disintegrating in general, e.g. by rotating knives, is covered by B02C.

Storing

Main group A01F 25/00 is an application-oriented place for mechanical aspects (e.g. material handling aspects) of apparatus or methods that are specially adapted for storing harvested agricultural or horticultural crops. Containers for storage of articles or materials in general is covered by B65D. Storing and associated handling of bulk material or articles in general is covered by B65G. Civil-engineering aspects of silos or similar bulk storage containers are covered by section E, for example E04H 7/00.

References relevant to classification in this subclass

This subclass does not cover:

Threshing

Separation of grains or seeds from plants in the place where they grow	A01D
Combines with thresh before the stalk is cut, Harvesting of standing crops, Picking of fruits	A01D 41/08, A01D 45/00, A01D 46/00
Combines	A01D 41/00, A01D 45/00, A01D 57/00, A01D 61/00-A01D 75/00
Field threshers with windrow pick-up apparatus	A01D 41/10
Pick-ups for harvested crop	A01D 89/00
Coring or stoning of fruit	A23N 3/00, A23N 4/00, A47J 23/00, A47J 25/00
Removing seed-containing sections from fruit	A23N 4/00, A23N 7/08
Hulling, husking or cracking of nuts	A23N 5/00, A47J 43/26

Baling

Arrangements for making or setting stacks	A01D 85/00
Pick-ups for harvested crop	A01D 89/00

Bundling

Arrangements for making or setting stacks in connection with harvesting	A01D 85/00

Cutting

Cutting or disintegrating in combination with mowing	A01D 43/08
Pick-ups for harvested crop	A01D 89/00
Shredding tea leaves	A23F 3/12
Fodder mashers for preparing animal feeding-stuff	A23N 17/02
Cutting tobacco	A24B 7/00

Spice mills	A47J 42/00

Storing

Arrangements for making or setting stacks, used in connection with harvesting	A01D 85/00
Devices for preserving flowers	A01G 5/06
Arrangements in barns for treatment of tobacco	A24B 1/02
Suspending devices for tobacco leaves	A24B 1/08
Cabinets for perishable goods	A47B 71/00
Fruit or potato storage cabinets, racks or tray for domestic use	A47B 75/00
Closed containers for foodstuffs	A47J 47/02
Drying or storing hops	C12C 3/02, C12C 3/04
Civil engineering aspects of bulk storage containers, e.g. silos	E04H 7/00

Examples of places where the subject matter of this subclass is covered when specially adapted, used for a particular purpose, or incorporated in a larger system:

Baling

Vehicles for carrying harvested crops with bale-forming means additionally used for loading	A01D 90/08
Packing or pressing tobacco	A24B 1/10

Bundling

Apparatus for binding bouquets or wreaths of flowers	A01G 5/02
Packing or pressing tobacco	A24B 1/10

Informative references

Attention is drawn to the following places, which may be of interest for search:

Threshing

Separating solids using pneumatic tables or jigs	B03B
Separating solids from solids by dry methods, in general	B07B
Hulling, husking, decorticating or removing awns otherwise than in connection with threshing	B02B 3/00
Conveying in general	B65G

Baling

Forming of bundles of straw, hay or like material of plant origin	A01D 37/00, A01D 39/00, A01D 57/00- A01D 75/00, A01F 1/00
Loaders for bales	A01D 87/12, A01D 90/08

Baling of compressible fibrous material in general	B65B 27/12
Baling presses in general	B30B 9/30
Bales of material	B65D 71/00
Conveying in general	B65G

Bundling

Mobile binders for use while harvesting	A01D 37/00, A01D 39/00, A01D 57/00- A01D 75/00
Loaders for sheaves	A01D 87/12
Forming of bales	A01F 13/00, A01F 15/00
Bundling of compressible fibrous material in general	B65B 27/12
Bundling of articles in general	B65B 13/00

Cutting

Mowing	A01D
Cutting implements specially adapted for horticultural purposes, e.g. flower shears, fruit shears, secateurs or hedge shears	A01G 3/00
Apparatus for destruction of unwanted vegetation	A01M 21/00
Household implements for mashing potatoes or other foodstuff	A47J 19/04
Disintegrating in general	B02C
Hand-held cutting tools	B26B
Cutting in general	B26D
Conveying in general	B65G

Storing

Protecting growing plants	A01G 13/00
Preservation of plants or parts thereof	A01N 3/00
Preserving flour by storage in an inert atmosphere	A21D 4/00
Preservation of fruits or vegetables	A23B 7/00
Preservation of edible seeds	A23B 9/00
Preservation of edible oils or fat	A23D 7/06, A23D 9/06
Preservation of materials to produce animal feeding stuff	A23K 30/00
Preservation of foods or foodstuffs in general	A23L 3/00
Containers for storage of articles or materials in general	B65D
Storage and associated handling of bulk material or articles in general	B65G
Conserving hops	C12C 3/04
Refrigerators, cold rooms, or the like	F25D
Drying in general	F26B

Glossary of terms

In this subclass, the following terms (or expressions) are used with the meaning indicated:

Bale (noun)	A compressed, solid package of harvested material, which is either held together by thread or webs or formed by the material itself (with or without additives) to maintain its shape.
Bundle (noun)	A relatively loose package of harvested material, normally consisting of straws or stalks that are oriented in parallel to each other. It can either be held together by thread or webs or be formed by the material itself.
Combine (noun)	Harvester or mower combined with a threshing device.
Harvest (verb)	Separate useful parts from growing plants in situ, mow plants, or gather whole plants or their useful parts from the ground or from where the plants grow, with the intention to make use of the separated, mown or gathered plantmaterial.
Mow (verb)	Cut down grass, cereals or other standing plants.
Threshing	Separation of grains or seeds from harvested plants or plant parts (e.g. cereals, maize/corn, peas, beans or pine cones) by mechanical action (e.g. shaking, stamping, rubbing, beating or applying intermittent pressure).

A01F 1/00

Stationary apparatus or hand tools for forming or binding straw, hay or the like into bundles (baling apparatus or presses A01F 13/00, A01F 15/00; mobile binders for use in the field A01D 37/00, A01D 39/00)

Informative references

Attention is drawn to the following places, which may be of interest for search:

Baling apparatus or presses	A01F 13/00, A01F 15/00
Mobile binder for use on the field	A01D 37/00, A01D 39/00

A01F 3/00

Hand-operated implements for cutting-up straw, hay or the like (mechanically-driven straw cutters A01F 29/00; cutting in general B26)

Definition statement

This group covers:

As the title describes, documents concerning devices which are hand-operated (i.e. by hand) to cut straw, hay or the like should be classified here.

Illustrated example of subject matter classified in A01F 3/00

Example from US1427733 by Antonio Groff

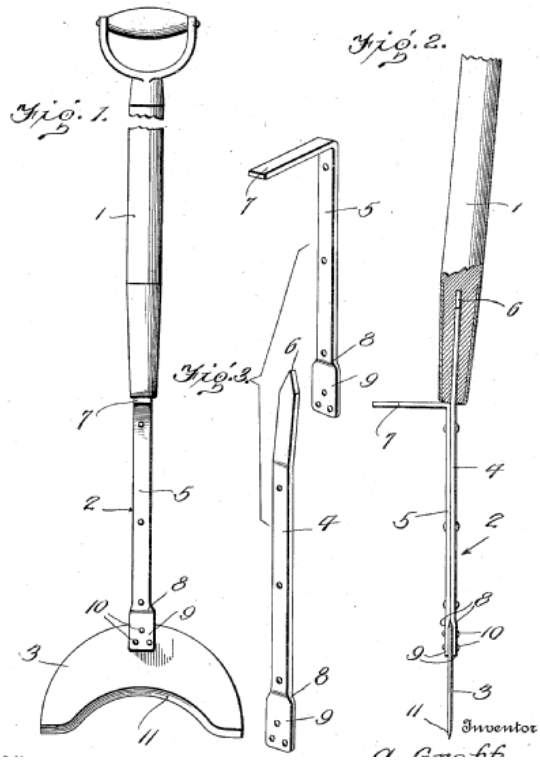

Informative references

Attention is drawn to the following places, which may be of interest for search:

Mechanically-driven straw cutter	A01F 29/00
Cutting in general	B26

A01F 7/00

Threshing apparatus

References relevant to classification in this subclass/group

This group does not cover:

Hand operated threshing implements	A01F 5/00

A01F 7/06

with axles in line with the feeding direction; {Axial threshing machines}

Informative references

Attention is drawn to the following places, which may be of interest for search:

Threshing devices	A01F 12/18

A01F 12/00

Parts or details of threshing apparatus (devices, other than safety devices for feeders, for protecting human beings A01D 75/20, A01F 21/00)

Informative references

Attention is drawn to the following places, which may be of interest for search:

Devices for protecting human beings	A01D 75/20, A01F 21/00

Special rules of classification within this group

Any document including canvas or tray to be put on the ground to measure loss of grain must be classified/searched here.

A01F 12/30

Straw separators {, i.e. straw walkers, for separating residual grain from the straw (grain cleaning A01F 12/44)}

Informative references

Attention is drawn to the following places, which may be of interest for search:

Grain cleaning	A01F 12/44

A01F 12/32

with shaker screens or sieves

Glossary of terms

In this subgroup, the following terms (or expressions) are used with the meaning indicated:

Screens or sieves	On the walker.

A01F 12/40

Arrangements of straw crushers or cutters

Informative references

Attention is drawn to the following places, which may be of interest for search:

Cutting apparatus specially adapted for cutting hay, straw or the like	A01F 29/00

A01F 12/42

Apparatus for removing awns from the grain

Informative references

Attention is drawn to the following places, which may be of interest for search:

Decorticating or removing awns otherwise than in threshing machines	B02B 3/00

A01F 12/48

Air conduits or blowers for grain

Informative references

Attention is drawn to the following places, which may be of interest for search:

For conveying through pipes or tubes in general	B65G 51/00, B65G 53/00

A01F 12/50

Sack-filling devices; Counting or weighing devices

Informative references

Attention is drawn to the following places, which may be of interest for search:

Packaging in bags	B65B 1/00
Weighting apparatus in general	G01G
Counting mechanisms in general	G06M

A01F 13/00

Hand-operated baling apparatus

Definition statement

This group covers:

As the title describes, documents concerning devices which are hand-operated (i.e. by hand) to bale straw, hay or the like should be classified here.

A01F 15/00

Baling presses for straw, hay or the like {(making compressed stacks A01D 85/00)}

Definition statement

This group covers:

Presses (i.e. machines which are not hand-operated) capable of producing a bale (material on which a substantial compression has been carried out).

Informative references

Attention is drawn to the following places, which may be of interest for search:

Pick-up for balers	A01D 89/00
Making compressed stacks	A01D 85/00
Pressing in general	B30B

A01F 15/005

{for conditioning bales, e.g. rebaling}

Definition statement

This subgroup covers:

Reducing the size of a bale by re-compressing it after it has been formed a first time.

A01F 15/02

with press-boxes {(A01F 15/046 takes precedence)}

Definition statement

This subgroup covers:

Devices in which the product is introduced in a box in order to produce a bale, but without compression means which compress the material after its introduction in the box (e.g. rams, compression belts, etc)

Illustrated example of subject matter classified in A01F 15/02

Example from US5193449 by Ransom Woodbury S.

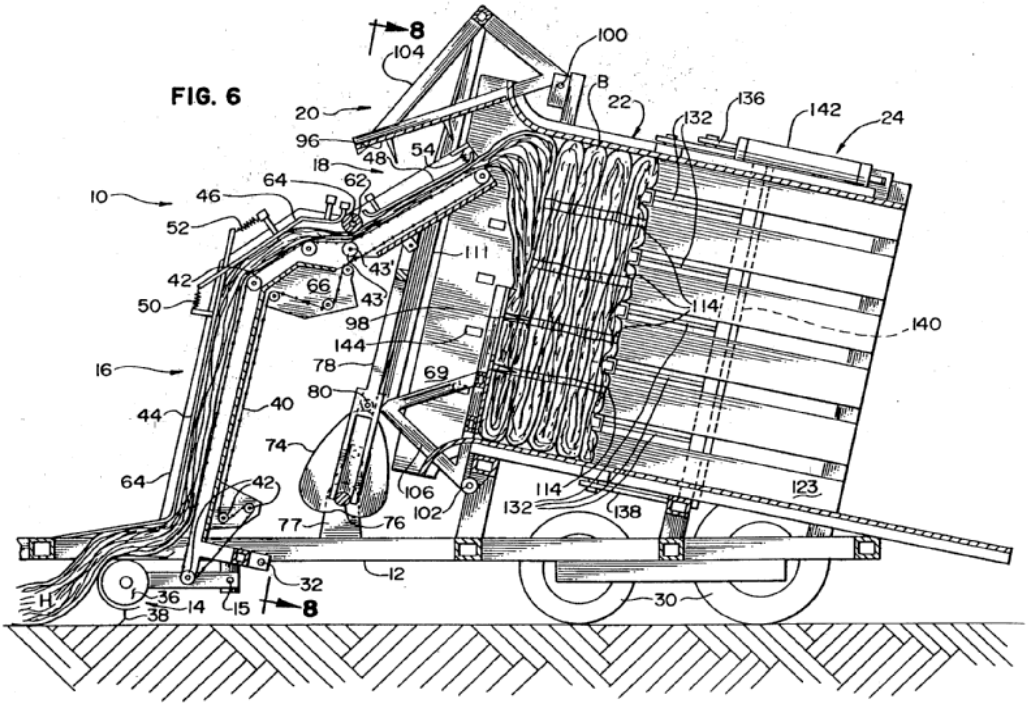

Informative references

Attention is drawn to the following places, which may be of interest for search:

Plunger presses with press-boxes	A01F 15/046

A01F 15/04

Plunger presses

Definition statement

This subgroup covers:
Illustrated example of subject matter classified in A01F 15/04

Example from US4782651 by Hay and Forage Corp.

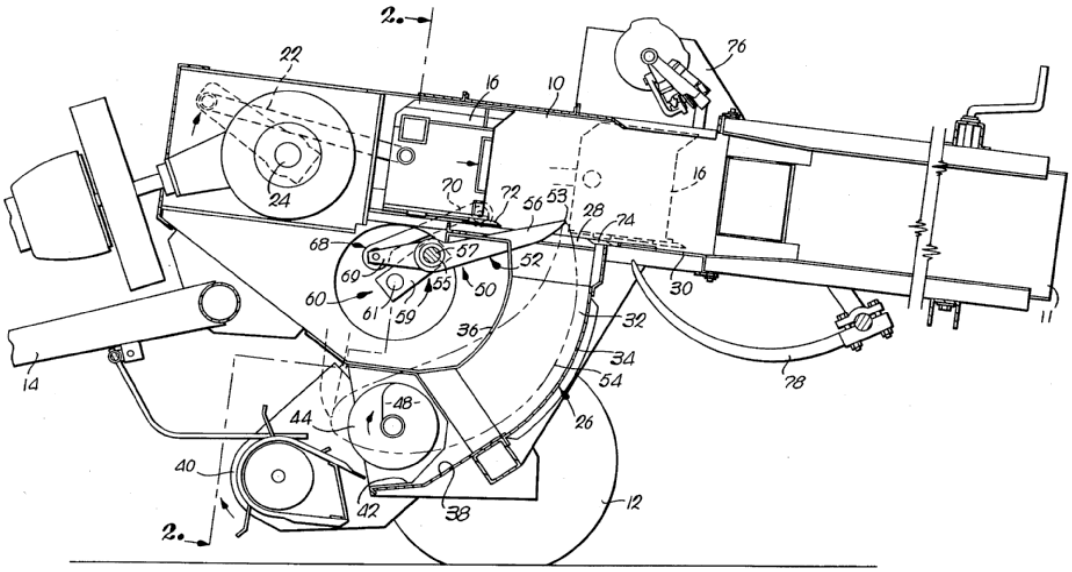

Informative references

Attention is drawn to the following places, which may be of interest for search:

Presses using a pressing ram	B30B 1/00

Special rules of classification within this group

If the documents classified in this group (or subgroups) comprise anti-return means, then they must be also indexed in the group A01F 2015/048

A01F 15/06

with double-action plunger

Definition statement

This subgroup covers:
Baling devices comprising a plunger which compresses material when moving in either direction.

Illustrated example of subject matter classified in A01F 15/06

Example from FR1381197 by Sperry Rand Corp.

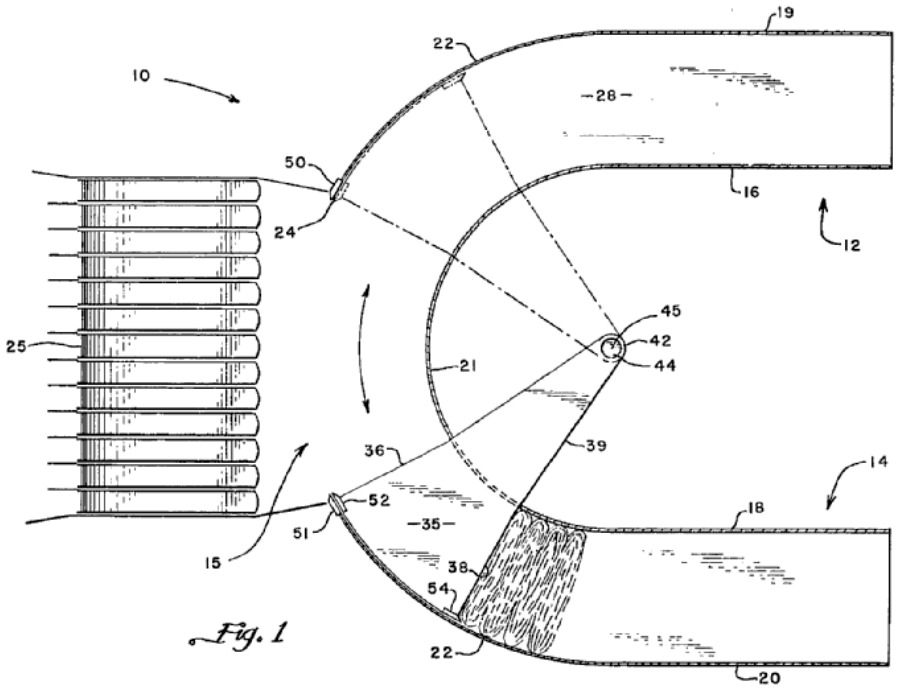

A01F 15/07

Rotobalers, i.e. machines for forming cylindrical bales by winding and pressing

Definition statement

This subgroup covers:

The construction of the rotobaler for the purpose of winding the material in order to form a cylindrical bale. Typically they also bind or wrap the bale once finished, but those aspects are dealt with in other subgroups, in the same way as some other particular aspects of the construction not directly related to the configuration of the baling chamber (e.g drives, feeding devices, etc).

Illustrated example of subject matter classified in A01F 15/07

Example from EP2269440 by CNH Belgium NV

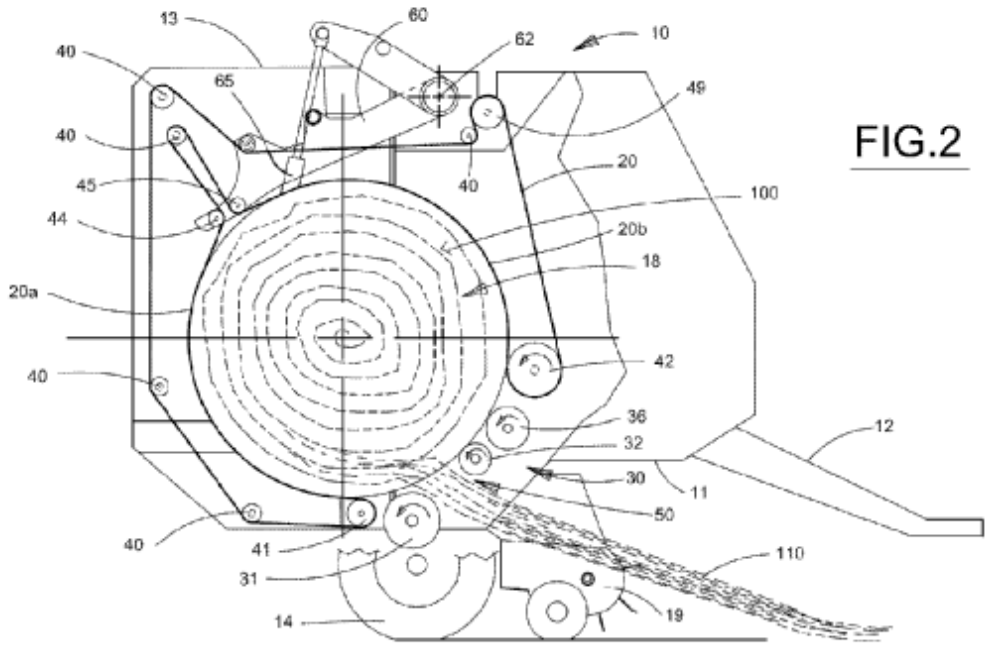

FIG.2

Informative references

Attention is drawn to the following places, which may be of interest for search:

Pressing in general by means other than rams	B30B 9/3082
Crop pelleting or briquetting	B30B 11/222

Special rules of classification within this group

Some special aspects of the documents classified in this group must be also indexed (if applicable) in the groups A01F 2015/077 (chamber formed by belts and rollers), A01F 2015/0775 (fix volume chambers), A01F 2015/078 (chamber delimited only by flexible elements), A01F 2015/0785 (locking means for the chamber), A01F 2015/079 (rollers' sledge) and A01F 2015/0795 (variable volume chambers)

A01F 15/0705

{Arrangements for continuous operation}

Definition statement

This subgroup covers:

Rotobalers which do not need to stop after having finished a bale before starting a new one.

Example from EP1264532 by Deere&Co.

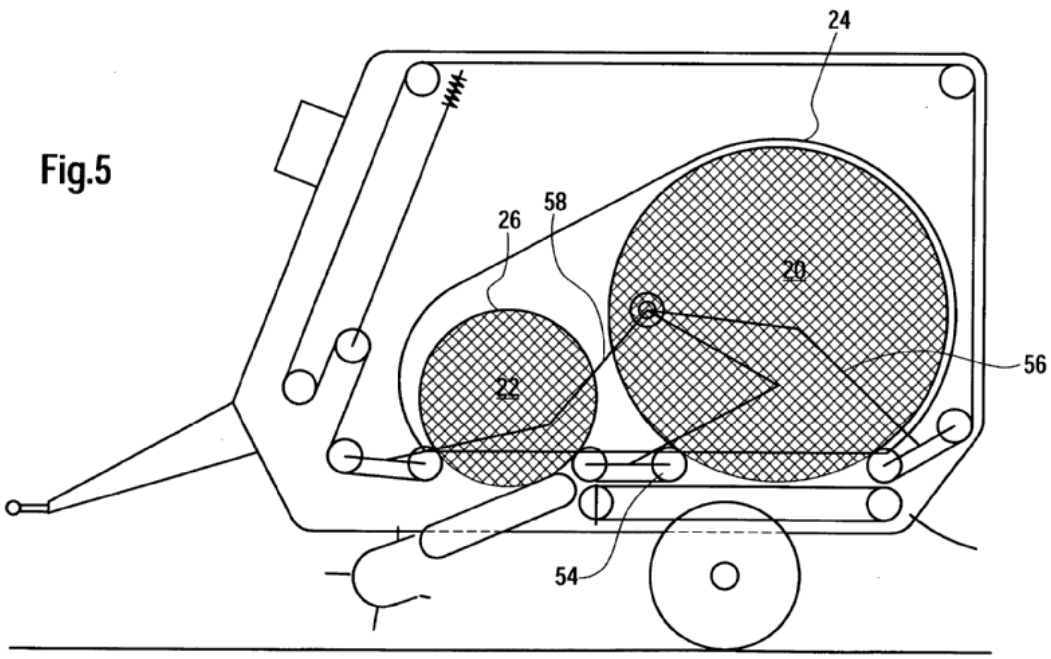

A01F 15/071

{Wrapping devices (tying devices A01F 15/141)}

Definition statement

This subgroup covers:

This group includes wrappers which travel around static bale on a wrapping table or similar.

Example from EP2123145 by Idough Invest Company.

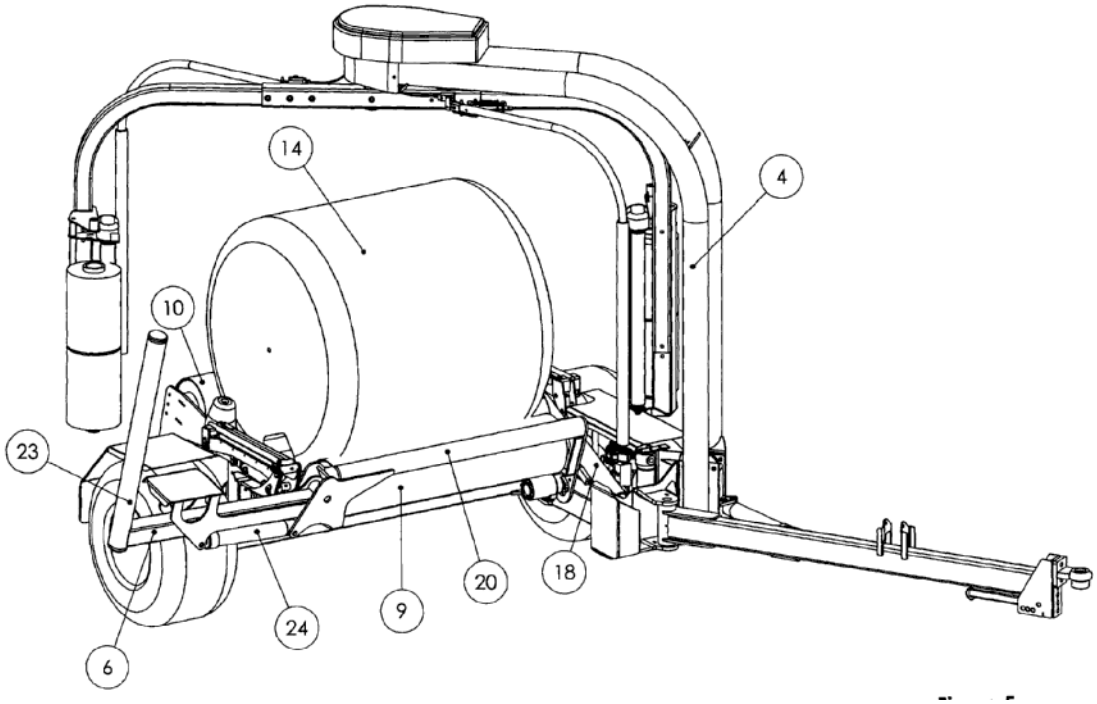

References relevant to classification in this subclass

This subgroup does not cover:

Wrappers for groups of bales	A01F 25/14
Machinery for making sausage-like groups of bales by wrapping or bagging	A01F 2025/142

Informative references

Attention is drawn to the following places, which may be of interest for search:

Tying devices for bales	A01F 15/141
Wrapping of cylindrical objects	B65B 27/125, B65B 11/04, B65B 11/045

Special rules of classification within this group

All devices for wrapping bales individually (including square bales) must be classified here, even if they are not integrated in a baler.

Wrapping requires covering, but not necessarily covering 100% of bale surface.

Some special aspects of the documents classified in this group must be also indexed (if applicable) in the groups A01F 2015/0725 (film dispensers), A01F 2015/073 (rotating arms), A01F 2015/0735 (combinations of bale press and wrapper), A01F 2015/074 (discharge), A01F 2015/0745 (wrapping material), A01F 2015/075 (wrapping with open baling chamber), A01F 2015/0755 (wrapping table), and A01F 2015/076 (sensors)

A01F 15/0715

{Wrapping the bale in the press chamber before opening said chamber}

Definition statement

This subgroup covers:

Illustrated example of subject matter classified in A01F 15/0715

Example from EP1707046 by Deere&Co.

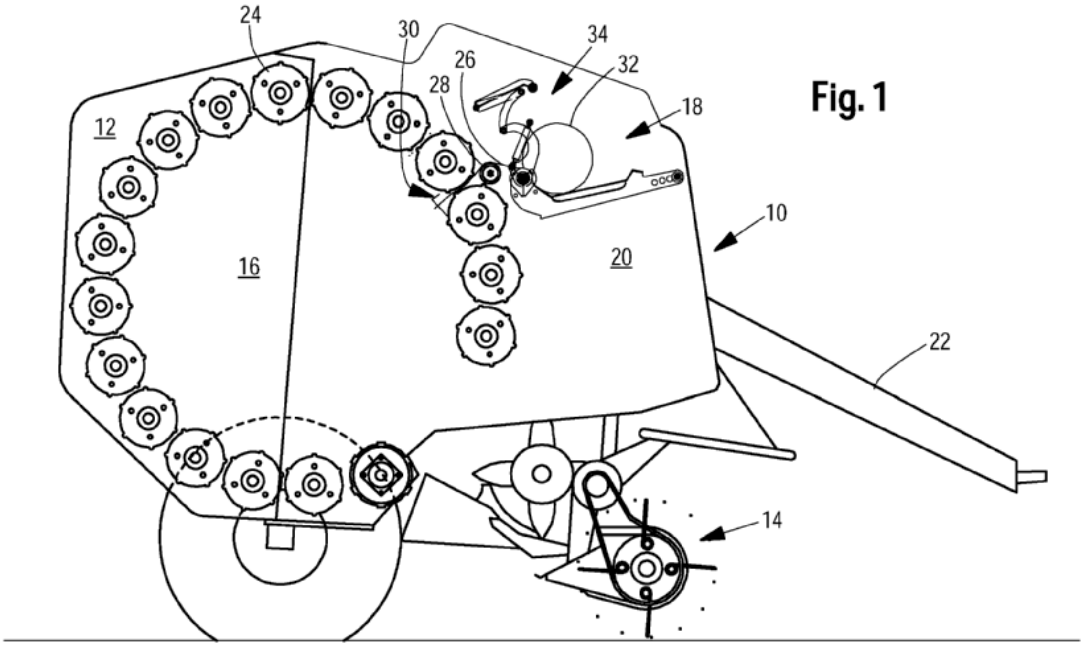

Special rules of classification within this group

If the documents classified in this group include braking means for the film, then they must be also indexed in the group A01F 2015/072 . If they include sensors, then they must also be indexed in the group A01F 2015/076

A01F 15/08

Details

Definition statement

This subgroup covers:

This head group should only be used for details which do not have a proper group available under the subgroups of this class, and which do not relate to the general principle behind the previous head groups (A01F 15/005, A01F 15/02, etc), but to details of such devices which could be applicable to different types of presses (plunger presses, rotobalers, etc). E.g. a counter of bales mounted on a square baler and based on an image-processing system which detects the bale once dropped on the field.

Special rules of classification within this group

If the documents classified in this group (or subgroups) include an inclinometer, they must be also indexed in the group A01F 2015/0808

A01F 15/0825

{Regulating or controlling density or shape of the bale}

Definition statement

This subgroup covers:

Devices which regulate or control density or shape of a bale which is being produced in a baler.

Informative references

Attention is drawn to the following places, which may be of interest for search:

Extrusion chambers with adjustable outlet opening	B30B 9/3025

A01F 15/0858

{for the tying devices or needles}

Special rules of classification within this group

If the documents classified in this group include a clu tch for the knotter and/or a bale-length measuring device, then they must be also indexed in the group A01F 2015/0866

A01F 15/0875

{Discharge devices}

Definition statement

This subgroup covers:

Devices to discharge a bale from a baler.

Platforms and the like to discharge the bale from the baler onto the field.

Example from EP1935232 by CNH Belgium NV.

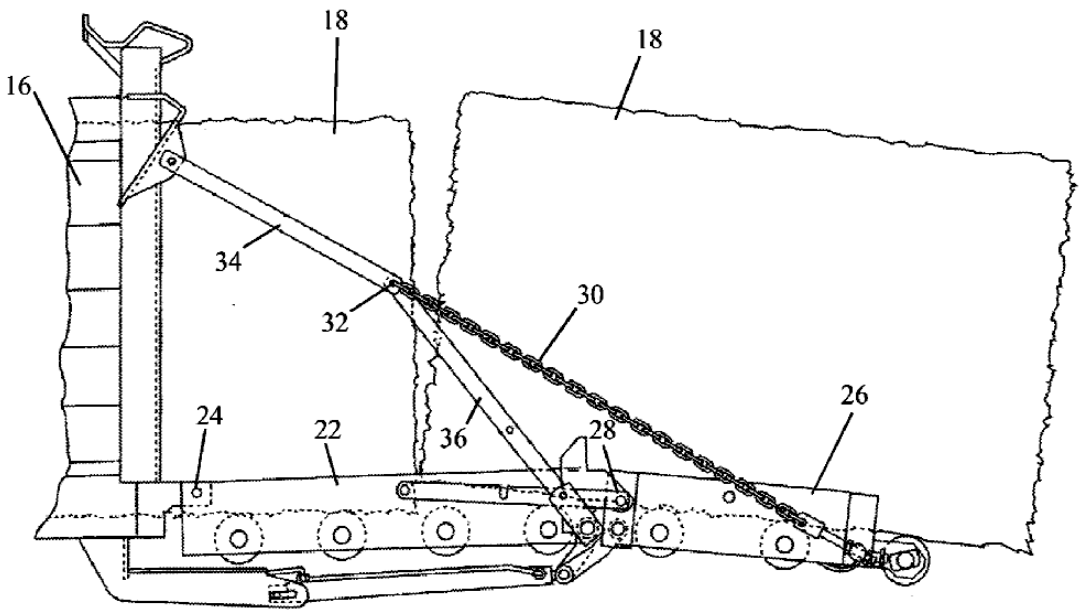

Special rules of classification within this group

If the documents classified in this group (or subgroup) comprises a bale weighing device, then they must be also indexed in the group A01F 2015/0891

A01F 15/10

Feeding devices for the crop material, {e.g. precompression devices (pick-ups A01D 89/00)}

Definition statement

This subgroup covers:

Pick-ups, feeding rollers, conveyors, cutters, etc particularly adapted for feeding material to balers.

Example from EP1562739 by AGCO Corp.

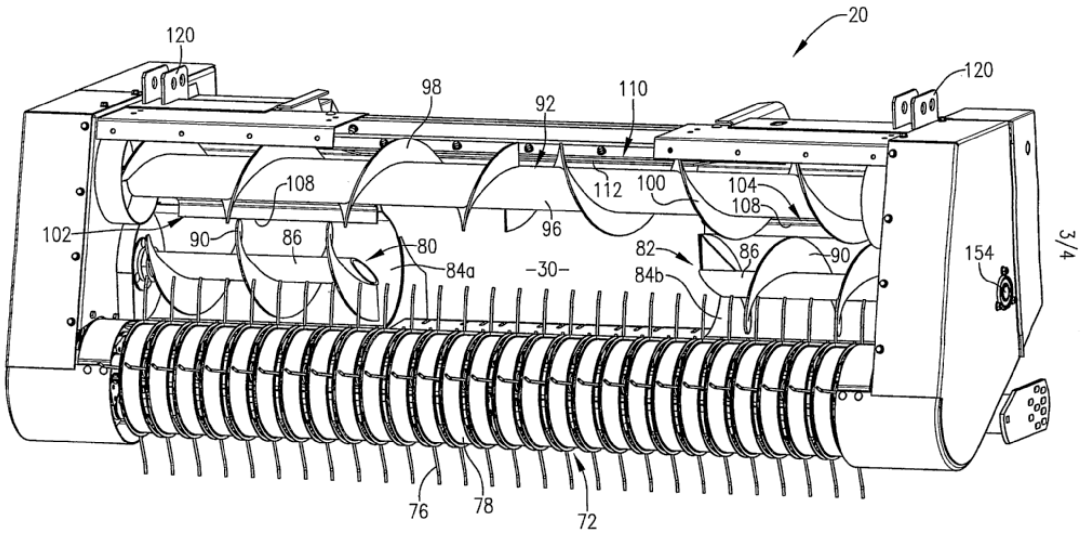

Informative references

Attention is drawn to the following places, which may be of interest for search:

Loaders for loading wagons	A01D 90/04
Pick-ups	A01D 89/00

Special rules of classification within this group

Some special aspects of the documents classified in this group must be also indexed (if applicable) in the groups A01F 2015/107 (withdrawing knives, rotors, walls), and A01F 2015/108 (cutter and counter-cutter)

A01F 15/101

{Feeding at right angles to the compression stroke (A01F 15/106 takes precedence)}

Definition statement

This subgroup covers:

The feeder which introduces material directly into the pressing chamber at right angle to the compression stroke.

Example from EP1769674 by Usines Class France SAS.

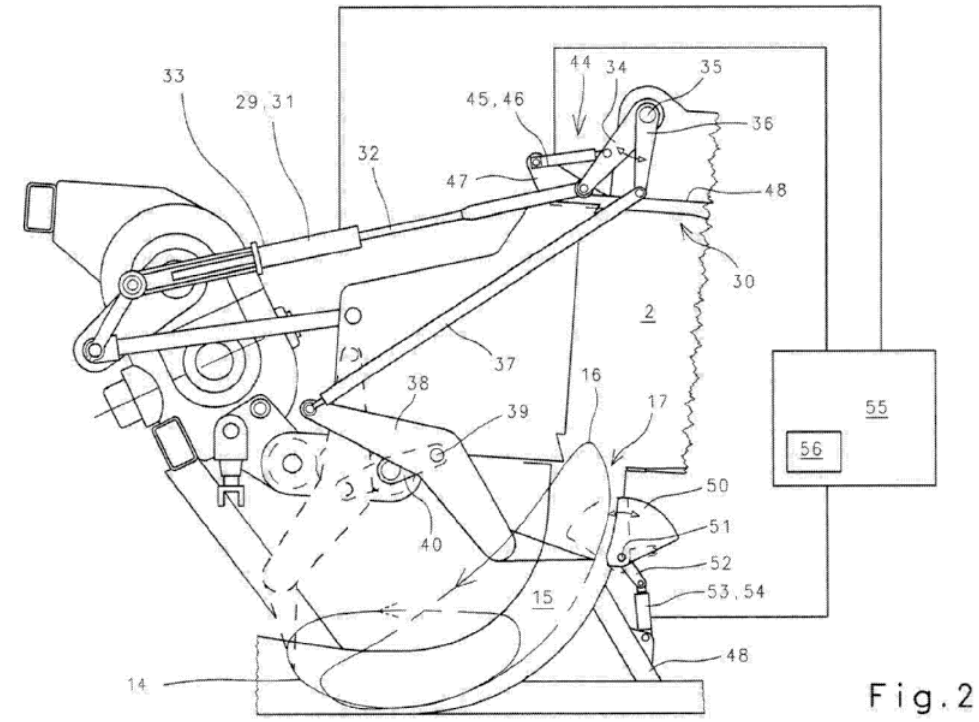

Fig. 2

References relevant to classification in this subclass/group

This subgroup does not cover:

Feeding devices for round balers takes precedence	A01F 15/106

Special rules of classification within this group

Some special aspects of the documents classified in this group must be also indexed (if applicable) in the groups A01F 2015/102 (bottom feeding), A01F 2015/103 (side feeding), and A01F 2015/105 (top feeding)

A01F 15/12

Feeding devices for the ties

Definition statement

This subgroup covers:

Device for feeding ties in a baler.

E.g. container of twine, tensioning mechanisms at the delivery point of twine, guiding devices.

Example from EP1234495 by Lely Machinenfabrik GmbH.

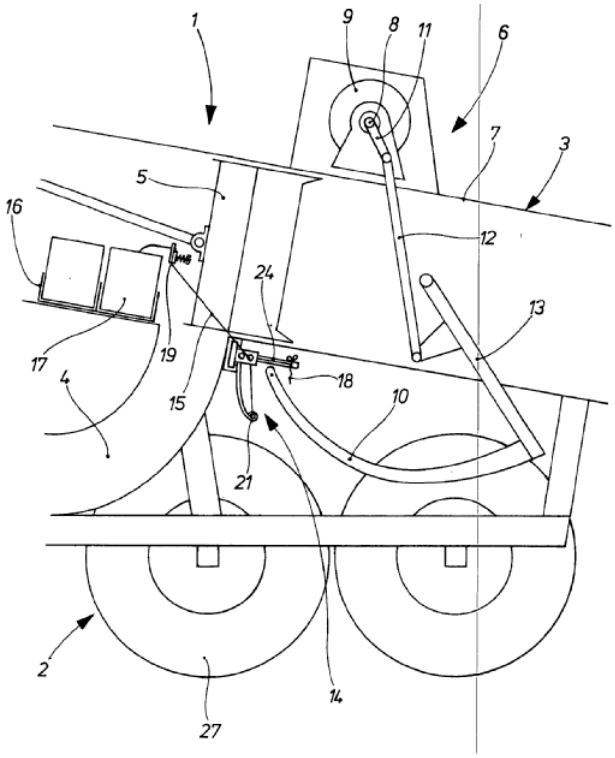

A01F 15/14

Tying devices specially adapted for baling presses {(independent binders A01D 39/00)}

Definition statement

This subgroup covers:

Devices for tying bales once finished

Includes devices for connecting the ends of binding material around the bale (even if ends are only produced after the material has been cut in order to eject the tied bale).

Example from EP464651 by Greenland GmbH&Co KG.

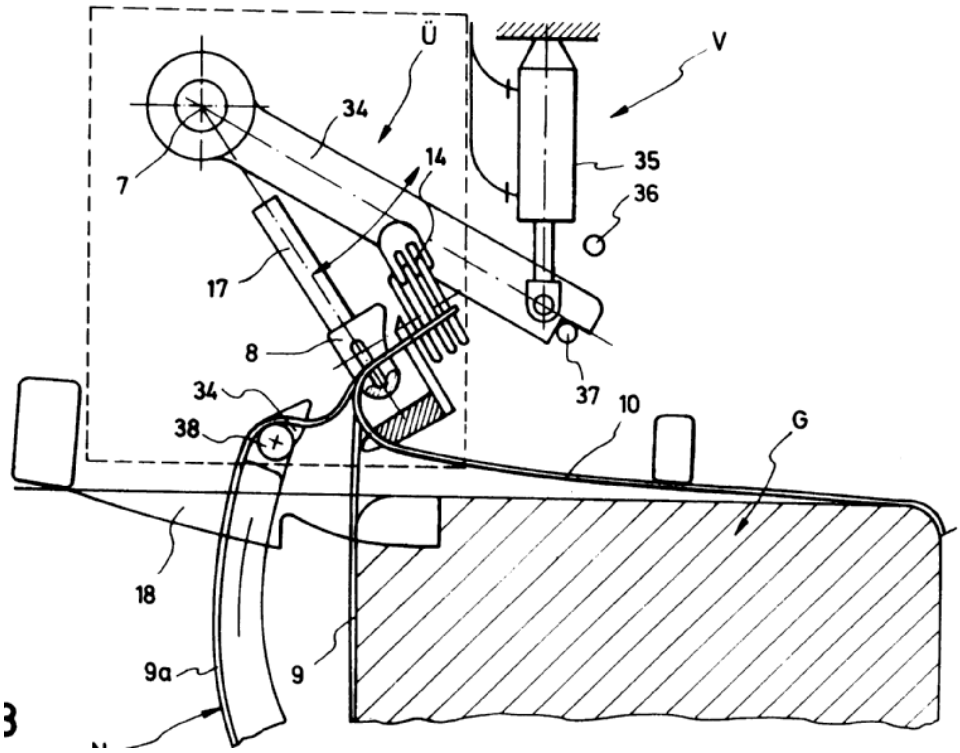

References relevant to classification in this group

This subgroup does not cover:

Feeding mechanisms for the ties	A01F 15/12
Needles, knotters	A01F 15/145
Devices for displacing twine around a round bale	A01F 15/141

Informative references

Attention is drawn to the following places, which may be of interest for search:

Equipment for binding harvested or mown produce	A01D 59/00
Independent binders	A01D 39/00
Drives for the tying devices or needles	A01F 15/0858

A01F 15/141

{for round balers (wrapping devices A01F 15/071)}

Informative references

Attention is drawn to the following places, which may be of interest for search:

Wrapping devices	A01F 15/0705

Special rules of classification within this group

If the documents classified in this group comprise guiding fingers for the twine, then they must be also indexed in the group A01F 15/141

A01F 15/16

Division blocks

Definition statement

This subgroup covers:

Blocks which separate consecutive bales inside a baler.

Example from FR458020 by Louis Francois Simon.

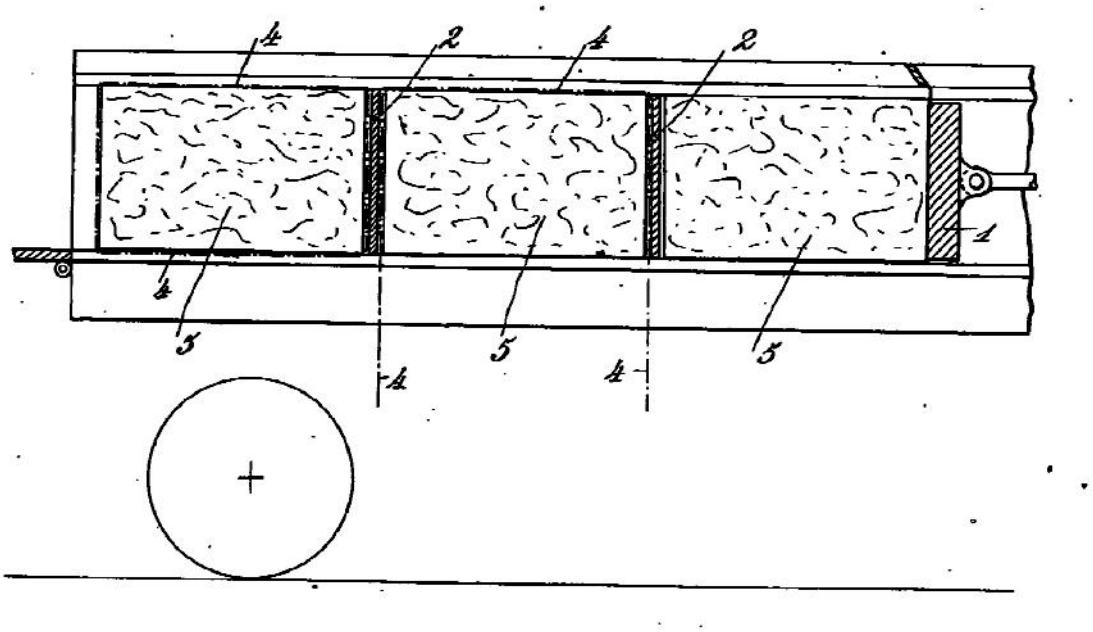

A01F 15/18

Endless belts, rolls or the like

Definition statement

This subgroup covers:

Endless belts, rolls or the like elements which are used to delimit a pressing chamber in a rotobaler.

Special rules of classification within this group

Some special aspects of the documents classified in this group must be also indexed (if applicable) in the groups A01F 2015/183 (belts), and A01F 2015/186 (rollers and their bearings)

A01F 17/00

Straw conveyors for threshing machines or baling presses

Definition statement

This group covers:

Conveyors for transporting straw along relatively long distances in order to reach the thresher or baler. E.g. to cover the distance between two machines, or two parts of the machine.

Example from DE1026230 by Arnold Spethmann.

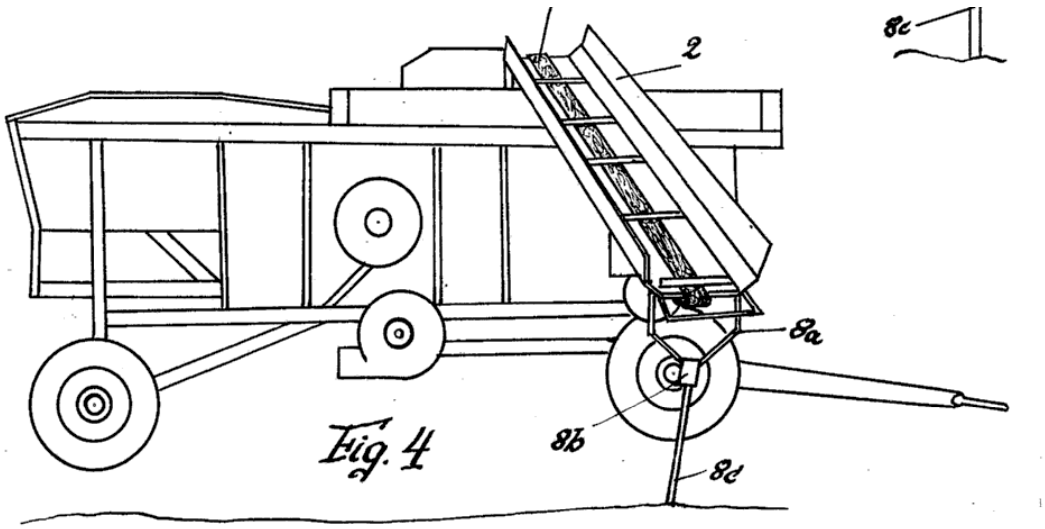

Informative references

Attention is drawn to the following places, which may be of interest for search:

Feeding devices for balers	A01F 15/10
Conveyors in general	B65G

A01F 19/00

Devices for securing threshing machines or baling presses to the ground, e.g. for compensating for unevenness of the ground

Definition statement

This group covers:

Bases for threshing machines and balers in order to work in a fixed position on the field, and also levelling devices for ensuring a certain orientation with regards to horizontal.

Example from FR412731 by Gaston Lebled Amilhat.

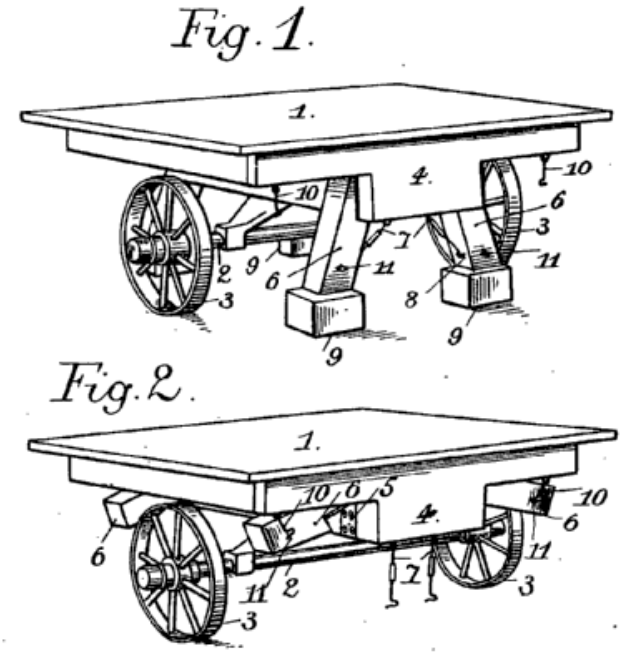

A01F 21/00

Devices for protecting human beings for threshing machines or baling presses (in combines A01D 75/20; for feeders for threshing apparatus A01F 12/16)

Definition statement

This group covers:

Devices intended to protect human beings from any risk, including noise protection.

References relevant to classification in this group

This group does not cover:

Not for safety devices for feeders for threshing apparatus	A01F 12/16

Informative references

Attention is drawn to the following places, which may be of interest for search:

Safety devices for feeders for threshing apparatus	A01F 12/16
Safety devices in combines	A01D 75/20
Safety devices in general	F16P

Special rules of classification within this subclass/group

An application disclosing a baler with a housing surrounding the mechanisms should not be classified here since all balers comprise a housing. Unless the application discloses a new housing which is intended to increase safety according to it (e.g. covering an area which until then was never covered).

A01F 25/00

Storing agricultural or horticultural produce; Hanging-up harvested fruit (maturing fruit A23N 15/06; arrangements in barns for preparatory treatment of tobacco A24B 1/02; packing or storing hops C12C 3/04)

Informative references

Attention is drawn to the following places, which may be of interest for search:

Preservation of plants	A01N 3/00
Preservation of vegetable or fruit	A23B 7/00
Maturing fruit	A23N 15/00
Arrangements in barns for preparatory treatment of tobacco	A24B 1/02
Storing bulk material in general	B65G
Packing or storing hops	C12C 3/04
Silos built by civil engineering techniques	E04H 7/22
Drying in general	F26B

Special rules of classification within this group

This group concerns the construction of “basic” or "mechanical" storage places, without artificial refrigeration and without complex chemical preservation.

Not for the chemical aspects of fruit storage which go beyond a simple drying in racks, or beyond ventilation of stacks or silos.

A01F 25/02

Clamps; Pits

Definition statement

This subgroup covers:

A clamp is characterised by being covered with earth, so it may be "above ground level" but would still be "underground" by definition. It might be for other products than potatoes.

Example from US1629392 by Ballard Killion James

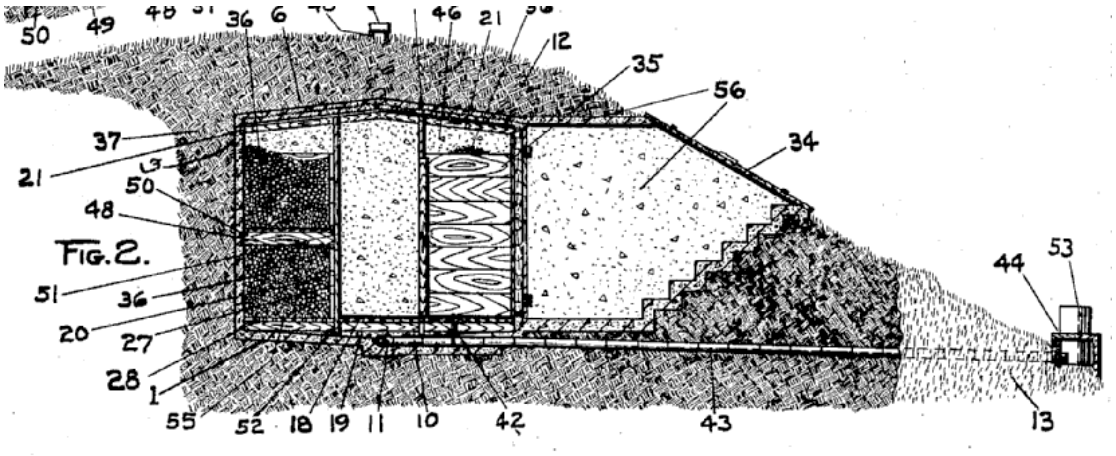

A01F 25/04

Stacks, ricks or the like

Definition statement

This subgroup covers:
All stacks of loose material (i.e. not stacks from bales)

Informative references

Attention is drawn to the following places, which may be of interest for search:

Arrangements for making or setting stacks	A01D 85/00

A01F 25/045

{Distributing arrangements in haystacks}

Definition statement

This subgroup covers:
Devices for distributing product when creating a haystack.

Informative references

Attention is drawn to the following places, which may be of interest for search:

Distributing arrangements for forage silos	A01F 25/186

A01F 25/08

Ventilating means

Informative references

Attention is drawn to the following places, which may be of interest for search:

Ventilating arrangements for forage silos	A01F 25/22
Drying solids in general	F26B

A01F 25/125

{Transport devices for hay racks}

Definition statement

This subgroup covers:
All devices for transporting hay racks, including hay racks having means for changing its location and apparatuses for handling hay racks, should be classified in this group.

Informative references

Attention is drawn to the following places, which may be of interest for search:

Loaders for sheaves and stacks	A01D 87/121

A01F 25/13

Coverings (A01F 25/14 takes precedence)

Definition statement

This subgroup covers:

Devices for covering harvested produce on one or more sides, but not completely surrounding it. Also for bales which are covered just on the top side.

Example from US2006010783 by Evans Timothy D.

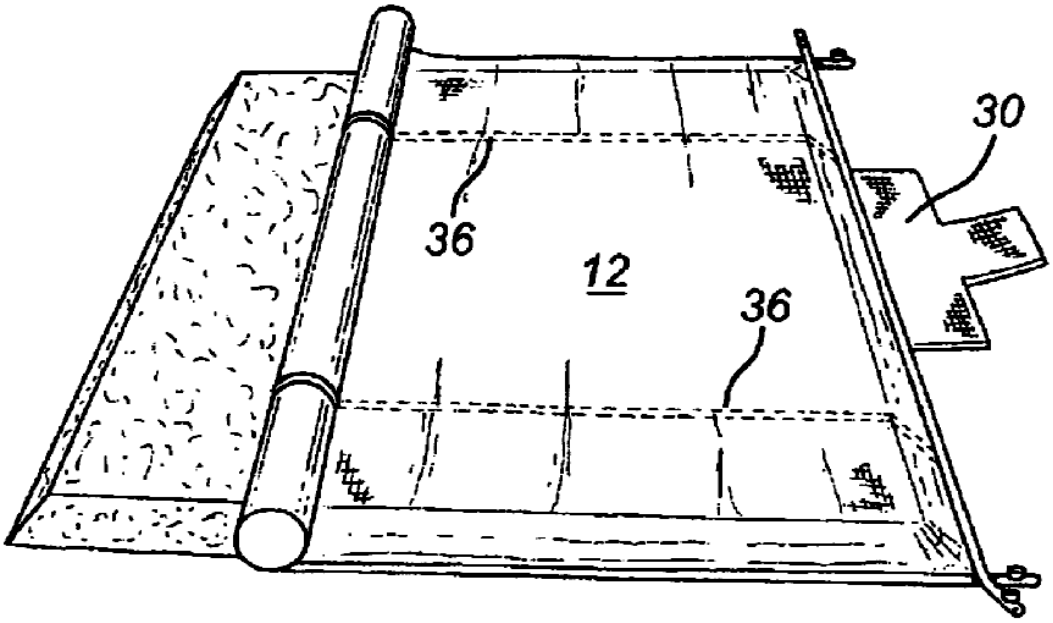

References relevant to classification in this group

This subgroup does not cover:

Containers which completely surround the harvested produce	A01F 25/14

Informative references

Attention is drawn to the following places, which may be of interest for search:

Protective coverings for plants	A01G 13/02
Containers specially adapted for storing takes precedence	A01F 25/14

A01F 25/14

Containers specially adapted for storing

Definition statement

This subgroup covers:

Containers completely surrounding and enclosing the product, in loose or baled form. E.g. baggers. Wrappers or baggers for groups of bales.

Example 1 from EP1826150 by Tabstar LTD T A Silasock R&D.

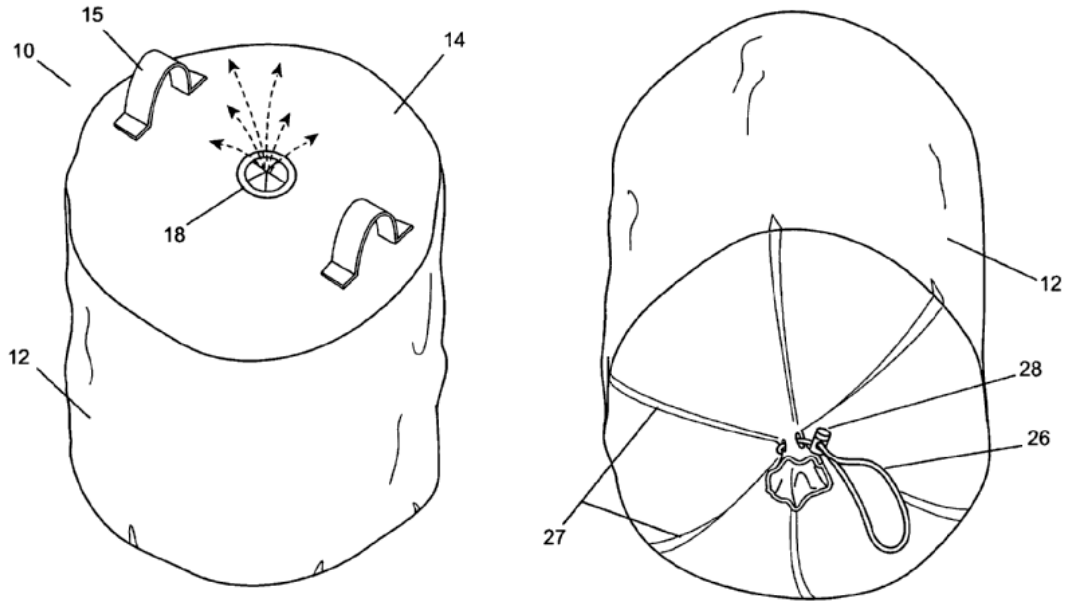

Example 2 from US6748724 by SRC Innovations LLC.

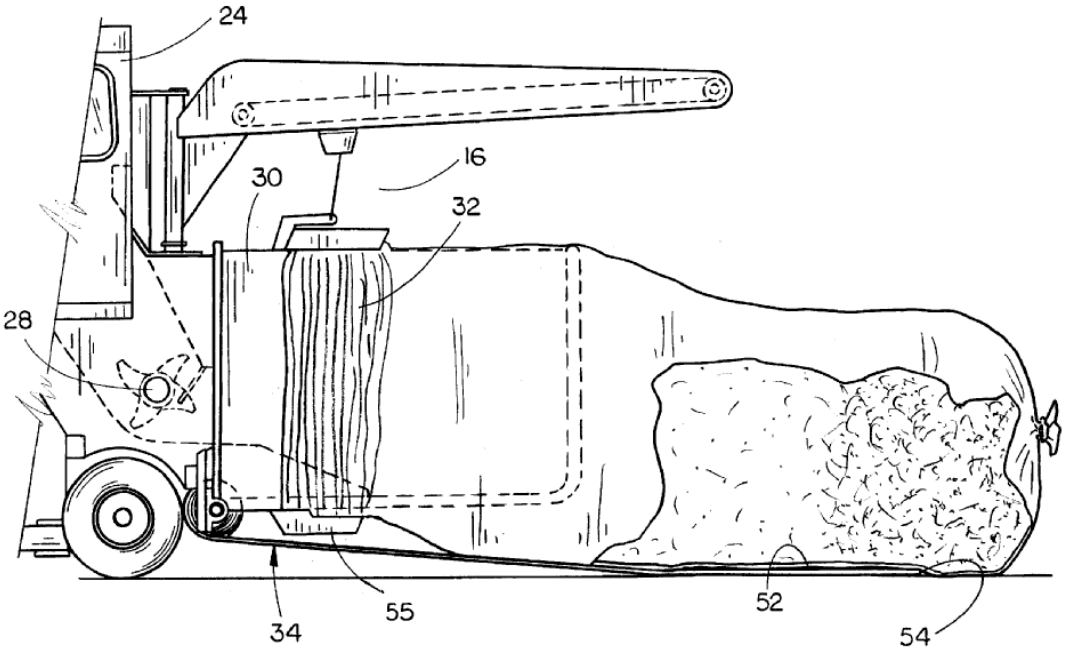

References relevant to classification in this subclass

This subgroup does not cover:

Wrappers for individual bales	A01F 15/071, A01F 15/0715

Informative references

Attention is drawn to the following places, which may be of interest for search:

Wrapping bales	A01F 15/071

Construction of containers for fluent solids, e.g. silos	E04H 7/22

Special rules of classification within this group

Some special aspects of the documents classified in this group must be also indexed (if applicable) in the groups A01F 2025/142 (for groups of bales), A01F 2025/145 (baggers for loose material), A01F 2025/147 (under vacuum)

A01F 25/16

Arrangements in forage silos

Definition statement

This subgroup covers:

Silos for forage which are made in the ground or above it in order to preserve said forage for future feeding or bedding of cattle.

Informative references

Attention is drawn to the following places, which may be of interest for search:

Loading or unloading arrangements in general	B65G
Construction of containers for fluent solids, e.g. silos	E04H 7/22

A01F 25/166

{in trench silos}

Definition statement

This subgroup covers:

Silos which are built as a trench in the ground, or between two longitudinal walls above ground level.

Example from EP1166618 by Gilbert Duhamel.

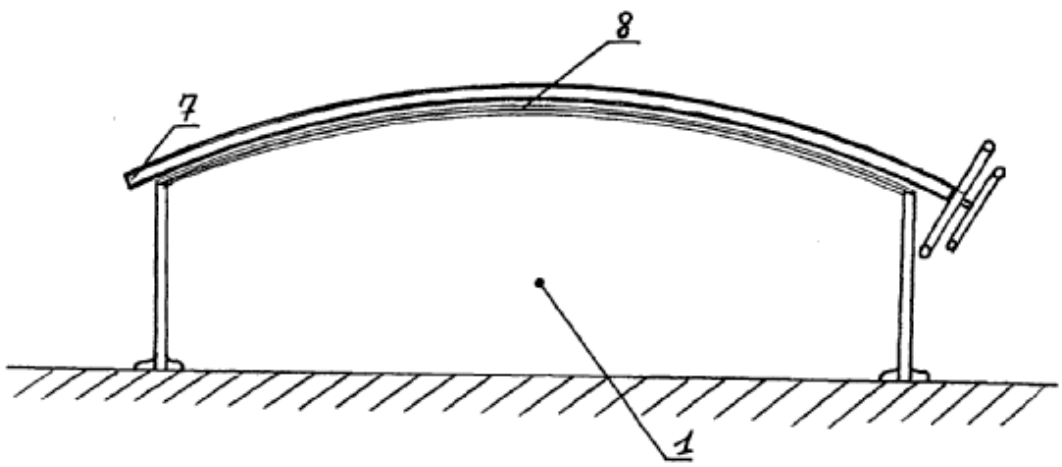

A01F 25/183

{Loading arrangements}

Definition statement

This subgroup covers:
Loading any kind of forage silos, including bags of forage.

Example 1 from US2002168253 by Musser Kenneth D.

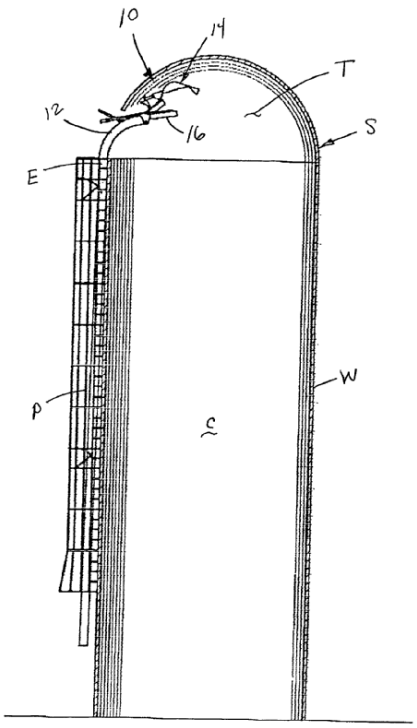

Example 2 from US2005097868 by Miller ST Nazianz Inc.

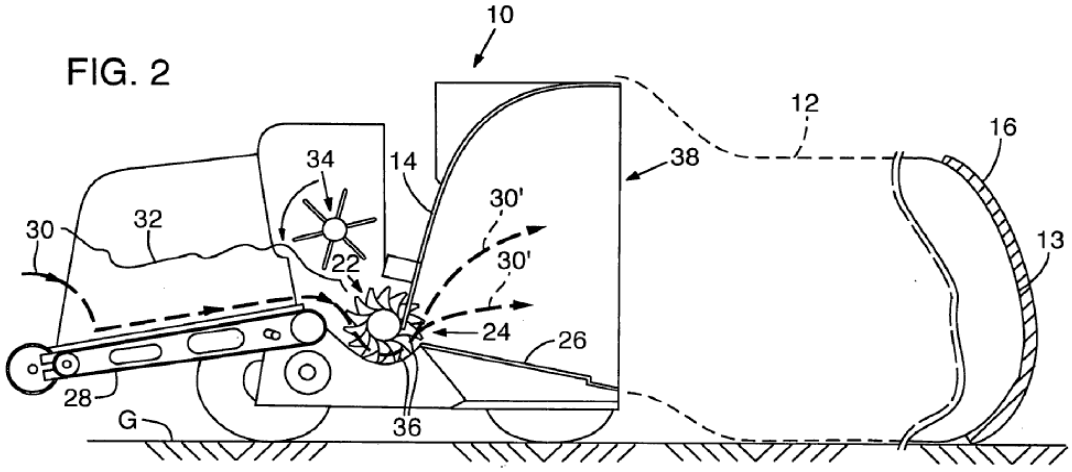

Informative references

Attention is drawn to the following places, which may be of interest for search:

Baggers	A01F 25/14

A01F 25/186

{Distributing arrangements (for haystacks A01F 25/045)}

Definition statement

This subgroup covers:
Devices for distributing product when loading a forage silo.

Informative references

Attention is drawn to the following places, which may be of interest for search:

Distributing arrangements for haystacks	A01F 25/045

A01F 25/2027

{for trench silos}

Definition statement

This subgroup covers:
Illustrated example of subject matter classified in A01F 25/2027

Example from FR2776164 by Mailleux SA

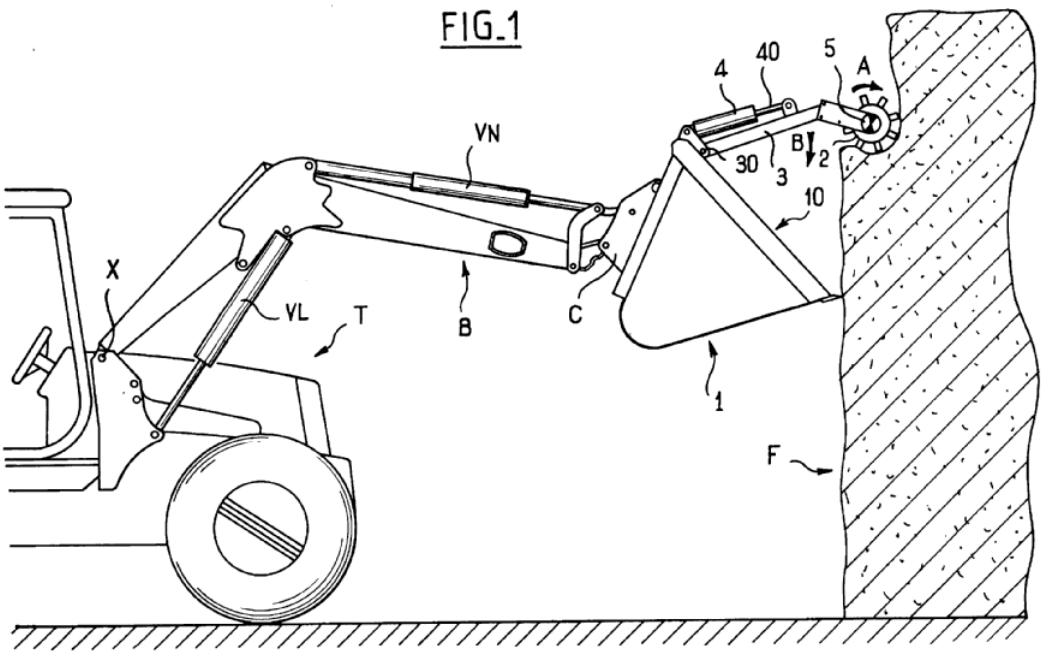

Special rules of classification within this group

Some special aspects of the documents classified in this group must be also indexed (if applicable) in the groups A01F 2025/2045 (transferring conveyor), A01F 2025/2054 (cutting layers), A01F 2025/2063 (shredding layers), A01F 2025/2072 (scoops), A01F 2025/2081 (hydraulics), and A01F 2025/209 (manual tools)

A01F 25/2036

{Cutting or handling arrangements for silage blocks}

Definition statement

This subgroup covers:
Cutting a complete block out of the forage silo and/or handling such block.

Example from EP087588 by Busatis Werke KG.

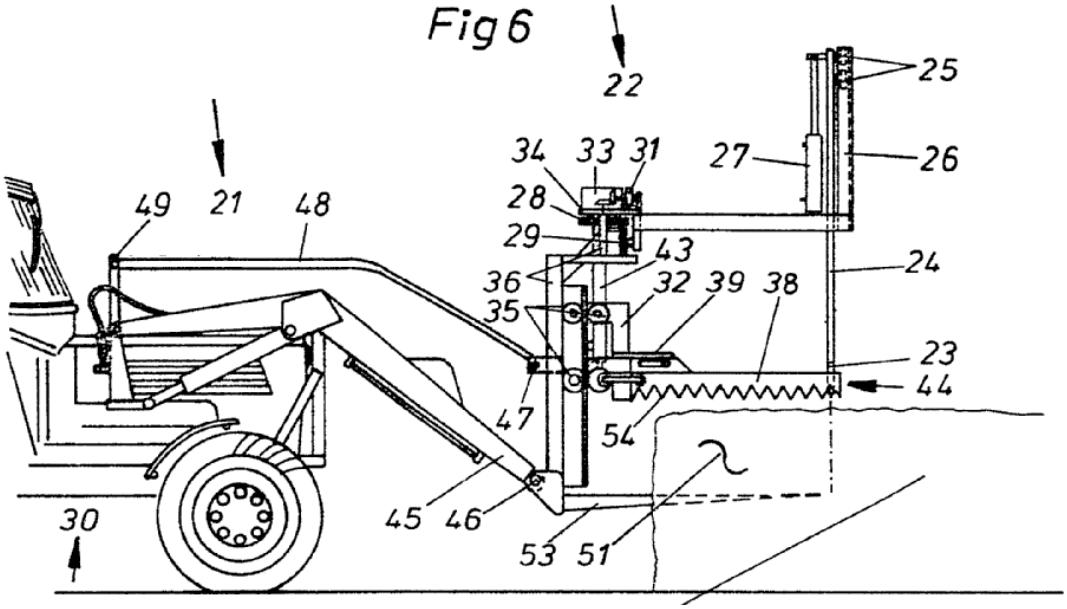

Informative references

Attention is drawn to the following places, which may be of interest for search:

Apparatus for handling round bales	A01D 87/127
Forks for loads	B66F 9/12
Forks with side clamps	B66F 9/183

A01F 25/22

Ventilating arrangements

Definition statement

This subgroup covers:
Devices for ventilating product which is stored in forage silos.

Informative references

Attention is drawn to the following places, which may be of interest for search:

Ventilating means for stacks	A01F 25/08
Drying solids in general	F26B

A01F 29/00

Cutting apparatus specially adapted for cutting hay, straw or the like (mowers combined with means for cutting up the mown crop A01D 43/08)

Informative references

Attention is drawn to the following places, which may be of interest for search:

Mowers combined with means for cutting up mown crop	A01D 43/08
Cutting machines in general	B26D

A01F 29/005

{for disintegrating and cutting up bales of hay, straw or fodder (for unrolling round bales A01D 87/127)}

Informative references

Attention is drawn to the following places, which may be of interest for search:

For unrolling round bales	A01D 87/127