EUROPEAN PATENT OFFICE
U.S. PATENT AND TRADEMARK OFFICE

CPC NOTICE OF CHANGES 132

DATE: DECEMBER 1, 2015

PROJECT DP0033

The following classification changes will be effected by this Notice of Changes:

Action	**Subclass**	**Group(s)**
New/modified/deleted Definitions (no frozen (F)symbol definitions should be deleted):	H04N	19/00, 19/10, 19/102, 19/105, 19/107, 19/109, 19/11, 19/112, 19/114, 19/115, 19/117, 19/119, 19/12, 19/122, 19/124, 19/126, 19/127, 19/129, 19/13, 19/132, 19/134, 19/137, 19/139, 19/14, 19/142, 19/146, 19/147, 19/149, 19/15, 19/152, 19/154, 19/156, 19/157, 19/162, 19/164, 19/167, 19/169, 19/17, 19/174, 19/189, 19/19, 19/ 192, 19/196, 19/20, 19/30, 19/31, 19/33, 19/37, 19/40, 19/42, 19/423, 19/44, 19/46, 19/467, 19/48, 19/50, 19/503, 19/507, 19/51, 19/513, 19/567, 19/573, 19/577, 19/58, 19/587, 19/59, 19/593, 19/597, 19/60, 19/619, 19/635, 19/65, 19/70, 19/80, 19/82, 19/85, 19/86, 19/87, 19/88, 19/89, 19/90, 19/91, 19/93, 19/94, 19/96, 19/97, 19/98, 19/99

No other subclasses/groups are impacted by this Notice of Changes.

This Notice of Changes includes the following *[Check the ones included]:*

1. CLASSIFICATION SCHEME CHANGES
   - ☐ A. New, Modified or Deleted Group(s)
   - ☐ B. New, Modified or Deleted Warning Notice(s)
   - ☐ C. New, Modified or Deleted Note(s)
   - ☐ D. New, Modified or Deleted Guidance Heading(s)
2. DEFINITIONS (New or Modified)
   - ☒ A. DEFINITIONS (Full definition template)
   - ☐ B. DEFINITIONS (Definitions Quick Fix)
3. ☐ REVISION CONCORDANCE LIST (RCL)

CPC NOTICE OF CHANGES 132

DATE: DECEMBER 1, 2015

PROJECT DP0033

4. ☐ CHANGES TO THE CPC-TO-IPC CONCORDANCE LIST (CICL)

5. ☐ CROSS-REFERENCE LIST (CRL)

2. A. DEFINITIONS (i.e. new or modified)

Replace the entire current definition:

H04N 19/00

Methods or arrangements for coding, decoding, compressing or decompressing digital video signals

Definition statement

This group covers:

- Methods or arrangements for coding or compressing an input digital video sequence for the purpose of onward transmission (e.g. by broadcasting), or of storage (e.g. at servers, set-top boxes or hard-disks) for subsequent reproduction in viewers' premises.
- Processing in accordance with standards such as MPEG-x or H.26x.
- Methods or arrangements for transform coding of static images.
- The scope of H04N 19/00 and its subgroups is limited to the part of digital video coding and compression strictly comprised between the digital video input and the compressed video output.

Relationship between large subject matter areas

- Processing of the compressed video (e.g. fragmentation in packet units, encapsulation, medium adaptation for transport, video distribution) is covered by H04N 21/00 or H04H.
- Processing of not yet compressed video signals or after decoding, such as re-sampling, interpolation, cropping, rotation, is generally covered by G06T, unless it interacts with aspects of processing for compression, in which case it is covered by relevant subgroups of H04N 19/00.
- Computer graphics compression is covered by G06T 9/00.
- General compression algorithms are covered by H03M 7/30.
- Processing of documents or images for scanning, transmission or reproduction (e.g. telefax) is covered by H04N 1/00.
- Details of digital television cameras, digital television receivers and digital video recorders are covered by H04N 5/00.

Informative references

Attention is drawn to the following places, which may be of interest for search:

Information retrieval and database structures therefor, e.g. in image databases	G06F 17/30
Pattern recognition (characters, fingerprints)	G06K 9/00
General purpose image data processing, e.g. hardware for image processing	G06T 1/00
Geometric image transformation in the plane of the image	G06T 3/00
Image restoration	G06T 5/00
Image analysis, e.g. analysis of motion	G06T 7/00
Image coding	G06T 9/00
2D image generation	G06T 11/00
2D image animation (e.g. sprites in general)	G06T 13/80
3D image rendering	G06T 15/00
3D image modelling	G06T 17/00
Speech or audio signal analysis-synthesis techniques for redundancy reduction, e.g. in vocoders; Coding or decoding of speech or audio signals, using source filter models or psychoacoustic analysis	G10L 19/00
Editing; Indexing; Addressing; Timing or synchronising; Monitoring; Measuring tape travel, e.g. signal processing for video editing and recording on a special recording medium	G11B 27/00
General data coding	H03M
Details of multimedia broadcast systems	H04H
Processing of documents or images for scanning, transmission or reproduction (e.g. telefax)	H04N 1/00
Bandwidth or redundancy reduction for scanning, transmission or reproduction of documents or the like, e.g. compression of two-tone or discrete tone static images	H04N 1/41
Colour conversion	H04N 1/60
Studio equipment, e.g. video cameras or devices for controlling television cameras	H04N 5/222
Television receivers	H04N 5/44
Video recording and play (e.g. trick play)	H04N 5/76
Closed circuit TV systems, details of video-surveillance cameras and circuits	H04N 7/18
Stereoscopic or multiview television systems	H04N 13/00
Diagnosis, testing or measuring for television systems	H04N 17/00
Selective content distribution	H04N 21/00

Synonyms and Keywords

In patent documents the following abbreviations are often used:

JPEG	Joint Photographic Experts Group
AVC	Advanced Video Coding
SVC	Scalable Video Coding
HEVC	High Efficiency Video Coding

Insert the following new definitions:

H04N 19/10

Methods or arrangements for coding, decoding, compressing or decompressing digital video signals using adaptive coding

Definition statement

This subgroup covers:

Static or dynamic adaptation in the interaction of the different building blocks or processes of the digital video compressor or decompressor, e.g. regulation of the parameters involved in the compression algorithm as a function of the channel capacity or of the desired quality of the reconstructed video signal.

Special rules of classification within this subgroup

When classifying in this group, each aspect relating to adaptive coding should, insomuch as possible, be classified in each one of subgroups H04N 19/102, H04N 19/134, H04N 19/169, and H04N 19/189.

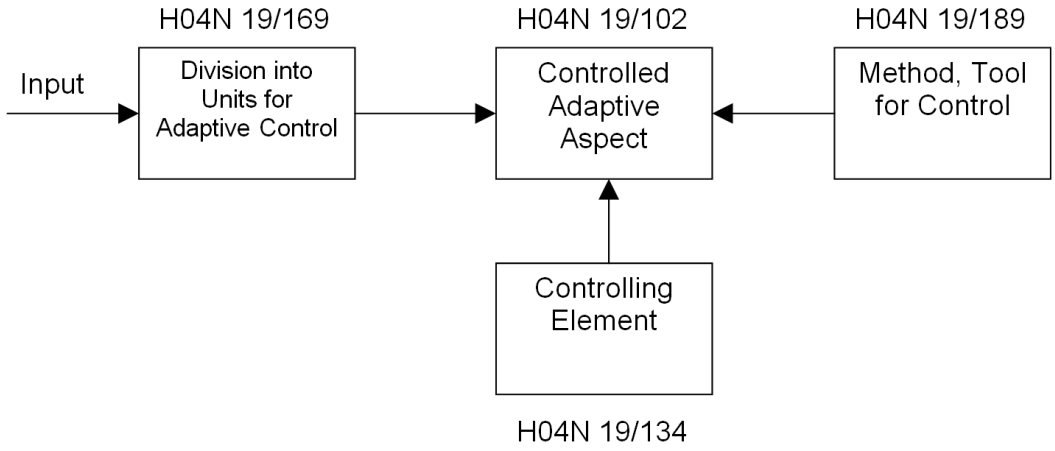

Informative references

Attention is drawn to the following places, which may be of interest for search:

Controlling the complexity of the video stream at the transmitter side, e.g. by scaling the resolution or bitrate of the video stream	H04N 21/2662
Content or additional data management, e.g. controlling the complexity of the video stream at the receiver side	H04N 21/462

H04N 19/102

characterised by the element, parameter or selection affected or controlled by the adaptive coding

Definition statement

This subgroup covers:

The definition of the element, parameter or selection, which is affected by the adaptive coding, wherein element is to be understood as a functional block or process in the digital video compressor or decompressor.

H04N 19/105

Selection of the reference unit for prediction within a chosen coding or prediction mode, e.g. adaptive choice of position and number of pixels used for prediction

Definition statement

This subgroup covers:

The selection of the reference unit (as contained e.g. in the memories in the figure below) for prediction within a chosen coding or prediction mode, e.g.:

- weighted prediction
- adaptive choice of position and number of pixels used for prediction
- choice between different motion estimators or compensators (e.g. between diamond search and full search, between global and local motion compensation) skip mode, merge mode
- adaptive choice of the reference frame or block in predictive encoding, e.g. spatial, temporal, interlayer or interview compensation.
- adaptive reference picture list management

References relevant to classification in this subgroup

This subgroup does not cover:

Non-adaptive reference picture list management	H04N 19/50

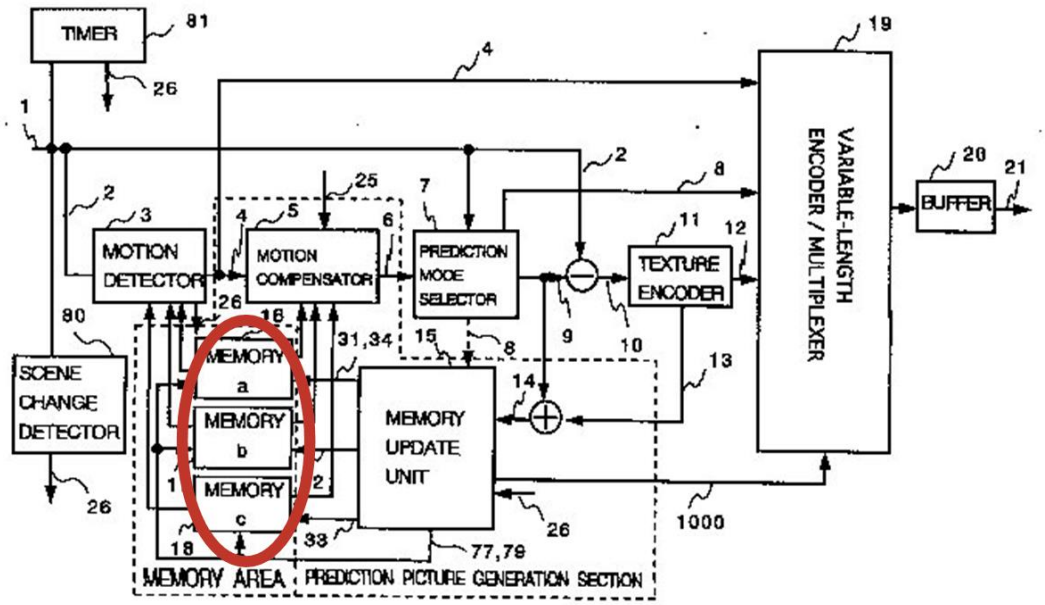

Informative references

Attention is drawn to the following places, which may be of interest for search:

Multiple frame prediction	H04N 19/573
Bidirectional image interpolation, B-frames	H04N 19/577
Long-term prediction	H04N 19/58

H04N 19/107

between spatial and temporal predictive coding, e.g. picture refresh

Definition statement

This subgroup covers:

The selection between spatial and temporal predictive coding, e.g. picture refresh by insertion of an intra-coded frame, as e.g. periodically or at scene change, or decision among intra-mode and inter-mode as in the figure.

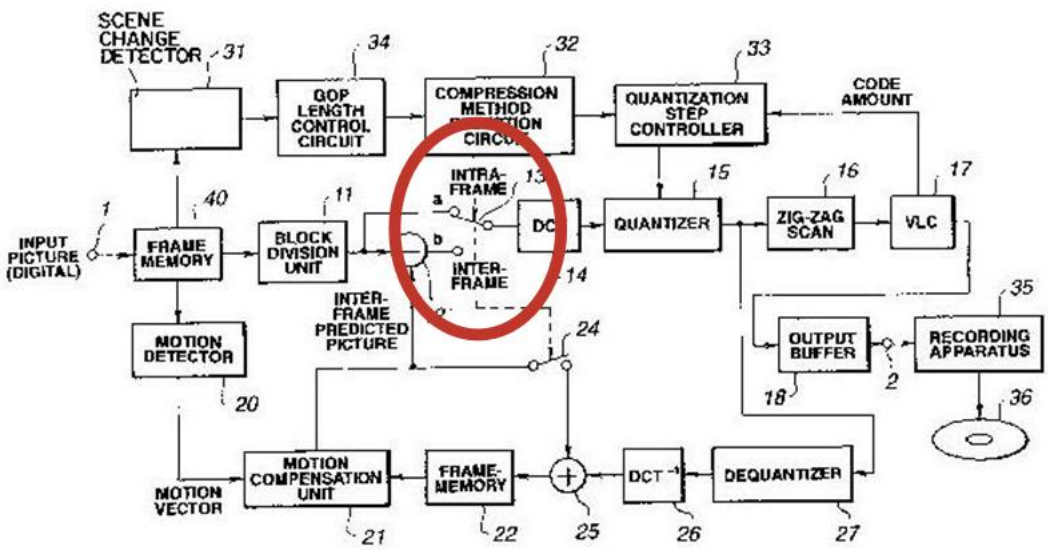

Glossary of terms

In this subgroup, the following terms (or expressions) are used with the meaning indicated:

Intra-frame, I-frame	Frame coded with spatial prediction
Inter-frame, P-frame	Frame coded with temporal prediction in one temporal direction
Bidirectional-frame, B-frame	Frame coded with temporal prediction in both temporal directions
Anchor frame	A frame usable for prediction of other frames, i.e. an intra-frame or an inter-frame

H04N 19/109

among a plurality of temporal predictive coding modes

Definition statement

This subgroup covers:

The selection among a plurality of temporal predictive coding modes, e.g. a plurality of inter-prediction modes as in the standard H.263 or H.264.

H04N 19/11

among a plurality of spatial predictive coding modes

Definition statement

This subgroup covers:

The selection among a plurality of spatial predictive coding modes, e.g. a plurality of intra-prediction modes as the directional block intra-prediction modes in the standard H.264 shown below.

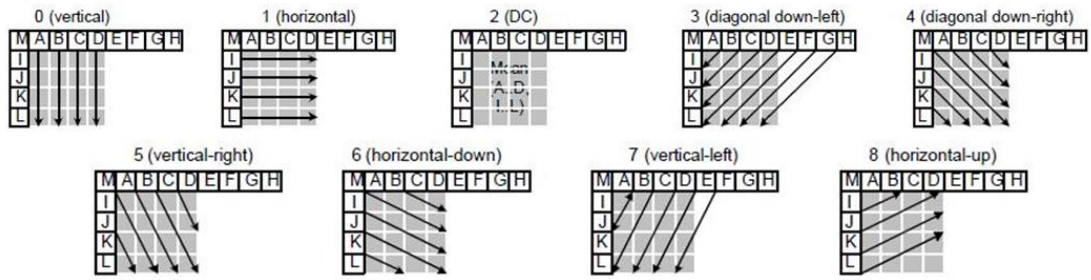

H04N 19/112

according to a given display mode, e.g. for interlaced or progressive display mode

Definition statement

This subgroup covers:

The selection of a given display mode, e.g. interlaced or progressive as in the figure (as in MBAFF of H.264), and of the associated coding or prediction mode.

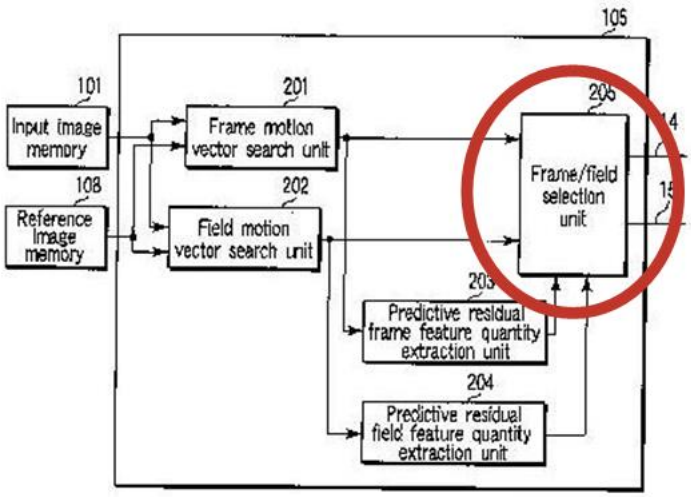

Informative references

Attention is drawn to the following places, which may be of interest for search:

Conversion of standards in television systems, e.g. at the pixel level of a picture from interlaced to progressive display mode and vice versa	H04N 7/01

Glossary of terms

In this subgroup, the following terms (or expressions) are used with the meaning indicated:

MBAFF	Macroblock-adaptive frame-field coding

H04N 19/114

Adapting the group-of-pictures [GOP] structure, e.g. number of B-frames between two anchor frames

Definition statement

This subgroup covers:

- The adaptation of the length or the composition of a GOP, e.g. by changing the number of B-frames between anchor frames or by changing the number of P-frames between I-frames.

- The selection of the structure of a group-of-pictures [GOP], e.g. of the number of P-frames, B-frames between two anchor frames, e.g. as in the figure below.

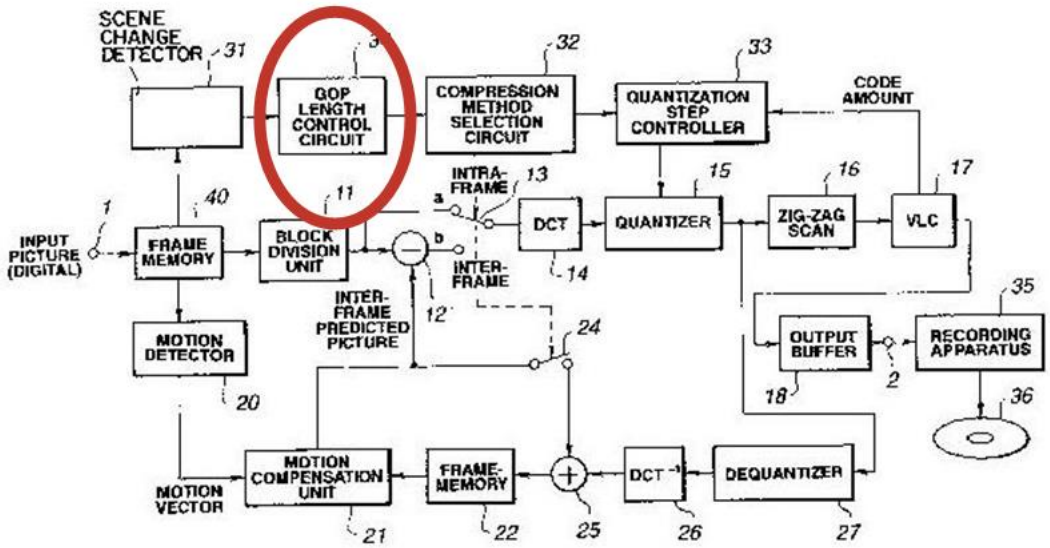

References relevant to classification in this subgroup

This subgroup does not cover:

The selection between spatial and temporal predictive coding	H04N 19/107

Informative references

Attention is drawn to the following places, which may be of interest for search:

Bidirectional image interpolation, B-frames	H04N 19/577

Glossary of terms

In this subgroup, the following terms (or expressions) are used with the meaning indicated:

Group-of-pictures	A group of successive pictures forming a logical unit within a coded video sequence in H.26x and MPEG standards.
Open GOP	A GOP which uses referenced pictures from the previous GOP at the current GOP boundary.

Closed GOP	A GOP that uses no referenced pictures from the previous GOP at the current GOP boundary (e.g. the classic GOP starting with an I frame).

Synonyms and Keywords

In patent documents the following abbreviations are often used:

GOF	Group of frames.
GOP	Group of pictures.

H04N 19/115

Selection of the code volume for a coding unit prior to coding

Definition statement

This subgroup covers:

The selection of the target rate or code volume assigned to a coding unit before coding the unit itself, e.g. to a picture or a group-of-pictures, as done within the rate controller in the figure below, or selection of frame rate.

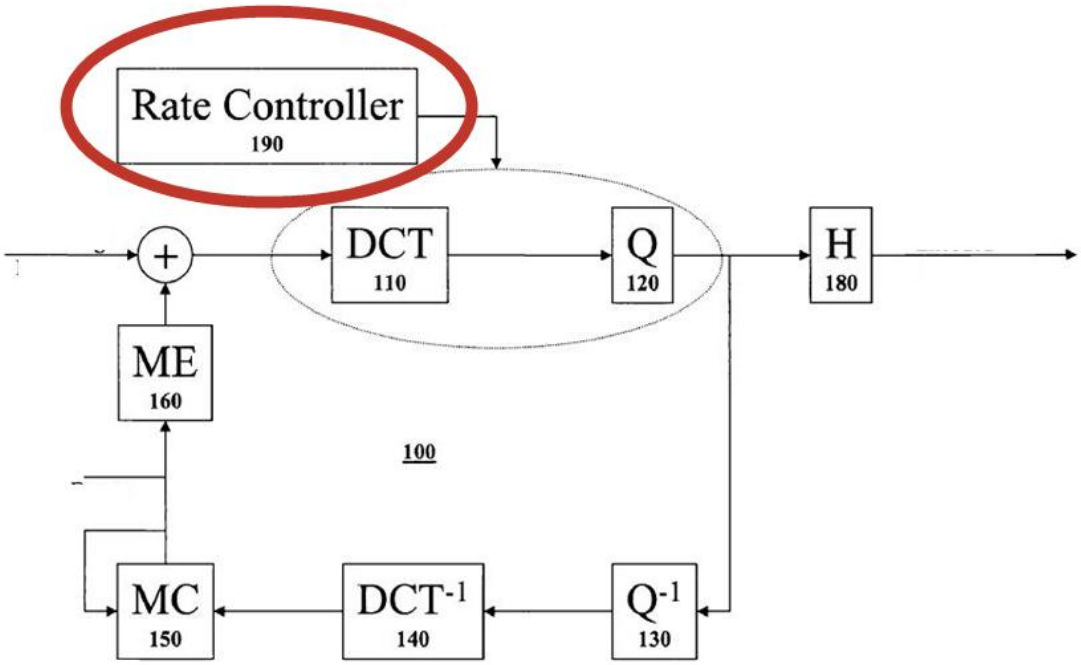

Informative references

Attention is drawn to the following places, which may be of interest for search:

Data rate or code amount at the encoder output	H04N 19/146

H04N 19/117

Filters, e.g. for pre-processing or post-processing

Definition statement

This subgroup covers:

Subject matter wherein the filtering is required to be part of an adaptive coding process, e.g. quantization controlling the filtering process, adaptive switching function after filtering process, optional filtering characteristics, adaptive selection of a filter type or of filter parameters, like strength and taps, as within the filter indicated in the figure below in function of a threshold determination.

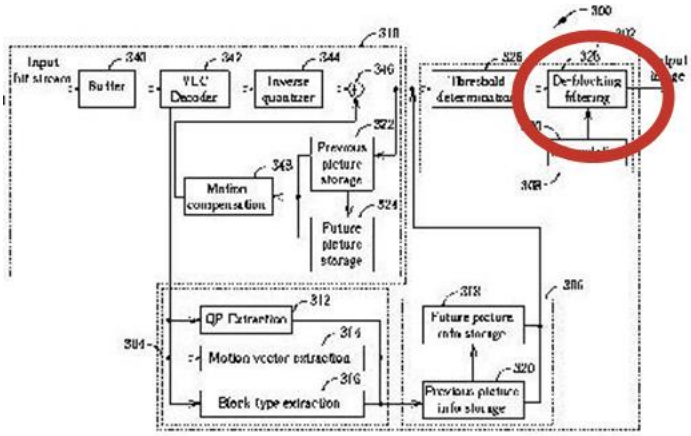

References relevant to classification in this subgroup

This subgroup does not cover:

Sub-band based transform characterised by filter definition or implementation details	H04N 19/635

Informative references

Attention is drawn to the following places, which may be of interest for search:

Image enhancement or restoration by use of local operators	G06T5/20
Impedance networks; Resonators	H03H
Details of filtering operations specially adapted for video compression and not necessarily of adaptive nature	H04N 19/80
Pre-processing or post-processing specially adapted for video compression	H04N 19/85

H04N 19/119

Adaptive subdivision aspects, e.g. subdivision of a picture into rectangular or non-rectangular coding blocks

Definition statement

This subgroup covers:

- Adaptive segmentation aspects during video compression, e.g. ROI segmentation.
- The selection of the subdivision of a picture into coding blocks, i.e. the determination of the grid of blocks covering a picture.

- The selection may involve the shape, e.g. rectangular or non-rectangular, or the size of the blocks, e.g. in the standard H.264 with selection among 4 x 4, 4 x 8, 8 x 4, 8 x 8 pixel block sizes as shown in the figures below.

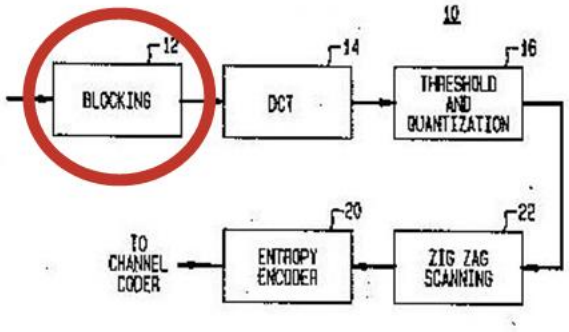

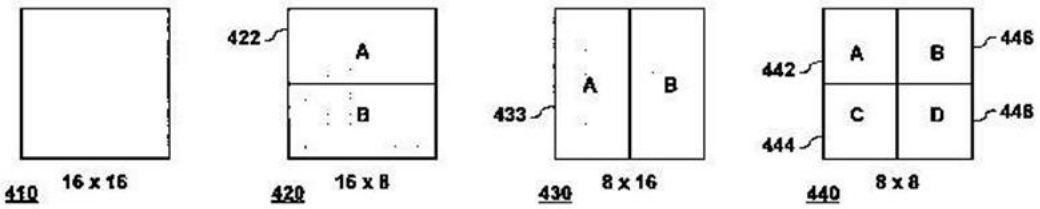

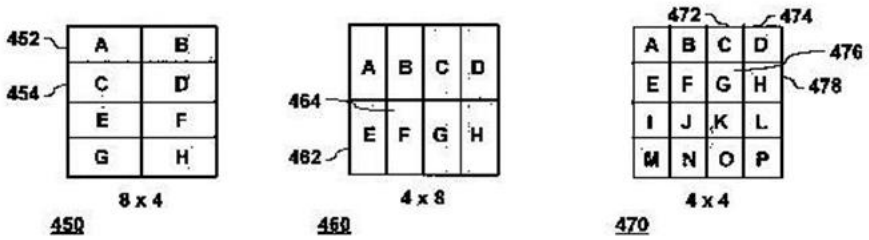

Glossary of terms

In this subgroup, the following term is used with the meaning indicated:

Macroblock	A MPEG coding unit including 16 x 16 pixels subdivided into four 8 x 8 blocks.

Synonyms and Keywords

In patent documents the following words "block", "sub-block", "tile" are often used as synonyms.

In patent documents the word "tile" is often used in the context of the standard JPEG 2000 and of transform coding of static images.

H04N 19/12

Selection from a plurality of transforms or standards, e.g. selection between discrete cosine transform [DCT] and sub-band transform or selection between H.263 and H.264

Definition statement

This subgroup covers:

Selection from a plurality of alternative compression algorithms within a video compressor, e.g.

- Selection among discrete cosine transforms [DCT] and subband transforms.
- Selection from a plurality of video compression standards, e.g. selection among H.263 and H.264, selection among MPEG-2 and MPEG-4.
- Selection between lossy and lossless compression.
- Transform skip mode (cf., hevc).

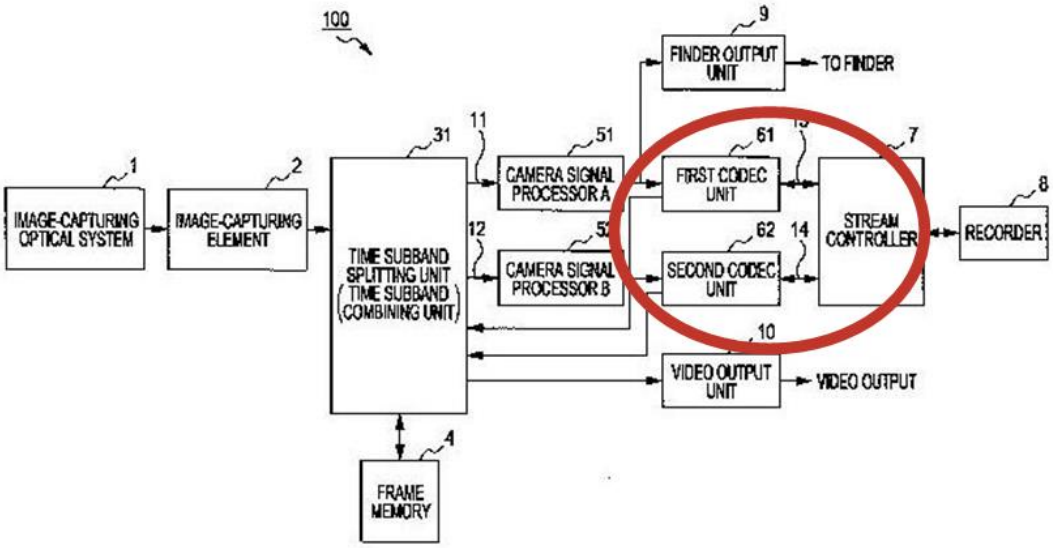

Informative references

Attention is drawn to the following places, which may be of interest for search:

Video compression based on transform coding	H04N 19/60
Special coding techniques and algorithms	H04N 19/90

H04N 19/122

Selection of transform size, e.g. 8x8 or 2x4x8 DCT; Selection of sub-band transforms of varying structure or type

Definition statement

This subgroup covers:

The selection of transform size within the same predetermined transform algorithm, e.g. 4x4 or 8x8 DCT as in the figure below, or 8x8 or 2x4x8 DCT for frame-based and for field-based block compression, respectively, or sub-band transforms of varying hierarchical structure or type.

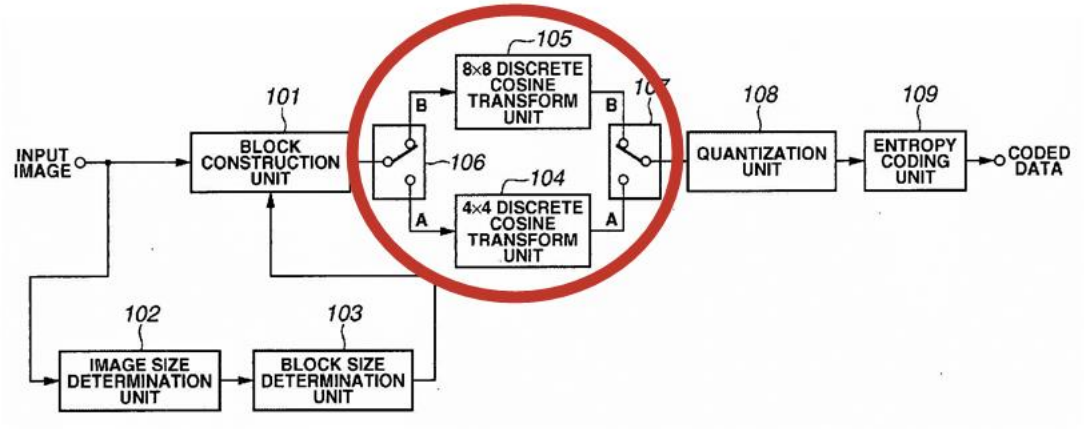

H04N 19/124

Quantisation

Definition statement

This subgroup covers:

Subject matter wherein specific details of a controlled quantiser is provided, e.g. frame type or input video characteristics controlling the quantiser, adaptive quantisation based on output or transmission buffer fullness, choice between fine or coarse quantisation.

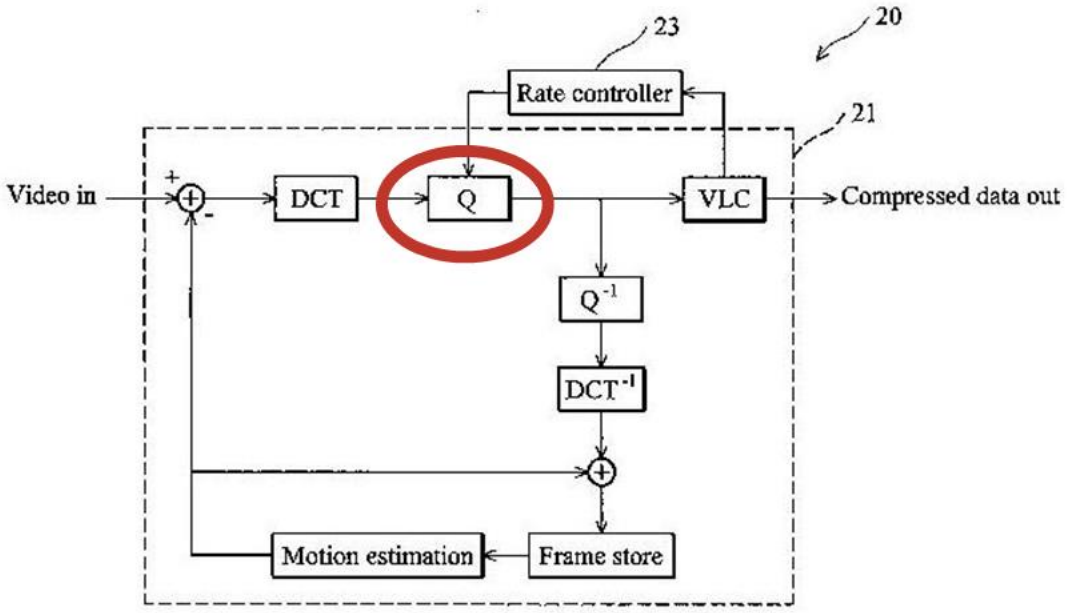

H04N 19/126

Details of normalisation or weighting functions, e.g. normalisation matrices or variable uniform quantisers

Definition statement

This subgroup covers:

Special algorithms used for quantisation in video compression, e.g. the choice of normalisation parameters or matrices, details of variable uniform quantisers or the calculation of quantisation weighting matrices.

H04N 19/127

Prioritisation of hardware or computational resources

Definition statement

This subgroup covers:

The control of resource allocation or assignment (e.g. CPU time, memory, allocation of digital processing units, workload distribution among processors), e.g. skipping of encoding or decoding steps or switching off computing or hardware units, like e.g. motion estimation/compensation or transform units.

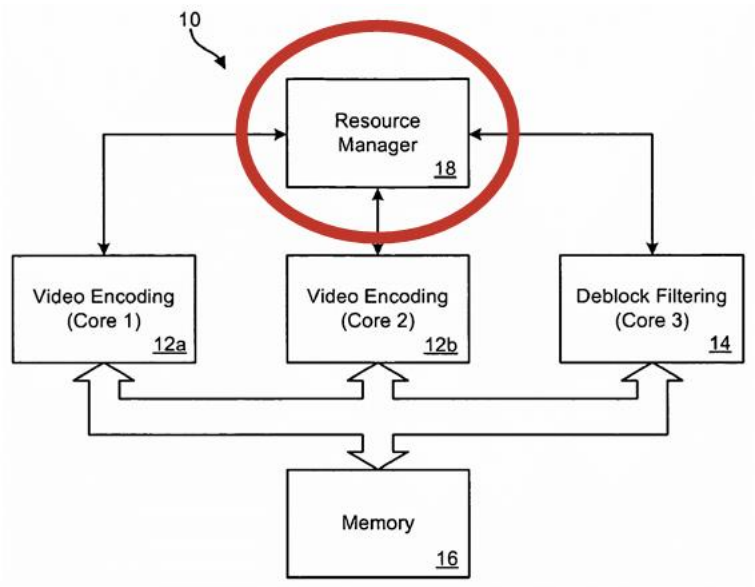

Informative references

Attention is drawn to the following places, which may be of interest for search:

Filtering control	H04N 19/117
Sampling, masking or truncation of coding units	H04N 19/132
Availability of hardware or computational resources, e.g. adapting coding based on assigned resources	H04N 19/156
Implementation details or hardware specially adapted for video compression or decompression	H04N 19/42

H04N 19/129

Scanning of coding units, e.g. zig-zag scan of transform coefficients or flexible macroblock ordering [FMO]

Definition statement

This subgroup covers:

The adaptation of the scanning of coding units, e.g. the choice of a zig-zag scan of transform coefficients in a transform compressor, as in the figure, or the use of flexible macroblock ordering [FMO].

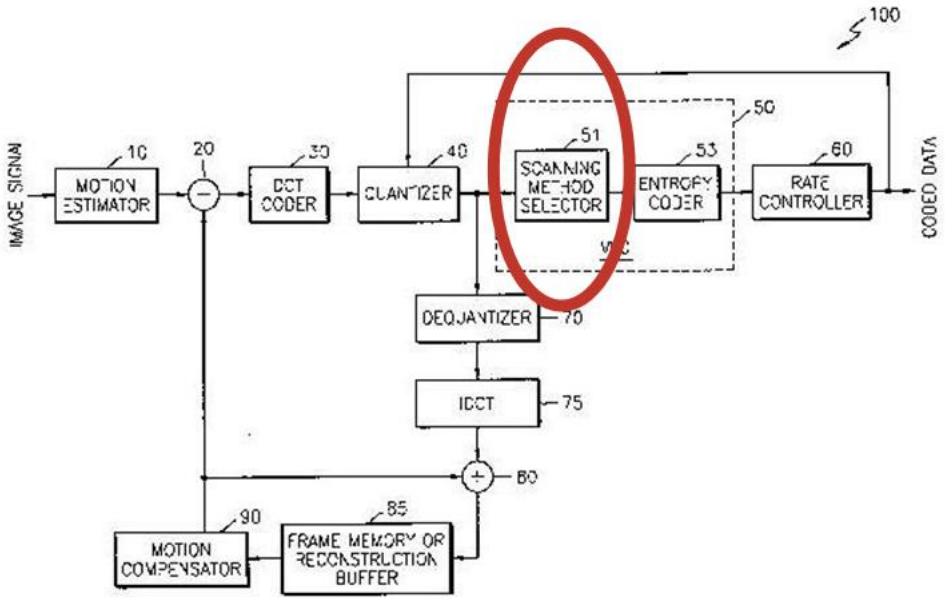

Informative references

Attention is drawn to the following places, which may be of interest for search:

Definition of the coding unit	H04N 19/169
Video coding involving rearrangement of data among different coding units	H04N 19/88

H04N 19/13

Adaptive entropy coding, e.g. adaptive variable length coding [AVLC] or context adaptive binary arithmetic coding [CABAC]

Definition statement

This subgroup covers:

Subject matter wherein the entropy coding is adapted, e.g. frame type determining the coding table, CABAC, CAVLC, adaptive Huffman coding, choosing among different VLC methods for coding as in the figure.

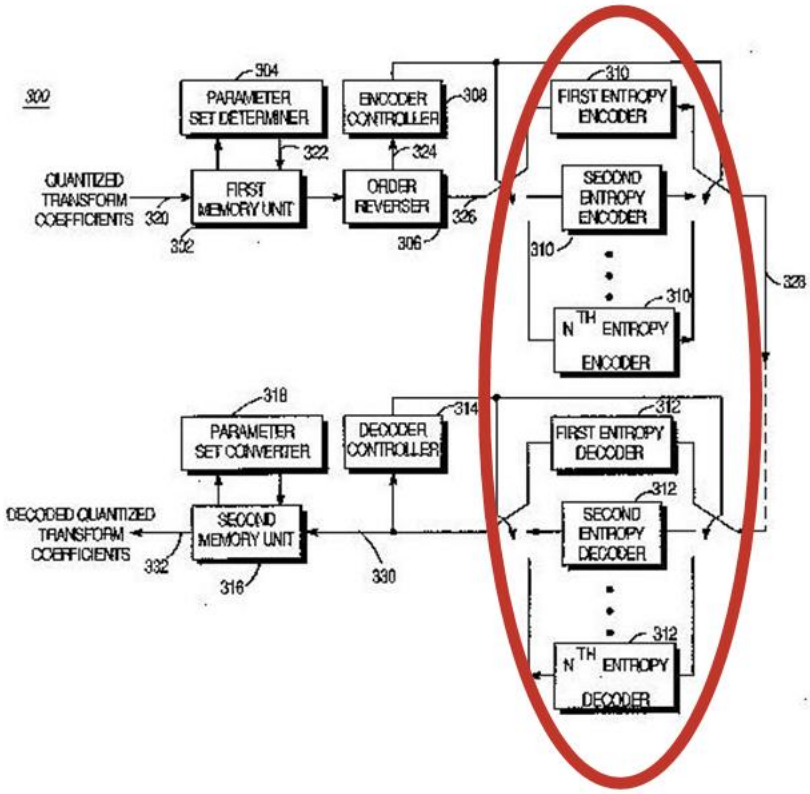

Informative references

Attention is drawn to the following places, which may be of interest for search:

Conversion to or from variable length codes in general	H03M 7/40
Conversion to or from run-length codes in general	H03M 7/46
Non-adaptive entropy coding for video compression	H04N 19/91
Non-adaptive run-length coding for video compression	H04N 19/93

Synonyms and Keywords

In patent documents the following abbreviations are often used:

VLC	Variable Length Coding
CABAC	Context-Adaptive Binary Arithmetic Coding
CAVLC	Context-Adaptive Variable Length Coding

H04N 19/132

Sampling, masking or truncation of coding units, e.g. adaptive resampling, frame skipping, frame interpolation or high-frequency transform coefficient masking

Definition statement

This subgroup covers:

Adaptive sampling, masking or truncation of coding units, e.g. adaptive resampling, frame skipping, frame interpolation or high frequency transform coefficient masking, i.e. suppression or setting to zero, macroblock skipping, as in the figure.

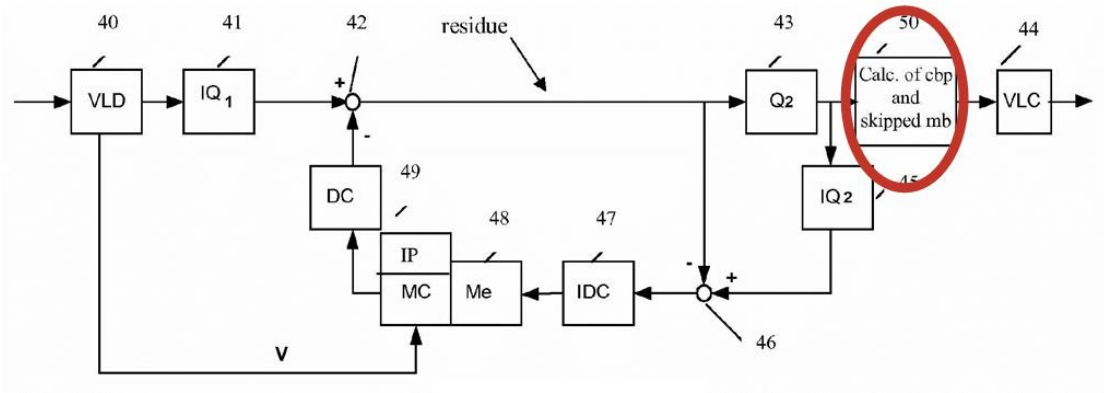

Informative references

Attention is drawn to the following places, which may be of interest for search:

Adaptive prioritisation of hardware or computational resources	H04N 19/127
Definition of the coding unit	H04N 19/169
Temporal sampling or interpolation for video coding	H04N 19/587
Spatial sampling or interpolation for video coding	H04N 19/59

H04N 19/134

characterised by the element, parameter or criterion affecting or controlling the adaptive coding

Definition statement

This subgroup covers:

The definition of an element, a parameter or criterion, which exercises the control of an adapted element or selection as classified in H04N 19/102 in the adaptive coding, wherein element is to be understood as a functional block or process in the digital video compressor or decompressor.

H04N 19/137

Motion inside a coding unit, e.g. average field, frame or block difference

Definition statement

This subgroup covers:

Determination of motion inside a coding unit, e.g. amount of temporal prediction errors, such as average difference calculated on a field, on a frame or on a block in two different time instants.

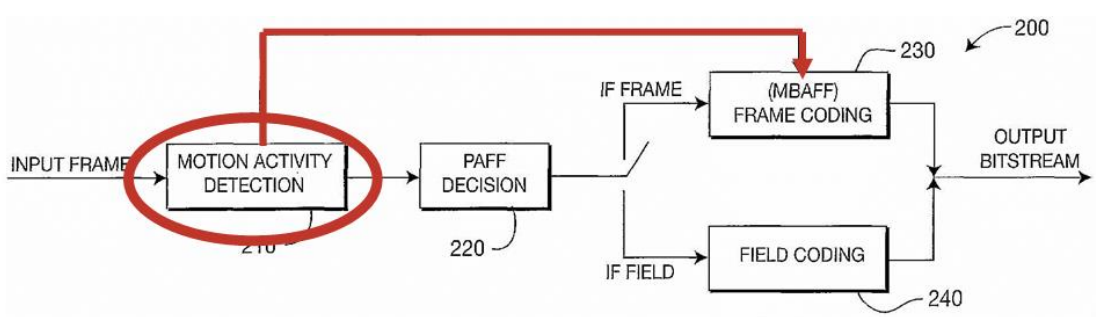

Informative references

Attention is drawn to the following places, which may be of interest for search:

Analysis of motion in general	G06T 7/20

Motion estimation or compensation for video compression	H04N 19/51

H04N 19/139

Analysis of motion vectors, e.g. their magnitude, direction, variance or reliability

Definition statement

This subgroup covers:

The measure of motion performed by explicitly using motion vectors (e.g magnitude, direction, variance, reliability measures).

Informative references

Attention is drawn to the following places, which may be of interest for search:

Analysis of motion in general	G06T 7/20
Motion estimation or compensation for video compression	H04N 19/51

H04N 19/14

Coding unit complexity, e.g. amount of activity or dege presence estimation

Definition statement

This subgroup covers:

Determination of coding unit complexity, e.g. by means of an activity detection, as in the figure below by means e.g. of flatness detection or energy of transform coefficients, by means of the detection of edge presence or by means of determination of the amount of spatial prediction error.

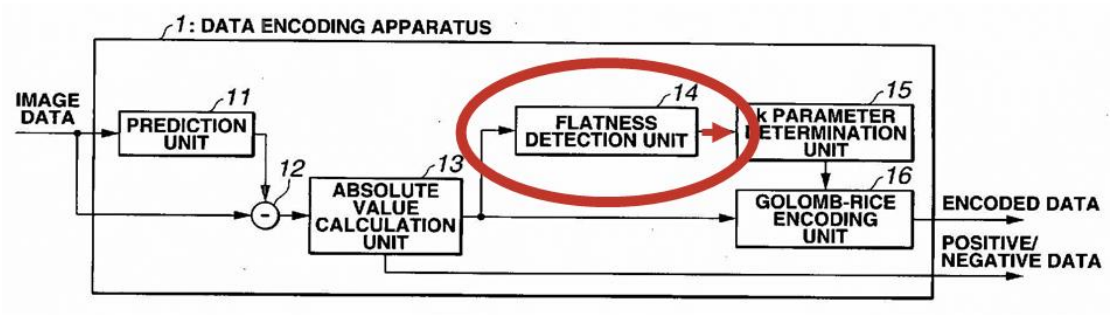

References relevant to classification in this subgroup

This subgroup does not cover:

Measure of complexity defined by data rate or code amount at the encoder output	H04N 19/146

H04N 19/142

Detection of scene cut or scene change

Definition statement

This subgroup covers:

The adaptive control of the video compression in response to detected scene cut or change.

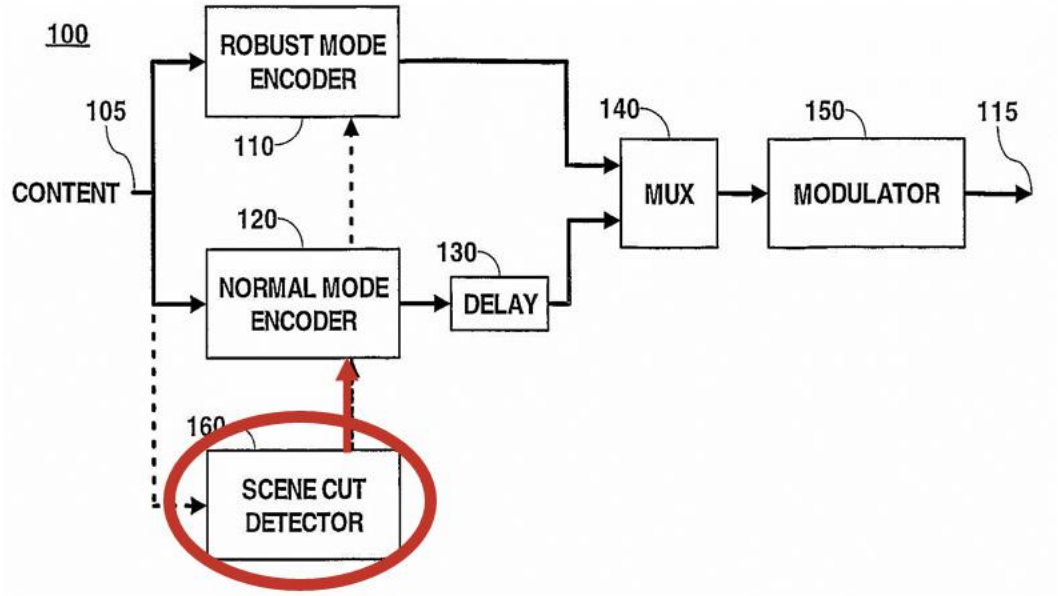

Informative references

Attention is drawn to the following places, which may be of interest for search:

Picture signal circuitry for video frequency region, e.g. scene change detection in television systems	H04N 5/14
Methods involving scene cut or scene change detection in combination with video compression	H04N 19/87

H04N 19/146

Data rate or code amount at the encoder output

Definition statement

This subgroup covers:

The adaptive control of video compression by using information about the data rate or code amount at the encoder output.

Informative references

Attention is drawn to the following places, which may be of interest for search:

Adaptation of the selection of the code volume for a coding unit prior to coding	H04N 19/115

H04N 19/147

according to rate-distortion criteria

Definition statement

This subgroup covers:

The adaptation of encoding as a function of data rate or code amount determined according to rate-distortion criteria, e.g. as a function of a cost function.

References relevant to classification in this subgroup

This subgroup does not cover:

Rate distortion as a criterion for motion estimation	H04N 19/567

Informative references

Attention is drawn to the following places, which may be of interest for search:

Adaptation based on measured or subjectively estimated visual quality after decoding	H04N 19/154
Adaptation using optimisation based on Lagrange multipliers	H04N 19/19

Glossary of terms

In this subgroup, the following terms (or expressions) are used with the meaning indicated:

Cost function	A function of target parameters, as output rate and quality measurement after decoding (e.g. distortion).

H04N 19/149

by estimating the code amount by means of a model, e.g. mathematical model or statistical model

Definition statement

This subgroup covers:

The estimation of the code amount by means of a model, e.g. a mathematical model or a statistical model, as done in the MPEG-2 Test Model 5 (TM5)

Informative references

Attention is drawn to the following places, which may be of interest for search:

Methods or arrangements, for coding, decoding, compressing or decompressing digital video signals using adaptive coding characterised by the adaptation method, adaptation tool or adaptation type used for the adaptive coding	H04N 19/189

H04N 19/15

by monitoring actual compressed data size at the memory before deciding storage at the transmission buffer

Definition statement

This subgroup covers:

The estimation of the code amount by off-line encoding, i.e. encoding without storing at the transmission buffer, e.g. by means of a separate encoder as in the figure below, and counting of the actual data size of the compressed elementary stream.

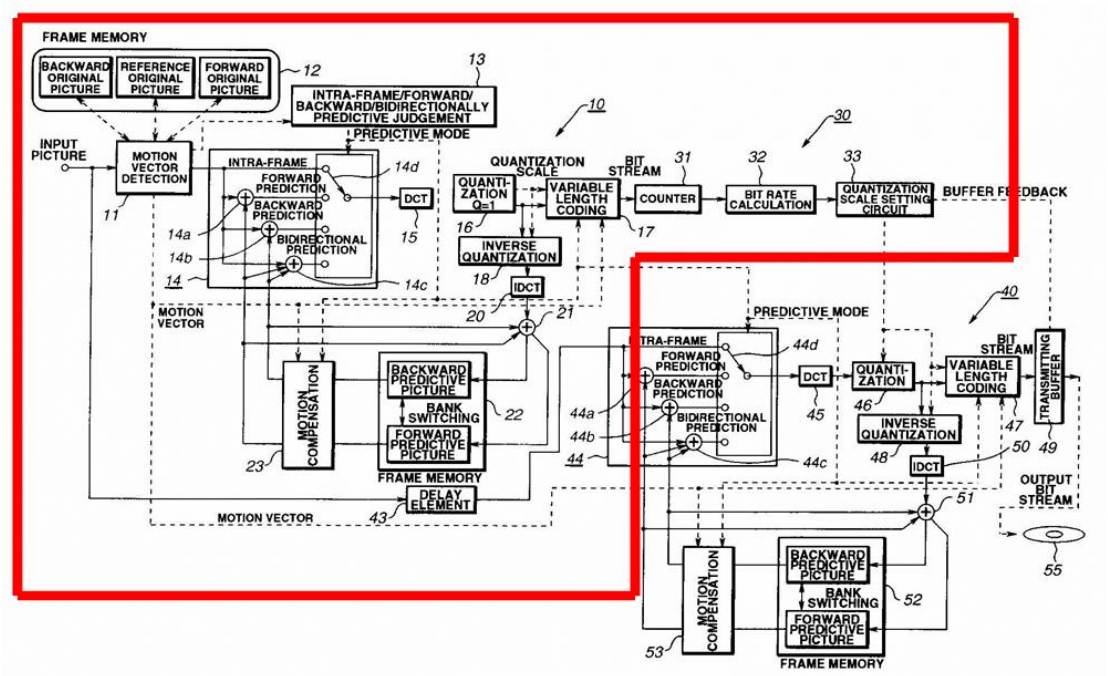

Informative references

Attention is drawn to the following places, which may be of interest for search:

Data rate or code amount at the encoder output by estimating the code amount by means of a model	H04N 19/149

H04N 19/152

by measuring the fullness of the transmission buffer

Definition statement

This subgroup covers:

The control of the video coding by using the measurement of fullness in the transmission buffer, where the buffer may be implicit, as e.g. in the cases of a storage medium, a memory, a physical channel having a certain bit capacity.

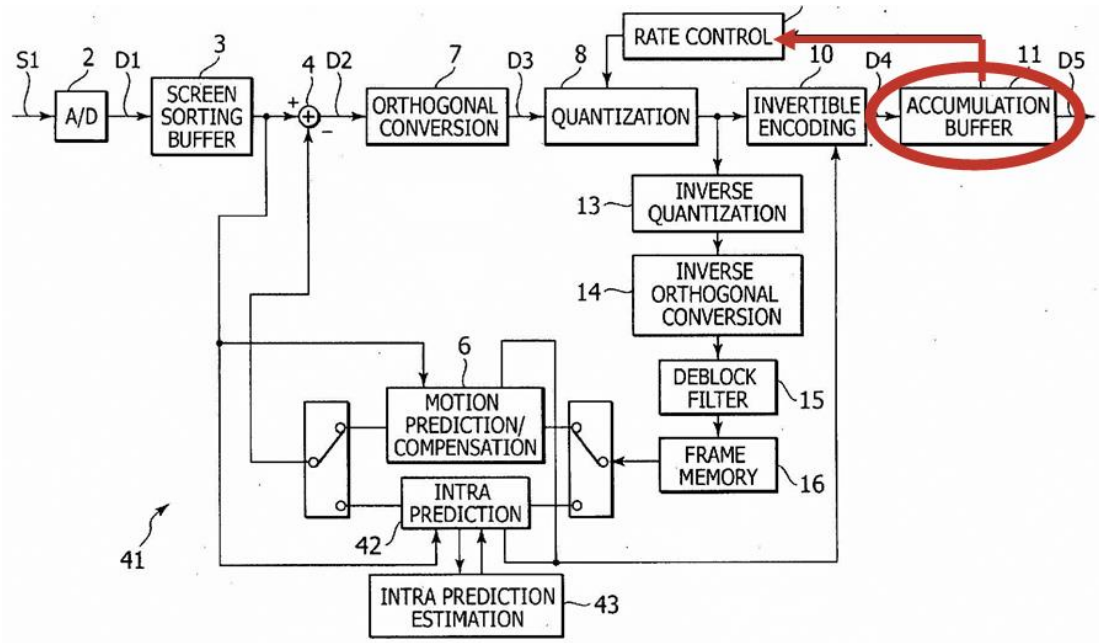

Informative references

Attention is drawn to the following places, which may be of interest for search:

Processing of video elementary streams	H04N 21/234

H04N 19/154

Measured or subjectively estimated visual quality after decoding, e.g. measurement of distortion

Definition statement

This subgroup covers:

The control of video coding by means of quality after decoding, as measured, e.g. by means of distortion measurement, or as estimated by means of subjective tests.

This subgroup should be assigned, when quality is not particularly linked to output bit-rate.

References relevant to classification in this subgroup

This subgroup does not cover:

Use of rate-distortion criteria	H04N 19/147

Informative references

Attention is drawn to the following places, which may be of interest for search:

Data rate or code amount at the encoder output, e.g. where the quality measure is directly linked to output bit-rate	H04N 19/146

H04N 19/156

Availability of hardware or computational resources, e.g. encoding based on power-saving criteria

Definition statement

This subgroup covers:

The control of video coding in dependence of the availability of hardware or computational resources, e.g. encoding based on power-saving criteria, time constrained encoding.

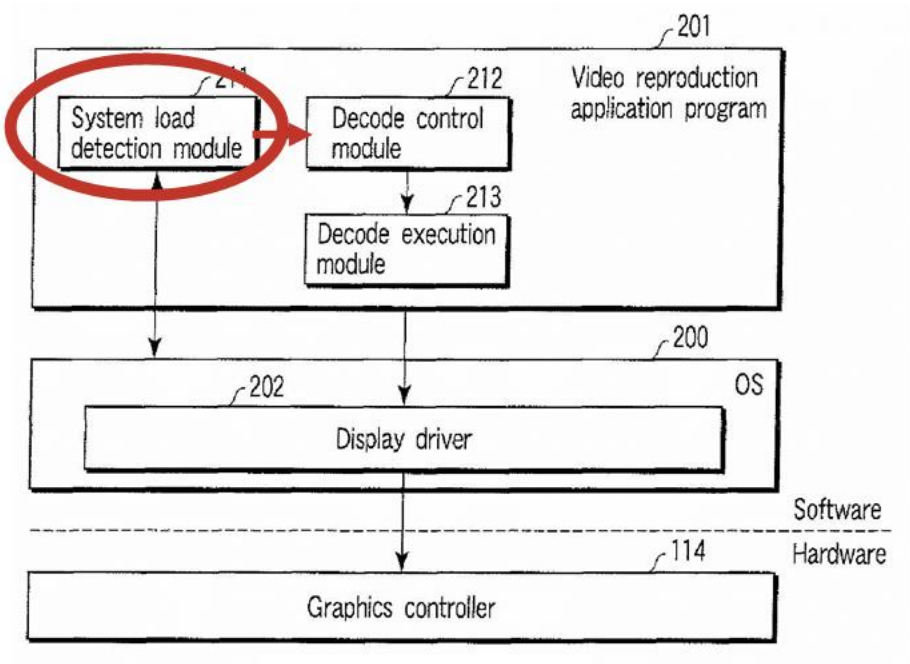

Informative references

Attention is drawn to the following places, which may be of interest for search:

Prioritisation of hardware or computational resources, e.g. adaptively controlling the assignment of coding resources	H04N 19/127
implementation details or hardware specially adapted for video compression or decompression	H04N 19/42

H04N 19/157

Assigned coding mode, i.e. the coding mode being predefined or preselected to be further used for selection of another element or parameter

Definition statement

This subgroup cover:

- The control of video coding as a function of the coding mode assigned to the unit to be coded, i.e. the coding mode of the unit to be coded is predefined or preselected.

- The subgroup H04N 19/159 covers the case that the coding mode is the prediction type used for the unit to be coded, e.g. intra, inter or bidirectional, as in the figure directly below.

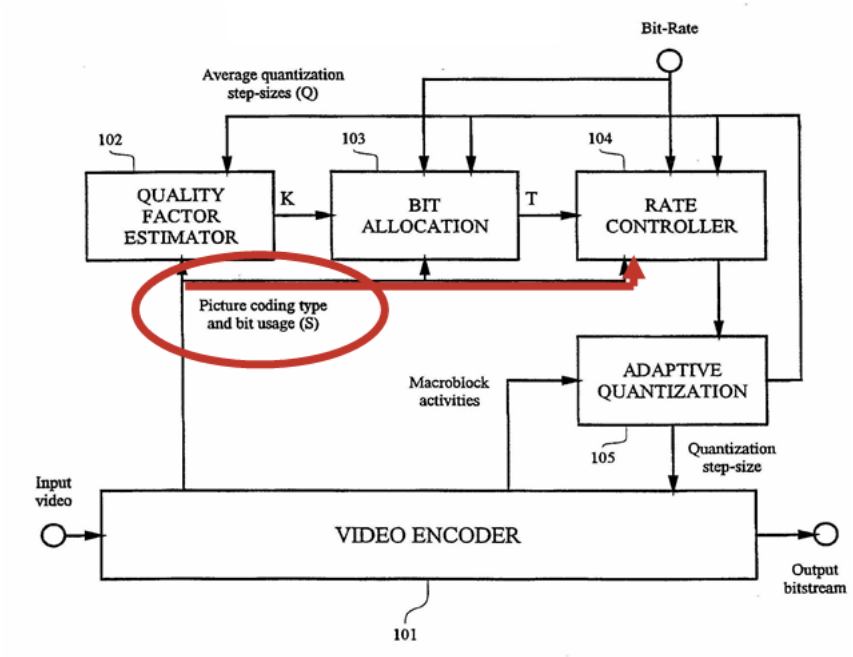

The subgroup H04N 19/16 covers the case that the assigned coding mode is for a given display mode, e.g. for interlaced or progressive display mode, as in the figure directly below.

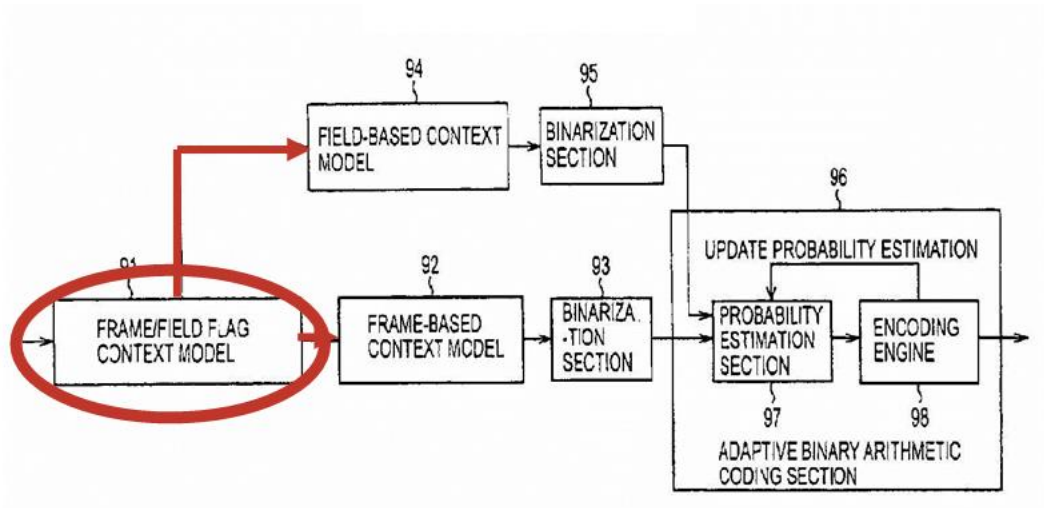

H04N 19/162

User input

Definition statement

This subgroup covers:

The control of the video encoding by means of the input from a user, e.g. from a user interface.

H04N 19/164

Feedback from the receiver or from the transmission channel

Definition statement

This subgroup covers:

- The control of encoding the elementary video stream as a function of the feedback from the client/receiver or from the transmission channel, as e.g. in the figure below.
- The subgroup H04N 19/166 covers in particular the case that the feedback contains a certain amount of transmission errors, e.g. by means of a bit- or packet-error-rate detection.

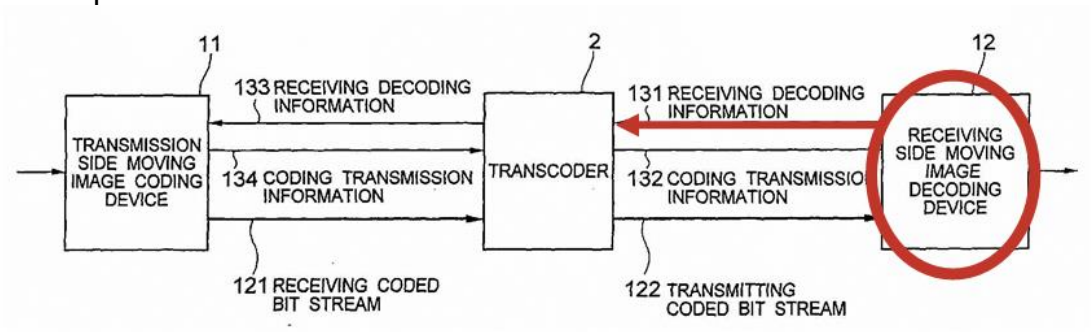

Relationship between large subject matter areas

The control of encoding as a function of the feedback from the receiver or from the transmission channel in a general telecommunication context is covered in H04L and H04W.

Informative references

Attention is drawn to the following places, which may be of interest for search:

Control signalling related to video distribution between receiver, transmitter, and network components	H04N 21/63
Transmission of management data between client and server	H04N 21/65
Embedding additional information in the video signal during the compression process	H04N 19/46

Synonyms and Keywords

In patent documents the following abbreviations are often used:

BER	Bit Error Rate
PER	Packet Error Rate

H04N 19/167

Position within a video image, e.g. region of interest [ROI]

Definition statement

This subgroup covers:

- The control of the video encoding as a function of a coding unit's position within a video image, e.g. the adoption of coding parameters adapted to a region of interest, different coding of foreground and of background, different coding at the image centre and at the image borders.
- Adaptive video coding depends generally indirectly on the position within an image, e.g. coding parameters may be varied across coding units, e.g. blocks.
- The present subgroup covers the case when the spatial position within the image is explicitly and directly defined as a criterion.

Informative references

Attention is drawn to the following places, which may be of interest for search:

Image region as coding unit	H04N 19/17

Synonyms and Keywords

In patent documents the following abbreviations are often used:

ROI	Region Of Interest

H04N 19/169

characterised by the coding unit, i.e. the structural or semantic portion of the video signal being the object or the subject of the adaptive coding

Definition statement

This subgroup covers:

Definition of the video coding units that are controlled by or controlling the adaptive coding. The subgroups of H04N 19/169 define explicitly which coding units are meant.

Informative references

Attention is drawn to the following places, which may be of interest for search

with respect to H04N 19/179, referring to scene or shot as coding unit:

Methods involving scene cut or scene change detection in combination with video compression	H04N 19/87

with respect to H04N 19/187, referring to scalable layer as coding unit:

Hierarchical and scalability techniques	H04N 19/30

Glossary of terms

In this subgroup, the following terms (or expressions) are used with the meaning indicated:

(Video) Object	MPEG-4 object, i.e. a region of the image with arbitrary shape
Slice	A set of blocks within an image, e.g. a line of blocks.
Block	A rectangular matrix of pixels.
Macroblock	MPEG coding unit formed by four blocks arranged as a 2 x 2 matrix.
Group of pictures	MPEG coding unit formed by a set of consecutive pictures.
Scalable video layer	Coding unit of a scalable encoded video elementary stream

Synonyms and Keywords

In patent documents the following abbreviations are often used:

GOB	Group of Blocks
GOP	Group of Pictures
GOF	Group of Frames
FMO	H.264 Flexible Macroblock Ordering

In patent documents the following expressions: "slice" and "GOB"; "block" and "tile" are often used as synonyms.

H04N 19/17

The unit being an image region, e.g. an object

Definition statement

This subgroup covers:

Adaptive coding applied to regions of interest [ROI].

H04N 19/174

The unit being a slice, e.g. a line of blocks or a group of blocks

Definition statement

This subgroup covers:

Adaptive coding on any groups of blocks as long as these are linked to each other in a well-defined manner, such as slices in AVC and tiles in HEVC.

H04N 19/189

characterised by the adaptation method, adaptation tool or adaptation type used for the adaptive coding

Definition statement

This subgroup covers:

Special mathematical or algorithmic formulations for the methods or tools used for video coding adaptation.

Special rules of classification within this group

This group is residual with respect to its subgroups.

H04N 19/19

using optimization based on Lagrange multipliers

Definition statement

This subgroup covers:

The formulation in terms of optimisation based on Lagrange multiplier techniques, as e.g. in the cost function defined as C = R + LD, where R is the output rate, L is the Lagrange multiplier, and D is the distortion after decoding.

H04N 19/192

the adaptation method, adaptation tool or adaptation type being iterative or recursive

Definition statement

This subgroup covers:

- Iterative and recursive algorithms and techniques applied to the adaptation of video coding.
- The special case of two-pass or two-step algorithms are covered by H04N 19/194.

H04N 19/196

being specially adapted for the computation of encoding parameters, e.g. by averaging previously computed encoding parameters (H04N 19/513 takes precedence)

Definition statement

This subgroup covers:

Details of the mathematical laws or algorithms used for computation of encoding parameters (like e.g. quantisation step, coding mode), e.g. estimating a current encoding parameter by averaging previously computed encoding parameters, deriving the coding mode for the current coding unit from the coding mode of the neighbouring coding units. Neighbouring coding units may relate to views, layers, spatial or temporal neighbours.

References relevant to classification in this subgroup

This subgroup does not cover:

Formulations for processing of calculated motion vectors	H04N 19/513

Informative references

Attention is drawn to the following places, which may be of interest for search:

Formulations for initializing motion vector search	H04N 19/56

H04N 19/20

Methods or arrangements for coding, decoding, compressing or decompressing digital video signals using video object coding

Definition statement

This subgroup covers:

Details of object-based video coding, as e.g. according to the standard MPEG-4.

Informative references

Attention is drawn to the following places, which may be of interest for search:

Contour coding	G06T 9/20
Hierarchical and scalability techniques (cf. H04N 19/29)	H04N 19/30
Processing of video elementary streams in the server involving reformatting operations of video signals for distribution or compliance with end-user requests or end-user device requirements, e.g. by decomposing video signals into objects	H04N 21/2343
Processing of video elementary streams in the server, e.g. for generating or manipulating the scene composition of objects	H04N 21/234
Processing of video elementary streams in the client device, e.g. involving rendering scenes according to scene graphs	H04N 21/44

Glossary of terms

In this subgroup and in its subgroups, the following terms (or expressions) are used with the meaning indicated:

(Video) Object	MPEG-4 object, i.e. a region of the image with arbitrary shape
Alpha-plane	A discrete bitmap (generally binary) defining the part of a frame constituting a given object, e.g. in terms of the position of the pixels belonging to the object or in terms of the position of the blocks covering the object.
Sprite	A unified background image derived by compositing the backgrounds of the single frames of a video sequence, e.g. having a camera motion throughout a video segment (within e.g. a scene, a shot, a GOP, a sequence). It may be static or dynamic.

Scene description coding	The coded representation of the spatiotemporal positioning of audio-visual objects as well as their behaviour in response to interaction, as e.g. in the standard MPEG-4 Part 11.
Synthetic/natural hybrid coding	Part of the MPEG-4 standard relating to coding facial animation and mesh compression.
Synthetic picture component	A picture component that is coded by geometric modelling with synthesizing at reconstruction (e.g. avatar).
Natural picture component	A picture component that is coded "as it stands" without geometric modelling.

Synonyms and Keywords

In patent documents the following abbreviations are often used:

BIFS	BInary Format for Scenes
SNHC	Synthetic/Natural Hybrid Coding
VOL	Video Object Layer
VOP	Video Object Plane

In patent documents the following expressions "object", "video object", and "video object plane (VOP)" are often used as synonyms.

H04N 19/30

Methods or arrangements for coding, decoding, compressing or decompressing digital video signals using hierarchical techniques, e.g. scalability

Definition statement

This subgroup covers:

- Details of video coding, where the elementary video stream is coded so that it contains a hierarchy of different compressed representations of the same video sequence, wherein each representation may correspond e.g. to a different video resolution or video format. Layered coding is also covered here.
- The hierarchy may be incremental, as e.g. in scalable video coding (like the extension of the standard H.264 called Scalable Video Coding [SVC]).

References relevant to classification in this subgroup

This subclass does not cover:

Transform coding using sub-band based transform, e.g. wavelets	H04N 19/63

Informative references

Attention is drawn to the following places, which may be of interest for search:

Processing of video elementary streams in the server involving reformatting operations of video signals for distribution or compliance with end-user requests or end-user device requirements, e.g. by decomposing video signals into layers at the transmitter side	H04N 21/2343
Controlling the complexity of the video stream at the transmitter side, e.g. by scaling the resolution or bitrate of the video stream	H04N 21/2662
Processing of video elementary streams in the client device involving reformatting operations of video signals for household redistribution, storage of real-time display, e.g. by decomposing video signals into layers at the receiver side	H04N 21/4402
Content or additional data management, e.g. controlling the complexity of the video stream at the receiver side	H04N 21/462

Glossary of terms

In this subgroup and in its subgroups, the following terms (or expressions) are used with the meaning indicated:

Temporal scalability	Scalability in terms of frame rate, meaning that a given bit stream includes different sub-streams each with a different frame rate or sub-streams that, when combined, increase the output frame rate.
Spatial scalability	Scalability in terms of spatial video sampling rate or resolution (e.g. quantisation step size, pixel bit depth), meaning that a given bit stream includes different sub-streams each with a different frame size or resolution or sub-streams that, when combined, increase the output frame size or resolution.

H04N 19/31

in the temporal domain

Definition statement

This subgroup covers:

Performing hierarchical or layered coding by acting on temporal resolution, e.g. temporal scalability.

Informative references

Attention is drawn to the following places, which may be of interest for search:

Predictive coding using temporal sub-sampling or interpolation	H04N 19/587

H04N 19/33

in the spatial domain

Definition statement

This subgroup covers:

Performing hierarchical or layered coding by acting on spatial resolution, e.g. spatial scalability.

Informative references

Attention is drawn to the following places, which may be of interest for search:

Predictive coding involving spatial sub-sampling or interpolation	H04N 19/59

H04N 19/37

with arrangements for assigning different transmission priorities to video input data or to video coded data

Definition statement

This subgroup covers:

The preliminary organisation of the video elementary stream with assignment of different priorities or importance to data to be further transmitted, e.g. for transmission or dropping.

Informative references

Attention is drawn to the following places, which may be of interest for search:

Communication control characterised by a protocol, e.g. protocols for client-server architecture	H04L 29/06
Error resilience techniques for digital video coding involving data partitioning	H04N 19/66
Control signalling in networks for selective content distribution, e.g. multimode transmission	H04N 21/63

H04N 19/40

Methods or arrangements for coding, decoding, compressing or decompressing digital video signals using video transcoding, i.e. partial or full decoding of a coded input stream followed by re-encoding of the decoded output stream

Definition statement

This subgroup covers:

Transcoding of the elementary video stream at the level of digital video coding, i.e. partial or full decoding of a coded input stream and re-encoding of the decoded output stream.

Informative references

Attention is drawn to the following places, which may be of interest for search:

Information retrieval, e.g. distillation of HTML documents for optimising the visualization of content or computer file format conversion	G06F 17/30
Video standard conversion at the pixel level, e.g. for analog television	H04N 7/01
Video conference systems, e.g. reformatting video signals	H04N 7/15
Processing of video elementary streams at a server involving reformatting operations of video signals	H04N 21/2343
Processing of video elementary streams at a client device involving reformatting operations of video signals	H04N 21/4402
Communication protocols, e.g. transcoding therefor	H04L 29/06

H04N 19/42

characterised by implementation details or hardware specially adapted for video compression or decompression, e.g. dedicated software implementation (H04N 19/635 takes precedence)

Definition statement

This subgroup covers:

Implementation details or hardware specific for elementary video compression or decompression, e.g. dedicated software implementation, memory arrangements, parallel processing or hardware for motion estimation or compensation.

References relevant to classification in this subgroup

This subgroup does not cover:

Filter definition or implementation details for defining sub-band transforms	H04N 19/635

Informative references

Attention is drawn to the following places, which may be of interest for search:

Binary arithmetic	G06F 7/60
Execution of machine instructions	G06F 9/30

Pipelines	G06F 9/38
Resource allocation	G06F 9/50
Transfer of information, buses	G06F 13/00
Digital computing	G06F 17/00
Complex mathematical operations	G06F 17/10
Software or hardware implementations of Fourier, Walsh or analogous domain transformations	G06F 17/14
Decoder specific implementations	H04N 19/44

H04N 19/423

characterised by memory arrangements (H04N 19/433 takes precedence)

Definition statement

This subgroup and its subgroups cover:

- Details of memory arrangements or management specifically dedicated to video compression.
- The subgroup H04N 19/426 covers details of memory downsizing techniques.

References relevant to classification in this group

This subgroup does not cover:

Techniques for memory access in motion estimation or compensation	H04N 19/433

Informative references

Attention is drawn to the following places, which may be of interest for search:

Accessing, addressing or allocating within memory systems or architectures in general	G06F 12/00
Memory management for general purpose image data processing	G06T 1/60
Control arrangements or circuits for visual indicators common to cathode-ray tube indicators and other visual indicators, e.g. display memories	G09G 5/00
Static storage for general purpose data processing, e.g. memories, shift registers	G11C

H04N 19/44

Decoders specially adapted therefor, e.g. video decoders which are asymmetric with respect to the encoder

Definition statement

This subgroup covers:

Video decoders not symmetric with the corresponding encoders, i.e. decoding means or steps are not a mere reversal of the corresponding encoding means or steps, or specific hardware or software implementations details for the video decoder.

Informative references

Attention is drawn to the following places, which may be of interest for search:

Complex mathematical operations	G06F 17/10
Implementation details or hardware specific for video encoding and decoding	H04N 19/42

H04N 19/46

Methods or arrangements for coding, decoding, compressing or decompressing digital video signals for embedding additional information in the video signal during the compression process

Definition statement

This subgroup covers:

- Subject matter wherein additional information is provided and transmitted within the compressed video signal, e.g. flag information or ancillary encoding information without details of syntax related data structure, watermarking.
- Encoding parameters are generally included for transmission in the video elementary stream.
- This group or its subgroups should be assigned if special details are provided about their insertion for transmission in the stream, e.g. compression is covered by H04N 19/463.

References relevant to classification in this subgroup

This subgroup does not cover:

Motion vector coding and transmission	H04N 19/517
Insertion of resynchronisation markers into the bitstream	H04N 19/68
Syntax aspects related to video coding	H04N 19/70

H04N 19/467

characterised by the embedded information being invisible, e.g. watermarking

Definition statement

This subgroup covers:

Details of the embedding of additional information during the coding process, which is embedded into the image part or into the auxiliary information of the elementary video bit stream in order to be invisible, e.g. by watermarking.

Informative references

Attention is drawn to the following places, which may be of interest for search:

Generation or processing of content or additional data for video distribution by content creator independently of the distribution process; Content for video distribution per se	H04N 21/80
Generation of protective data involving watermarking as additional data for video distribution	H04N 21/8358
Circuits or arrangements for control or supervision between transmitter and receiver, e.g. display, printing, storage or transmission of additional information in scanning, transmission or reproduction of documents or the like	H04N 1/32

H04N 19/48

Methods or arrangements for coding, decoding, compressing or decompressing digital video signals using compressed domain processing techniques other than decoding, e.g. modification of transform coefficients, variable length coding [VLC] data or run-length data

Definition statement

This subgroup covers:

Details of compressed domain processing techniques other than decoding, e.g. modification of transform coefficients, of VLC data or of run-length data, filtering in the compressed domain.

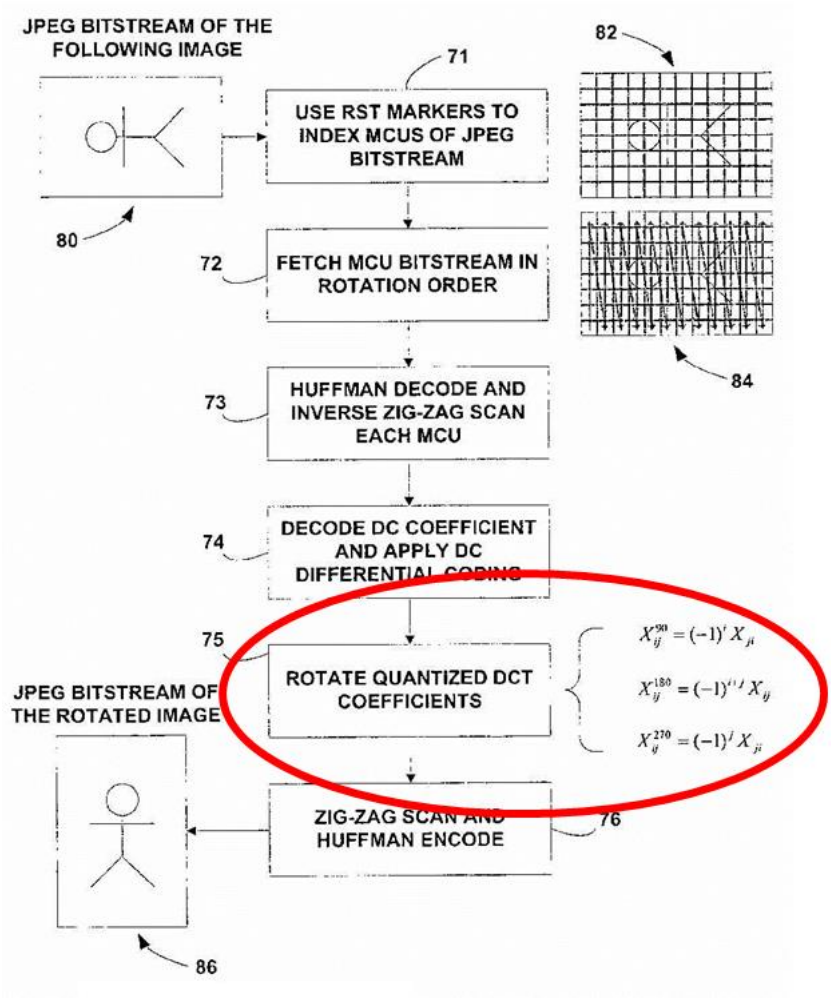

References relevant to classification in this subgroup

This subgroup does not cover:

Motion estimation in a transform domain	H04N 19/547
Processing of decoded motion vectors	H04N 19/513

H04N 19/50

Methods or arrangements for coding, decoding, compressing or decompressing digital video signals using predictive coding

Definition statement

This subgroup covers:

Predictive digital video coding techniques not otherwise provided in other subgroups.

References relevant to classification in this subgroup

This subgroup does not cover:

Transform coding (constitutes a significant non trivial detail) used in combination with predictive coding	H04N 19/61

H04N 19/503

involving temporal prediction

Definition statement

This subgroup covers:

- Predictive digital video coding techniques involving temporal prediction not otherwise provided in other subgroups.
- Details of temporal prediction are classified here.

References relevant to classification in this subgroup

This subgroup does not cover:

Adaptive coding with adaptive selection between spatial and temporal predictive coding	H04N 19/107
Adaptive coding with adaptive selection among a plurality of temporal predictive coding modes	H04N 19/109

H04N 19/507

using conditional replenishment

Definition statement

This subgroup covers:

- Temporal predictive coding using conditional replenishment, i.e. transmitting only a portion of a picture, in which a change has been detected with respect to the corresponding co-located portion of the immediately previous picture.
- Conditional replenishment may be seen also as motion compensated temporal predictive encoding, using only skipping or transmission with zero motion vector.

H04N 19/51

Motion estimation or motion compensation

Definition statement

This subgroup covers:

- Details of disparity estimation and compensation in stereoscopic or multi-view video coding are also covered in this subgroup and in its subgroups. For a synopsis of motion estimation techniques in video coding, see the figure below.

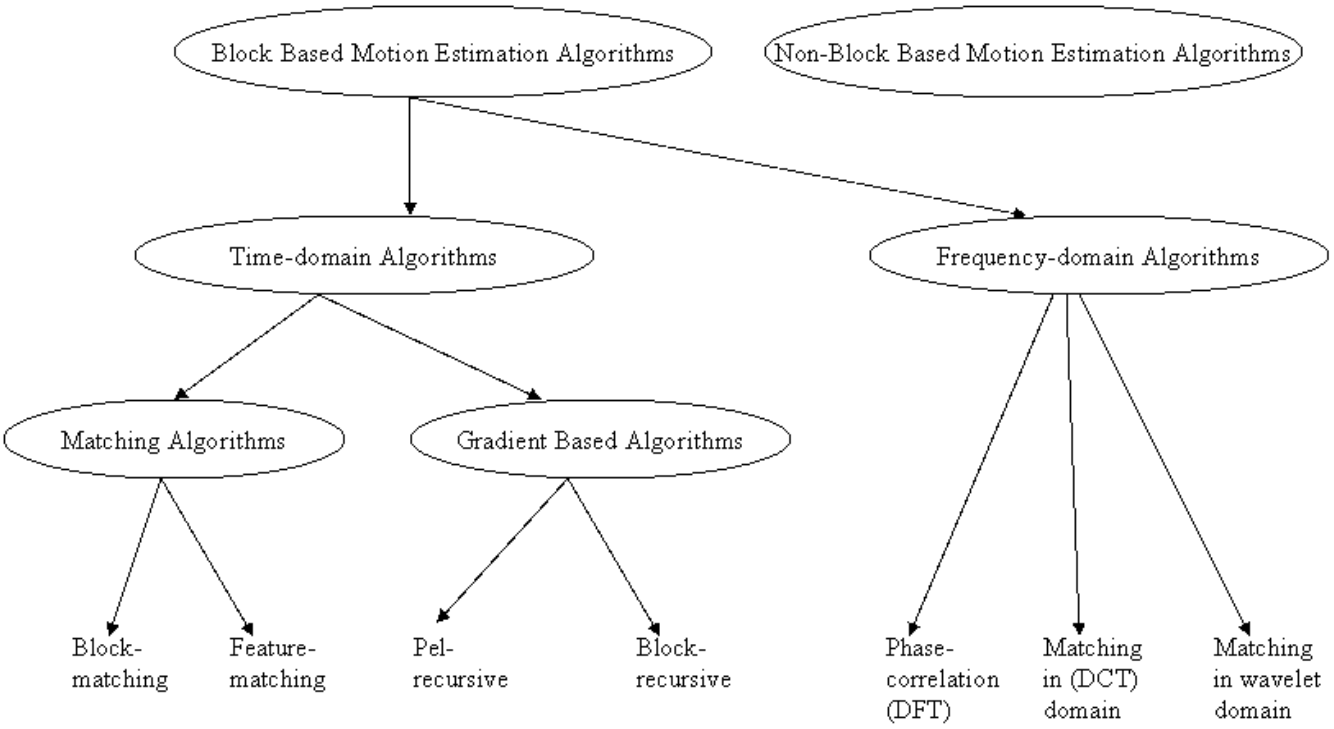

Informative references

Attention is drawn to the following places, which may be of interest for search:

Picture signal circuitry for video frequency region, e.g. for movement detection in television systems not related to digital video coding	H04N 5/14
Conversion of standards for analogue television systems, e.g. at pixel level involving interpolation processes involving the use of motion vectors	H04N 7/01
Analysis of motion by image analysis in general	G06T 7/20

Glossary of terms

In this subgroup and in its subgroups, the following terms (or expressions) are used with the meaning indicated:

Motion vector	A two-dimensional vector used for inter prediction that provides an offset from the coordinates in the decoded picture to the coordinates in a reference picture.
Global motion estimation	Process to estimate the part of motion in a video sequence caused by camera motion, e.g. background motion by panning or zooming.

Multiresolution motion estimation	Motion estimation performed on the same picture of a video sequence at different spatial sampling resolutions (coarse-to-fine: starting from the lowest resolution; fine-to-coarse: starting from the highest resolution).
Block-based matching motion estimation	Classic motion estimation based on the search of a best matching block in a reference frame.
Occlusion	A part of background or of a foreground object that is hidden in one frame and then uncovered in a following frame.
(Motion) Search window	A region in a reference frame, where the search for the block or feature best matching the current block or feature is performed.

Synonyms and Keywords

In patent documents the following abbreviations are often used:

MV	Motion Vector
GMV	Global Motion Vector
MAE	Mean Absolute Error
MAD	Mean Absolute Difference
SAD	Sum of Absolute Differences
MSE	Mean Squared Error
CCF	Cross-Correlation Function
PDC	Pixel Difference Classification
DFD	Displaced Frame Difference

In patent documents the following expressions "reference frame" and "anchor frame" are often used as synonyms.

H04N 19/513

Processing of motion vectors

Definition statement

This subgroup covers:

- Subject matter wherein the determined or existing motion vectors are subjected to further processing or modification, e.g. scaling of motion vectors for scalability or transcoding purposes, encoding of motion vectors, reducing or dropping of motion vectors.

- Motion vector coding and predictive coding is covered in the subgroups.

Informative references

Attention is drawn to the following places, which may be of interest for search:

Processing of encoding parameters different from motion vectors	H04N 19/46

H04N 19/567

Motion estimation based on rate distortion criteria

Informative references

Attention is drawn to the following places, which may be of interest for search:

Rate distortion as a criterion for adaptive coding	H04N 19/147

H04N 19/573

Motion compensation with multiple frame prediction using two or more reference frames in a given prediction direction

Definition statement

This subgroup covers:

Uni-directional or bi-directional motion compensation with more than one reference frame per direction

Glossary of terms

In these subgroups, the following terms (or expressions) are used with the meaning indicated:

Bi-directional motion frame interpolation	Temporal interpolation where a frame is predicted as a function both of a preceding anchor frame and of a succeeding anchor frame, e.g. by averaging.

H04N 19/577

Motion compensation with bidirectional frame interpolation, i.e. using B-pictures

Definition statement

This subgroup covers:

Bi-directional motion compensation with one or more than one reference frame per direction

Glossary of terms

In these subgroups, the following terms (or expressions) are used with the meaning indicated:

Bi-directional motion frame interpolation	Temporal interpolation where a frame is predicted as a function both of a preceding anchor frame and of a succeeding anchor frame, e.g. by averaging.

H04N 19/58

Motion compensation with long-term prediction, i.e. the reference frame for a current frame not being the temporally closest one

Definition statement

This subgroup covers:

Prediction of a frame (P_{pred}) from an anchor frame (P_{anc}) that is not the closest anchor frame preceding or succeeding the frame to be predicted, cf. figure.

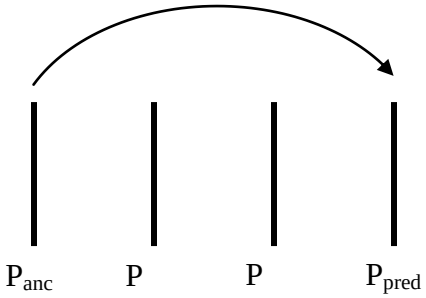

References relevant to classification in this subgroup

This subgroup does not cover:

Video object coding with coding of regions that are present throughout a whole video segment, e.g. sprites, background or mosaic	H04N 19/23

H04N 19/587

involving temporal sub-sampling or interpolation, e.g. decimation or subsequent interpolation of pictures in a video sequence

Definition statement

This subgroup covers:

Sub-sampling or interpolation in the temporal domain during digital video compression or decompression.

Informative references

Attention is drawn to the following places, which may be of interest for search:

Conversion of standards for analogue television systems, at pixel level involving interpolation processes	H04N 7/01
Adaptive sampling for adaptive digital video coding	H04N 19/132
Video compression using hierarchical techniques in the temporal domain	H04N 19/31

H04N 19/59

involving spatial sub-sampling or interpolation, e.g. alteration of picture size or resolution

Definition statement

This subgroup covers:

- Sub-sampling or interpolation in the spatial domain during digital video compression or decompression.

- Details of sub-sampling or interpolation operations during motion estimation and compensation with sub-pixel accuracy are also covered here.

Informative references

Attention is drawn to the following places, which may be of interest for search:

Adaptive sampling for adaptive digital video coding	H04N 19/132
Video compression using hierarchical techniques in the spatial domain	H04N 19/33
Motion estimation or motion compensation with sub-pixel accuracy	H04N 19/523
Conversion of standards for analogue television systems, at pixel level involving interpolation processes	H04N 7/01
Scaling the whole image or part thereof, e.g. by interpolation based image scaling	G06T 3/40

H04N 19/593

involving spatial prediction techniques

Definition statement

This subgroup covers:

Digital video compression involving spatial prediction techniques, e.g. details of intra prediction.

References relevant to classification in this subgroup

This subgroup does not cover:

Adaptive coding with adaptive selection between spatial and temporal predictive coding	H04N 19/107
Adaptive coding with adaptive selection among a plurality of spatial predictive coding modes	H04N 19/11

H04N 19/597

specially adapted for multi-view video sequence encoding

Definition statement

This subgroup covers:

Details of stereoscopic or multi-view digital video coding including processing (e.g. compression) of depth maps.

Informative references

Attention is drawn to the following places, which may be of interest for search:

Motion estimation or compensation, e.g. details of vector based interview estimation and compensation.	H04N 19/51

H04N 19/60

Methods or arrangements for coding, decoding, compressing or decompressing digital video signals using transform coding

Informative references

Attention is drawn to the following places, which may be of interest for search:

Fourier, Walsh or analogous domain transformations in general, e.g. implementation details of DCT or wavelet transforms	G06F 17/14

Synonyms and Keywords

In patent documents the following abbreviations are often used:

DCT	Discrete Cosine Transform
KLT	Karhunen-Loève Transform
DST	Discrete Sine Transform
FFT	Fast Fourier Transform
WLT	Wavelet Transform
MCTF	Motion Compensated Temporal Filtering
EZW	Embedded Zerotrees of Wavelets

In patent documents the following expressions "discrete cosine transform" and "cosine transform" are often used as synonyms.

H04N 19/619

{the transform being operated outside the prediction loop}

Definition statement

This subgroup covers:

Transform based predictive video coders of the type displayed in the figure below, i.e. where the transform is operated before or after the prediction loop.

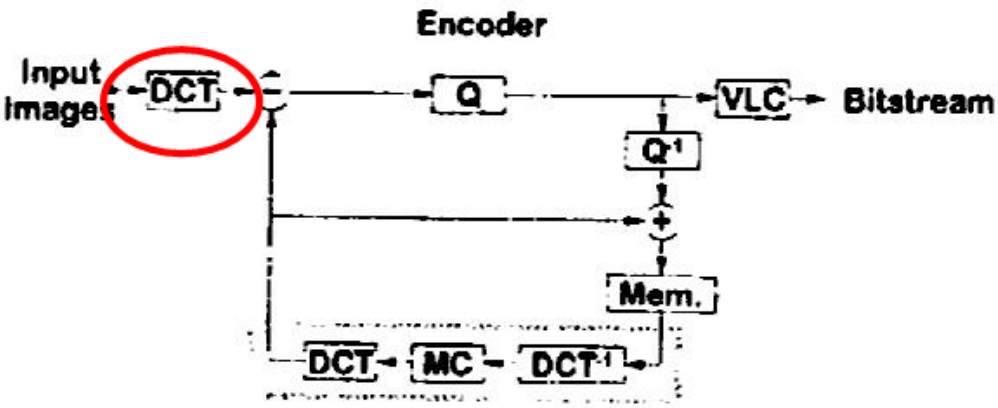

H04N 19/635

characterised by filter definition or implementation details

Informative references

Attention is drawn to the following places, which may be of interest for search:

Implementation details or hardware specially adapted for video compression or decompression	H04N 19/42

H04N 19/65

Methods or arrangements for coding, decoding, compressing or decompressing digital video signals using error resilience

Definition statement

This subgroup covers:

Techniques applied at the level of encoding the elementary video stream for the purpose of increasing the error resilience thereof.

Informative references

Attention is drawn to the following places, which may be of interest for search:

Coding, decoding or code conversion, e.g for error correction in general	H03M 13/00
Arrangements for detecting or preventing errors in the information received, e.g. preventing errors by adapting the channel coding	H04L1/00
Systems for detection or correction of transmission errors in the transmission of television signals using pulse code modulation	H04N 19/89
Selective content distribution, e.g. error resilience techniques for storage at video servers or for channel coding adapted to video distribution	H04N 21/00
Channel coding of digital bit-stream for video distribution	H04N 21/2383

Glossary of terms

In this subgroup, the following terms (or expressions) are used with the meaning indicated:

Resynchronisation marker	A special Variable Length Coding binary word inserted to allow re-initialisation of VLC decoding, which is forced by the marker.
Reversible Variable Length Coding	VLC allowing backward decoding of the stream, i.e. decoding of a VLC coded binary string starting from the end to the beginning.

Synonyms and Keywords

In patent documents the following abbreviations are often used:

Resync marker	Resynchronisation marker
RVLC	Reversible Variable Length Coding
UEP	Unequal Error Protection

H04N 19/70

Methods or arrangements for coding, decoding, compressing or decompressing digital video signals characterised by syntax aspects related to video coding, e.g. related to compression standards

Definition statement

This subgroup covers:

Subject matter wherein details about standards related coding syntax or about using the syntax in the coding process are provided, e.g. H.264 supplemental enhancement information [SEI], headers definitions, details of elementary stream parsing.

Glossary of terms

In this subgroup, the following terms (or expressions) are used with the meaning indicated:

Syntax	The definition of the binary codes and values that make up a conforming elementary video bit stream.
Semantics	The definition of the meaning of the syntax and of the process flow for decoding the syntax elements to produce the digital video output.
Profile/Level	Operational level of a standard compliant decoder, which uses a predefined subset of the features defining the complete decoder according to the standard. The definition of the predefined subset falls also within the prescriptions of the standard.

H04N 19/80

Details of filtering operations specially adapted for video compression, e.g. for pixel interpolation (H04N 19/635, H04N 19/86 take precedence)

Definition statement

This subgroup covers:

Subject matter wherein a filtering operation specifically adapted to video compression is included but not necessarily adaptive in the video compression or decompression process, with details of the filtering operation provided.

References relevant to classification in this subgroup

This subgroup does not cover:

Filter definition or implementation for sub-band based transform	H04N 19/635
Filtering for removal of coding artifacts	H04N 19/86

Informative references

Attention is drawn to the following places, which may be of interest for search:

Adaptive filtering operation	H04N 19/117
Pre-processing or post-processing specially adapted for video compression	H04N 19/85
Image filtering for image enhancement or restoration using local operators	G06T 5/20
Impedance networks, e.g. resonant circuits, filters in general	H03H

H04N 19/82

involving filtering within a prediction loop

Definition statement

This subgroup covers:

- The insertion of the filtering within a prediction loop and details of such filter.

- This subgroup is of relevance, only if it contributes to define non trivial details of the filtering operation as in-loop filtering, regardless whether the filtering is adapted in the sense of H04N 19/117 or not.

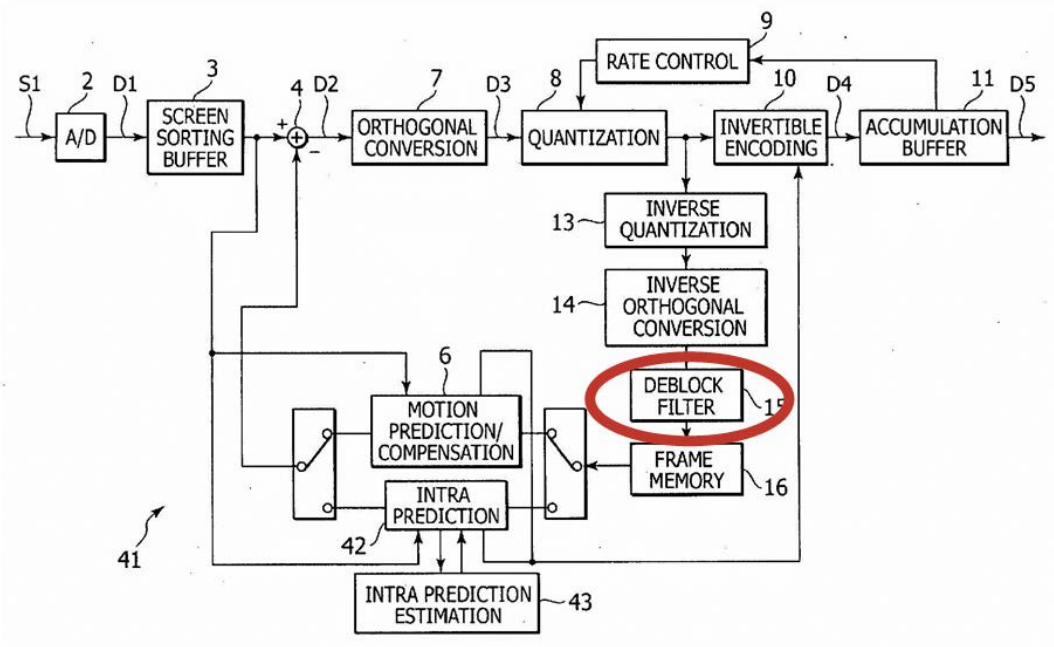

Informative references

Attention is drawn to the following places, which may be of interest for search:

Adaptive filtering operation	H04N 19/117
Filter definition or implementation for sub-band based transform	H04N 19/635

H04N 19/85

using pre-processing or post-processing specially adapted for video compression

Definition statement

This subgroup covers:

- Subject matter wherein the pre or post processing operation is present as a functional block but not necessarily adaptive in the video coding process, e.g. the pre or post processing is respectively performed prior to the input of, or after the output of, the video coding process.

- This subgroup is of relevance, only if the subject-matter to be classified contributes to define non trivial details of pre- or post-processing, regardless whether the filtering is adapted in the sense of H04N 19/117 or not.

Informative references

Attention is drawn to the following places, which may be of interest for search:

In-loop filtering	H04N 19/82

H04N 19/86

involving reduction of coding artifacts, e.g. of blockiness

Definition statement

This subgroup covers:

Processing techniques (e.g. filtering or interpolation in the spatial or in the temporal domain) adapted to reduce artefacts caused by digital video compression, e.g. blockiness from block-based transform compression, frame freeze or jerkiness from dropping frames at compression or transmission, false contours from limited bit depth resolution.

Informative references

Attention is drawn to the following places, which may be of interest for search:

Circuitry for suppressing or minimising disturbance (e.g. moiré, halo) in television systems	H04N 5/21
In-loop filtering	H04N 19/82
Filtering or interpolation as an error concealment technique	H04N 19/895

H04N 19/87

involving scene cut or scene change detection in combination with video compression

Informative references

Attention is drawn to the following places, which may be of interest for search:

Picture signal circuitry for video frequency region, e.g. circuitry for scene change detection in television systems.	H04N 5/14
Scene cut detection in adaptive video coding	H04N 19/142

H04N 19/88

involving rearrangement of data among different coding units, e.g. shuffling, interleaving, scrambling or permutation of pixel data or permutation of transform coefficient data among different blocks

Definition statement

This subgroup covers:

Techniques for the rearrangement of data among different coding units at the level of a single elementary video stream within the operation of the video coder, e.g. shuffling, interleaving, scrambling, permutation of pixel data or permutation of transform coefficient data among different blocks.

Informative references

Attention is drawn to the following places, which may be of interest for search:

Analogue secrecy systems in television systems	H04N 7/16
Adaptive scanning of coding units	H04N 19/129
Processing of video elementary streams for video distribution involving video stream encryption at the transmitter side	H04N 21/2347
Processing of video elementary streams involving video stream decryption	H04N 21/4405
Processing of video elementary streams involving video stream encryption at the receiver side	H04N 21/4408

H04N 19/89

involving methods or arrangements for detection of transmission errors at the decoder

Definition statement

This subgroup covers:

- Techniques for detecting transmission errors at the digital video decoder and at the level of the elementary video stream.
- The subgroup H04N 19/895 covers details of detection in combination with error concealment.

Informative references

Attention is drawn to the following places, which may be of interest for search:

Coding, decoding or code conversion for error detection or error correction in general	H03M 13/00
Decoders specifically adapted for coding, decoding, compressing or decompressing digital video signals	H04N 19/44
Methods or arrangements, for coding, decoding, compressing or decompressing digital video signals using error resilience	H04N 19/65
Interfacing the downstream path of the transmission network originating from a server, e.g. channel decoding in selective content distribution	H04N 21/438
Monitoring of processes or resources, e.g. of downstream path of the transmission network at the receiver side	H04N 21/442
Monitoring of client processing errors or hardware failure in selective video distribution	H04N 21/4425
Control signalling between network components and server or clients, e.g. monitoring network process errors by the network	H04N 21/647

H04N 19/90

Methods or arrangements for coding, decoding, compressing or decompressing digital video signals using coding techniques not provided for in groups H04N 19/10 - H04N 19/85, e.g. fractals

References relevant to classification in this subgroup

Places in relation to which this subgroup is residual:

Methods or arrangements~~,~~ for coding, decoding, compressing or decompressing digital video signals using adaptive coding	H04N 19/10
using video object coding	H04N 19/20
using hierarchical techniques, e.g. scalability	H04N 19/30
using video transcoding	H04N 19/40
Implementation details or hardware specially adapted for video compression or decompression	H04N 19/42
Decoders specifically adapted for coding, decoding, compressing or decompressing digital video signals	H04N 19/44
Embedding additional information in the video signal during the compression process	H04N 19/46
using compressed domain processing techniques other than decoding	H04N 19/48
using predictive coding	H04N 19/50
using transform coding	H04N 19/60
using error resilience	H04N 19/65
characterised by syntax aspects related to video coding	H04N 19/70
Details of filtering operations specially adapted for video compression	H04N 19/80
Pre-processing or post-processing specially adapted for video compression	H04N 19/85

H04N 19/91

Entropy coding, e.g. variable length coding [VLC], arithmetic coding

Definition statement

This subgroup covers:

Subject matter wherein the entropy coding is especially adapted to video compression, e.g. specifics of table entries for fixed and variable length coding, details of MPEG Huffman coding, details of H.264 arithmetic coding.

Informative references

Attention is drawn to the following places, which may be of interest for search:

Conversion to or from variable length codes in general	H03M 7/40
Adaptive entropy coding, e.g. adaptive variable length coding [AVLC] or context adaptive binary arithmetic coding [CABAC]	H04N 19/13
Run-length coding for video compression	H04N 19/93

Synonyms and Keywords

In patent documents the following abbreviations are often used:

VLC	Variable Length Coding

H04N 19/93

Run-length coding

Definition statement

This subgroup covers:

- Subject matter wherein the run-length coding is especially adapted to video compression.
- In run-length coding a run, i.e. a sequence of identical data values, is coded by a representation of the data value together with the length of the sequence.

Informative references

Attention is drawn to the following places, which may be of interest for search:

Conversion to or from run-length codes in general	H03M 7/46
Variable length coding in an adaptive video coding process	H04N 19/13

Synonyms and Keywords

In patent documents the following abbreviations are often used:

RLE	Run-Length Encoding

H04N 19/94

Vector quantisation

Definition statement

This subgroup covers:

Video compression using vector quantisation, i.e. by dividing a large set of points into groups (vectors) having approximately the same number of points closest to them and by representing each group by a single code, which is associated with its centroid point.

Informative references

Attention is drawn to the following places, which may be of interest for search:

Compression in general, e.g. vector coding	H03M 7/30

Synonyms and Keywords

In patent documents the following abbreviations are often used:

VQ	Vector Quantisation

H04N 19/96

Tree coding, e.g. quad-tree coding.

Definition statement

This subgroup covers:

- Video compression using tree coding.
- Two-dimensional tree coding is called quad-tree coding and is performed by partitioning an image or a video frame by recursively subdividing it into four quadrants or regions, until each region may be represented by a single colour or code word, and coding the resulting tree data structure in which each internal node has exactly four children and each termination node (leaf) corresponds to a resulting region with the colour or code word associated to it, cf. R. Finkel and J.L. Bentley (1974). “Quad Trees: A Data Structure for Retrieval on Composite Keys”. *Acta Informatica* **4** (1): 1–9.
- Tree coding in higher dimension is defined correspondingly (e.g. octree, performed in three-dimensions by subdivision into eight volumetric regions).

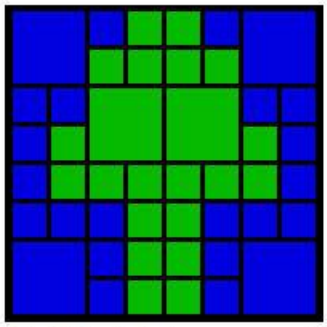

8 x 8 pixel picture represented in a quad tree

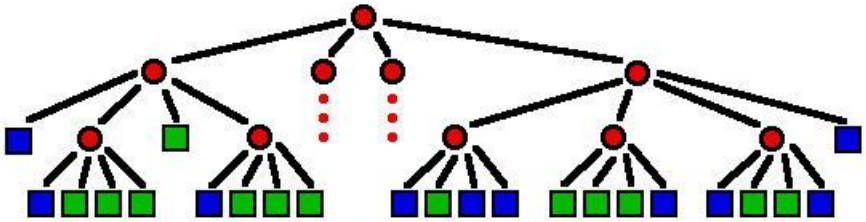

The quad tree of the above example picture. The quadrants are shown in counterclockwise order from the top-right quadrant. The root is the top node. (The 2nd and 3rd quadrants are not shown.)

Informative references

Attention is drawn to the following places, which may be of interest for search:

Image coding using tree coding, e.g. quadtree, octree	G06T 9/40

H04N 19/97

Matching pursuit coding

Definition statement

This subgroup covers:

Video compression using matching pursuit coding, cf. G. Mallat and Z. Zhang, "Matching Pursuits with Time-Frequency Dictionaries", IEEE Transactions on Signal Processing, December 1993, pp. 3397–3415.

Synonyms and Keywords

In patent documents the following abbreviations are often used:

MP	Matching Pursuit

H04N 19/98

Adaptive-dynamic-range coding [ADRC]

Definition statement

This subgroup covers:

- Video compression using adaptive-dynamic-range coding, cf. Kondo et al., "Adaptive dynamic range coding scheme for future HDTV digital VTR", Proceedings of Signal Processing of HDTV, III. Fourth International Workshop on HDTV and Beyond, Turin, Italy, 4-6 Sept. 1991, p. 43-50.

The term "adaptive" in the "Adaptive-Dynamic-Range Coding" refers to the dynamic range being adaptive and not to the coding being adaptive, which is covered by H04N 19/10 and subgroups.

4,487

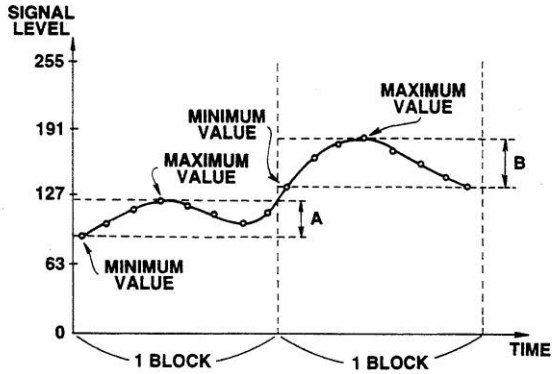

T)

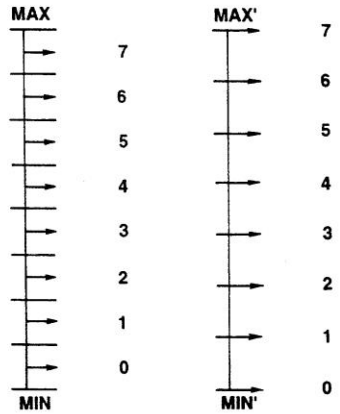

Synonyms and Keywords

In patent documents the following abbreviations are often used:

ADRC	Adaptive-Dynamic-Range Coding

H04N 19/99

{involving fractal coding}

Definition statement

This subgroup covers:

- Lossy video compression using fractal algorithms, as described in Y. Fisher, D. N. Rogovin and T.-P. J. Shen, “Fractal (Self-VQ) Encoding of Video Sequences”, Proc. of the Conference on Visual Communications and Image Processing ‘94, Chicago, IL, USA, 25-29 Sept. 1994, SPIE, vol. 2308, p.1359-1370 (1994).

Informative references

Attention is drawn to the following places, which may be of interest for search:

Methods for coding digital video signals using vector quantisation	H04N 19/94